Form No. 3365-305 Rev C

TORO®

Count on it.

Operator's Manual

STX-26 Stump Grinder

Model No. 23210—Serial No. 310000001 and Up

Model No. 23210G—Serial No. 310000001 and Up

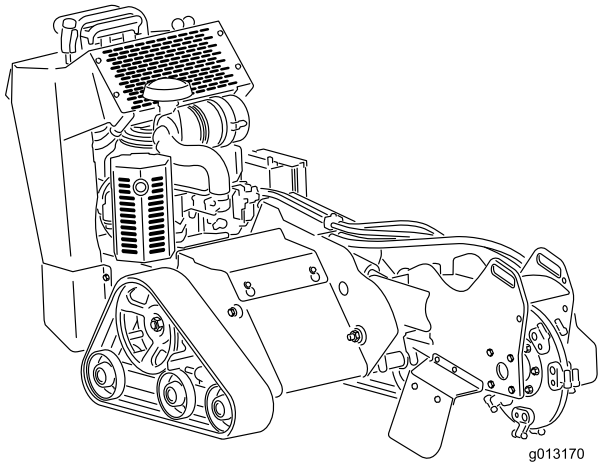

WARNING

CALIFORNIA
Proposition 65 Warning

This product contains a chemical or chemicals known to the State of California to cause cancer, birth defects, or reproductive harm.

The engine exhaust from this product contains chemicals known to the State of California to cause cancer, birth defects, or other reproductive harm.

Use of this product may cause exposure to chemicals known to the State of California to cause cancer, birth defects, or other reproductive harm.

⚠ DANGER

There may be buried power, gas, and/or telephone lines in the work area. Shock or explosion may occur if you dig into them.

Have the property or work area marked for buried lines and do not dig in marked areas. Contact your local marking service or utility company to have the property marked (for example, in the United States, call 811 for the nationwide marking service).

This spark ignition system complies with Canadian ICES-002.

Because in some areas there are local, state, or federal regulations requiring that a spark arrester be used on the engine of this machine, a spark arrester is available as an option. If you require a spark arrestor, contact your Authorized Toro Service Dealer.

Genuine Toro spark arresters are approved by the USDA Forestry Service.

Important: It is a violation of California Public Resource Code Section 4442 to use or operate the engine on any forest-covered, brush-covered, or grass-covered land without a spark arrester muffler maintained in working order, or the engine constricted, equipped, and maintained for the prevention of fire. Other states or federal areas may have similar laws.

The enclosed *Engine Owner's Manual* is supplied for information regarding the US Environmental Protection Agency (EPA) and the California Emission Control Regulation of emission systems, maintenance, and warranty. Replacements may be ordered through the engine manufacturer.

© 2012—The Toro® Company
8111 Lyndale Avenue South
Bloomington, MN 55420

Contact us at www.Toro.com.
Printed in the USA.
All Rights Reserved

Introduction

This machine is designed to grind and remove tree stumps and surface roots. It is not intended to cut rock or any other material other than wood and the soil around a stump.

Read this information carefully to learn how to operate and maintain your product properly and to avoid injury and product damage. You are responsible for operating the product properly and safely.

You may contact Toro directly at www.Toro.com for product and accessory information, help finding a dealer, or to register your product.

Whenever you need service, genuine Toro parts, or additional information, contact an Authorized Service Dealer or Toro Customer Service and have the model and serial numbers of your product ready. Figure 1 illustrates the location of the model and serial numbers on the product. Write the numbers in the space provided.

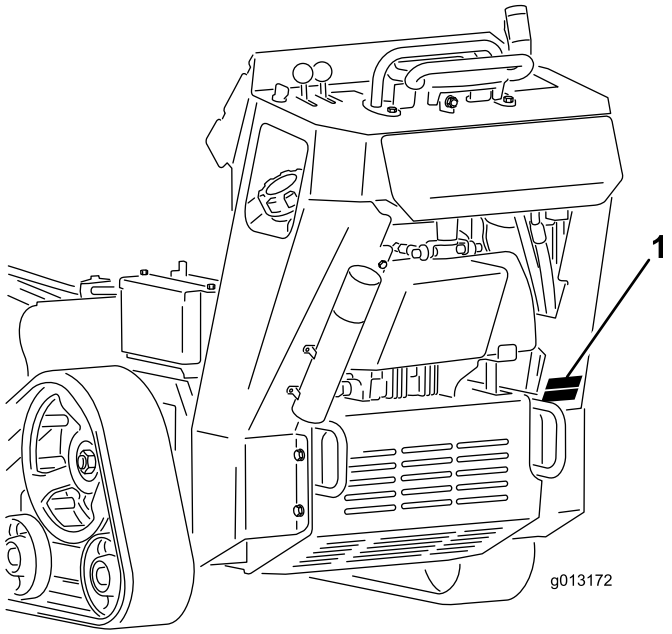

Figure 1

1. Model and serial number plate

Model No. _____

Serial No. _____

This manual identifies potential hazards and has safety messages identified by the safety alert symbol (Figure 2), which signals a hazard that may cause serious injury or death if you do not follow the recommended precautions.



Figure 2

1. Safety alert symbol

This manual uses 2 other words to highlight information. **Important** calls attention to special mechanical information and **Note** emphasizes general information worthy of special attention.

Contents

Introduction 3
Safety 4
- Safe Operating Practices 4
- Slope Indicator 7
- Safety and Instructional Decals 8

Setup 11
- 1 Installing the Grinder Control Lever 11
- 2 Checking Fluid Levels 11
- 3 Charging the Battery 11

Product Overview 12
- Controls 12
- Specifications 14
- Attachments/Accessories 14

Operation 15
- Adding Fuel 15
- Checking the Engine Oil Level 16
- Checking the Hydraulic Fluid Level 16
- Starting and Stopping the Engine 17
- Stopping the Machine 18
- Moving a Non-functioning Machine 18
- Grinding a Stump 18
- Securing the Machine for Transport 19
- Lifting the Machine 19
- Operating Tips 19

Maintenance 21
- Recommended Maintenance Schedule(s) 21
- Premaintenance Procedures 21
  - Removing the Cover Plate 22
  - Installing the Cover Plate 22
  - Removing the Bottom Shield 22
  - Installing the Bottom Shield 22
- Lubrication 23
  - Greasing the Machine 23
- Engine Maintenance 23
  - Servicing the Air Cleaner 23
  - Servicing the Engine Oil 24

Servicing the Spark Plug 25
Fuel System Maintenance 27
Draining the Fuel Tank 27
Replacing the Fuel Filter 27
Electrical System Maintenance 28
Servicing the Battery 28
Replacing the Fuses 30
Drive System Maintenance 30
Servicing the Tracks 30
Belt Maintenance 33
Replacing the Pump Drive Belt 33
Controls System Maintenance 33
Adjusting the Traction Control Alignment 33
Adjusting the Traction Control Neutral Position 35
Adjusting the Tracking of the Traction Control, Full Forward Position 35
Hydraulic System Maintenance 35
Replacing the Hydraulic Filter 35
Changing the Hydraulic Fluid 35
Checking the Hydraulic Lines 37
Grinder Maintenance 37
Replacing the Teeth 37
Cleaning 38
Removing Debris from the Machine 38
Storage 38
Troubleshooting 40
Schematics 41

Safety

Improper use or maintenance by the operator or owner can result in injury. To reduce the potential for injury, comply with these safety instructions and always pay attention to the safety alert symbol ⚠, which means: *Caution*, *Warning*, or *Danger*—personal safety instruction. Failure to comply with the instruction may result in personal injury or death.

Safe Operating Practices

This product is capable of amputating hands and feet. Always follow all safety instructions to avoid serious injury or death.

⚠ WARNING

Engine exhaust contains carbon monoxide, an odorless, deadly poison that can kill you.

Do not run the engine indoors or in an enclosed area.

Training

- Read the *Operator's Manual* and other training material. If the operator(s) or mechanic(s) can not read English, it is the owner's responsibility to explain this material to them.
- Become familiar with the safe operation of the equipment, operator controls, and safety signs.
- All operators and mechanics should be trained. The owner is responsible for training the users.
- Never let children or untrained people operate or service the equipment. Local regulations may restrict the age of the operator.
- The owner/user can prevent and is responsible for accidents or injuries occurring to himself or herself, other people or property.

Preparation

- Evaluate the terrain to determine what accessories and attachments are needed to properly and safely perform the job. Only use accessories and attachments approved by the manufacturer.
- Wear appropriate clothing including hard hat, safety glasses, long pants, safety shoes, and hearing protection. Long hair, loose clothing or jewelry may get tangled in moving parts.
- Inspect the area where the equipment is to be used and remove all objects such as rocks, toys, and wire which can be thrown by the machine.

- Use extra care when handling gasoline and other fuels. They are flammable and vapors are explosive.
  - Use only an approved container
  - Never remove the gas cap or add fuel with the engine running. Allow the engine to cool before refueling. Do not smoke.
  - Never refuel or drain the machine indoors.
- Check that the operator presence controls, safety switches, and shields are attached and functioning properly. Do not operate unless they are functioning properly.

Operation

- Never run an engine in an enclosed area.
- Only operate in good light, keeping away from holes and hidden hazards.
- Be sure all drives are in neutral before starting the engine. Only start the engine from the operator's position.
- Slow down and use extra care on hillsides. Be sure to travel in the recommended direction on hillsides. Turf conditions can affect the machine's stability.
- Slow down and use caution when making turns and when changing directions on slopes.
- Never operate with the guards not securely in place. Be sure all interlocks are attached, adjusted properly, and functioning properly.
- Do not change the engine governor setting or overspeed the engine.
- Stop on level ground, lower the grinder, disengage the hydraulics, and shut off the engine before leaving the operator's position for any reason.
- Keep hands and feet away from the moving grinder wheel and teeth.
- Look behind and down before backing up to be sure of a clear path.
- Never carry passengers and keep pets and bystanders away.
- Slow down and use caution when making turns and crossing roads and sidewalks.
- Do not operate the machine under the influence of alcohol or drugs.
- Use care when loading or unloading the machine into a trailer or truck.
- Use care when approaching blind corners, shrubs, trees, or other objects that may obscure vision.
- Ensure that the area is clear of other people before operating the machine. Stop the machine if anyone enters the area.
- Never leave a running machine unattended. Always lower the grinder, stop the engine, and remove the key before leaving.
- Never jerk the controls; use a steady motion.
- Watch for traffic when operating near or crossing roadways.
- Do not touch parts which may be hot from operation. Allow them to cool before attempting to maintain, adjust, or service.
- Ensure that you operate the machine in areas where there are no obstacles in close proximity to the operator. Failure to maintain adequate distance from trees, walls, and other barriers may result in injury as the machine backs up during operation if the operator is not attentive to the surroundings. Only operate the unit in areas where there is sufficient clearance for the operator to safely maneuver the product.
- Before digging, have the area marked for underground utilities, and do not dig in marked areas.
- Locate the pinch point areas marked on the machine and keep hands and feet away from these areas.
- Lightning can cause severe injury or death. If lightning is seen or thunder is heard in the area, do not operate the machine; seek shelter.

Slope Operation

Slopes are a major factor related to loss-of-control and tip-over accidents, which can result in severe injury or death. All slopes require extra caution.

- Do not operate the machine on hillsides or slopes exceeding the angles recommended in the following table.

Front Facing Uphill	Rear Facing Uphill	Side Facing Uphill
12°	18°	16°

Note: See also the Slope Indicator (page 7).

- **Operate up and down slopes with the front end of the machine uphill.**
- Remove obstacles such as rocks, tree limbs, etc. from the work area. Watch for holes, ruts, or bumps, as uneven terrain could overturn the machine. Tall grass can hide obstacles.
- Use only Toro-approved accessories. Accessories can change the stability and the operating characteristics of the machine. Warranty may be voided if used with unapproved accessories.
- Keep all movements on slopes slow and gradual. Do not make sudden changes in speed or direction.

- Avoid starting or stopping on a slope. If the machine loses traction, proceed slowly, straight down the slope.
- Avoid turning on slopes. If you must turn, turn slowly and keep the heavy end of the machine uphill.
- Do not operate near drop-offs, ditches, or embankments. The machine could suddenly turn over if a track goes over the edge of a cliff or ditch, or if an edge caves in.
- Do not operate on wet grass. Reduced traction could cause sliding.
- Do not park the machine on a hillside or slope without lowering the grinder to the ground and chocking the tracks.

Maintenance and Storage

- Disengage the hydraulics, lower the grinder, stop the engine, and remove the key. Wait for all movement to stop before adjusting, cleaning, or repairing.
- Clean debris from the grinder, drives, mufflers, and engine to help prevent fires. Clean up oil or fuel spillage.
- Let the engine cool before storing and do not store near flame.
- Do not store fuel near flames or drain indoors.
- Park the machine on level ground. Never allow untrained personnel to service the machine.
- Use jack stands to support components when required.
- Carefully release pressure from components with stored energy.
- Disconnect the battery or remove the spark plug wires before making any repairs. Disconnect the negative terminal first and the positive last. Reconnect positive first and negative last.
- Keep hands and feet away from moving parts. If possible, do not make adjustments with the engine running.
- Keep all parts in good working condition and all hardware tightened. Replace all worn or damaged decals.
- Keep nuts and bolts tight. Keep equipment in good condition.
- Never tamper with safety devices.
- Keep the machine free of grass, leaves, or other debris build-up. Clean up oil or fuel spillage. Allow the machine to cool before storing.
- Use extra care when handling gasoline and other fuels. They are flammable and vapors are explosive.
  - Use only an approved container.
  - Never remove the gas cap or add fuel when the engine is running. Allow the engine to cool before refueling. Do not smoke.
  - Never refuel the machine indoors.
  - Never store the machine or fuel container inside where there is an open flame, such as near a water heater or furnace.
  - Never fill a container while it is inside a vehicle, trunk, pick-up bed, or any surface other than the ground.
  - Keep container nozzle in contact with the tank during filling.
- Stop and inspect the equipment if you strike an object. Make any necessary repairs before restarting.
- Use only genuine Toro replacement parts to ensure that original standards are maintained.
- Battery safety:
  - Charge batteries in an open, well ventilated area, away from spark and flames. Unplug the charger before connecting or disconnecting it from the battery. Wear protective clothing and use insulated tools.
  - Battery acid is poisonous and can cause burns. Avoid contact with skin, eyes, and clothing. Protect your face, eyes, and clothing when working with a battery.
  - Battery gases can explode. Keep cigarettes, sparks and flames away from the battery.
- Keep your body and hands away from pin hole leaks or nozzles that eject high pressure hydraulic fluid. Use cardboard or paper to find hydraulic leaks; never use your hands. Hydraulic fluid escaping under pressure can penetrate skin and cause injury requiring surgery within a few hours by a qualified surgeon or gangrene may result.

Slope Indicator

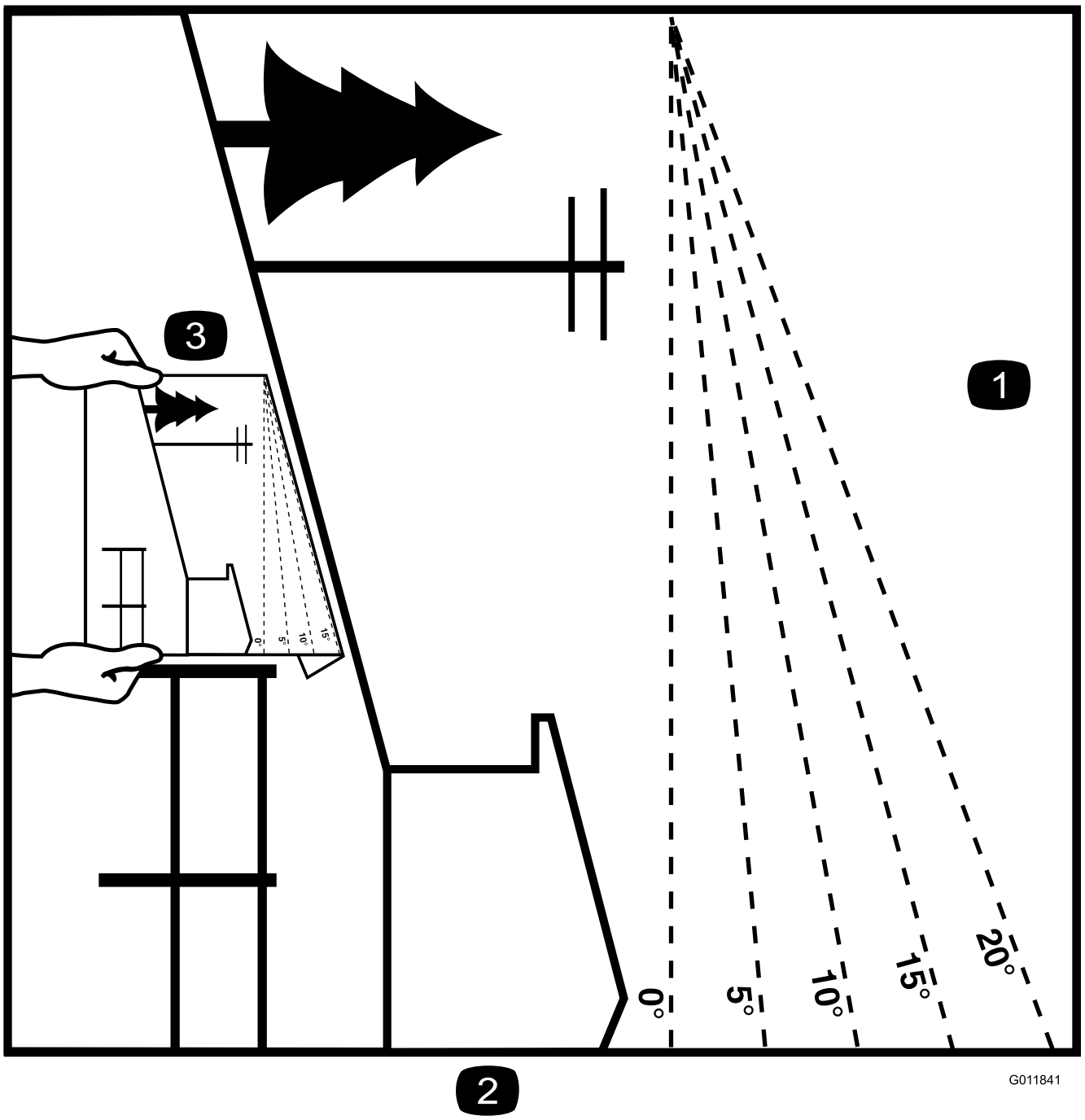

Figure 3

This page may be copied for personal use.

1. To determine the maximum slope you can safely operate the machine on, refer to **Slope Operation (page 5)**. Use the slope indicator to determine the degree of slope of hills before operating. **Do not operate this machine on a slope greater than that specified in Slope Operation (page 5).** Fold along the appropriate line to match the recommended slope.
2. Align this edge with a vertical surface, a tree, building, fence pole, etc.
3. Example of how to compare slope with folded edge.

Safety and Instructional Decals

Safety decals and instructions are easily visible to the operator and are located near any area of potential danger. Replace any decal that is damaged or lost.

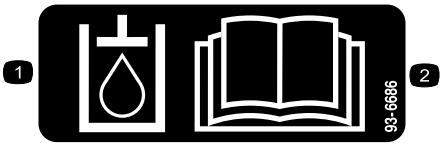

93-6686

1. Hydraulic oil
2. Read the *Operator's Manual.*

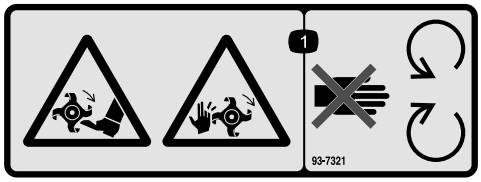

93-7321

1. Cutting/dismemberment hazard of hands and feet, rotating knives/blades—stay away from moving parts.

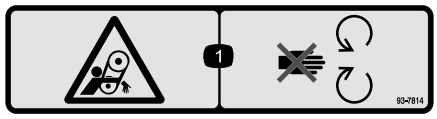

93-7814

1. Entanglement hazard, belt—stay away from moving parts.

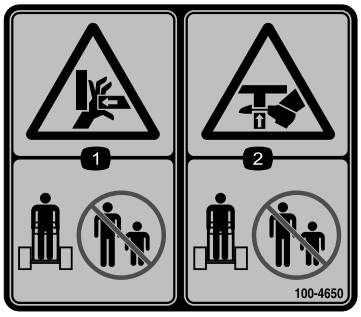

100-4650

1. Crushing hazard of hand—keep bystanders a safe distance from the machine.
2. Crushing hazard of foot—keep bystanders a safe distance from the machine.

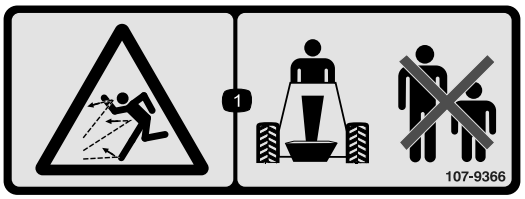

107-9366

1. Thrown object hazard—keep bystanders a safe distance from the machine.

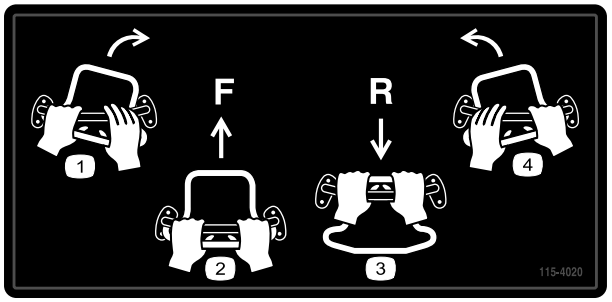

115-4020

1. Turn right
2. Forward
3. Reverse
4. Turn left

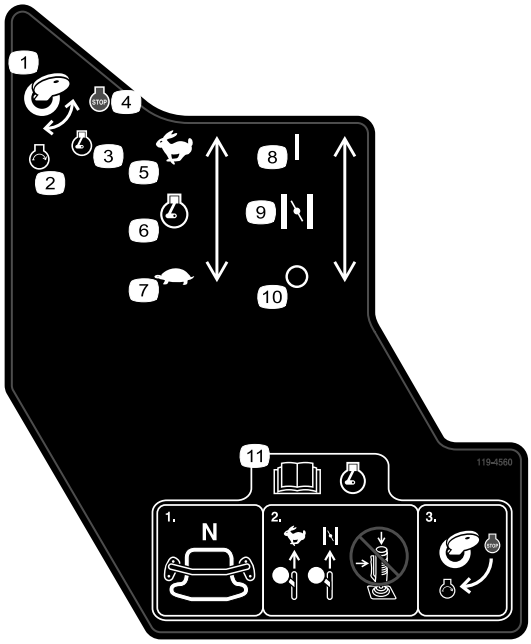

119-4560

1. Ignition key
2. Engine—start
3. Engine—run
4. Engine—stop
5. Fast
6. Engine speed
7. Slow
8. On/Closed
9. Choke
10. Off/Open
11. Read the *Operator's Manual* before starting the engine; place the traction control in Neutral, move the engine speed to Fast and the choke to On/Closed, turn the ignition key to run.

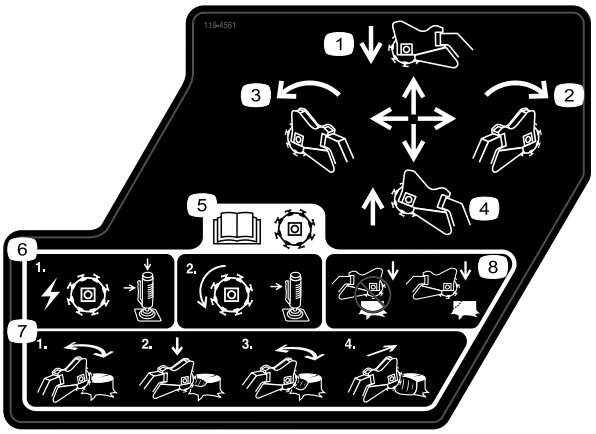

119-4561

1. Read the *Operator's Manual* before operating the cutter; engage the side lever and top button of the joystick to start the cutter blade; continue engaging the side lever to maintain cutter rotation.
2. Lower the cutter head
3. Pivot the cutter head to the right
4. Raise the cutter head
5. Pivot the cutter head to the left



Battery Symbols

Some or all of these symbols are on your battery

1. Explosion hazard
2. No fire, open flame, or smoking.
3. Caustic liquid/chemical burn hazard
4. Wear eye protection
5. Read the *Operator's Manual.*
6. Keep bystanders a safe distance from the battery.
7. Wear eye protection; explosive gases can cause blindness and other injuries
8. Battery acid can cause blindness or severe burns.
9. Flush eyes immediately with water and get medical help fast.
10. Contains lead; do not discard.

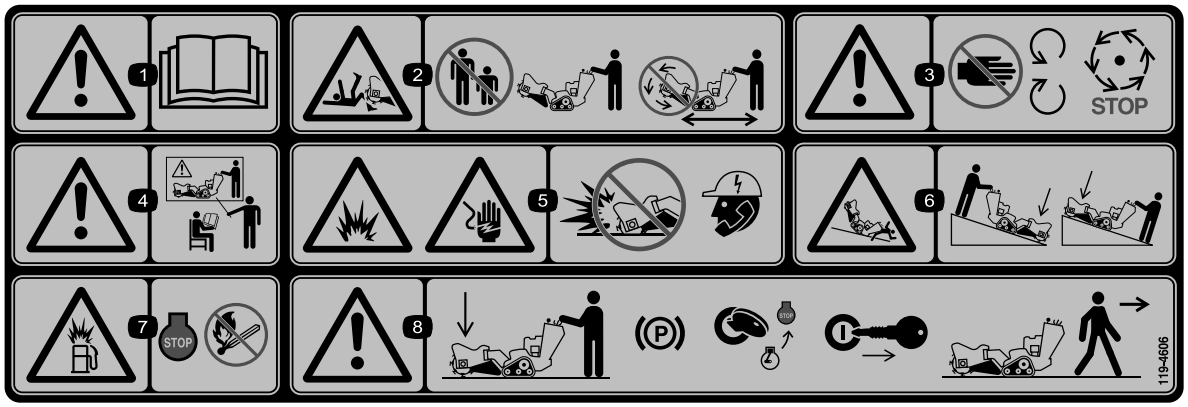

119-4606

1. Warning—read the *Operator's Manual*.
2. Cutting/dismemberment hazard; cutter—keep bystanders a safe distance from the machine; do not operate the cutter head while transporting the machine.
3. Warning—stay away from moving parts; wait for all moving parts to stop.
4. Warning—do not operate this machine unless you are trained.
5. Explosion and electric shock hazard—do not dig in areas with buried utility lines; contact local power organizations before digging.
6. Tipping/crushing hazard—lower the cutter head when operating on slopes.
7. Explosion hazard, fueling—stop the engine and extinguish all flames when fueling.
8. Warning—lower the cutter head, set the parking brake (if applicable), stop the engine, remove the ignition key before leaving the machine.

Setup

Loose Parts

Use the chart below to verify that all parts have been shipped.

Procedure	Description	Qty.	Use
1	Grinder control lever Jam nut	1 1	Install the grinder control lever.
2	No parts required	–	Check the fluid levels.
3	No parts required	–	Charge the battery.

1

Installing the Grinder Control Lever

Parts needed for this procedure:

1	Grinder control lever
1	Jam nut

Procedure

1. Thread the jam nut onto the grinder control lever (Figure 4).

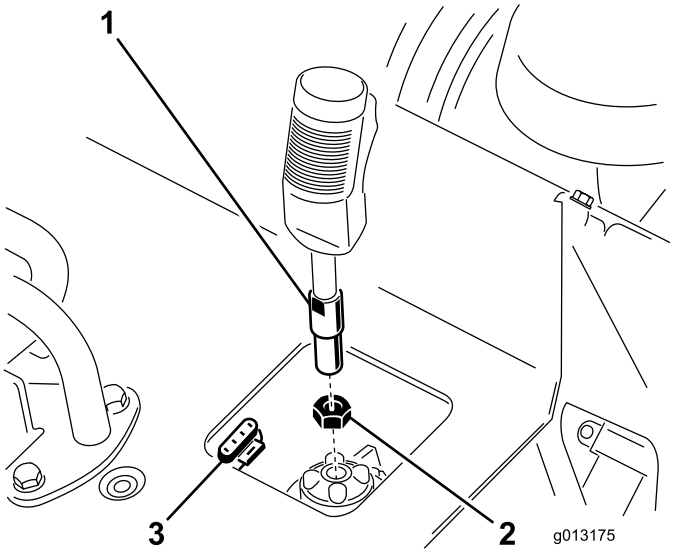

Figure 4

1. Grinder control lever
2. Jam nut
3. 4-pin connector

2. Thread the grinder control lever into the recepticle on the control panel (Figure 4).
3. With the trigger oriented forward, tighten the jam nut against the receptacle to secure the lever in place (Figure 4).
4. Connect the wire on the lever to the 4-pin connector under the control panel (Figure 4).

2

Checking Fluid Levels

No Parts Required

Procedure

Before starting the engine for the first time, check the engine oil and hydraulic fluid levels; refer to Checking the Engine Oil Level (page 16) and Checking the Hydraulic Fluid Level (page 16) for more information.

3

Charging the Battery

No Parts Required

Procedure

Charge the battery; refer to Charging the Battery (page 29) for more information.

Product Overview

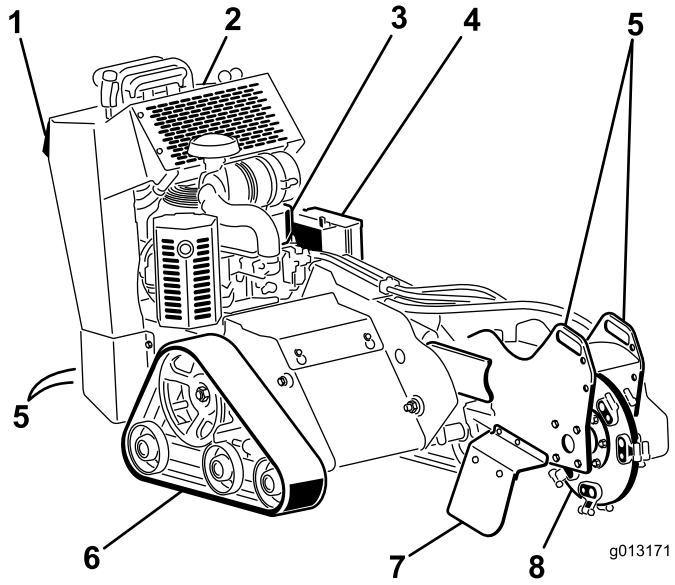

Figure 5

1.	Reverse safety plate	3.	Engine	5.	Tie-down/ lift point	7.	Chip shield
2.	Control panel	4.	Battery	6.	Track	8.	Grinder

Controls

Become familiar with all the controls (Figure 6) before you start the engine and operate the machine.

Figure 6

1. Key switch
2. Throttle lever
3. Choke lever
4. Hour meter
5. Traction control
6. Reference bar
7. Grinder control lever

Key Switch

The key switch has three positions: off, run, and start.

To start the engine, rotate the key to the start position. Release the key when engine starts and it will move automatically to the run position.

To stop the engine, rotate the key to the off position.

Throttle Lever

Move the control forward to increase the engine speed and rearward to decrease speed.

Choke Lever

Before starting a cold engine, move the choke lever forward. After the engine starts, regulate the choke to keep the engine running smoothly. As soon as possible, move the choke lever all the way rearward.

Note: A warm engine requires little or no choking.

Hour Meter

When the engine is off, the hour meter displays the number of hours of operation that have been logged on the machine.

Reference Bar

When driving the machine, use the reference bar as a handle and a leverage point for controlling the traction control. To ensure smooth, controlled operation, do not take both hands off of the reference bar while operating the machine.

Traction Control

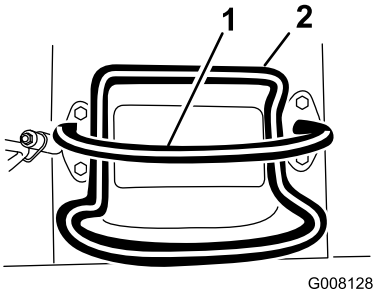

Figure 7

1. Reference bar (does not move to give you a reference point and a fixed handle to hold while operating the traction unit)
2. Traction control (moves to control the machine)

- To move forward, move the traction control forward (Figure 8).

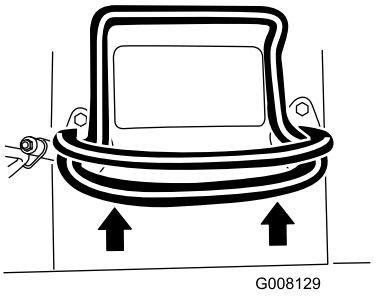

Figure 8

- To move rearward, move the traction control rearward (Figure 9). **When reversing, look behind for obstructions and keep your hands on the reference bar (Figure 7).**

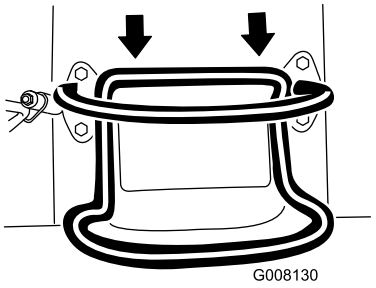

Figure 9

- To turn right, rotate the traction control clockwise (Figure 10).

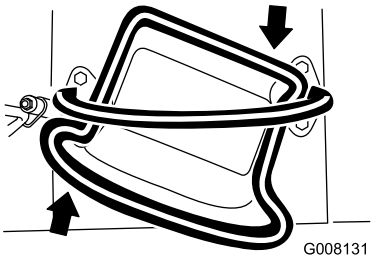

Figure 10

- To turn left, rotate the traction control counterclockwise (Figure 11).

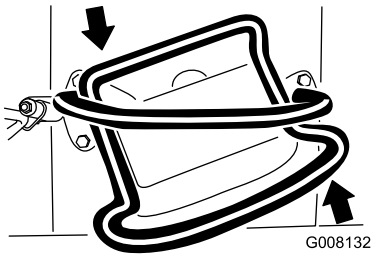

Figure 11

- To stop, release the traction control (Figure 7).

Note: The farther you move the traction control in any direction, the faster the machine will move in that direction.

Grinder Control Lever

Operate the grinder using the grinder control lever as follows:

- To start the grinder (Figure 12), press the red button on the top of the lever, then squeeze the trigger. Once the grinder has started, you can release the red button.
- To stop the grinder (Figure 12), release the trigger for more than a half second.

Note: If you are operating the grinder an momentarily release the trigger (i.e., less than a half second) the grinder will continue operation.

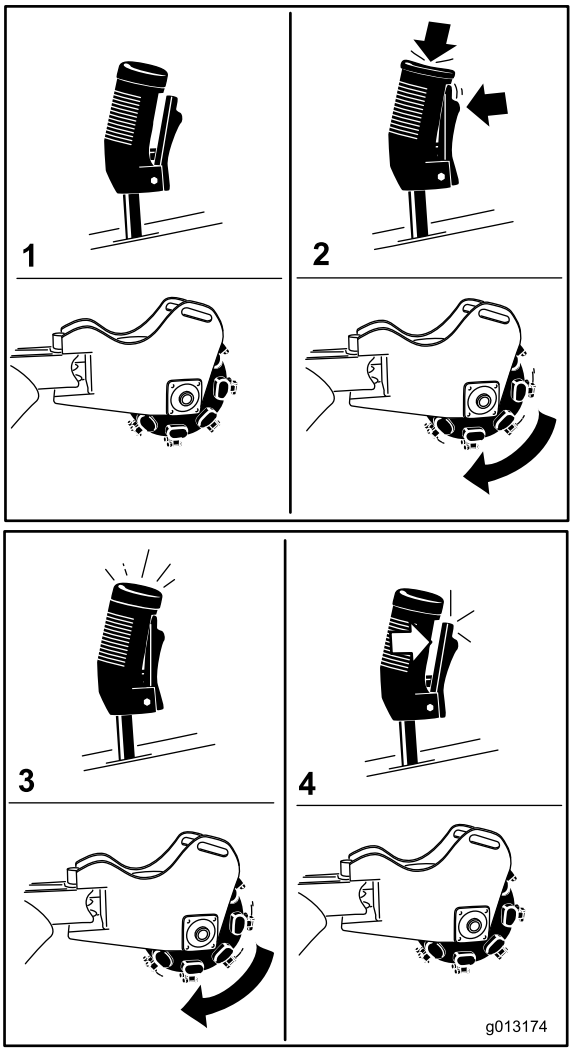

Figure 12

1. Neutral
2. Start the grinder
3. Run the grinder
4. Stop the grinder

- To raise the grinder, pull back on the lever (Figure 13).

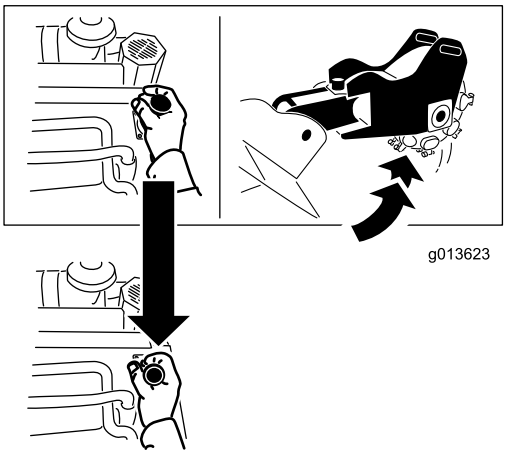

Figure 13

- To lower the grinder, push the lever forward (Figure 14).

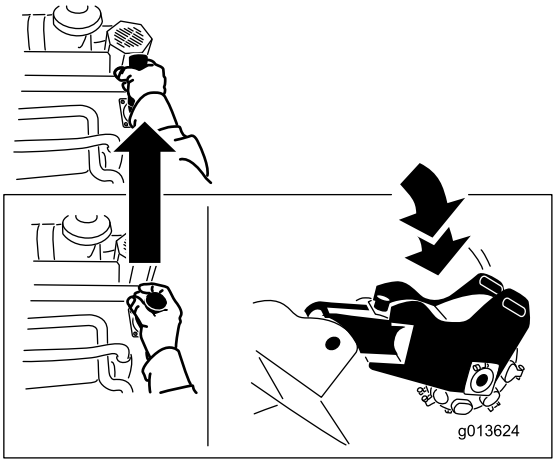

Figure 14

- To rotate the grinder to the right or left, move the lever in the desired direction.



Figure 15

Specifications

Note: Specifications and design are subject to change without notice.

Width	33.15 inches (84.2 cm)
Length	78.15 inches (198.5 cm)
Height	44.61 inches (113.3 cm)
Weight	1200 lb (544 Kg)

Attachments/Accessories

A selection of Toro approved attachments and accessories are available for use with the machine to enhance and expand its capabilities. Contact your Authorized Service Dealer or Distributor or go to www.Toro.com for a list of all approved attachments and accessories.

Operation

Note: Determine the left and right sides of the machine from the normal operating position.

Important: Before operating, check the fuel and oil level, and remove debris from the machine. Also, ensure that the area is clear of people and debris. You should also know and have marked the locations of all utility lines.

Adding Fuel

Use unleaded gasoline (87 pump octane minimum). Leaded, regular gasoline may be used if unleaded is not available.

⚠ DANGER

In certain conditions, gasoline is extremely flammable and highly explosive. A fire or explosion from gasoline can burn you and others and can damage property.

- **Fill the fuel tank outdoors, in an open area, when the engine is cold. Wipe up any gasoline that spills.**
- **Never fill the fuel tank inside an enclosed trailer.**
- **Do not fill the fuel tank completely full. Add gasoline to the fuel tank until the level is 1/4 to 1/2 inch (6 to 13 mm) below the bottom of the filler neck. This empty space in the tank allows gasoline to expand.**
- **Never smoke when handling gasoline, and stay away from an open flame or where gasoline fumes may be ignited by a spark.**
- **Store gasoline in an approved container and keep it out of the reach of children. Never buy more than a 30-day supply of gasoline.**
- **Do not operate without entire exhaust system in place and in proper working condition.**

⚠ DANGER

In certain conditions during fueling, static electricity can be released causing a spark which can ignite the gasoline vapors. A fire or explosion from gasoline can burn you and others and can damage property.

- **Always place gasoline containers on the ground away from your vehicle before filling.**
- **Do not fill gasoline containers inside a vehicle or on a truck or trailer bed because interior carpets or plastic truck bed liners may insulate the container and slow the loss of any static charge.**
- **When practical, remove gas-powered equipment from the truck or trailer and refuel the equipment with its wheels on the ground.**
- **If this is not possible, then refuel such equipment on a truck or trailer from a portable container, rather than from a gasoline dispenser nozzle.**
- **If a gasoline dispenser nozzle must be used, keep the nozzle in contact with the rim of the fuel tank or container opening at all times until fueling is complete.**

Important: Do not use methanol, gasoline containing methanol, or gasohol containing more than 10% ethanol because the fuel system could be damaged. Do not mix oil with gasoline.

Using Stabilizer/Conditioner

Use a fuel stabilizer/conditioner in the machine to provide the following benefits:

- Keeps gasoline fresh during storage of 90 days or less. For longer storage it is recommended that the fuel tank be drained.
- Cleans the engine while it runs
- Eliminates gum-like varnish buildup in the fuel system, which causes hard starting

Important: Do not use fuel additives containing methanol or ethanol.

Add the correct amount of gas stabilizer/conditioner to the gas.

Note: A fuel stabilizer/conditioner is most effective when mixed with fresh gasoline. To minimize the chance of varnish deposits in the fuel system, use fuel stabilizer at all times.

Filling the Fuel Tank

1. Park the machine on a level surface, lower the grinder, and stop the engine.
2. Remove the key and allow the engine to cool.
3. Clean around the fuel tank cap and remove it (Figure 16).

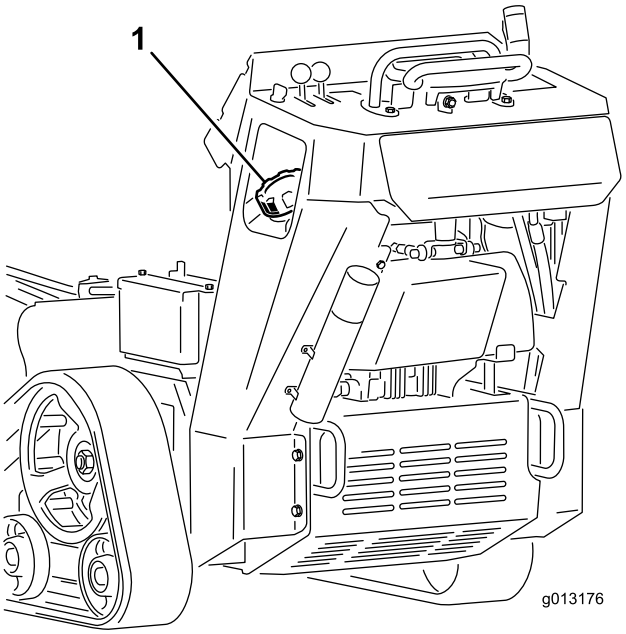

Figure 16

1. Fuel tank cap

4. Add unleaded gasoline to the fuel tank, until the level is 1/4 to 1/2 inch below the bottom of the filler neck.

   Important: This space in the tank allows gasoline to expand. Do not fill the fuel tank completely full.

5. Install the fuel tank cap securely.
6. Wipe up any gasoline that may have spilled.

Checking the Engine Oil Level

Service Interval: Before each use or daily

1. Park the machine on a level surface, lower the grinder, and stop the engine.
2. Remove the key and allow the engine to cool.
3. Clean around the oil dipstick (Figure 17).

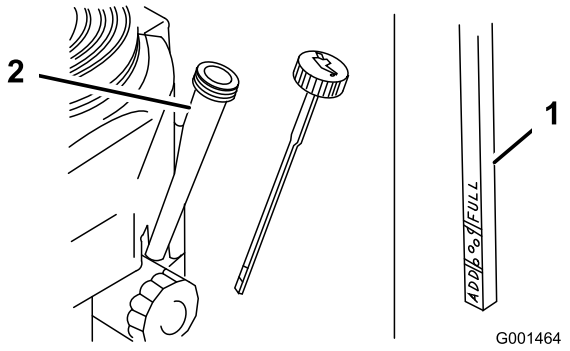

Figure 17

1. Oil filler hole
2. Oil dipstick
3. Full mark
4. Add mark

4. Remove the dipstick and wipe the end clean (Figure 17).
5. Slide the dipstick fully into the dipstick tube without threading it into the filler neck (Figure 17).
6. Pull the dipstick out and look at the end. The oil should be between the Add and Full marks (Figure 17).
7. If the oil is below the Add mark, add 10w30 engine oil to the filler hole, checking the level frequently with the dipstick, until the oil level reaches the Full mark.
8. Replace the dipstick.

Checking the Hydraulic Fluid Level

Service Interval: Every 25 hours

Hydraulic Tank Capacity: 6 US gallons (23 l)

Refer to Changing the Hydraulic Fluid (page 35) for hydraulic fluid specifications.

1. Park the machine on a level surface and lower the grinder.
2. Stop the engine, remove the key, and allow the engine to cool.
3. Look into the glass bubble on the right side of the machine. If you cannot see hydraulic fluid in the bubble, continue this procedure to add fluid.

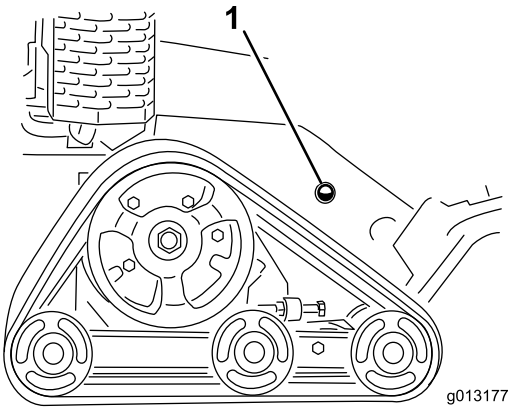

Figure 18

1. Hydraulic fluid check bubble

4. Remove the cover plate; refer to Removing the Cover Plate (page 22).
5. Clean the area around the filler neck of the hydraulic tank and remove the cap and filter from the filler neck using a socket (Figure 19).

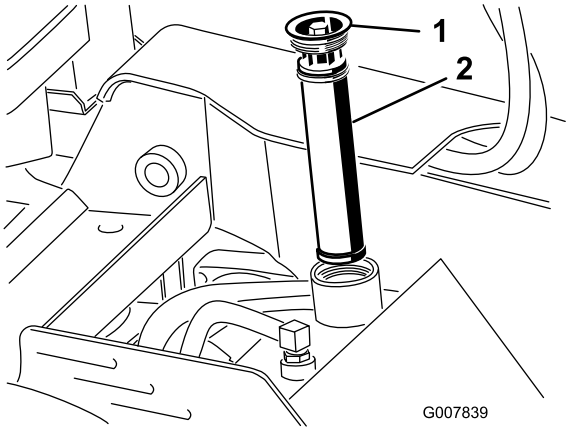

Figure 19

1. Filler neck cap
2. Hydraulic fluid filter

6. If the level is low, add fluid until it is visible in the glass bubble.
7. Install the cap and filter on the filler neck and torque bolt on top to 110 to 140 inch-lb (13 to 15.5 N-m).
8. Install the cover plate; refer to Installing the Cover Plate (page 22).

Starting and Stopping the Engine

Starting the Engine

1. Move the throttle lever midway between Slow and Fast positions (Figure 20).

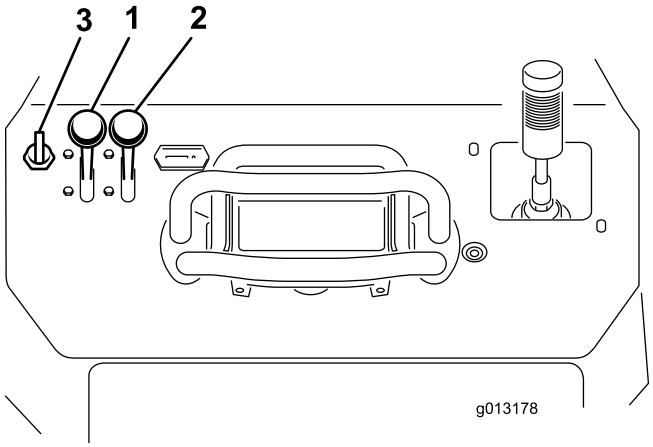

Figure 20

1. Throttle lever
2. Choke lever
3. Key

2. Move the choke lever to the On position (Figure 20).

   Note: A warm or hot engine may not require choking.

3. Turn the key to the On position (Figure 20). When the engine starts, release the key.

   Important: Do not engage the starter for more than 10 seconds at a time. If the engine fails to start, allow a 30 second cool-down period between attempts. Failure to follow these instructions can burn out the starter motor.

4. Gradually move the choke lever to the Off position (Figure 20). If the engine stalls or hesitates, engage the choke again until the engine warms up.
5. Move the throttle lever to the desired setting (Figure 20).

   Important: If the engine is run at high speeds when the hydraulic system is cold (i.e., when the ambient air temperature is near freezing or lower), hydraulic system damage could occur. When starting the engine in cold conditions, allow the engine to run in the middle throttle position for 2 to 5 minutes before moving the throttle to fast (rabbit).

   Note: If the outdoor temperature is below freezing, store the machine in a garage to keep it warmer and aid in starting.

Stopping the Engine

1. Stop the grinder and lower it to the ground.
2. Move the throttle lever to the Slow position (Figure 20).

3. Turn the key off (Figure 20).

   Note: If the engine has been working hard or is hot, let it idle for a minute before turning the ignition key off. This helps cool the engine before it is stopped. In an emergency, the engine may be stopped immediately.

4. Remove the key.

Stopping the Machine

To stop the machine, release the traction control, move the throttle lever to slow (turtle), lower the grinder to the ground, stop the engine, and remove the key.

⚠ CAUTION

A child or untrained bystander could attempt to operate the machine and be injured.

Remove the key from the switch when leaving the machine, even if just for a few seconds.

Moving a Non-functioning Machine

Important: Do not tow or pull the machine without first opening the tow valves, or the hydraulic system will be damaged.

1. Stop the engine.
2. Remove the bottom shield.
3. Using a wrench, turn the tow valves on the hydraulic motors twice counter-clockwise (Figure 21).

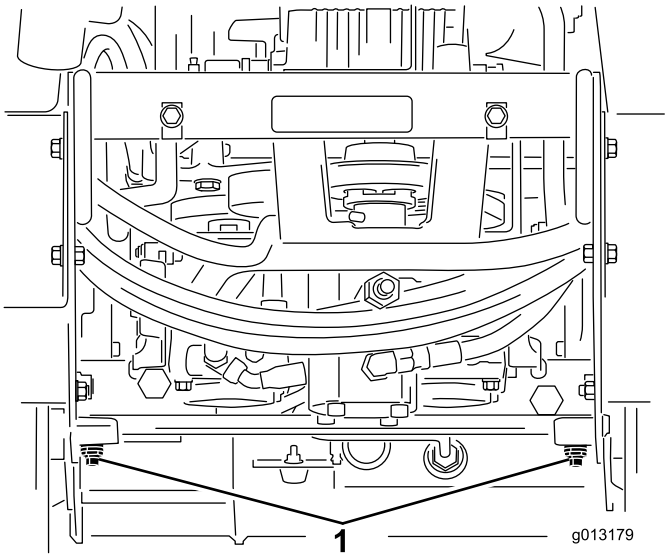

Figure 21

1. Tow valves

4. Install the bottom shield and tow the machine as required.
5. When the machine has been repaired, close the tow valves before operating it.

Grinding a Stump

⚠ DANGER

The grinder will cut and amputate hands and feet.

- **Stay in the operator's position while the grinder is running and keep away from the grinder.**
- **Keep all bystanders a safe distance from the grinder.**
- **Stop the grinder immediately if any people or animals enter the work area.**

⚠ WARNING

Grinding a stump will throw wood chips, soil, and other debris into the air which could injure you or bystanders.

- **Always wear eye protection when using the grinder.**
- **Keep all bystanders a safe distance from the grinder.**

⚠ WARNING

The grinder is very loud when cutting a stump and can damage your ears.

Always wear hearing protection when using the grinder.

1. Start the engine, raise the grinder, set the throttle lever to the Fast position, and move the machine to the stump to be ground.
2. Use the grinder control lever and the traction control to position the grinder to one side of the front of the stump, about an inch below the surface (Figure 22).

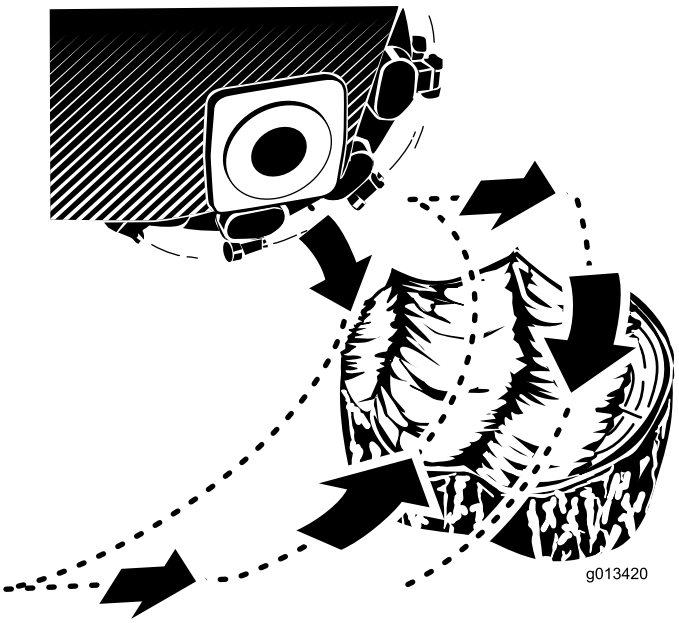

Figure 22

3. Start the grinder and wait for it to get up to full speed.
4. Use the grinder control lever to swing the grinder slowly across the face of the stump, cutting away a swath of chips (Figure 22).

   Important: Do not force the grinder to move too fast. Instead allow it to cut through the wood without bogging down or losing speed.
5. Move the machine forward a few inches and repeat step 4 (Figure 22).
6. Repeat steps 4 through 5 until you have ground off the entire face of the stump (Figure 22).
7. Back up the machine, position the grinder to the side of the front of the stump, and lower it to about an inch below the surface.
8. Repeat steps 4 through 7 until the stump is ground away.
9. If there are any large roots to be ground, position the grinder over each root and use the traction control and grinder control to move the grinder along the root, grinding it away.

Securing the Machine for Transport

When transporting the machine on a trailer, always use the following procedure:

Important: Do not operate or drive the machine on roadways.

1. Stop the engine.
2. Lower the grinder.
3. Secure the machine to the trailer with chains or straps using the tie-down/lift loops at the front and rear of the machine (Figure 23 and Figure 24). Refer to your local ordinances for trailer and tie-down requirements.

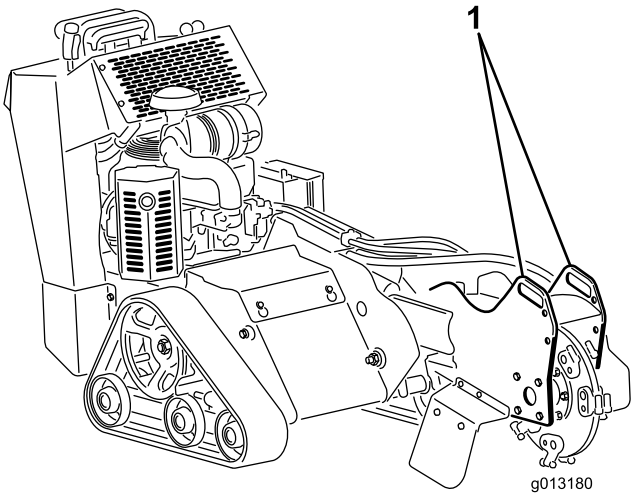

Figure 23

1. Front tie-down loop

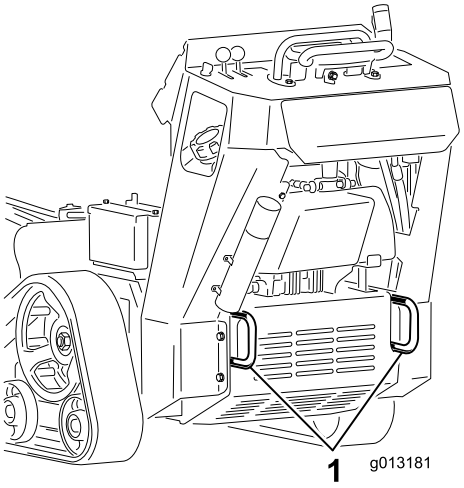

Figure 24

1. Rear tie-down loops

Lifting the Machine

You can lift the machine using the tie-down/lift loops as lift points (Figure 23 and Figure 24).

Operating Tips

- Clean the area of trash, branches and rocks before operating to prevent equipment damage.
- Always use full throttle (maximum engine speed) when grinding.

- Cut the edges of the stump for more efficient grinding. Once your cutting swath is close to 1/4 of the wheel diameter (), lift the grinder, move forward and begin cutting on the edge again.

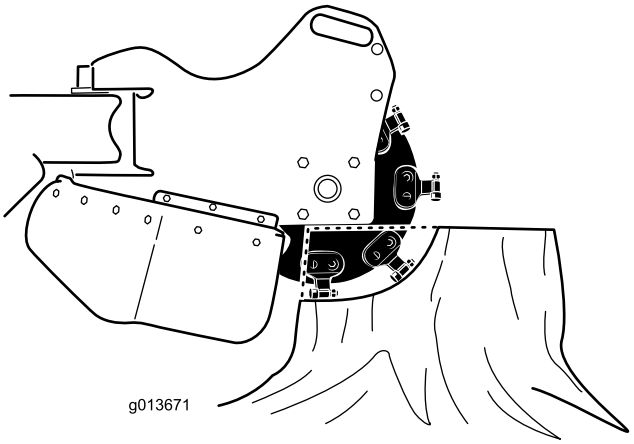

Figure 25

- Listen to the engine and watch the grinder wheel speed to maintain the speed of the wheel. Slow down the head sweep by feathering the joystick as cutting becomes difficult.
- As you grind from left to right, most of the debris will go to the left of the grinder wheel. When you grind from the right to left, the debris will go to the right.
- You may also grind a stump from the side to lessen turf damage.

Maintenance

Note: Determine the left and right sides of the machine from the normal operating position.

Recommended Maintenance Schedule(s)

Maintenance Service Interval	Maintenance Procedure
After the first 8 hours	• Change the engine oil.
After the first 50 hours	• Check and adjust the track tension.
Before each use or daily	• Check the engine oil level. • Grease the machine. (Grease immediately after every washing.) • Check the engine oil level. • Check the condition of and clean the tracks. • Check the condition of the teeth and rotate or replace any that are worn or damaged. • Remove debris from the machine. • Check for loose fasteners.
Every 25 hours	• Check the hydraulic fluid level. • Check the battery electrolyte level.
Every 100 hours	• Change the engine oil. • Check the spark plugs. • Check and adjust the track tension. • Check the hydraulic lines for leaks, loose fittings, kinked lines, loose mounting supports, wear, weather, and chemical deterioration and repair if necessary.
Every 200 hours	• Change the oil filter. • Replace the fuel filter. • Replace the hydraulic filter.
Every 250 hours	• Replace the primary air filter and check the condtion of the safety filter • Check and grease the road wheels.
Every 400 hours	• Change the hydraulic fluid.
Every 1,500 hours	• Replace all moving hydraulic hoses.
Yearly or before storage	• Check and adjust the track tension. • Touch up chipped paint

Important: **Refer to your *Engine Operator's Manual* for additional maintenance procedures.**

⚠ CAUTION

If you leave the key in the ignition switch, someone could accidently start the engine and seriously injure you or other bystanders.

Remove the key from the ignition and disconnect the wire from the spark plug before you do any maintenance. Set the wire aside so that it does not accidentally contact the spark plug.

Premaintenance Procedures

Before opening any of the covers, stop the engine, remove the key, and allow the engine to cool.

Important: **The fasteners on the covers of this machine are designed to remain on the cover after removal . Loosen all of the fasteners on each cover a few turns so that the cover is loose but still attached, then go back and loosen them until the cover comes free. This will prevent you from accidentally stripping the bolts free of the retainers.**

Removing the Cover Plate

1. Lower the grinder, stop the engine, and remove the key.

⚠ WARNING

There is a belt under the cover that is moving when the machine is running and can catch fingers, hands, loose hair, and clothing, causing serious injury, amputation, or death.

Always stop the engine and wait for all moving parts to stop before removing the cover.

2. Loosen the bolt at the rear of the cover plate.
3. Loosen the three bolts securing the cover plate to the frame sequentially until the cover is free (Figure 26).

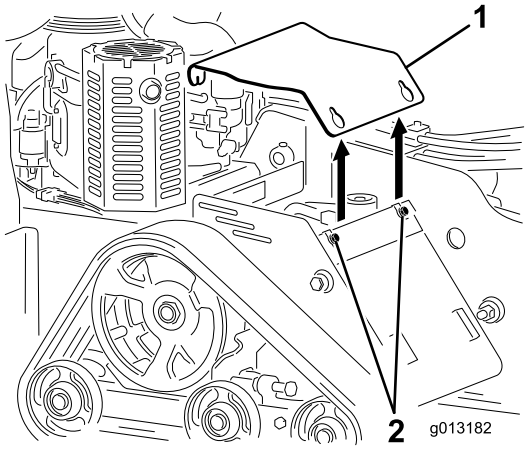

Figure 26

1. Cover plate
2. Bolts

4. Pull up on the rear of the cover plate until it clears the engine and then pull it off of the machine.

Installing the Cover Plate

1. Lower the grinder, stop the engine, and remove the key.
2. Slide the cover plate into place and secure it with the three bolts you loosened previously (Figure 26).

Removing the Bottom Shield

1. Lower the grinder, stop the engine, and remove the key.
2. Loosen the two bolts securing the bottom shield sequentially until the shield is free (Figure 27).

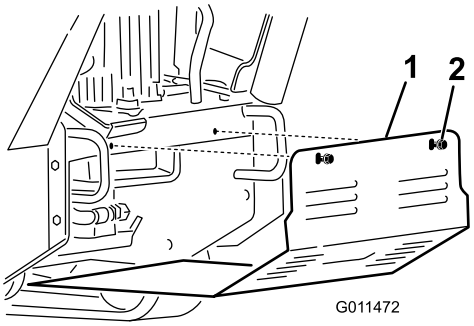

Figure 27

1. Bottom shield
2. Bolts
3. Tabs

3. Pull the shield back and out of the machine.

Installing the Bottom Shield

1. Lower the grinder, stop the engine, and remove the key.
2. Slide the bottom shield into the machine so that it rests on all 4 tabs (Figure 27).

   Note: You may need to lift up on the bottom shield to ensure that it rests on the front tabs.

3. Secure the shield with the bolts you loosened previously.

Lubrication

Greasing the Machine

Service Interval: Before each use or daily (Grease immediately after every washing.)

Grease Type: General-purpose grease.

1. Lower the grinder and stop the engine. Remove the key.
2. Clean the grease fittings with a rag.
3. Connect a grease gun to each fitting (Figure 28 and Figure 29).
4. Pump grease into the fittings until grease begins to ooze out of the bearings (approximately 3 pumps).
5. Wipe up any excess grease.

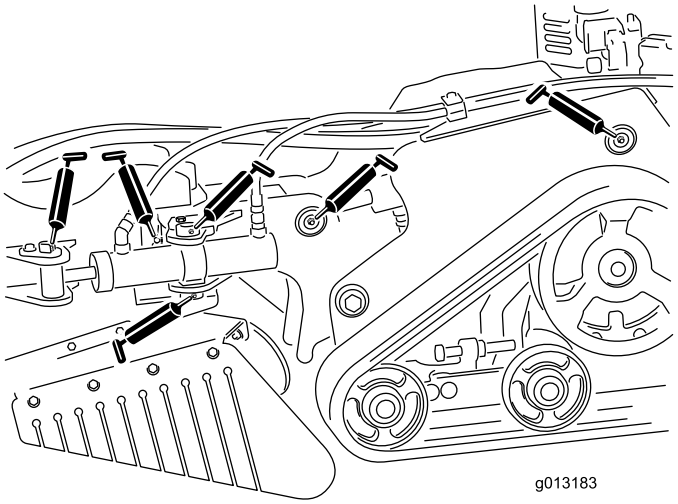

Figure 28

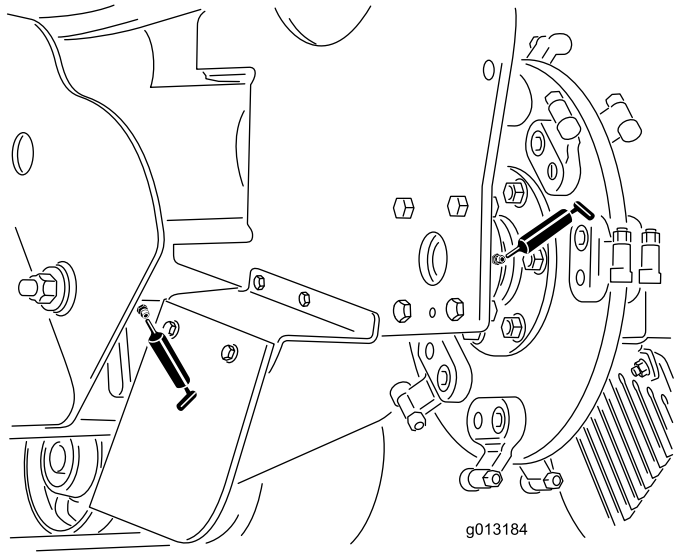

Figure 29

Engine Maintenance

Servicing the Air Cleaner

Service Interval: Every 250 hours

Cleaning the Air Cleaner Body and Cover

1. Stop the engine and remove the key.
2. Check the air cleaner body for damage which could cause an air leak. Check the whole intake system for leaks, damage, or loose hose clamps. Replace or repair and damaged components.
3. Release the latches on the air cleaner and pull the air cleaner cover off of the air cleaner body (Figure 30).

Important: Do not remove the air filters yet.

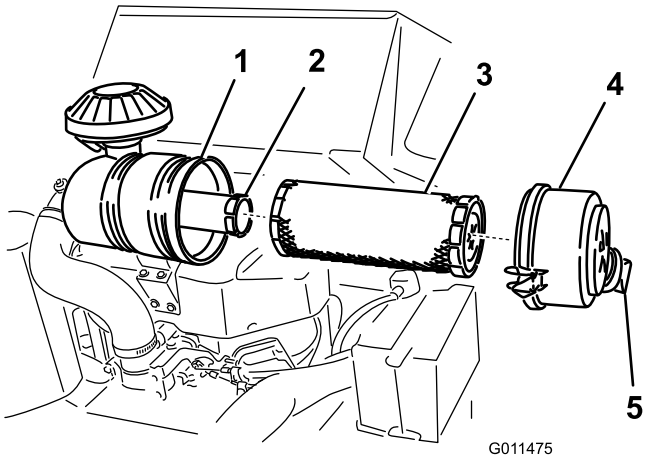

Figure 30

1. Air filter body
2. Safety filter
3. Primary filter
4. Air cleaner cover
5. Dust cap

4. Squeeze the dust cap sides to open it and knock the dust out.
5. Clean the inside of the air cleaner cover with compressed air.

Replacing the Filters

1. Gently slide the primary filter out of the air cleaner body (Figure 30). Avoid knocking the filter into the side of the body.

Important: Do not attempt to clean the primary filter.

2. Check the condition of the safety filter without removing it. If it is dirty or damaged, replace it.

Important: Never attempt to clean the safety filter.

3. Inspect the new filter(s) for damage by looking into the filter while shining a bright light on the outside of the filter. Holes in the filter will appear as bright spots. Inspect the element for tears, an oily film, or damage to the rubber seal. If the filter is damaged do not use it.
4. If you are replacing the safety filter, carefully slide the new filter into the filter body (Figure 30).

   Important: To prevent engine damage, always operate the engine with both air filters and cover installed.
5. Carefully slide the primary filter over the safety filter (Figure 30). Ensure that it is fully seated by pushing on the outer rim of the filter while installing it.

   Important: Do not press on the soft inside area of the filter.
6. Install the air cleaner cover with the dust cap oriented as shown in Figure 30 and secure the latches.

Servicing the Engine Oil

Service Interval: After the first 8 hours—Change the engine oil.

Before each use or daily—Check the engine oil level.

Every 100 hours—Change the engine oil.

Every 200 hours—Change the oil filter.

Note: Change the oil more frequently when the operating conditions are extremely dusty or sandy.

Oil Type: Detergent oil (API service SF, SG, SH, or SJ)

Crankcase Capacity: 58 ounces (1.7 liter) with the filter removed; 51 ounces (1.5 liter) without the filter removed

Viscosity: Refer to the table (Figure 31).

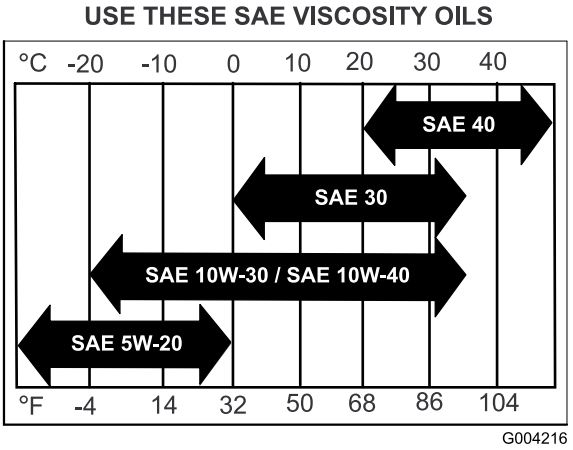

Figure 31

Checking the Engine Oil Level

1. Park the machine on a level surface.
2. Lower the grinder.
3. Stop the engine, remove the key, and wait for all moving parts to stop before leaving the operating position.
4. Clean around the oil dipstick (Figure 32) so that dirt cannot fall into the filler hole and damage the engine.

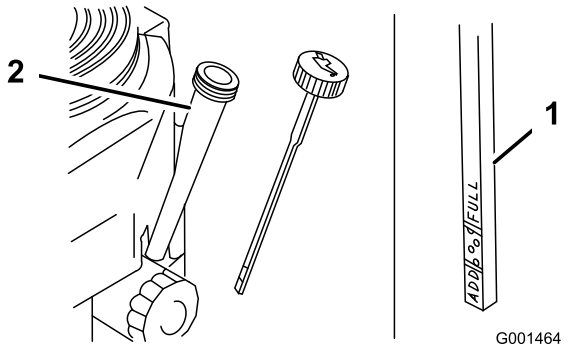

Figure 32

1. Oil dipstick
2. Filler tube

5. Unscrew the oil dipstick and wipe the end clean (Figure 32).
6. Slide the oil dipstick fully into the filler tube, but do not thread onto tube (Figure 32).
7. Pull the dipstick out and look at the end. If the oil level is low, slowly pour only enough oil into the filler tube to raise the level to the Full mark.

   Important: Do not overfill the crankcase with oil and run the engine; engine damage can result.

Changing the Oil

1. Start the engine and let it run five minutes. This warms the oil so it drains better.
2. Park the machine so that the drain side is slightly lower than the opposite side to ensure that the oil drains completely.
3. Lower the grinder.
4. Stop the engine, remove the key, and wait for all moving parts to stop before leaving the operating position.
5. Place a pan below the drain hose. Rotate the oil drain valve to allow oil to drain (Figure 33).

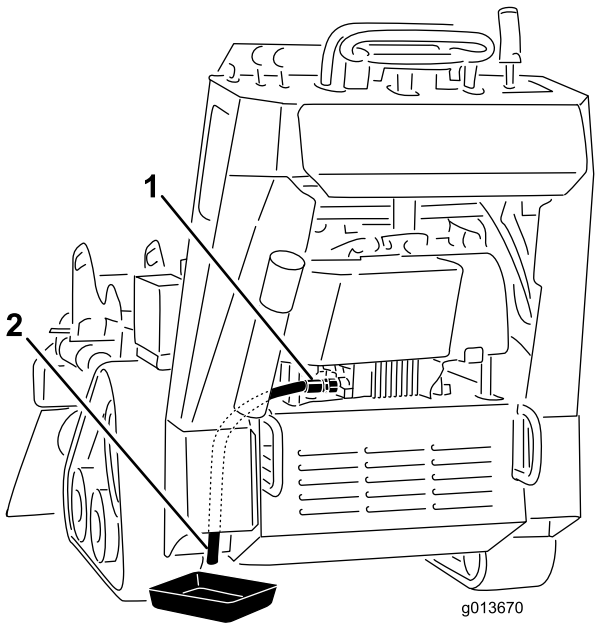

Figure 33

1. Oil drain valve
2. Oil drain hose

6. When oil has drained completely, close the drain valve.
7. Dispose of the used oil at a recycling center
8. Slowly pour approximately 80% of the specified oil into the filler tube (Figure 32).
9. Check the oil level; refer to Checking the Engine Oil Level (page 16).
10. Slowly add the additional oil to bring it to the Full mark.

Changing the Oil Filter

1. Drain the oil from the engine; refer to Changing the Oil (page 25).
2. Remove the old filter (Figure 34).

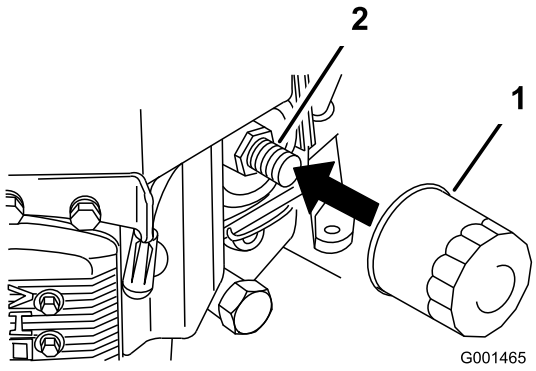

Figure 34

1. Oil filter
2. Adapter

3. Apply a thin coat of new oil to the rubber gasket on the replacement filter (Figure 34).
4. Install the replacement oil filter to the filter adapter, turn the oil filter clockwise until the rubber gasket contacts the filter adapter, then tighten the filter an additional 3/4 turn (Figure 34).
5. Fill the crankcase with the proper type of new oil; refer to Servicing the Engine Oil.
6. Run the engine for about 3 minutes, stop the engine, and check for oil leaks around the oil filter and drain valve.
7. Check the engine oil level and add oil if needed.
8. Wipe up any spilled oil.

Servicing the Spark Plug

Service Interval: Every 100 hours—Check the spark plugs.

Ensure that the air gap between the center and side electrodes is correct before installing the spark plug. Use a spark plug wrench for removing and installing the spark plug and a gapping tool/feeler gauge to check and adjust the air gap. Install a new spark plug if necessary.

Type: Model 23210—NGK BPR4Es or equivalent; Air Gap: 0.030 inch (0.75 mm)

Removing the Spark Plug

1. Lower the grinder.
2. Stop the engine, remove the key, and wait for all moving parts to stop before leaving the operating position.
3. Disconnect the wire from the spark plug (Figure 35).

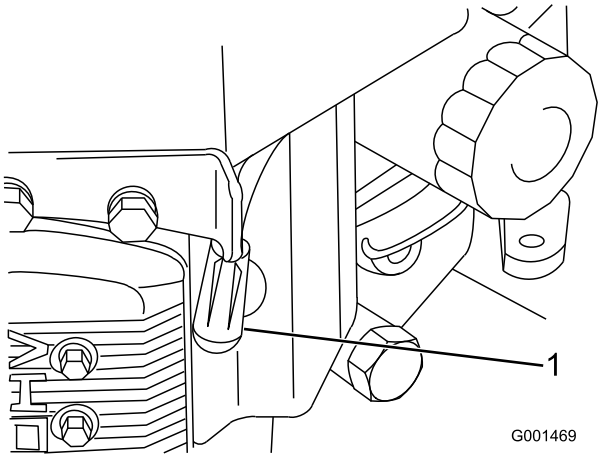

Figure 35

1. Spark-plug wire/spark plug

4. Clean around the spark plug to prevent dirt from falling into the engine and potentially causing damage.

   Note: The heat shield may interfere on the right side; remove it if necessary and replace it when finished.

5. Remove the spark plug and the metal washer.

Checking the Spark Plug

1. Look at the center of the spark plug (Figure 36). If you see light brown or gray on the insulator, the engine is operating properly. A black coating on the insulator usually means that the air cleaner is dirty.
2. If needed, clean the spark plug with a wire brush to remove carbon deposits.

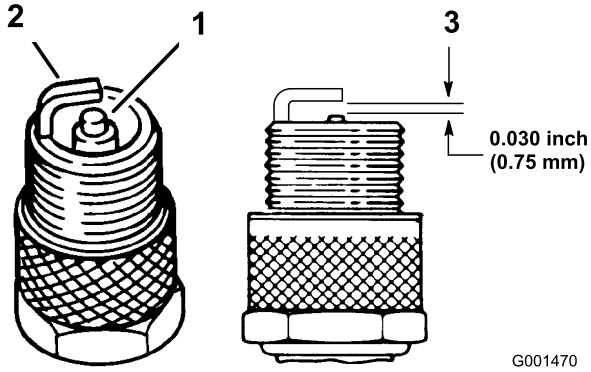

Figure 36

1. Center electrode insulator
2. Side electrode
3. Air gap (not to scale)

Important: Always replace the spark plug when it has worn electrodes, an oily film on it, or has cracks in the porcelain.

3. Check the gap between the center and side electrodes (Figure 36). Bend the side electrode (Figure 36) if the gap is not correct.

Installing the Spark Plug

1. Install the spark plug and the metal washer. Ensure that the air gap is set correctly.
2. Tighten the spark plug to 16 ft-lb (22 N-m).
3. Connect the wire to the spark plug (Figure 36).

Fuel System Maintenance

Draining the Fuel Tank

⚠ DANGER

In certain conditions, gasoline is extremely flammable and highly explosive. A fire or explosion from gasoline can burn you and others and can damage property.

- **Drain gasoline from the fuel tank when the engine is cold. Do this outdoors in an open area. Wipe up any gasoline that spills.**
- **Never smoke when draining gasoline, and stay away from an open flame or where a spark may ignite the gasoline fumes.**

1. Park the machine on a level surface, to ensure that the fuel tank drains completely.
2. Lower the grinder.
3. Stop the engine, remove the key, and wait for all moving parts to stop before leaving the operating position.
4. Turn the fuel shut-off valve to the closed position (Figure 37).

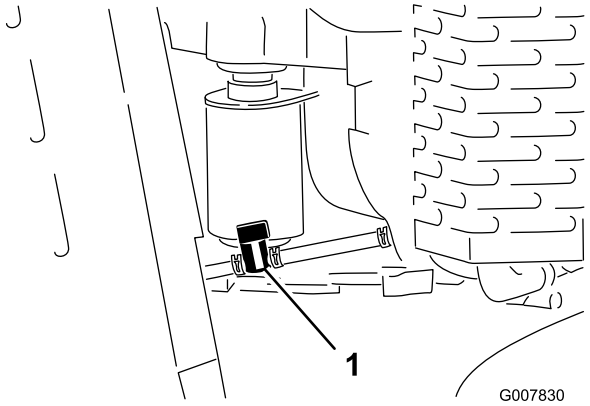

Figure 37

1. Fuel shut-off valve

5. Squeeze the ends of the hose clamp on the engine side of the shut-off valve together and slide it up the fuel line away from valve (Figure 37).
6. Pull the fuel line off the valve (Figure 37). Open the fuel shut-off valve and allow the gasoline to drain into a gas can or drain pan.

   Note: Now is the best time to install a new fuel filter because the fuel tank is empty. Refer to Replacing the Fuel Filter.

7. Install the fuel line onto the fuel shut-off valve. Slide the hose clamp close to the valve to secure the fuel line.
8. Wipe up any spilled fuel.

Replacing the Fuel Filter

Service Interval: Every 200 hours

Never install a dirty filter if it is removed from the fuel line.

Note: Note how the fuel filter is installed in order to install the new filter correctly.

Note: Wipe up any spilled fuel.

1. Lower the grinder.
2. Stop the engine, remove the key, and wait for all moving parts to stop before leaving the operating position.
3. Turn the fuel shut-off valve to the closed position (Figure 37).
4. Squeeze the ends of the hose clamps together and slide them away from the filter (Figure 38).

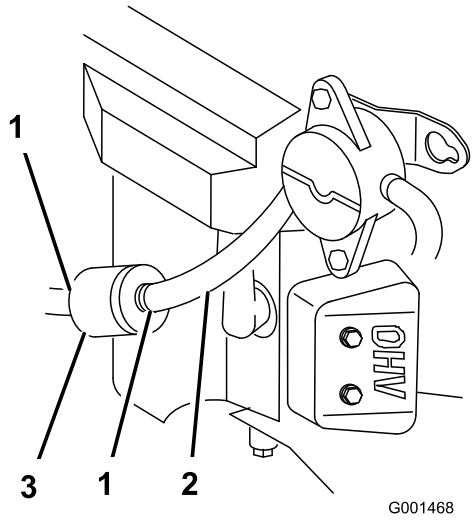

Figure 38

1. Hose clamp
2. Fuel line
3. Filter

5. Remove the filter from the fuel lines.
6. Install a new filter and move the hose clamps close to the filter.
7. Turn the fuel shut-off valve to the open position (Figure 37).
8. Check for fuel leaks and repair if needed.
9. Wipe up any spilled fuel.

Electrical System Maintenance

Servicing the Battery

Service Interval: Every 25 hours—Check the battery electrolyte level.

Always keep the battery clean and fully charged. Use a paper towel to clean the battery case. If the battery terminals are corroded, clean them with a solution of four parts water and one part baking soda. Apply a light coating of grease to the battery terminals to prevent corrosion.

Voltage: 12 V with 280 cold cranking Amps @ 0 degrees F (-18 degrees C).

WARNING

CALIFORNIA
Proposition 65 Warning

Battery posts, terminals, and related accessories contain lead and lead compounds, chemicals known to the State of California to cause cancer and reproductive harm. Wash hands after handling.

⚠ DANGER

Battery electrolyte contains sulfuric acid which is a deadly poison and causes severe burns.

Do not drink electrolyte and avoid contact with skin, eyes or clothing. Wear safety glasses to shield your eyes and rubber gloves to protect your hands.

Removing the Battery

⚠ WARNING

Battery terminals or metal tools could short against metal machine components causing sparks. Sparks can cause the battery gasses to explode, resulting in personal injury.

- **When removing or installing the battery, do not allow the battery terminals to touch any metal parts of the machine.**
- **Do not allow metal tools to short between the battery terminals and metal parts of the machine.**

⚠ WARNING

Incorrect battery cable routing could damage the machine and cables causing sparks. Sparks can cause the battery gasses to explode, resulting in personal injury.

- **Always Disconnect the negative (black) battery cable before disconnecting the positive (red) cable.**
- **Always Reconnect the positive (red) battery cable before reconnecting the negative (black) cable.**

1. Lower the grinder.
2. Stop the engine, remove the key, and wait for all moving parts to stop before leaving the operating position.
3. Lift the black rubber cover on the negative cable. Disconnect the negative battery cable from the negative (-) battery terminal (Figure 39).

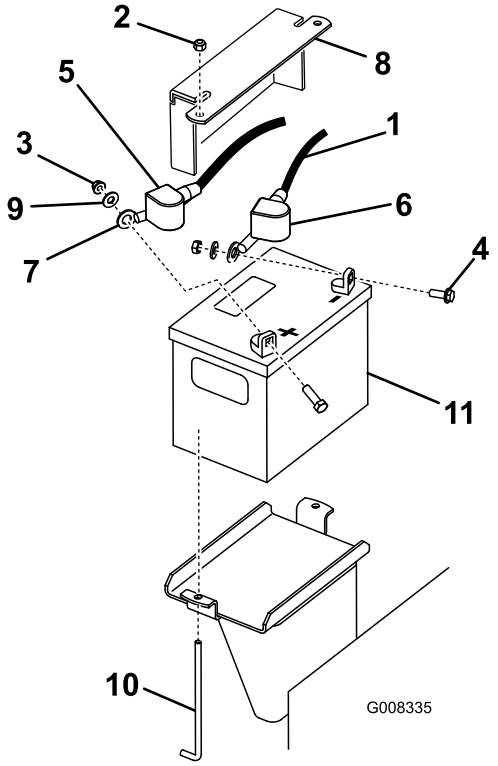

Figure 39

1. Negative cable
2. Nut (1/4 inch)
3. Nut (5/16 inch)
4. Bolt
5. Rubber cover (red)
6. Rubber cover (black)
7. Positive cable
8. Battery hold down plate
9. Washer
10. J-bolt
11. Battery

4. Slide the red terminal boot off the positive (red) battery terminal. Then remove the positive (red) battery cable (Figure 39).
5. Remove the hold down plate, j-bolts, and locknuts securing the battery (Figure 39) and remove the battery.

Installing the Battery

1. Place the battery onto the machine (Figure 39).
2. Secure the battery with the hold down plate, j-bolts, and locknuts.
3. First, install the positive (red) battery cable to positive (+) battery terminal with a nut, washer and bolt (Figure 39). Slide the rubber cover over the post.
4. Then install the negative battery cable and ground wire to the negative (-) battery terminal with a nut, washer and bolt (Figure 39). Slide the rubber cover over the post.

Checking the Battery Electrolyte Level

⚠ DANGER

Battery electrolyte contains sulfuric acid which is a deadly poison and causes severe burns.

- **Do not drink electrolyte and avoid contact with skin, eyes or clothing. Wear safety glasses to shield your eyes and rubber gloves to protect your hands.**
- **Fill the battery where clean water is always available for flushing the skin.**

1. Look at the side of the battery. The electrolyte must be up to the **upper** line (Figure 40). Do not allow the electrolyte to fall below the Lower line (Figure 40).

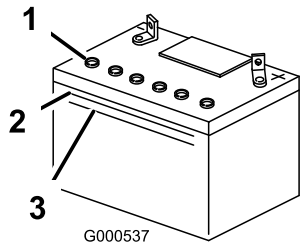

Figure 40

1. Vent caps
2. Upper line
3. Lower line

2. If the electrolyte is low, add the required amount of distilled water; refer to Adding Water to the Battery.

Adding Water to the Battery

The best time to add distilled water to the battery is just before you operate the machine. This lets the water mix thoroughly with the electrolyte solution.

1. Remove the battery from the machine; refer to Removing the Battery.

   Important: Never fill the battery with distilled water while the battery is installed in the machine. Electrolyte could be spilled on other parts and cause corrosion.

2. Clean the top of the battery with a paper towel.
3. Remove the vent caps from the battery (Figure 40).
4. Slowly pour distilled water into each battery cell until the electrolyte level is up to the Upper line (Figure 40) on the battery case.

   Important: Do not overfill the battery because electrolyte (sulfuric acid) can cause severe corrosion and damage to the chassis.

5. Wait five to ten minutes after filling the battery cells. Add distilled water, if necessary, until the electrolyte level is up to the Upper line (Figure 40) on the battery case.
6. Install the battery vent caps.

Charging the Battery

⚠ WARNING

Charging the battery produces gasses that can explode.

Never smoke near the battery and keep sparks and flames away from battery.

Important: Always keep the battery fully charged (1.265 specific gravity). This is especially important to prevent battery damage when the temperature is below 32°F (0°C).

1. Remove the battery from the chassis; refer to Removing the Battery.
2. Check the electrolyte level; refer to Checking the Electrolyte Level.
3. Make sure the filler caps are installed in battery. Connect a 3 to 4 amp battery charger to the battery posts. Charge the battery at a rate of 3 to 4 amperes for 4 to 8 hours (12 volts). **Do not overcharge the battery.**

4. When the battery is fully charged, unplug the charger from the electrical outlet, then disconnect the charger leads from the battery posts (Figure 41).
5. Install the battery onto the machine and connect the battery cables, refer to Installing the Battery.

   Note: Do not run the machine with the battery disconnected, electrical damage may occur.

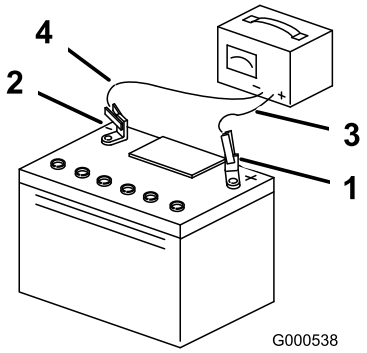

Figure 41

1. Positive Battery Post
2. Negative Battery Post
3. Red (+) Charger Lead
4. Black (-) Charger Lead

Replacing the Fuses

There are 4 fuses in the electrical system. They are under the control panel on the left side (Figure 42).

Start Circuit	30 amp
Charge Circuit	25 amp
Cooler fan Circuit	15 amp
Headlight (optional)	15 amp

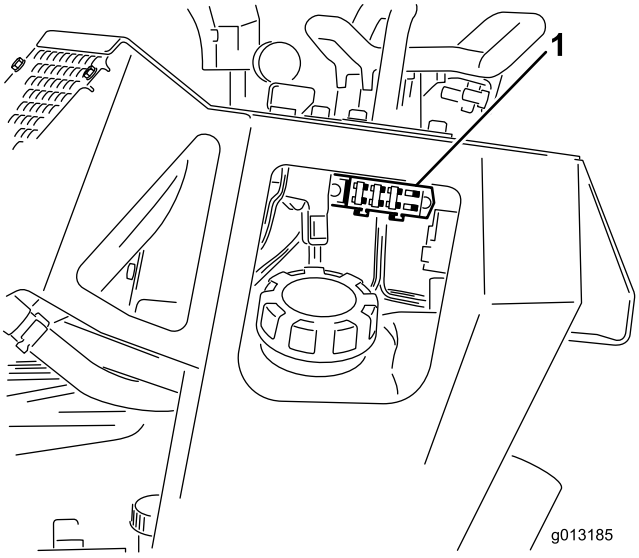

Figure 42

1. Fuse block

Drive System Maintenance

Servicing the Tracks

Cleaning the Tracks

Service Interval: Before each use or daily

Check the tracks for excessive wear and clean them periodically. If the tracks are worn, replace them.

1. Lower the grinder.
2. Stop the engine, remove the key, and wait for all moving parts to stop before leaving the operating position.
3. Using a water hose or pressure washer, remove dirt from each track system.

Important: Ensure that you use high-pressure water to wash only the track area. Do not use a high-pressure washer to clean the rest of the machine. High-pressure washing can damage the electrical system and hydraulic valves or deplete grease.

Important: Ensure that you fully clean the road wheels and the drive sprocket (Figure 43).

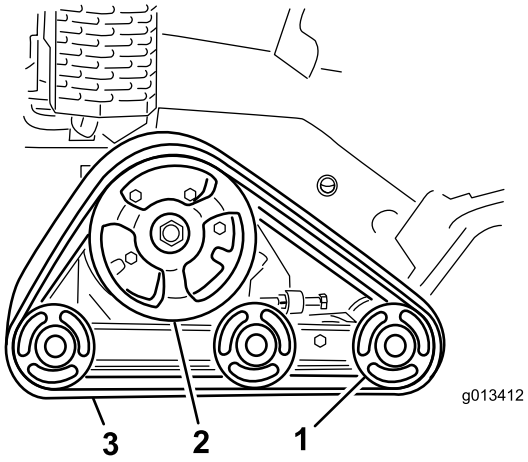

Figure 43

1. Road wheels
2. Drive sprocket
3. Track

Checking and Adjusting the Track Tension

Service Interval: After the first 50 hours

Every 100 hours

To check the tension of each track, place 45 lb (20.4 kg) on the track midway between the front road wheel and

the drive sprocket. The track should flex no more than 1/4 to 3/8 inch (0.6 to 1 cm). If it does, adjust the track tension using the following procedure:

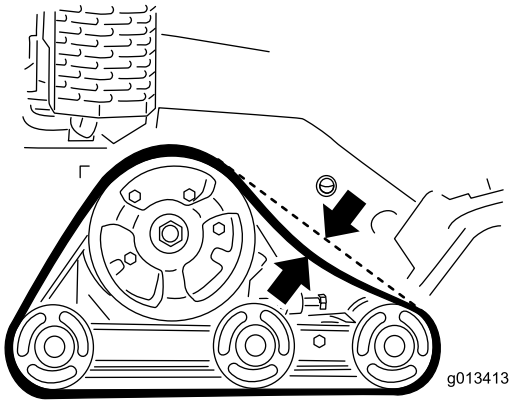

Figure 44

1. Stop the machine in on a level surface.
2. Stop the engine, lower the grinder, remove the key, and wait for all moving parts to stop before leaving the operating position.
3. Loosen the jam nut on the track tensioning bolt and the clamp bolts on the tension arm (Figure 45).

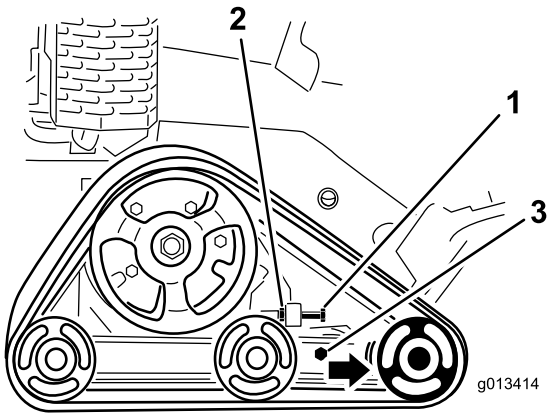

Figure 45

1. Tensioning bolt
2. Jam nut
3. Clamp bolts

4. Torque the tensioning bolt to 24 to 30 ft-lb (32.5 to 40 N-m) to tighten the track (Figure 45).
5. Ensure that the track deflects less than 1/4 to 3/8 inch (0.6 to 1 cm) when 45 lb (20.6 kg) of force is applied to the track span. Adjust the torque on the tensioning bolt as needed.
6. Tighten the jam nut.
7. Tighten the clamp bolts and torque to 75 ft-lb (102 N-m).

Replacing the Tracks

When the tracks are badly worn, replace them.

1. Lower the grinder.
2. Stop the engine, remove the key, and wait for all moving parts to stop before leaving the operating position.
3. Lift/support the side of the unit to be worked on so that the track is 3 to 4 inches (7.6 to 10 cm) off of the ground.
4. Back out the tensioning bolt and jam nut (Figure 45).
5. Loosen the clamp bolts (Figure 45).
6. Push the front road wheel rearward as far as it will go (Figure 46).

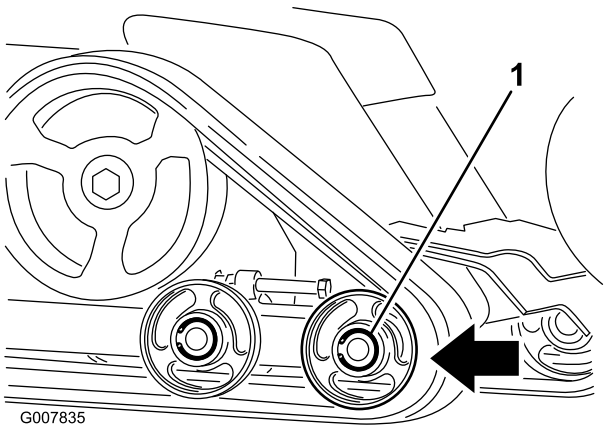

Figure 46

7. Begin removing the track at the top of the front road wheel, peeling it off of the wheel while rotating the track forwards.

   Note: You may need to remove the front, outside road wheel. To remove this wheel, remove the snap ring and cap from the center of the road wheel (Figure 47). Next remove the bolt and gasket from the center of the wheel and pull the wheel off of the machine.

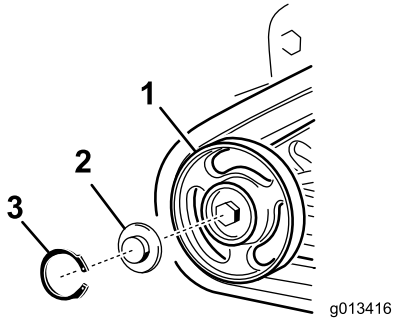

Figure 47

1. Snap ring
2. Cap
3. Bolt
4. Gasket
5. Wheel with bearings

8. When the track is off of the road wheel, remove it from the machine (Figure 46).

9. Beginning at the drive sprocket, coil the new track around the sprocket, ensuring that the lugs on the track fit between the spacers on the sprocket (Figure 46).
10. Push the track under and between the rear and center road wheels (Figure 46).
11. Starting at the bottom of the front road wheel, install the track around the wheel by rotating the track rearward while pushing the lugs into the wheel.
12. If you removed the front, outside road wheel, install it at this time using the bolt and gasket removed previously. Torque the bolt to 75 ft-lb (102 N-m) and then clean, grease, and install the cap and snap ring as instruction in the Checking and Greasing the Road Wheels section.
13. Install the tensioning bolt and jam nut.
14. Torque the tensioning bolt to 24 to 30 ft-lb (32.5 to 40 N-m) to tighten the track.
15. Ensure that the track deflects less than 1/4 to 3/8 inch (0.6 to 1 cm) when 45 lb (20.6 kg) of force is applied to the track span. Adjust the torque on the tensioning bolt as needed.
16. Tighten the jam nut.
17. Tighten the clamp bolts and torque to 75 ft-lb (102 N-m).
18. Lower the machine to the ground.
19. Repeat steps 3 through 18 to replace the other track.

Checking and Greasing the Road Wheels

Service Interval: Every 250 hours

1. Remove the tracks; refer to Replacing the Tracks (page 31).
2. Remove the snap ring and cap from a road wheel (Figure 48).

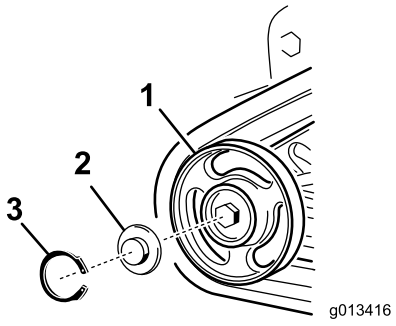

Figure 48

1. Road wheel
2. Road wheel cap
3. Snap ring

3. Check the grease under the cap and around the gasket (Figure 48). If it is dirty, gritty, or depleted, clean out all of the grease, replace the gasket, and add new grease.
4. Ensure that the road wheel turns smoothly on the bearing. If it is frozen, contact your Authorized Service Dealer to replace the road wheel.
5. Place the greased road wheel cap over the bolt head (Figure 48).
6. Secure the road wheel cap with the snap ring (Figure 48).
7. Repeat steps 2 through 6 for all 12 road wheels.
8. Install the tracks; refer to Replacing the Tracks (page 31).

Belt Maintenance

Replacing the Pump Drive Belt

If the pump drive belt begins to squeal or is cracked, worn, or frayed, replace it. Contact you Authorized Service Dealer for a replacement belt.

1. Raise the grinder.
2. Stop the engine, remove the key, and wait for all moving parts to stop before leaving the operating position.
3. Raise the back of the machine and support it on jack stands.
4. Remove the bottom shield; refer to Removing the Bottom Shield.
5. Loosen the two pump bolts (Figure 49).

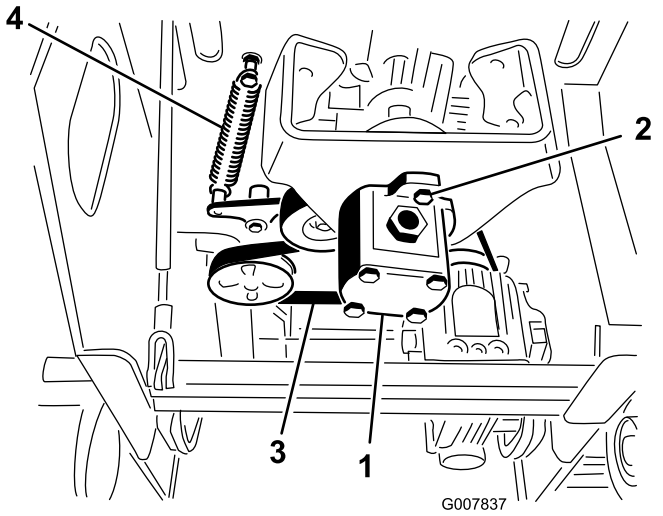

Figure 49

1. Pump
2. Pump bolts
3. Belt
4. Idler pulley spring

6. Twist the pump counter clockwise and allow it to drop down away from the pulley (Figure 49). Ensure that the spider coupler drops down with the pump.
7. Using a spring puller (contact your Authorized Service Dealer) or stiff metal hook, pull the end of the idler pulley sprint off of the spring bolt to release tension on the belt (Figure 49).
8. Remove the belt.
9. Route a new belt around the pulleys.
10. Install the idler pulley spring on the bolt.
11. Ensure that the spider coupler is in place on the pump and then insert it into the pulley, twisting it clockwise to seat it on the pump bolts.
12. Torque the pump bolts to 50 ft-lb (68 N-m).
13. Install the bottom shield.

Controls System Maintenance

The factory adjusts the controls before shipping the machine. However, after many hours of use, you may need to adjust the traction control alignment, the neutral position of the traction control, and the tracking of the traction control in the full forward position.

Important: To adjust the controls properly, complete each procedure in the order listed.

Adjusting the Traction Control Alignment

If the traction control bar does not rest flush and square with the reference bar when in the full backward position, immediately complete the following procedure:

1. Park the machine on a flat surface and lower the grinder.
2. Stop the engine and remove the key.
3. Pull straight back on the traction control so the front of the control contacts the reference bar (Figure 50).

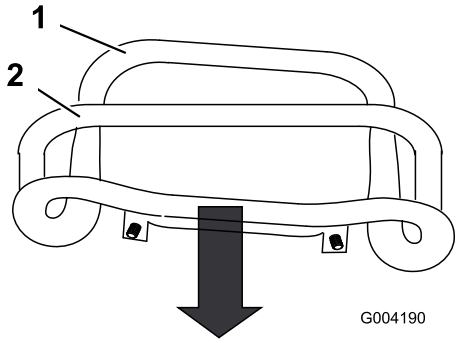

Figure 50

1. Front of the control, out of alignment
2. Reference bar

4. If the front of the traction control does not rest square and flush with the reference bar, loosen the flange nut and bolt in the stem of the traction control (Figure 51).

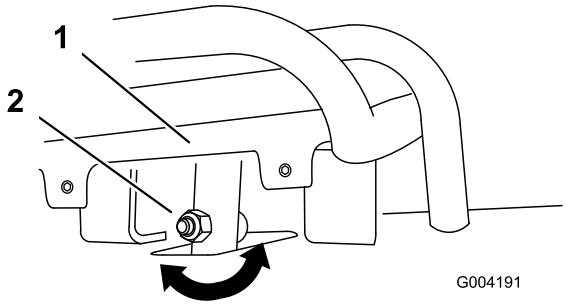

Figure 51

1. Traction control
2. Stem , bolt and nut

5. Adjust the traction control so that it rests flush against the reference bar when it is pulled straight back (Figure 51 and Figure 52).

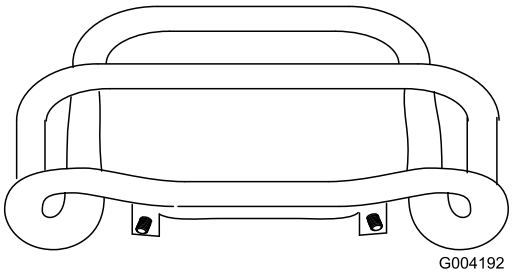

Figure 52

6. Tighten the flange nut and bolt in the traction control stem.
7. Start the engine.
8. Drive the machine in reverse with the traction control tight to the reference bar. If the machine does not back up straight, complete the following procedure:
   A. Stop the engine
   B. Lift/support the machine so that both tracks are off of the ground and are free to run.
   C. Loosen the flange nut and bolt in the stem of the traction control (Figure 51).
   D. Loosen the jam nuts on the traction rods, under the control panel (Figure 53).

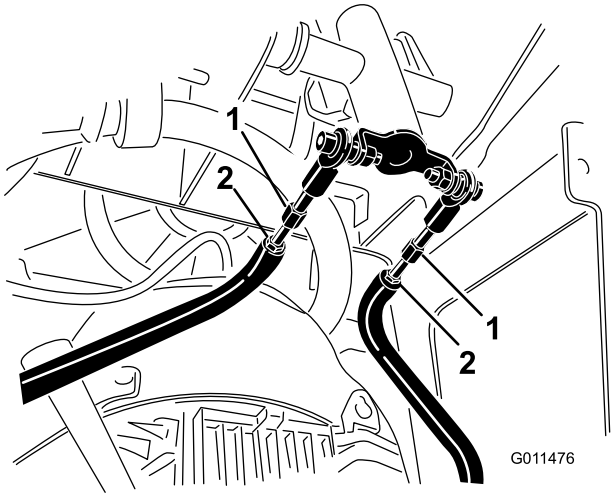

Figure 53

1. Traction rod
2. Jam nut

E. Start the machine and set the throttle to about 1/3 open position.

⚠ WARNING

When the machine is running, you could be caught and injured in moving parts or burned on hot surfaces.

Stay away from pinch points, moving parts, and hot surfaces when adjusting the running machine.

F. Have a helper hold the traction control tight to the reference bar in reverse.

G. Adjust the length of the traction rods until both tracks are running at the same speed.

Note: You can also adjust the maximum reverse speed of the tracks at this time.

H. Tighten the jam nuts.

I. Adjust the traction control so that it rests flush against the reference bar when it is pulled straight back (Figure 51 and Figure 52).

J. Tighten the flange nut and bolt in the traction control stem.

K. Stop the engine and lower the machine to the ground.

L. Drive the machine in full reverse, checking to see if the unit tracks straight. If it does not, note the direction the machine veers. Repeat the adjustment previously described so that it tracks straight in reverse.

Adjusting the Traction Control Neutral Position

If the machine creeps forward or backward when the traction control is in neutral and the unit is warm, the return-to-neutral mechanism on the pumps may need to be adjusted; contact you Authorized Service Dealer for repairs.

Adjusting the Tracking of the Traction Control, Full Forward Position

If the machine does not drive straight when you hold the traction control forward against the reference bar, complete the following procedure:

1. Drive the machine with the traction control against the reference bar, noting which direction the machine veers.
2. Release the traction control.
3. If the machine veers to the **left**, loosen the **right** jam nut and adjust the tracking set screw on the front of the traction control (Figure 54).
4. If the machine veers to the **right**, loosen the **left** jam nut and adjust the tracking set screw on the front of the traction control (Figure 54).

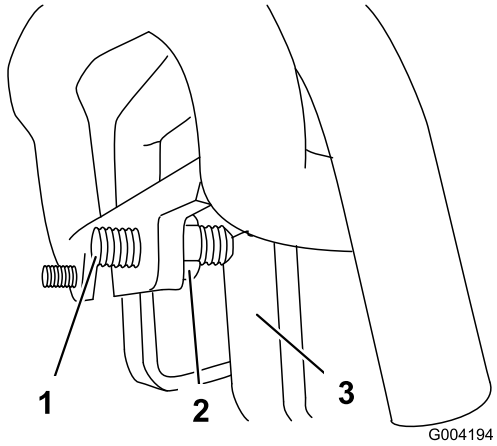

Figure 54

1. Set screw
2. Jam nut
3. Stop

5. Repeat steps 1 through 4 until the machine drives straight in the full forward position.

   Important: Ensure the tracking set screws touch the stops in the full forward position to avoid over stroking the hydraulic pumps.

Hydraulic System Maintenance

Replacing the Hydraulic Filter

Service Interval: Every 200 hours

1. Position machine on a level surface.
2. Lower the grinder.
3. Stop the engine, remove the key, and wait for all moving parts to stop before leaving the operating position.
4. Remove the top cover.
5. Remove and discard the old filter (Figure 55).

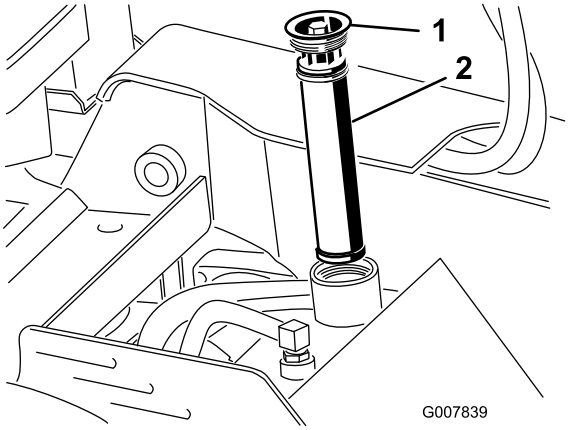

Figure 55

1. Filler cap
2. Hydraulic filter

6. Install the replacement hydraulic filter and filler cap (Figure 55) and torque bolt on top to 110 to 140 in-lb (13 to 15.5 N-m).
7. Clean up any spilled fluid.
8. Install the top cover.

Changing the Hydraulic Fluid

Service Interval: Every 400 hours/Yearly (whichever comes first)

Hydraulic Fluid Specification:

Use only one of the following fluids in the hydraulic system:

- **Toro Premium Transmission/Hydraulic Tractor Fluid** (refer to your Authorized Toro Dealer for more information)

- **Toro Premium All Season Hydraulic Fluid** (refer to your Authorized Toro Dealer for more information)
- If either of the above Toro fluids are not available, you may use another **Universal Tractor Hydraulic Fluid (UTHF**), but they must be only **conventional, petrolium-based** products. The specifications must fall within the listed range for all of the following material properties and the fluid should meet the listed industry standards. Check with your oil supplier to determine if the oil meets these specifications.

  Note: Toro will not assume responsibility for damage caused by improper substitutions, so use only products from reputable manufacturers who will stand behind their recommendations.

Material Properties	
Viscosity, ASTM D445	cSt at 40 degrees C: 55 to 62
	cSt at 100 degrees C: 9.1 to 9.8
Viscosity index, ASTM D2270	140 to 152
Pour Point, ASTM D97	-35 to -46 degrees F (-37 to -43 degrees C)
Industry Standards	
API GL-4, AGCO Powerfluid 821 XL, Ford New Holland FNHA-2-C-201.00, Kubota UDT, John Deere J20C, Vickers 35VQ25 and Volvo WB-101/BM.	

Note: Many hydraulic fluids are almost colorless, making it difficult to spot leaks. A red dye additive for the hydraulic system oil is available in 2/3 oz (20 ml) bottles. One bottle is sufficient for 4-6 gal (15-22 l) of hydraulic oil. Order part no. 44-2500 from your Authorized Toro Dealer.

1. Position the machine on a level surface.
2. Lower the grinder.
3. Stop the engine, remove the key, and wait for all moving parts to stop before leaving the operating position.
4. Allow the machine to cool completely.
5. Remove the top cover.
6. Remove the hydraulic tank filler cap and filter (Figure 55).
7. Place a drain pan capable of hold 10 US Gallons (37.8 l) under the hydraulic tank.
8. Pinch the hose clamp and slide the clamp and hose off of the fitting on the hydraulic tank, allowing the hydraulic fluid to drain from the hose and tank into the pan.

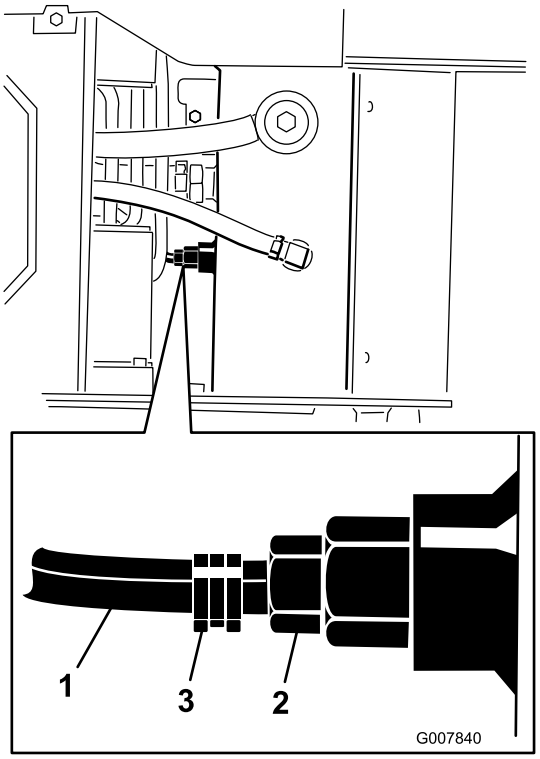

Figure 56

1. Hose
2. Hydraulic tank fitting
3. Hose clamp

9. When finished, install the hose onto the fitting and secure it with the hose clamp.

   Note: Dispose of the used oil at a certified recycling center.

10. Fill the hydraulic tank with approximately 6 US gallons (23 l) of hydraulic fluid as specified previously.
11. Add 8 fl oz (236 ml) of AMSOIL® Slip-Lock™ differential additive or an equivalent differential additive to the hydraulic tank.

    Note: AMSOIL and Slip-Lock are trademarks of AMSOIL Inc.

12. Install the hydraulic filter and filler cap (Figure 55) and torque bolt on top to 110 to 140 in-lb (13 to 15.5 N-m).
13. Start the engine and let it run for a few minutes.
14. Stop the engine.
15. Check the hydraulic fluid level and top it off if necessary; refer to Checking Hydraulic Fluid.
16. Clean up any spilled fluid.
17. Install the top cover.

Checking the Hydraulic Lines

Service Interval: Every 100 hours—Check the hydraulic lines for leaks, loose fittings, kinked lines, loose mounting supports, wear, weather, and chemical deterioration and repair if necessary.

Every 1,500 hours/Every 2 years (whichever comes first)—Replace all moving hydraulic hoses.

⚠ WARNING

Hydraulic fluid escaping under pressure can penetrate skin and cause injury. Fluid injected into the skin must be surgically removed within a few hours by a doctor familiar with this form of injury or gangrene may result.

- **Keep your body and hands away from pin hole leaks or nozzles that eject high pressure hydraulic fluid.**
- **Use cardboard or paper to find hydraulic leaks, never use your hands.**

Grinder Maintenance

Replacing the Teeth

Service Interval: Before each use or daily—Check the condition of the teeth and rotate or replace any that are worn or damaged.

Due to the high amount of wear placed on the teeth, you will need to rotate and replace them periodically.

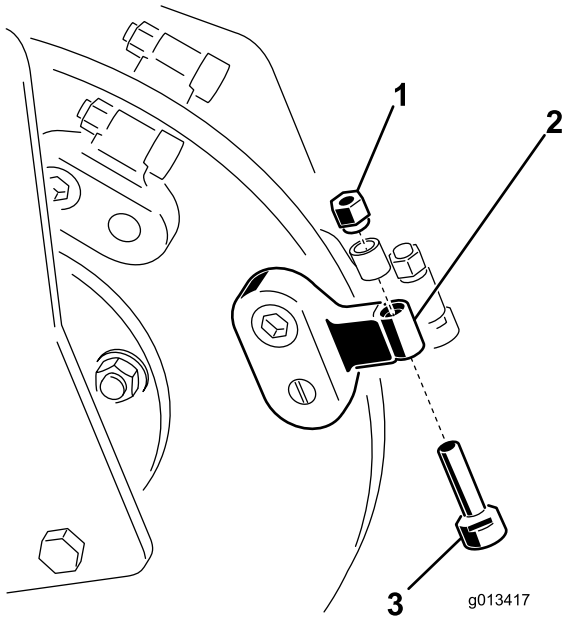

Figure 57

1. Nut
2. Tooth holder
3. Tooth

Each tooth is indexed with three positions so you can rotate it twice, exposing a new sharp edge before replacing the tooth. To rotate a tooth, loosen the nut securing the tooth (Figure 57). Push the tooth forward and rotate it one third of a turn, bringing an unused edge to the outside. Torque the nut securing the toothth to 27 to 33 ft-lb (37 to 45 N-m).

To replace a tooth, remove the nut securing the tooth to remove it, then install a new tooth and nut in the same position (Figure 57). Torque the nut securing the toothth to 27 to 33 ft-lb (37 to 45 N-m).

Cleaning

Removing Debris from the Machine

Important: Operating the engine with blocked screens, dirty or plugged cooling fins, and/or cooling shrouds removed, will result in engine damage from overheating.

1. Lower the grinder.
2. Stop the engine, remove the key, and wait for all moving parts to stop before leaving the operating position.
3. Wipe away debris from the air cleaner.
4. Clean any debris build-up on the engine with a brush or blower.

   Important: It is preferable to blow dirt out, rather than washing it out. If water is used, keep it away from electrical items and hydraulic valves. Do not use a high-pressure washer. High-pressure washing can damage the electrical system and hydraulic valves or deplete grease.
5. Clean debris from the oil cooler.

Storage

1. Lower the grinder.
2. Stop the engine, remove the key, and wait for all moving parts to stop before leaving the operating position.
3. Remove dirt and grime from the external parts of the entire machine, especially the engine. Clean dirt and chaff from the outside of the engine cylinder head fins and blower housing.

   Important: You can wash the machine with mild detergent and water. Do not pressure wash the machine. Avoid excessive use of water, especially near the control panel, engine, hydraulic pumps, and motors.
4. Service the air cleaner; refer to Servicing the Air Cleaner (page 23).
5. Grease the machine; refer to Greasing the Machine (page 23).
6. Change the engine oil; refer to Servicing the Engine Oil (page 24).
7. Remove the spark plug and check the condition of it; refer to Servicing the Spark Plug (page 25).
8. For storage over 30 days, prepare the machine as follows:
   A. Add a petroleum based stabilizer/conditioner to fuel in the tank. Follow mixing instructions from stabilizer manufacturer. (1 oz. per US gallon). **Do not use an alcohol based stabilizer (ethanol or methanol).**

      Note: Fuel stabilizer/conditioner is most effective when mixed with fresh gasoline and used at all times.

   B. Run the engine to distribute conditioned fuel through the fuel system (5 minutes).
   C. Stop the engine, allow it to cool and drain the fuel tank using a pump type syphon.
   D. Restart the engine and run it until it stops.
   E. Choke the engine.
   F. Start and run the engine until it will not start again.
   G. Dispose of fuel properly. Recycle as per local codes.

   Important: Do not store stabilizer/conditioned gasoline over 90 days.
9. With the spark plug removed from the engine, pour two tablespoons of engine oil into the spark plug hole.

10. Place a rag over the spark plug hole to catch any oil spray, then use the starter or recoil handle to crank the engine and distribute the oil inside the cylinder.
11. Install the spark plug, but do not install the wire on the spark plug.
12. Charge the battery; refer to Servicing the Battery (page 28).
13. Check and adjust the track tension; refer to Checking and Adjusting the Track Tension (page 30).
14. Check and tighten all bolts, nuts, and screws. Repair or replace any part that is damaged.
15. Paint all scratched or bare metal surfaces. Paint is available from your Authorized Service Dealer.
16. Store the machine in a clean, dry garage or storage area. Remove the key from the ignition switch and keep it in a memorable place.
17. Cover the machine to protect it and keep it clean.

Troubleshooting

Problem	Possible Cause	Corrective Action
The starter does not crank.	1. The battery is discharged. 2. The electrical connections are corroded or loose. 3. The relay or switch is damaged.	1. Charge the battery or replace it. 2. Check the electrical connections for good contact. 3. Contact your Authorized Service Dealer.
The engine will not start, starts hard, or fails to keep running.	1. The fuel tank is empty. 2. The fuel shutoff valve is closed. 3. The controls are not in neutral. 4. The choke is not on. 5. The air cleaner is dirty. 6. The spark plug wire is loose or disconnected. 7. The spark plug is pitted, fouled, or the gap is incorrect. 8. Dirt, water, or stale fuel is in fuel system.	1. Fill the fuel tank with gasoline. 2. Open the fuel shutoff valve. 3. Move the controls to neutral. 4. Move the choke lever fully forward. 5. Clean or replace the air cleaner elements. 6. Install the wire on the spark plug. 7. Install a new, correctly gapped spark plug. 8. Contact your Authorized Service Dealer.
Engine loses power.	1. The engine load is excessive. 2. The air cleaner is dirty. 3. The oil level in crankcase is low. 4. The cooling fins and air passages under the engine blower housing are plugged. 5. The spark plug is pitted, fouled, or the gap is incorrect. 6. Dirt, water, or stale fuel is in fuel system.	1. Reduce ground speed. 2. Clean or replace the air cleaner elements. 3. Check and add oil to the crankcase. 4. Remove any obstructions from the cooling fins and air passages. 5. Install a new, correctly gapped spark plug. 6. Contact your Authorized Service Dealer.
The engine overheats.	1. The engine load is excessive. 2. The oil level in crankcase is low. 3. The cooling fins and air passages under the engine blower housing are plugged.	1. Reduce ground speed. 2. Check and add oil to the crankcase. 3. Remove any obstructions from the cooling fins and air passages.
Abnormal vibration.	1. The engine mounting bolts are loose.	1. Tighten the engine mounting bolts.
The machine does not drive.	1. The hydraulic fluid level is low. 2. The tow valves are open. 3. The hydraulic system is damaged.	1. Check and add hydraulic fluid. 2. Close the tow valves. 3. Contact your Authorized Service Dealer.
The grinder does not turn	1. A chunk of wood or a rock is caught in the grinder. 2. The grinder drive system is damaged. 3. The hydraulic system is obstructed, contaminated, or damaged.	1. Stop the engine and remove the obstruction with a stick. 2. Contact your Authorized Service Dealer. 3. Contact your Authorized Service Dealer.
The grinder does not cut fast enough	1. The teeth are worn. 2. The hydraulic system is overheated. 3. The hydraulic system is obstructed, contaminated, or damaged.	1. Rotate or replace the teeth. 2. Shutdown and allow the system to cool. 3. Contact your Authorized Service Dealer.

Schematics

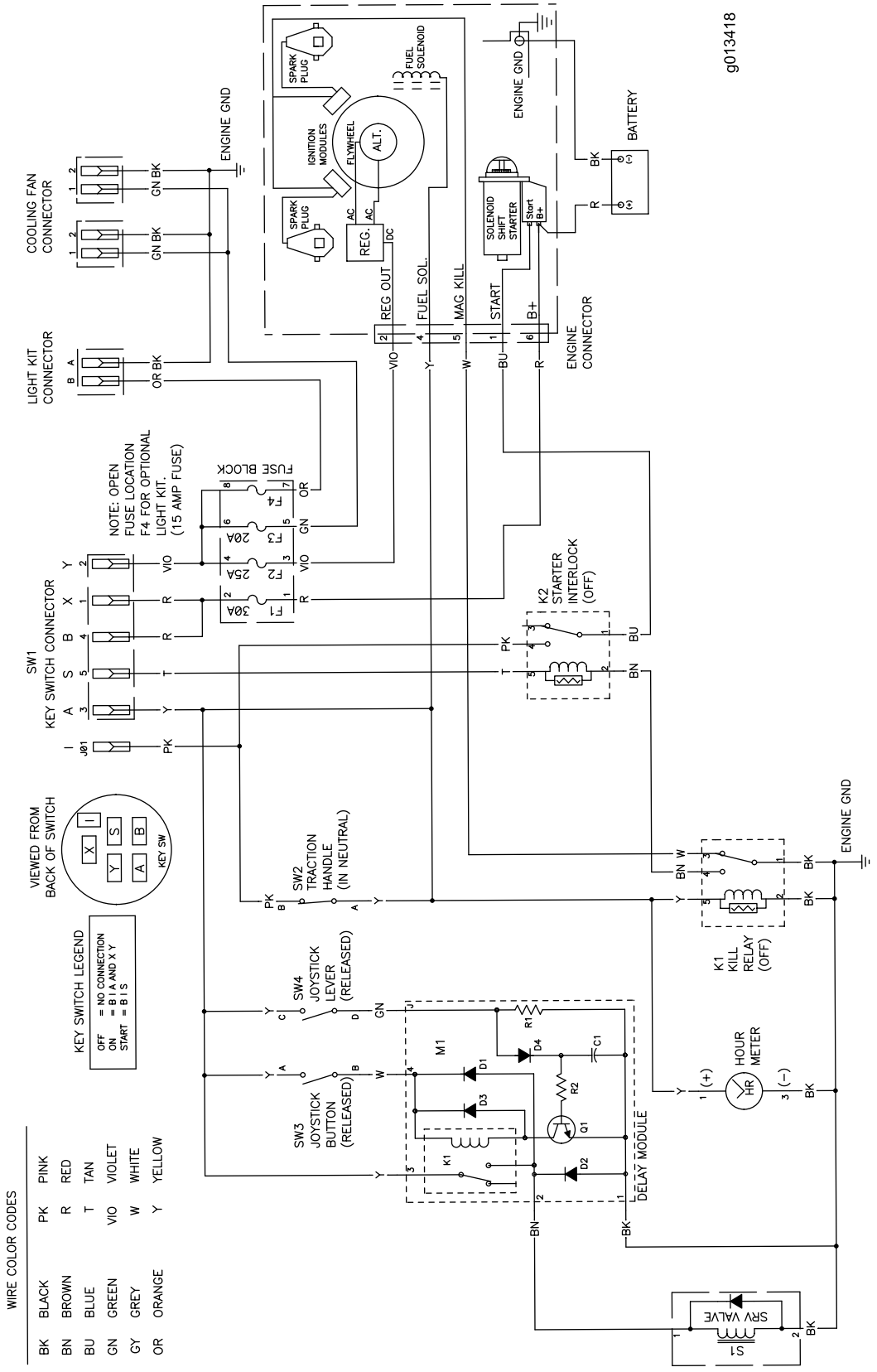

Electrical Schematic (Rev. A)

DISPLACEMENT AND PRESSURE CHART						
COMPONENT	DISPLACEMENT		PRESSURE		FLOWRATE*	
COMPONENT	CU IN/REV	CU CM/REV	PSI	BARS	GPM	LPM
P1	.89	14.5	3625	250	13.5	51.1
P2	.12	2.0	3625	250	1.9	7.0
P3, P4	.61	10.0	2100	145	9.5	36.0
M1	2.5	41	-----	-----	-----	-----
M2, M3	17.1	280	-----	-----	-----	-----
RV1	-----	-----	2900	200	-----	-----
RV2	-----	-----	500	35	-----	-----
RV3	-----	-----	2030	140	-----	-----
RV4	-----	-----	1000	69	-----	-----
CBV1, CBV2	-----	-----	1000	69	-----	-----

* FLOWRATE IS THEORETICAL. IT IS CALCULATED USING ENGINE SPEED OF 3600 RPM. IT DOES NOT ACCOUNT FOR COMPONENT EFFICIENCIES.

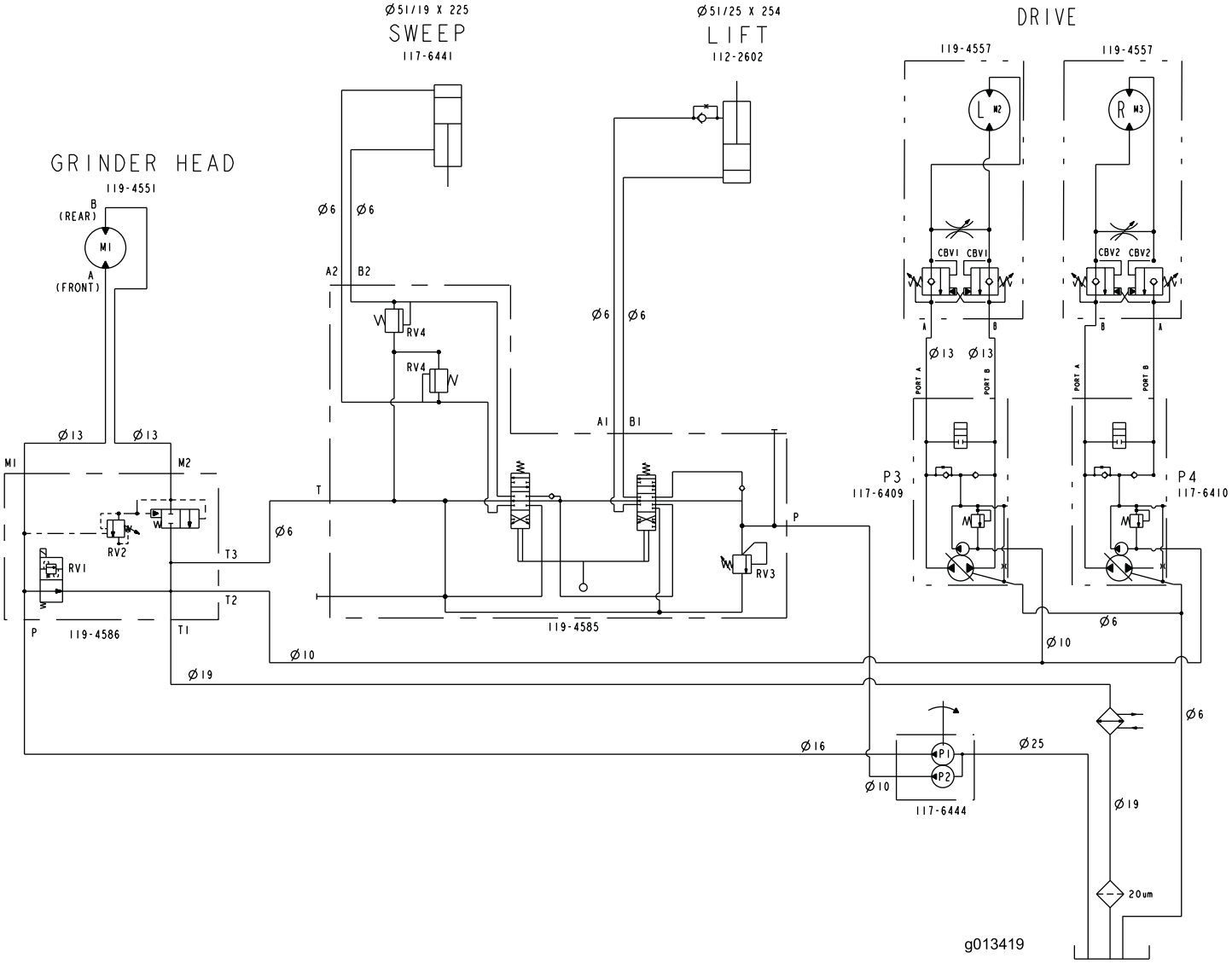

Hydraulic Schematic (Rev. A)

Notes:

Toro Compact Utility Equipment Warranty

A One-Year Limited Warranty

CUE Products

Conditions and Products Covered

The Toro® Company and its affiliate, Toro Warranty Company, pursuant to an agreement between them, jointly warrant your Toro Compact Utility Equipment ("Product") to be free from defects in materials or workmanship. The following time periods apply from the date of purchase:

Products	Warranty Period
Loaders, Trenchers, Stump Grinders, Chippers, Log Splitters and Attachments	1 year or 1000 operating hours, whichever occurs first
Kohler Engines	3 years
All other Engines	2 years

Where a warrantable condition exists, we will repair the Product at no cost to you including diagnosis, labor, and parts.

Instructions for Obtaining Warranty Service

If you think that your Toro Product contains a defect in materials or workmanship, follow this procedure:

1. Contact any Authorized Toro Compact Utility Equipment (CUE) Service Dealer to arrange service at their dealership. To locate a dealer convenient to you, access our website at www.Toro.com. You may also call our Toro Customer Care Department toll free at 888-865-5676 (U.S. customers) or 888-865-5691 (Canadian customers).
2. Bring the product and your proof of purchase (sales receipt) to the Service Dealer.
3. If for any reason you are dissatisfied with the Service Dealer's analysis or with the assistance provided, contact us at:

   LCB Customer Care Department
   Toro Warranty Company
   8111 Lyndale Avenue South
   Bloomington, MN 55420-1196
   Toll Free: 888-865-5676 (U.S. customers)
   Toll Free: 888-865-5691 (Canada customers)

Owner Responsibilities

You must maintain your Toro Product by following the maintenance procedures described in the *Operator's Manual*. Such routine maintenance, whether performed by a dealer or by you, is at your expense. Parts scheduled for replacement as required maintenance ("Maintenance Parts"), are warranted for the period of time up to the scheduled replacement time for that part. Failure to perform required maintenance and adjustments can be grounds for disallowing a warranty claim.

Items and Conditions Not Covered

Not all product failures or malfunctions that occur during the warranty period are defects in materials or workmanship. This express warranty does not cover the following:

- Product failures which result from the use of non-Toro replacement parts, or from installation and use of add-on, modified, or unapproved accessories
- Product failures which result from failure to perform required maintenance and/or adjustments
- Product failures which result from operating the Product in an abusive, negligent or reckless manner
- Parts subject to consumption through use unless found to be defective. Examples of parts which are consumed, or used up, during normal Product operation include, but are not limited to, teeth, tines, blades, spark plugs, tires, tracks, filters, chains, etc.
- Failures caused by outside influence. Items considered to be outside influence include, but are not limited to, weather, storage practices, contamination, use of unapproved coolants, lubricants, additives, or chemicals, etc.
- Normal "wear and tear" items. Normal "wear and tear" includes, but is not limited to, worn painted surfaces, scratched decals or windows, etc.
- Any component covered by a separate manufacturer's warranty
- Pickup and delivery charges

General Conditions

Repair by an Authorized Toro Compact Utility Equipment (CUE) Service Dealer is your sole remedy under this warranty.

Neither The Toro® Company nor Toro Warranty Company is liable for indirect, incidental or consequential damages in connection with the use of the Toro Products covered by this warranty, including any cost or expense of providing substitute equipment or service during reasonable periods of malfunction or non-use pending completion of repairs under this warranty. All implied warranties of merchantability and fitness for use are limited to the duration of this express warranty. Some states do not allow exclusions of incidental or consequential damages, or limitations on how long an implied warranty lasts, so the above exclusions and limitations may not apply to you.

This warranty gives you specific legal rights, and you may also have other rights which vary from state to state.

Except for the engine warranty coverage and the Emissions warranty referenced below, if applicable, there is no other express warranty. The Emissions Control System on your Product may be covered by a separate warranty meeting requirements established by the U.S. Environmental Protection Agency (EPA) or the California Air Resources Board (CARB). The hour limitations set forth above do not apply to the Emissions Control System Warranty. Refer to the California Emission Control Warranty Statement supplied with your Product or contained in the engine manufacturer's documentation for details.

Countries Other than the United States or Canada

Customers who have purchased Toro products exported from the United States or Canada should contact their Toro Distributor (Dealer) to obtain guarantee policies for your country, province, or state. If for any reason you are dissatisfied with your Distributor's service or have difficulty obtaining guarantee information, contact the Toro importer. If all other remedies fail, you may contact us at Toro Warranty Company.