FORM NO. 3319–521

TORO®

MODEL NO. 30504 — 70121 & UP

INSTALLATION INSTRUCTIONS

9 CU. FT. HOPPER KIT

Groundsmaster® 223D, 225 &1000L with 52" & 62" Decks

⚠ SAFETY INSTRUCTIONS

BEFORE OPERATING

1. Read and understand the contents of this manual before starting and operating the machine. Become familiar with all controls and know how to stop quickly. A free replacement manual is available by sending complete Model and Serial Numbers to:

The Toro Company
8111 Lyndale Avenue South
Minneapolis, Minnesota 55420

2. Never allow children to operate the machine. Do not allow adults to operate the machine without proper instruction. Only trained operators, skilled in slope operation and who have read this manual should operate this machine.

3. Never operate machine when under the influence of drugs or alcohol.

4. Remove all debris or other objects that might be picked up and thrown by cutter blades. Keep all bystanders away from the operating area.

5. Keep all shields and safety devices in place. If a shield, safety device, or decal is defective or damaged, repair or replace it before operation is commenced. Also, tighten any loose nuts, bolts, and screws to insure machine is in safe operating condition.

6. Do not wear loose–fitting clothing because it could get caught in moving parts. Always wear long pants and substantial shoes. Wearing safety glasses, safety shoes, and a helmet is advisable and required by some local ordinances and insurance regulations.

7. Be sure interlock switches are adjusted correctly so engine cannot be started unless traction pedal is released–neutral position–and PTO switch is in DISENGAGED position.

8. Fill fuel tank before starting the engine. Avoid spilling any fuel. Since fuel is flammable, handle it carefully.

A. Use an approved fuel container.

B. Do not fill fuel tank when engine is hot or running.

C. Do not smoke while handling fuel.

D. Fill fuel tank outdoors and up to about one inch (25 mm) from the top of the tank, not the filler neck.

E. Wipe up any spilled fuel.

WHILE OPERATING

9. Sit on the seat when starting the engine and operating the machine.

10. Always make sure seat pivot retaining pin is installed.

11. Before starting the engine:

A. Engage parking brake.

B. Make sure traction pedal is in neutral and PTO is in DISENGAGE position.

C. After engine is started, release parking brake and keep foot off traction pedal. Machine must not move. If movement is evident, the neutral return mechanism is adjusted incorrectly. Shut engine off and adjust until machine does not move when traction pedal is released.

12. Do not run the engine in a confined area without adequate ventilation. Exhaust fumes are hazardous and could possibly be deadly.

13. Maximum seating capacity is one person. Therefore, never carry passengers.

14. Check carefully for overhead clearances before driving under any objects.

15. The grass deflector or complete blower assembly must always be installed on cutting unit.

16. Operator must be skilled and trained in how to drive on hillsides. Failure to use caution on slopes or hills may cause loss of control and vehicle to tip or roll possibly resulting in personal injury or death.

17. Traverse slopes carefully. Do not start or stop suddenly when traversing slopes or when traveling uphill or downhill.

18. If engine stalls or machine loses headway and cannot make it to the top of a slope, do not turn machine around. Always back slowly straight down the slope.

19. Using the machine demands the operator's complete attention. To prevent loss of control:

A. Operate only in daylight or when there is good artificial light.

B. Drive slowly.

C. Avoid sudden stops and starts.

D. Look behind machine before backing up.

E. Watch for holes or other hidden hazards.

© The TORO Company — 1997

SAFETY INSTRUCTIONS

F. Do not drive close to a sand trap, ditch, creek, or hazard.

G. Reduce speed when making sharp turns and when turning on a hillside.

H. The cutting deck must be lowered when going down slopes for steering control.

20. The grass deflector must always be installed and in lowest position on the cutting unit when blower assembly is removed. This product is designed to drive objects into the ground where they lose energy quickly in grassy areas. However. don't take an injury risk!! When a person or pet appears unexpectedly in or near the mowing area, STOP MOWING. Careless operation, combined with terrain angles, ricochets, or improperly positioned guards, can lead to thrown object injuries. Do not resume mowing until area is cleared.

21. Never raise the cutting unit while the blades or other parts are rotating.

22. If cutting blades strike a solid object or the machine vibrates abnormally, disengage PTO, move throttle to SLOW, set parking brake, and shut engine off. Remove key from switch to prevent possibility of accidental starting. Check cutting unit, blower assembly and traction unit for damage and defective parts. Repair any damage before restarting the engine and operating the cutting unit. Assure cutting unit blades are in good condition and blade bolts are torqued to proper specifications (See Cutting Deck Operator's Manual).

23. If the cutting unit discharge area or blower assembly ever plugs, disengage PTO and shut engine off before removing the obstruction.

24. To stop machine, remove foot from traction pedal and use brakes. Gradually reversing the traction pedal can provide additional braking.

25. Do not touch engine, muffler, or radiator while engine is running or soon after it has stopped. These areas could be hot enough to cause a burn.

26. Before getting off the seat:

A. Move traction pedal to neutral position and remove foot from pedal.

B. Set the parking brake and disengage the PTO.

C. Shut the engine off and remove key from ignition switch. Wait for all movement to stop before getting off the seat.

27. Never operate collection system with hopper covers open.

MAINTENANCE

28. Remove key from ignition switch to prevent accidental starting of the engine when servicing, adjusting, or storing the machine.

29. Stay away from hopper and hopper linkage during operation.

30. Do not walk under hopper or service machine unless hopper is fully raised and empty, with hydraulic lines disconnected at quick couplers or fully lowered.

31. Do not remove any hydraulic line unless hopper is fully lowered or fully raised and empty.

32. If major repairs are ever needed or assistance is desired, contact an Authorized TORO Distributor.

33. To reduce potential fire hazard, keep the engine free of excessive grease, grass, leaves, and accumulations of dirt.

34. Make sure machine is in safe operating condition by keeping nuts, bolts, and screws tight. Check all cutting unit blade mounting bolts frequently to assure they are torqued to proper specifications (See Cutting Deck Operator's Manual).

35. Make sure all hydraulic line connectors are tight, and all hydraulic hoses and lines are in good condition before applying pressure to the system.

36. Keep body and hands away from pin hole leaks or nozzles that eject hydraulic fluid under high pressure. Use paper or cardboard, not hands, to search for leaks. Hydraulic fluid escaping under pressure can have sufficient force to penetrate skin and do serious damage. If fluid is ejected into the skin, it must be surgically removed within a few hours by a doctor familiar with this form of injury or gangrene may result.

37. Before disconnecting or performing any work on the hydraulic system, all pressure in system must be relieved by stopping engine and lowering implement to the ground.

38. If the engine must be running to perform maintenance or an adjustment, keep clear of PTO shaft, cutting unit blades, and other moving parts.

39. At the time of manufacture, the machine conformed to safety standards in effect for riding mowers. To ensure optimum performance and continued safety certification of the machine, use genuine TORO replacement parts and accessories. Replacement parts and accessories made by other manufacturers may result in non—conformance with the safety standards, and the warranty may be voided.

SAFETY AND INSTRUCTION DECALS

CAUTION
KEEP HANDS OUT OF DISCHARGE AREA

ON BOTH SIDES OF GRASS BAG HOOD
(Part No. 43–1100)

LOOSE PARTS CHART

Note: Use this chart as a checklist to assure all parts necessary for assembly have been received. Without these parts, total set-up cannot be completed. Some parts may have already been assembled at factory.

DESCRIPTION	QTY.	USE
Template (GM 220 only) Capscrew 3/8–16 x 2" lg. Capscrew 3/8–16 x 1–1/4" lg. Washer 3/8 Locknut 3/8–16 Lockwasher 3/8 Mounting Bracket (52" deck) Mounting Bracket (62" deck)	1 1 7 8 8 2 4 4	Install Mounting Brackets
Lower Support Tube Assembly Capscrew 3/8–16 x 2–1/4" lg. Locknut 3/8–16	1 4 4	Mount Lower Support Tube Assembly
Upper Support Tube Assembly Capscrew 5/16–18 x 2–1/4" lg. Locknut 5/16–18	1 2 2	Mount Upper Support Tube Assembly
Hood Assembly Capscrew 5/16–18 x 3/4" lg. Locknut 5/16–18 Hinge Pin Hood Stop Spacer Washer 5/16" I.D. x 1–1/4" O.D. Capscrew 5/16–18 x 7/8" lg. Locknut 5/16–18 Washer 5/16	1 2 2 1 2 2 4 2 2 2	Mount Hood
Chute Extension Nut Plate Button Head Screw	1 2 4	Install Chute Extension Between Chute and Hood
Cloth Bag	1	Install Cloth Bag
Installation Instructions Parts Catalog	1 1	

OPTIONAL EQUIPMENT

Cloth Bag (38"–13 cu. ft.)	Part No. 43–0980
Retianer Cord (38" Bag)	Part No. 36–7770

SET–UP INSTRUCTIONS

INSTALL GRASS CATCHER BRACKETS ON GROUNDSMASTER 220

IMPORTANT: Before drilling holes in frame, fuel tank must be removed. Fuel tank removal not only prevents possible damage when drilling, but also eases the installation of the mounting brackets.

1. Cut out template and tape to right side of machine (Fig. 1).

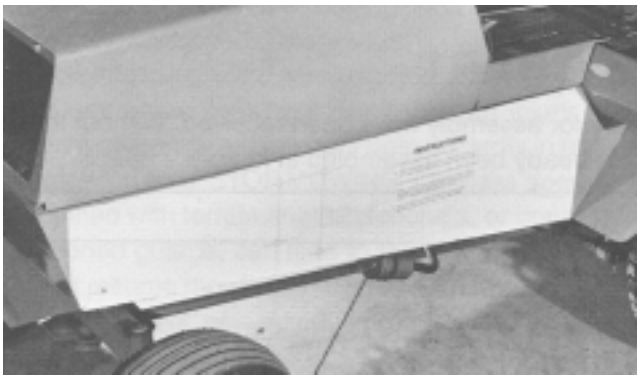

Figure 1

2. Mount and drill (8) 13/32” dia. holes at locations shown on template.

3. Using appropriate brackets and mounting holes, position brackets as shown in figure 2.

Note: Wide brackets are used for 62” decks and narrow brackets, shown in figure 2, are for 52” decks.

4. Mount brackets to frame with (1) 3/8–16 x 2” lg. capscrew, (7) 3/8–16 x 1–1/4” lg. capscrews, (8) 5/16 washers and (8) locknuts. Use 2” lg. capscrew to secure bottom of rear bracket.

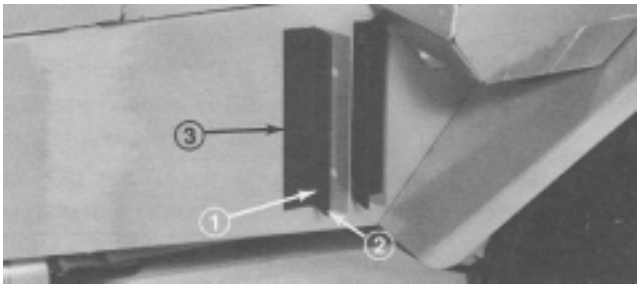

Figure 2
1. **Capscrew, flatwasher and locknut**
2. **Mounting bracket**
3. **Lockwasher (2 top holes, front bracket)**

5. Reinstall fuel tank. Refer to operators manual for instructions.

INSTALL GRASS CATCHER BRACKETS ON GROUNDSMASTER 223D, 225 & 1000L

1. Position brackets over existing mounting holes as shown in figure 3. Mount brackets using (1) 3/8–16 x 2” lg. capscrew, (7) 3/8–16 x 1–1/4” lg. capscrews, (8) 3/8 washers, (6) locknuts and (2) lockwashers.

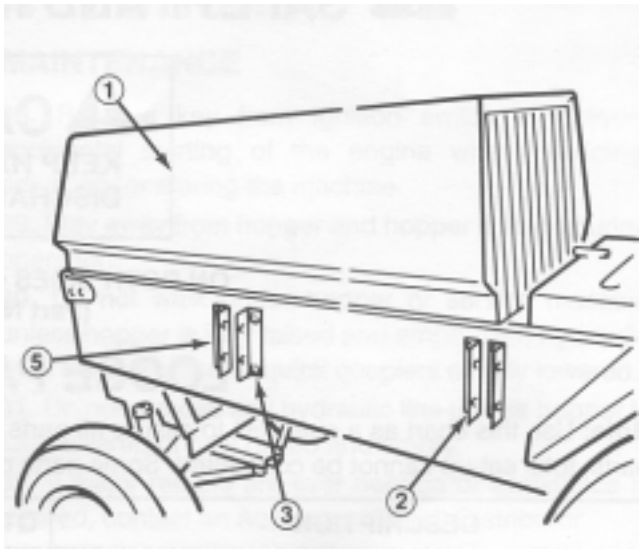

Figure 3
1. **Groundsmaster 223D, 225 & 1000L**
2. **Mounting brackets**
3. **Capscrew, washer and locknut**

Note: Wide brackets are used for 62” decks and narrow brackets, shown in figure 2, are for 52” decks.

INSTALL GRASS CATCHER

1. Mount lower support tube assembly to brackets with (4) 3/8–16 x 2–1/4” lg. capscrews and locknuts (Fig. 4).

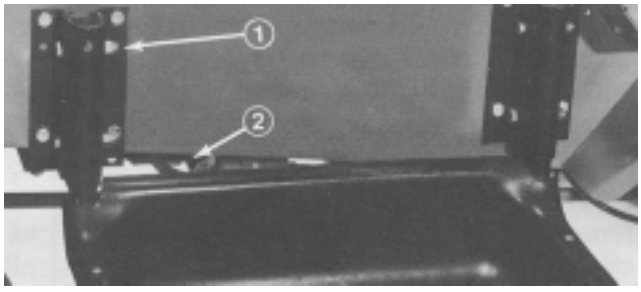

Figure 4
1. **Capscrew and locknut**
2. **Lower support tube assembly**

2. Insert legs of upper support tube assembly into lower support tubes and secure with (2) 5/16–18 x 2–1/4” lg. capscrews and locknuts (Fig. 5).

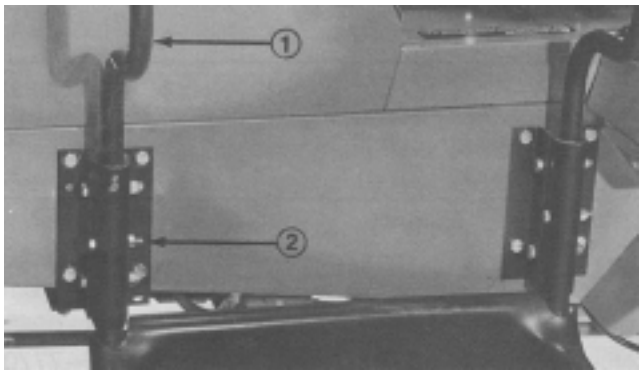

Figure 5
1. **Upper support tube assembly legs**
2. **5/16–18 x 2–1/4” lg. capscrew and locknut**

SET–UP INSTRUCTIONS

3. Connect hood assembly to upper support tube assembly with hinge pin (Fig. 6).

4. Connect hood stops to upper support tube assembly with capscrews and locknuts.

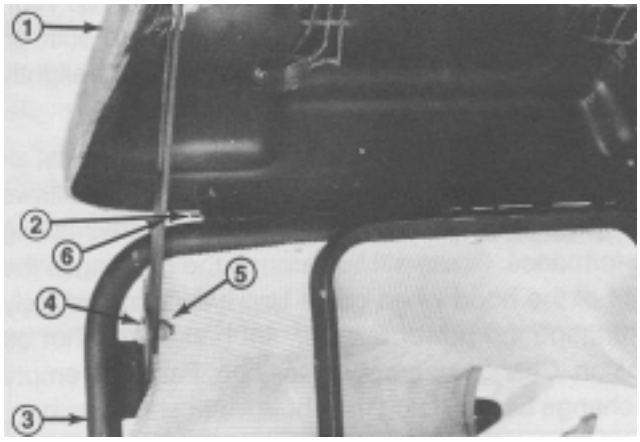

Figure 6

1. Hood assembly
2. Hinge pin
3. Upper support tube assembly legs
4. Capscrew
5. Locknut
6. Hood stop

5. Mount hood stop, spacer and (2) washers to each side of hood with a 5/16–18 x 7/8" lg. capscrew and locknut (Fig. 7).

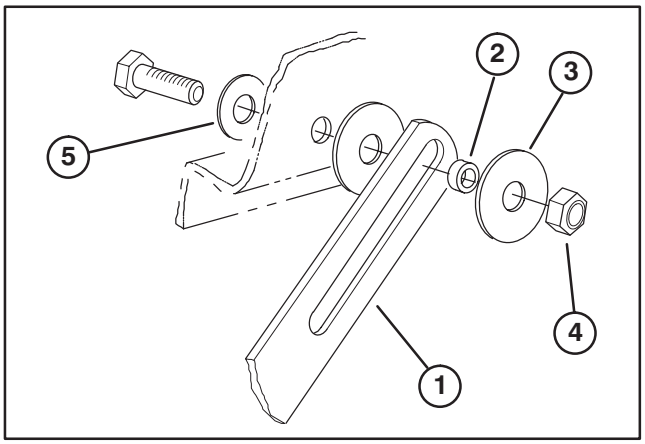

Figure 7

1. Hood stop
2. Spacer
3. Washer
4. Locknut
5. Washer

6. Open hood and position bag around inner frame of upper support tube assembly (Fig. 8).

7. Pull bag drawstring cord tightly around frame to hold bag and secure with metal slip.

(Groundsmaster 223D, 225 & 1000L only)

8. Install chute extension provided with kit. Attach chute extension to grass catcher hood with (2) nut plates, (4) button head screws, using existing mounting holes (Fig. 9)

MOUNT BLOWER HOUSING CHUTE

1. Set deck to desired height–of–cut setting.

2. Slide chute over blower opening and onto mounting studs (Fig. 9).

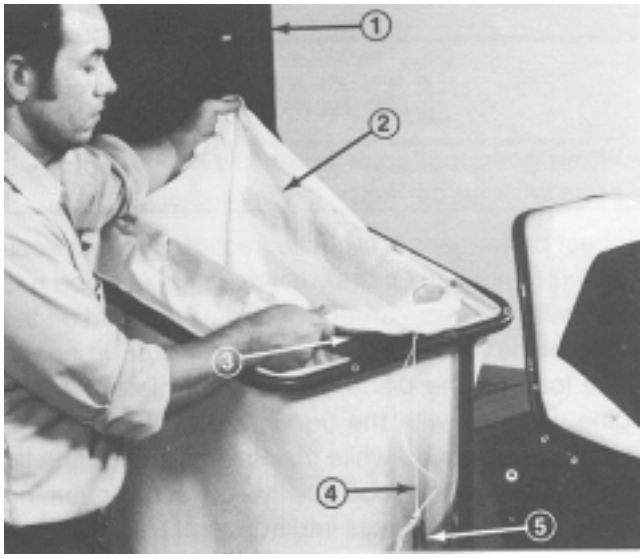

Figure 8

1. Hood
2. Bag
3. Inner frame of upper support tube assembly
4. Bag drawstring
5. Metal clip

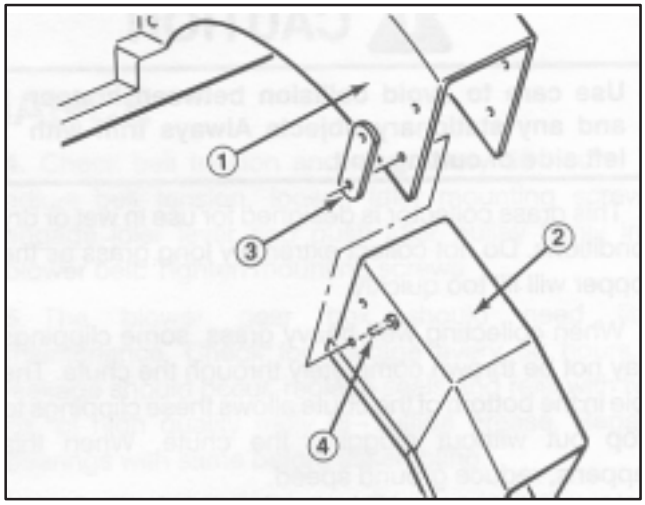

Figure 9

1. Grass catcher hood
2. Chute extension
3. Nut plate
4. Button head screw

3. Lower hopper hood and align chute with snout. Secure chute in position with locknuts and brackets. Wide end of brackets to be positioned toward rear (Fig. 10).

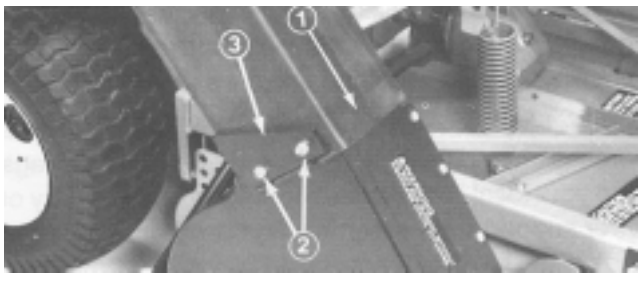

Figure 10

1. Chute 2. Mounting studs 3. Mounting bracket

OPERATING INSTRUCTIONS

OPERATING CHARACTERISTICS

(When used with a 52” or 62” Blower Kit)

CAUTION

When grass collector is removed, NEVER operate without deflector in place.

For best performance, regulate traction pedal to keep engine rpm high and somewhat constant. A good rule to follow is: decrease ground speed as the load on the cutting blade increases; and increase ground speed as the load on the blade decreases. This allows the engine, working with the transmission, to sense the proper ground speed while maintaining high blade tip speed necessary for good quality—of—cut, vacuuming action, and to throw grass into hopper If blower speed drops too low, plugging may result. Refer to Cutting Unit and Traction Unit Operator’s Manual for operation of each.

CAUTION

Use care to avoid collision between hopper and any stationary objects Always trim with left side of cutting unit.

1. This grass collector is designed for use in wet or dry conditions. Do not collect extremely long grass as the hopper will fill too quickly.

2. When collecting wet, heavy grass, some clippings may not be thrown completely through the chute. The hole in the bottom of the chute allows these clippings to drop out without plugging the chute. When this happens, reduce ground speed.

DANGER

Never place hands or feet in chute, blower, or cutting unit.

3. The bumper which protects the blower housing doesn’t extend far enough to eliminate the chance of lower tray or hood striking a stationary object. Stay far enough away from obstructions to avoid collisions. Trim with left side of cutting unit only.

4. To improve productivity, Toro recommends purchasing additional seven or ten bushel grass bags from your local Toro dealer. Store empty bags in tray of lower support tube assembly and drop off filled bags and sealed bags to be collected later.

5. The optional ten bushel grass bags should not be used under extremely wet grass conditions as they may be too heavy to remove easily.

6. Heavy duty lawn trash bags may be used with an optional retainer cord (Toro part no. 36—7770). High winds may cause bottom of empty bags to shift off lower tray. If this happens, mow until bag is slightly filled and re—center on tray.

7. The grass collector hood is designed to exhaust air beside the grass bag rather than through it. This allows the grass bag to fill completely without decreasing performance. Grass will fall through the opening in the front of the hood when grass bag is full. Immediately disengage the power take off, set brake and shut off ignition. Change or empty grass bag. Failure to empty or change bag will plug the chute. After changing bag, check that grass clippings have not fallen into chute.

8. Optional Hi—sail blades (Toro part no. 44—5480) will give improved performance in wet cutting conditions.

9. While operating, check frequently for excessive clippings left on turf or uncut grass. If those conditions occur, the blower or cutting unit may be plugged. Stop unit, disengage PTO, set brake and shut off ignition. Check for obstructions in the chute, blower or cutting unit. Clear any obstruction using a stick or similar tool. Check blower belt tension. If slipping, readjust.

10. Cut grass often, especially when turf growth is rapid. If shorter turf is desired, cut the grass again. Overlap the swaths to produce an even cutting pattern.

IMPORTANT: When transporting unit, tie down grass collector hood or back unit onto truck or trailer to avoid wind throwing hood open and damaging it.

11. To remove blower assembly, shut engine off, disengage idler assembly, unlatch and open belt cover and lift belt off spindle pulley. Close cover. Remove (2) knobs securing blower to mounting brackets and remove blower, belt and chute

12. Reverse procedure to reinstall blower assembly.

CAUTION

When blower is removed, NEVER operate without deflector in place.

MOUNT GRASS DEFLECTOR

1. Remove bumper from carrier frame. Reinstall two lift arm/carrier frame connection capscrews. Torque to 70—80 ft—lb.

OPERATING INSTRUCTIONS

2. Position grass deflector mounts on outside of pivot brackets (included in kit) and secure parts together with capscrews, locknuts and washers previously removed (Fig. 11). Both locknuts must face each other. Tighten locknuts until they are flush against deflector pivots.

3. Slide grass deflector and pivot brackets onto alignment bolts and secure to mounting brackets with knobs and washers. Lift deflector and allow it to drop to check spring tension.

Note: If blower assembly or grass deflector do not easily slide on or off mounting brackets, loosen alignment bolts slightly.

CAUTION

When grass collector is removed, NEVER operate without deflector in place.

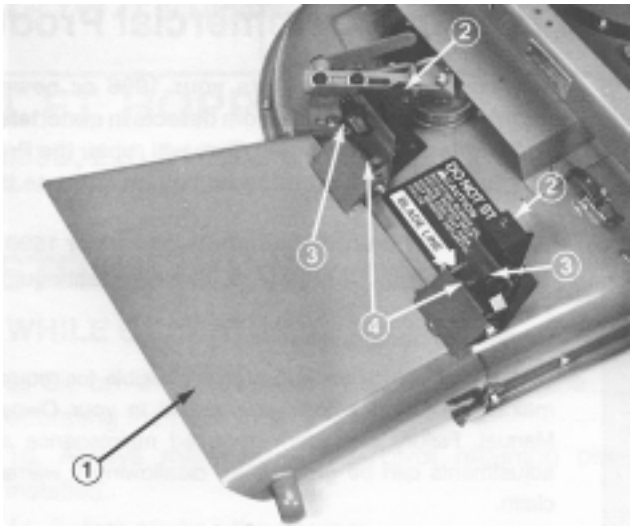

Figure 11

1. Grass deflector
2. Mounting brackets
3. Knob and washer
4. Alignment bolts

MAINTENANCE

1. Keep unit clean, checking that engine is free of dirt and chaff. Make sure all fasteners are tight. Check deflectors, baffles and shields for wear and replace as needed.

2. Check gearbox impeller for tightness every 50 hours. Torque impeller shaft bolt to 220—230 in—lbs.

3. Clean grass clippings from hood, chute, blower and cutting unit after each use. Wash underside of cutting unit daily with hose. An excessive buildup of clippings will impair bagging performance.

4. Check belt tension and wear every 50 hours. To adjust belt tension, loosen idler mounting screws, engage idler lever and push idler pulley firmly into blower belt. Tighten mounting screws

5. The blower gear box should need little maintenance. Check for leakage every 50 hours. If leakage should occur, replace seals and refill with two oz. of high quality moly di—sulfide grease. Repack bearings with same before assembling.

6. Refer to Cutting Unit and Traction Unit Operator's Manuals for service requirements of each.

The Toro Commercial Products Two Year Limited Warranty

The Toro Company warrants your 1996 or newer Toro Commercial Product ("Product") purchased after January 1, 1997, to be free from defects in materials or workmanship for the period of time listed below. Where a warrantable condition exists, Toro will repair the Product at no cost to you including diagnosis, labor, parts, and transportation. This warranty begins on the date the Product is delivered to the original retail purchaser.

Warranty Duration: Two years or 1500 operational hours*, whichever occurs first.
***Product equipped with hour meter**

Owner Responsibilities:

As the Product owner, you are responsible for required maintenance and adjustments stated in your Owner's Manual. Failure to perform required maintenance and adjustments can be grounds for disallowing a warranty claim.

Instructions for Obtaining Warranty Service:

You are responsible for notifying the Commercial Products Distributor or Authorized Commercial Products Dealer from whom you purchased the Product as soon as you believe a warrantable condition exists.

If you need help locating a Commercial Products Distributor or Authorized Dealer, or if you have questions regarding your warranty rights or responsibilities, you may contact us at:

Toro Commercial Products Service Department
8111 Lyndale Avenue South
Minneapolis, MN, 55420—1196
Telephone: (612) 888—8801
Facsimile: (612) 887—8258
E—Mail: Commercial.Service@Toro.Com

Maintenance Parts:

Parts scheduled for replacement as required maintenance ("Maintenance Parts"), are warranted for the period of time up to the scheduled replacement time for that part.

Items/Conditions Not Covered:

Not all product failures or malfunctions that occur during the warranty period are defects in materials or workmanship. The items / conditions listed below are not covered by this warranty:

- Product failures which result from the use of non—Toro replacement parts, or from installation and use of add—on, modified, or unapproved accessories are not covered.
- Product failures which result from failure to perform required maintenance and/or adjustments are not covered.
- Product failures which result from operating the Product in an abusive, negligent or reckless manner are not covered.
- This warranty does not apply to parts subject to consumption through use unless found to be defective. Examples of parts which are consumed, or used up, during normal Product operation include, but are not limited to, blades, reels, bedknives, tines, spark plugs, castor wheels, tires, filters, belts, etc.
- This warranty does not apply to failures caused by outside influence. Items considered to be outside influence include, but are not limited to, weather, storage practices, contamination, use of unapproved coolants, lubricants, additives, or chemicals, etc.
- This warranty does not apply to normal "wear and tear" items. Normal "Wear and Tear" includes, but is not limited to, damage to seats due to wear or abrasion, worn painted surfaces, scratched decals or windows, etc.

Other Legal Disclaimers:

The above remedy of product defects through repair by an authorized distributor or dealer is the purchaser's sole remedy for any defect. This warranty gives you specific legal rights, and you may also have other rights which vary from state to state.

Except for the Emissions warranty referenced below, if applicable, there is no other express warranty. All implied warranties of merchantability and fitness for use are limited to the duration of the express warranty.

Some states do not allow limitations on how long an implied warranty lasts, so the above limitation may not apply to you.

The Toro Company is not liable for indirect, incidental or consequential damages in connection with the use of the Product, including any cost or expense of providing substitute Product or service during periods of malfunction or non—use.

Some states do not allow the exclusion of incidental or consequential damages, so the above exclusion may not apply to you.

Note to California residents: The Emissions Control System on your Product may be covered by a separate warranty meeting requirements established by the U.S. Environmental Protection Agency (EPA), or the California Air Resources Board (CARB). The hour limitations set forth above do not apply to the Emissions Control System Warranty. Refer to the California Emission Control Warranty Statement printed in your Owner's Manual or contained in the engine manufacturer's documentation for details.