FORM NO. 3319−492 REV. A

TORO®

MODEL NO. 03506−70001 & UP
MODEL NO. 03509−70001 & UP

PARTS CATALOG

5 BLADE & 8 BLADE CUTTING UNITS

For Reelmaster® 5100D/5300D Traction Units

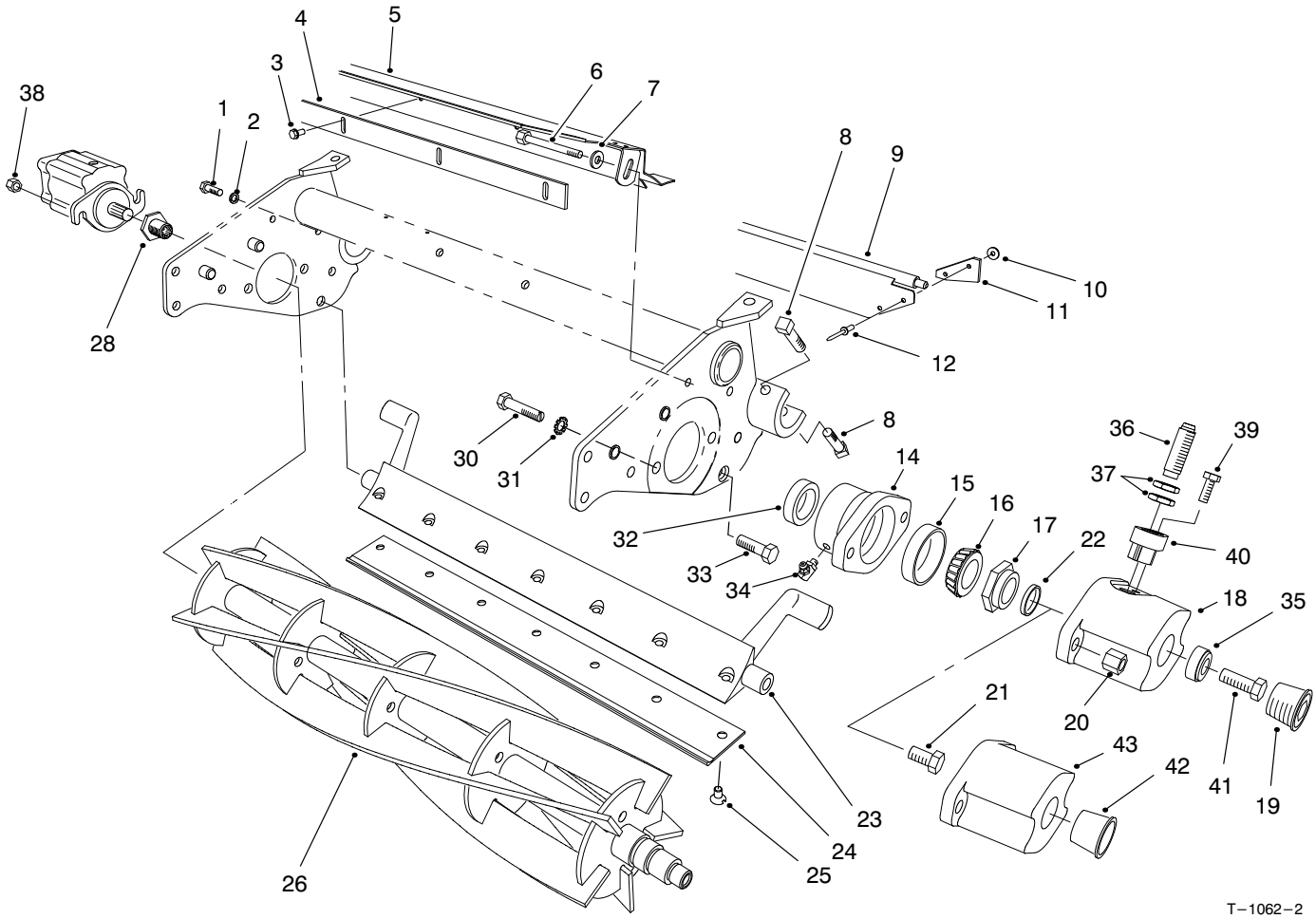

T−1062−2

REEL ASSEMBLY

Ref. No.	Part No.	Description	No. Used
1	322−5	Screw − Cap Hex. Hd.	1
2	3253−4	Washer − Lock	1
3	32144−73	Screw − Self Tapping	5
4	36−7260	Bar − Cutoff	1
5	75−1840	Shield − Grass	1
6	321−23	Screw − Cap Hex. Hd.	2
7	3256−1	Washer − Flat	2
8	3243−13	Screw − Sq. Hd. Set	4
9	75−1560	Deflector − Rear	1
10	3256−49	Washer − Flat	4
11	75−1720	Flap − Rear Shield	2
12	3290−409	Rivet − Pop	4
14	10−5120	Housing − Bearing	2
15	254−72	Cup − Bearing	2
16	254−94	Cone − Bearing	2
17	3296−60	Nut − Reel	1

Ref. No.	Part No.	Description	No. Used
†18	93−8732	Cap − End	1
†19	93−8717	Plug − Hole	1
20	3296−39	Nut − Lock L.H.	2
21	323−2	Screw − Cap Hex. Hd.	1
22	253−61	Seal − Oil	1
23	10−4930	Bedbar	1
24	63−8610	Bedknife	1
25	57−4910	Screw − Bedknife	7
26	14−0659	Reel − 5 Blade	1
*	14−0649	Reel − 8 Blade	1
28	93−1394	Nut − Spline	1
30	57−3210	Screw − Special	4
31	3255−9	Washer − E.T.L.W.	4
32	253−96	Seal − Oil	2
33	217−74	Bolt − Bedbar	2

*Not Illustrated
†Cutting Unit with Speed Sensor

© The TORO Company − 1997
All Rights Reserved

TPS

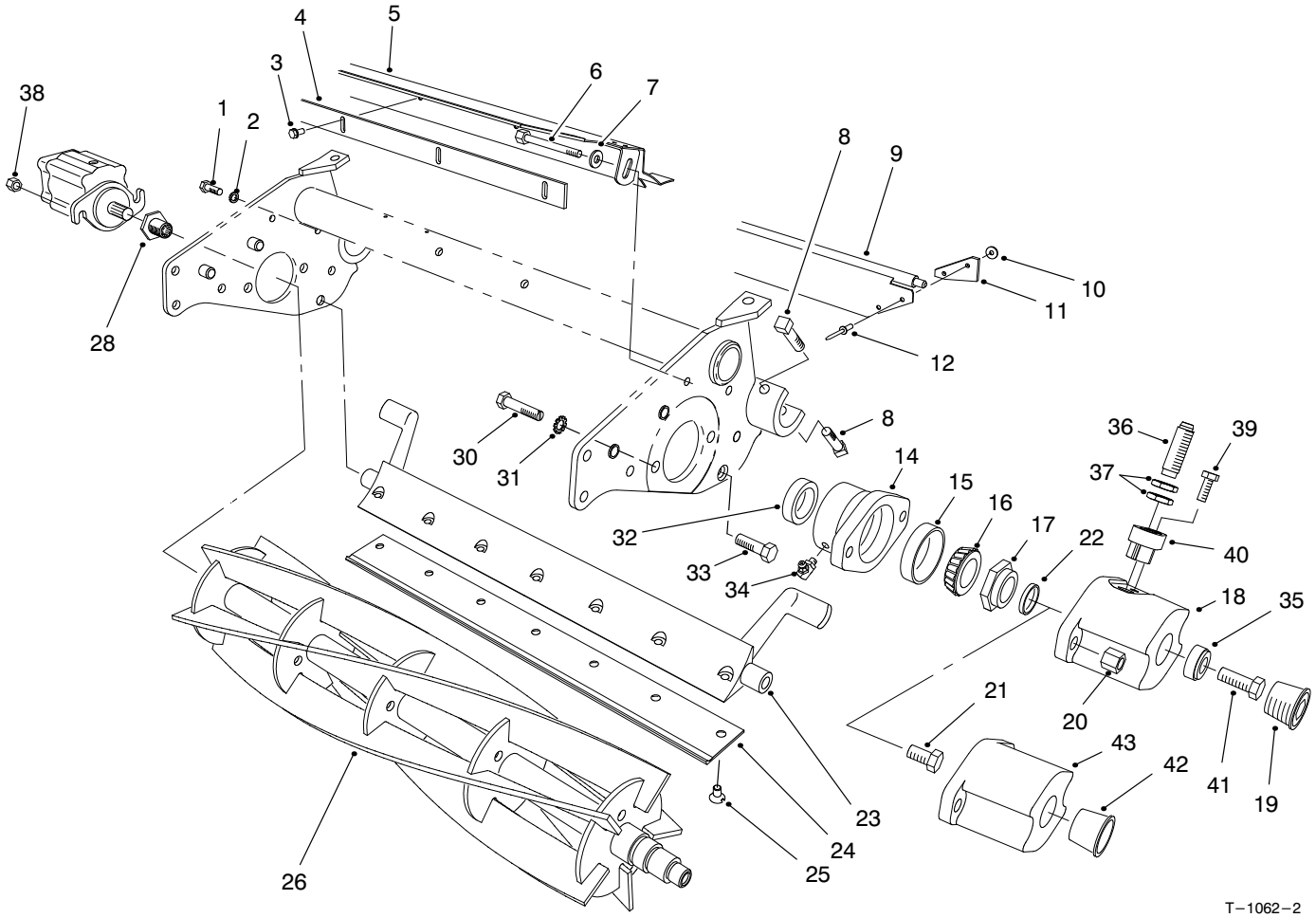

REEL ASSEMBLY (Continued)

Ref. No.	Part No.	Description	No. Used
34	302−60	Fitting − Grease L.H. 90°	1
*	302−11	Fitting − Grease R.H. 45°	1
†35	85−4380	Magnet	2
†36	85−4390	Sensor Assembly (Incl. Ref. #37)	2
†37		Nut − Jam	4
38	32128−36	Nut − Flange Lock R.H.	2

Ref. No.	Part No.	Description	No. Used
†39	3235−20	Screw − Cap Hex. Hd.	1
†40	92−4079	Housing − Sensor	1
†41	30−2120	Screw − Cap Hex. Hd.	1
42	12−0460	Plug − Hole	1
43	10−5080	Cap − End	1

*Not Illustrated
†Cutting Unit with Speed Sensor

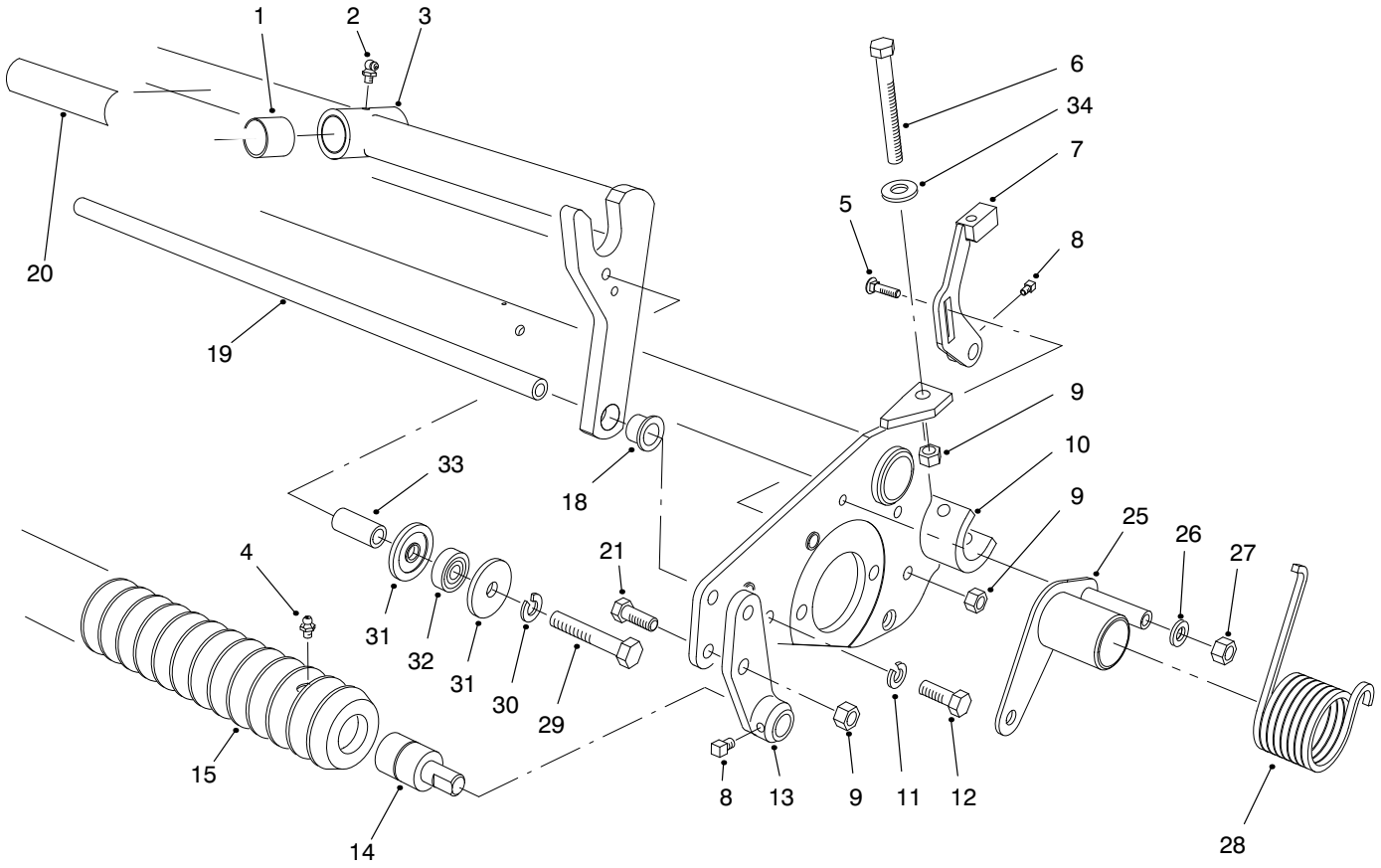

T−1439−1

ROLLER ASSEMBLY

Ref. No.	Part No.	Description	No. Used
1	67−1750	Bushing − Sleeve	2
2	302−60	Fitting − Grease	1
3	75−1600	Carrier Frame Assembly (Incl. Ref. #1, 2 & 18)	1
4	302−5	Fitting − Grease	2
5	3231−2	Bolt − Carriage	2
6	323−49	Screw − Cap Hex. Hd.	2
7	75−1620	Bracket − HOC Rear L.H.	1
*	75−1610	Bracket − HOC Rear R.H.	1
8	3242−2	Screw − Sq. Hd. Set	4
9	3296−39	Nut − Lock	8
10	75−6660	Cutting Unit Frame Assy. (Incl. Ref. #11, 12 & 19)	1
11	3253−21	Washer − Lock	2
12	323−6	Screw − Cap Hex. Hd.	2
13	75−1980	Bracket − HOC Front L.H.	1
*	75−1960	Bracket − HOC Front R.H.	1
14	75−1290	Bearing Assembly	2
15	75−1520	Wiehle Roller Assembly (Incl. Ref. #4 & 14)	1
18	75−2160	Bearing − Flange	2
19	75−1710	Support − Cutting Unit	1

Ref. No.	Part No.	Description	No. Used
20	67−7960	Decal − Warning (English)	1
*	84−4220	Decal − Warning (Japanese)	1
*	84−4210	Decal − Warning (Danish)	1
*	84−4200	Decal − Warning (Dutch)	1
*	84−4190	Decal − Warning (Italian)	1
*	84−4180	Decal − Warning (Spanish)	1
*	84−4170	Decal − Warning (German)	1
*	84−4160	Decal − Warning (French)	1
*	84−4150	Decal − Warning (Swedish)	1
21	323−7	Screw − Cap Hex. Hd.	4
25	83−4710	Plate − Spring, LH	1
*	83−4700	Plate − Spring, RH	1
26	3256−78	Washer − Plain	2
27	3296−42	Nut − Lock	2
28	83−4730	Spring − Torsion, LH	1
*	83−4720	Spring − Torsion, RH	1
29	322−9	Screw − Cap Hex. Hd.	2
30	3253−4	Washer − Spring Lock	2
31	82−6890	Washer − Special	4
32	251−259	Bearing − Ball	2
33	82−6840	Spacer	2
34	3256−24	Washer − Flat	2

*Not Illustrated

MAINTENANCE RECORD

Date								