FORM NO. 3319–491

TORO®

MODEL NO. 08881–70400 & UP
MODEL NO. 08881TE–70200 & UP

OPERATOR'S MANUAL

SAND PRO® 5000

To assure maximum safety, optimum performance, and to gain knowledge of the product, it is essential that you or any other operator of the machine read and understand the contents of this manual before the engine is ever started. Pay particular attention to the SAFETY INSTRUCTIONS highlighted by this symbol–



The safety alert symbol means CAUTION, WARNING or DANGER — personal safety instruction. Failure to comply with the instruction may result in personal injury.



©The TORO Company – 1997

FOREWORD

The SAND PRO 5000 was developed to provide an efficient, trouble free and economical method of sand trap maintenance. The latest concepts of engineering, design and safety have been incorporated into this machine, along with the highest quality parts and workmanship. Excellent service will be derived if proper operation and maintenance practices are followed.
You know, since you have purchased the industry leader in sand trap and other maintenance excellence, that future performance and dependability are of prime importance. TORO also is concerned about future use of the machine and of safety to the user. Therefore, this manual must be read by you and those involved with the SAND PRO 5000 to make sure that safety, proper set-up, operation and maintenance procedures are followed at all times. The major sections of the manual are:

1. Safety Instructions
2. Set-Up Instructions
3. Before Operating
4. Operating Instructions
5. Maintenance

Safety, mechanical and some general information in this manual are emphasized. **DANGER**, **WARNING** and **CAUTION** identify safety messages. Whenever the triangle safety symbol appears, it is followed by a safety message that must be read and understood. For more details concerning safety, read the safety instructions on pages 4 and 5. **IMPORTANT** identifies special mechanical information and **NOTE** identifies general information worthy of special attention.

⚠ WARNING: ⚠

The engine exhaust from this product contains chemicals known to the State of California to cause cancer, birth defects, or other reproductive harm.

OPTIONAL SPARK ARRESTER

In some areas there are local, state or federal regulations requiring a spark arrester muffler must be used on the engine of this machine. If a spark arrester is required, order the following part(s) from your local Toro Distributor.

(1) 83–2240 Spark Arrester

These parts are approved by the United States Department of Agriculture and the United States Forest Service.

When the machine is used or operated on any California forest, brush or grass covered land, a properly operating spark arrester must be attached to the muffler. The operator is violating state law, Section 442 Public Resources Code if a spark arrester is not used.

If help concerning set up, operation, maintenance or safety is ever needed, contact your local Authorized TORO Distributor. In addition to genuine TORO replacement parts, the distributor also has optional equipment for the complete line of TORO turf care equipment. Keep your Toro all TORO. Buy genuine TORO parts and accessories.

TABLE OF CONTENTS

SAFETY INSTRUCTIONS 4–5
SAFETY AND INSTRUCTION DECALS 5–6
SPECIFICATIONS 7
LOOSE PARTS CHART 7
SET–UP INSTRUCTIONS 8–9
Install Rear Wheels 8
Install Steering Wheel 8
Remove Battery 8
Activate and Charge Battery 8
Install Battery 9
BEFORE OPERATING 10–11
Check Crankcase Oil 10
Fill Fuel Tank 10
Check Hydraulic System 11
Check Tire Pressure 11
KNOW YOUR CONTROLS 12–13
OPERATING INSTRUCTIONS 14
Starting/Stopping Engine 14
Check Traction Interlock System 14
Pushing Sand Pro 14
Break–in Period 14
Operating Characteristics 14
Inspection and Clean–Up 15
SERVICE INTERVAL CHART 15
LUBRICATION 16
DAILY MAINTENANCE CHECKLIST 17
MAINTENANCE 18–23
Changing Engine Oil and Filter 18
Servicing Engine Air Cleaner 18
Servicing Remote Air Cleaner 18
Adjusting Throttle Control 19
Adjusting Choke Control 19
Replacing Spark Plugs 19
Cleaning Cylinder Head Fins 20
Changing Hydraulic System Oil and Filter 20
Checking Hydraulic Lines and Hoses 20
Charging Hydraulic System 21
Adjusting Steering Chain 21
Replacing Fuel Filter 21
Adjusting Traction Drive for Neutral 22
Adjusting Pedal for Forward 22
Adjusting Steering Wheel Tilt Lever 22
Adjusting parking Brake 23
Battery Storage 23
Battery Care 23
HYDRAULIC SCHEMATIC 24
ELECTRICAL SCHEMATIC 25
MAINTENANCE SCHEDULE 26
IDENTIFICATION AND ORDERING 27
THE TORO PROMISE . . . . . BACK COVER

SAFETY INSTRUCTIONS

The SAND PRO 5000 was designed and tested to offer safe service when operated and maintained properly. Although hazard control and accident prevention partially are dependent upon the design and configuration of the machine, these factors are also dependent upon the awareness, concern, and proper training of the personnel involved in the operation, transport, maintenance, and storage of the machine. Improper use or maintenance of the machine can result in injury or death. To reduce the potential for injury or death, comply with the following safety instructions.

BEFORE OPERATING

1. Operate the machine only after reading and understanding the contents of this manual. A replacement manual is available by sending complete model and serial number to: The Toro Company, 8111 Lyndale Avenue South, Minneapolis, Minnesota 55420.

2. Never allow children to operate the machine or adults to operate it without proper instructions.

3. Become familiar with the controls and know how to stop the engine quickly.

4. Keep all shields, safety devices and decals in place. If a shield, safety device or decal is malfunctioning, illegible, or damaged, repair or replace it before operating the machine.

5. Always wear substantial shoes. Do not operate machine while wearing sandals, tennis shoes or sneakers. Do not wear loose fitting clothing which could get caught in moving parts and cause personal injury.

6. Wearing safety glasses, safety shoes, long pants and a helmet is advisable and required by some local safety and insurance regulations.

7. Ensure traction neutral is adjusted correctly so engine cannot be started unless traction pedal is released and in neutral position.

8. Keep everyone, especially children and pets away from the areas of operation.

9. Since gasoline is highly flammable, handle it carefully.

A. Use an approved gasoline container.

B. Do not remove cap from fuel tank when engine is hot or running.

C. Do not smoke while handling gasoline.

D. Fill fuel tank outdoors and to about one inch below top of tank, (bottom of filler neck). Do not overfill.

E. Wipe up any spilled gasoline.

10. Check the safety interlock system daily for proper operation; refer to page 14. If the switch should malfunction, replace the switch before operating machine. (After every two years, replace the interlock switch in the safety system, whether it is working properly or not.)

WHILE OPERATING

11. Exhaust fumes are hazardous and could be deadly, so do not run the engine in a confined area without adequate ventilation.

12. Sit on seat when operating the machine. Never carry passengers.

13. When starting the engine:

A. Make sure traction pedal is released.

B. After the engine is started, keep foot off traction pedal. Machine must not move. If movement is evident, the neutral return mechanism is adjusted incorrectly; therefore, shut engine off and
readjust so machine does not move when in neutral position. If engine does not start, check interlock switch connections.

14. Using the machine demands attention. To prevent tipping or loss of control:

A. Use care when entering and leaving sand traps. Use extreme caution around ditches, creeks or other hazards.

B. Watch for holes or other hidden hazards.

C. Use caution when operating machine on a steep slope. Reduce speed when making sharp turns or when turning on hillsides.

D. Avoid sudden stops and starts. Do not go from reverse to full forward without first coming to a complete stop.

E. Before backing up, look to the rear and assure no one is behind the machine.

F. Watch out for traffic when near or crossing roads. Always yield the right of way.

15. If optional Hitch Kit, model 08833, is installed on machine, vertical load on hitch should not exceed 200 lbs.

16. Do not touch engine, muffler or muffler shield while engine is running or soon after it has stopped because these areas are hot enough to cause burns.

17. If the machine ever vibrates abnormally, stop immediately, turn engine off, wait for all motion to stop and inspect for damage. Repair all damage before commencing operation.

SAFETY INSTRUCTIONS

18. Before getting off the seat:

A. Stop movement of the machine. Take precautions to prevent accidental starts, rolling away, etc.

B. Engage parking brake

C. Shut engine off and wait for all movement to stop.

D. Lower attachments to the ground.

19. Whenever machine is left unattended, be sure engine is stopped, parking brake engaged, implement is lowered and key is removed from ignition.

MAINTENANCE

20. Before servicing or making adjustments to the machine, stop the engine and pull the spark plug wire off spark plug to prevent accidental starting of the engine.

21. Make sure all hydraulic line connectors are tight, and all hydraulic hoses and lines are in good condition before applying pressure to the system.

22. Keep body and hands away from pin hole leaks or nozzles that eject hydraulic fluid under high pressure. Use paper or cardboard, not hands, to search for leaks. Hydraulic fluid escaping under pressure can have sufficient force to penetrate skin and do serious damage. If fluid is injected into the skin it must be surgically removed within a few hours by a doctor familiar with this form of injury or gangrene may result.

23. Before disconnecting or performing any work on the hydraulic system, all pressure in system must be relieved by stopping engine and lowering attachments to the ground.

24. To make sure entire machine is in good condition, keep all nuts, bolts and screws properly tightened.

25. If major repairs are ever needed or assistance is required, contact an Authorized TORO Distributor.

26. To reduce potential fire hazard, keep the engine area free of excessive grease, grass, leaves and accumulation of dirt.

27. If the engine must be running to perform a maintenance adjustment, keep hands, feet, clothing, and any parts of the body away from the engine and any moving parts. Keep everyone away.

28. Do not overspeed engine by changing governor settings. Maximum engine speed is 3200 rpm. To assure safety and accuracy, have an Authorized Toro Distributor check maximum engine speed with a tachometer.

29. Engine must be shut off before checking oil or adding oil to the crankcase.

30. To be sure of optimum performance and safety, always purchase genuine TORO replacement parts and accessories. Replacement parts and accessories made by other manufacturers could be dangerous. Such use could void the product warranty of The Toro Company.

SAFETY AND INSTRUCTION DECALS

The following safety and instruction decals are installed on the machine. If any become damaged or illegible, replace them. Decal part numbers are listed below and in the parts catalog. Order replacements from your Authorized Toro Distributor.



ON MUFFLER SHIELD
(Part No. 80--8290)

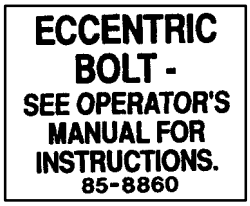

ON NEUTRAL ADJUST MECHANISM
(Part No. 85--8860)



ON SEAT SUPPORT
(Part No. 92--2335)



ON BOTH SIDES OF FAN SHROUD (2)
(Part No. 77--3100)

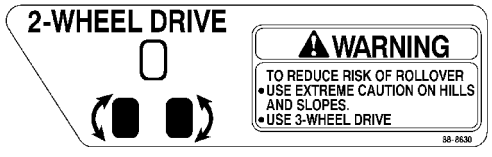

ON SEAT SUPPORT
(Part No. 88--8630)

SAFETY AND INSTRUCTION DECALS

The following safety and instruction decals are installed on the machine. If any become damaged or illegible, replace them. Decal part numbers are listed below and in the parts catalog. Order replacements from your Authorized Toro Distributor.

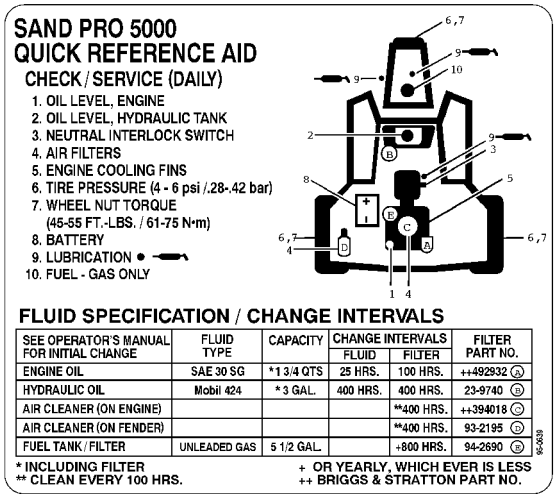

UNDER SEAT PLATE
(Part No. 95--0639)

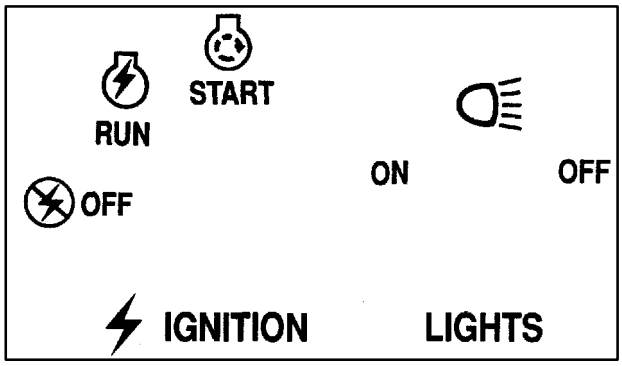

ON CONSOLE
(Part No. 85--8830)



ON FRAME & BOTH SIDES
OF CENTER PANEL (3)
(Part No. 85--8880)



ON LEFT FENDER
(Part No. 85--8840)

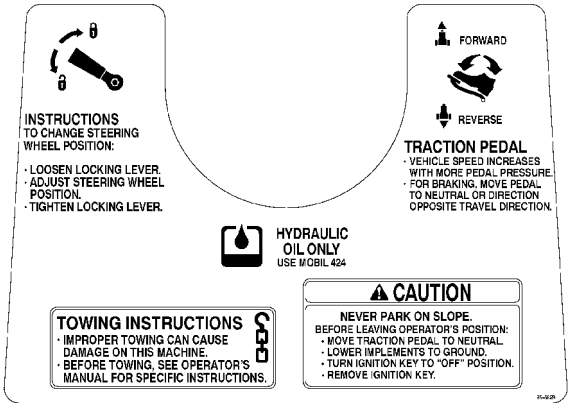

ON CENTER PANEL
(Part No. 95--5829)



ON LEFT FENDER
(Part No. 92--7442)

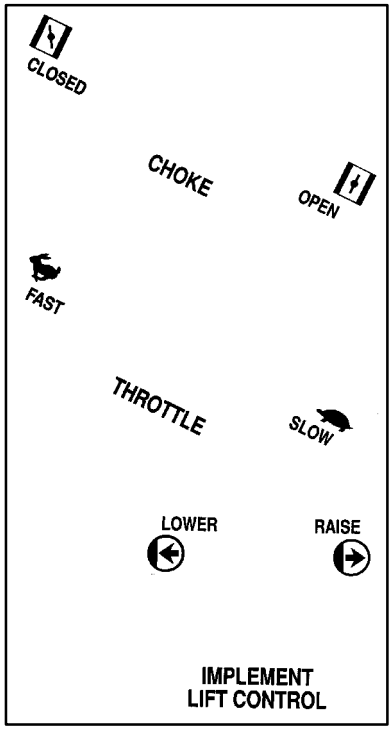

ON RIGHT FENDER
(Part No. 85--8820)

SPECIFICATIONS

Configuration: Tricycle vehicle with welded steel frame construction. Rear engine placement. All wheels powered.

Engine: Briggs & Stratton, V–twin cylinder, 4 cycle, OHV, air cooled, gas engine with cast iron sleeves. 16 hp @ 3600 rpm, 29.3 cu. in. (480 cc) displacement, 1.75 qt. oil capacity. Electronic ignition. Full pressure lubrication, oil filter. Engine and remote mounted air cleaners.

Gauges: Ammeter and hour meter.

Controls: Hand operated throttle, choke, lift lever and parking brake. Foot pedal controls traction forward / reverse speed.

Steering: Front wheel steering with adjustable tilt steering wheel.

Gas Tank: 5.5 gallon capacity.

Battery: 12 volt, lead acid, 280 CCA.

Drive: Hydraulic. Coupling driven variable displacement piston pump with integral auxiliary charge pump to hydraulic motors which directly drive wheels.

Hydraulic Oil Filter: 25 micron, spin on type.

Hydraulic Oil Reservoir: 3 gallon capacity.

Valve: Single section for raising and lowering of implement.

Cylinder: Double acting.

Tires: 22 x 11.00 – 8 two ply pneumatic tubeless. De–mountable and interchangeable. Recommended tire pressure is 4 PSI.

Speeds (at 3200 RPM): Variable between 0 and 8.5 MPH forward and 0 and 4 MPH reverse. 2 speed valve for transport speeds up to 11 MPH.

Seat Adjustment: 4 inches – fore and aft. Additional 1.75 inches forward adjustment available by using front mounting holes. Additional adjustment for small operator attained by removing seat slides and base and mounting seat directly to support.

Dimensions:

Width w/o implements:	58”
Width w/rake Model 08812:	75”
Height:	46.25”
Length w/o implements:	64.5”
Wheelbase	42.75”
Net Weight: (Wet)	807 lb.

Optional Equipment:

Drag Mat	Model No. 08845
Edger	Model No. 08822
Rake	Model No. 08811
Rake Mounting Kit	Model No. 08814
Tooth Rake	Model No. 08812
Weeder/Cultivator	Model No. 08815
Finish Grader	Model No. 08867
Spiker	Model No. 08856
Front Blade	Model No. 08821
Renovation Cultivator	Model No. 08818
Prong Rake Attachment	Part No. 42–3960
Hitch	Part No. 20–3900

LOOSE PARTS CHART

Note: Use this chart as a checklist to ensure all parts necessary for assembly have been shipped. If any of these parts are missing, total set–up cannot be completed.

PART DESCRIPTION	QTY.	WHERE USED
Tire & rim assembly Lug nuts	2 8	Install on rear motors
Steering wheel Roll pin 1/4 x 2” lg.	1 1	Mount steering wheel
Capscrew 1/4 – 20 x 5/8” lg. Nuts 1/4 – 20	2 2	Secure battery cables to battery
Capscrew 1/2 – 13 x 1–1/4” lg. Washer 1/2	4 4	Mount rear attachments
Cylinder pin Hairpin cotter Capscrew 3/8 – 16 x 2–1/4” lg. Locknut 3/8 – 16 Spacer	1 2 1 1 1	Attach cylinder to implement
Keys	2	
Operator’s manual Parts catalog Registration card	1 1 1	Read before operating machine. Fill out and return to Toro.

Specifications and design subject to change without notice.

SET UP INSTRUCTIONS

INSTALL REAR WHEELS (Fig. 1)

Note: Install the rear wheels to the machine while it is still on the pallet shipping blocks.

1. Mount a wheel to each wheel motor and secure with lug nuts. Tighten lug nuts evenly and gradually in a crisscross manner to 45–55 ft–lb.

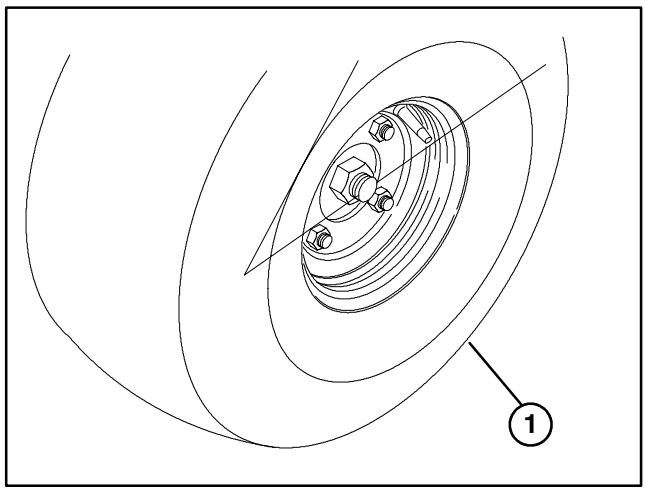

Figure 1
1. Rear wheel

2. Remove the shipping blocks and lower the machine onto the rear wheels.

Note: We suggest saving the shipping blocks, as they are the correct height for blocking the unit when changing tires, servicing wheel motors or performing other service work.

INSTALL STEERING WHEEL (Fig. 2)

1. Move front wheel so it points straight ahead.

2. Slide steering wheel onto steering shaft aligning mounting holes.

3. Secure steering wheel in place with roll pin.

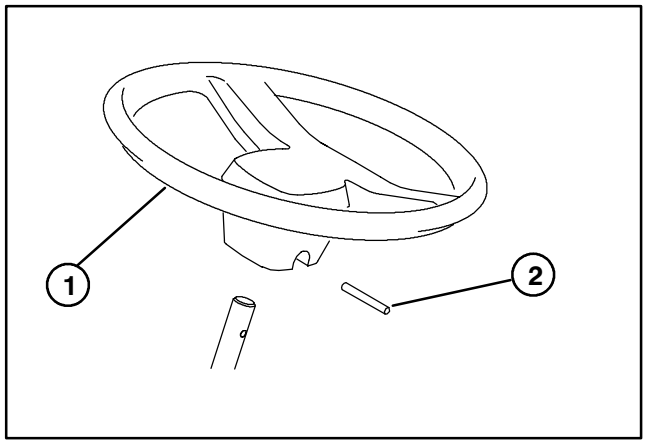

Figure 2
1. Steering wheel
2. Roll pin

REMOVE BATTERY (Fig. 5)

1. Remove (3) screws securing side panel from left side of machine and remove panel (Fig. 3).

2. Through slot in left panel, remove (2) wing nuts and washers securing top battery hold down to side battery hold downs. Remove top battery hold and slide battery forward to remove.

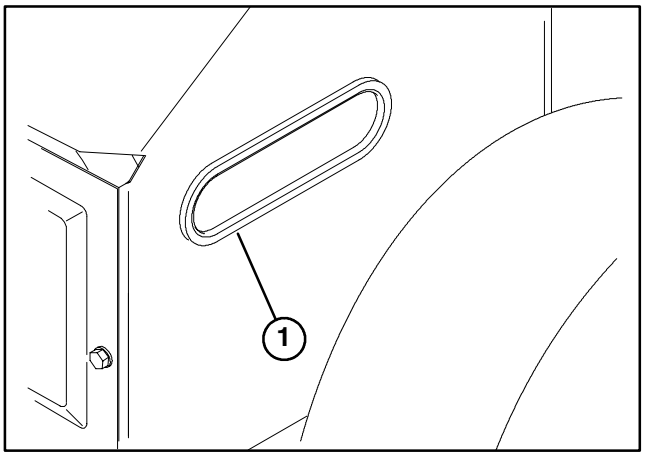

Figure 3
1. Slot in left panel

ACTIVATE AND CHARGE BATTERY (Fig. 6)

1. If Battery is not filled with electrolyte or activated, bulk electrolyte with 1.260 specific gravity must be purchased from a local battery supply outlet and added to battery.

CAUTION

Wear safety goggles and rubber gloves when working with electrolyte. Charge the battery in a well ventilated place so gasses produced while charging can dissipate. Since the gases are explosive, keep open flames and electrical spark away from the battery; do not smoke. Nausea may result if the gases are inhaled. Unplug charger from electrical outlet before connecting to or disconnecting charger leads from battery posts.

2. Remove filler caps from battery and slowly fill each cell until electrolyte is up to fill line.

3. Replace filler caps and connect a 3 to 4 amp battery charger to the battery posts. Charge the battery at a rate of 3 to 4 amperes for 4 to 8 hours.

4. When battery is charged, disconnect charger from electrical outlet and battery posts. Allow battery to sit for 5 to 10 minutes before proceeding to next step.

5. Remove filler caps and slowly add electrolyte to each cell until level is up to fill line. Install filler caps.

SET UP INSTRUCTIONS

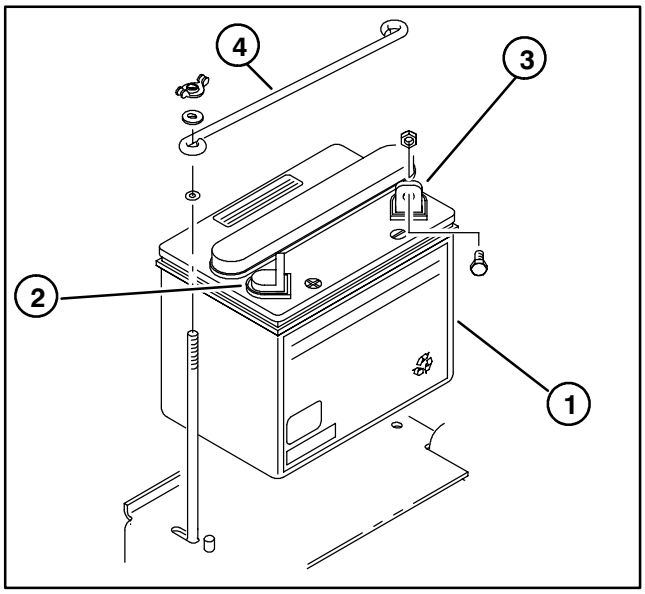

Figure 4

1. Battery
2. Positive (+) battery terminal
3. Negative (–) battery terminal
4. Top battery hold down

IMPORTANT: **Do not overfill battery. Electrolyte will overflow onto other parts of the machine and severe corrosion and deterioration will result.**

INSTALL BATTERY (Fig. 4)

1. Slide the battery in place, with the terminals to the outside.

2. Secure the positive cable (red) to the positive (+) terminal with a 1/4–20 x 5/8" lg. capscrew and nut.

WARNING

Connecting cables to the wrong post could result in personal injury and/or damage to the electrical system. Make sure battery or cables do not interfere or rub on any moving or hot parts.

3. Secure the two small black wires and the negative cable (black) to the negative (–) terminal of the battery with a 1/4–20 x 5/8" lg. capscrew and nut.

4. Coat the terminals and mounting fasteners with petroleum jelly to prevent corrosion. Slide the rubber boot over the positive (+) terminal to prevent possible short–out from occurring.

5. Install the top battery hold down to side battery hold downs and secure with washers and wing nuts.

6. Reinstall side panel to machine with screws previously removed.

BEFORE OPERATING

CHECK CRANKCASE OIL (Fig. 7)

The engine is shipped with 1 – 3/4 quarts (w/ filter) of oil in the crankcase; however, level of oil must be checked before and after the engine is first started.

1. Position machine on a level surface.

2. Pivot seat upward.

3. Unscrew dipstick and wipe it with a clean rag. Screw dipstick into tube and make sure it is seated fully. Unscrew dipstick out of tube and check level of oil. If oil level is low, remove filler cap from valve cover (next to dipstick) and add enough oil to raise level to FULL mark on dipstick.

4. The engine uses any high-quality detergent oil having the American Petroleum Institute -API- "service classification" SE, SF or SG. Recommended viscosity (weight) is SAE 30.

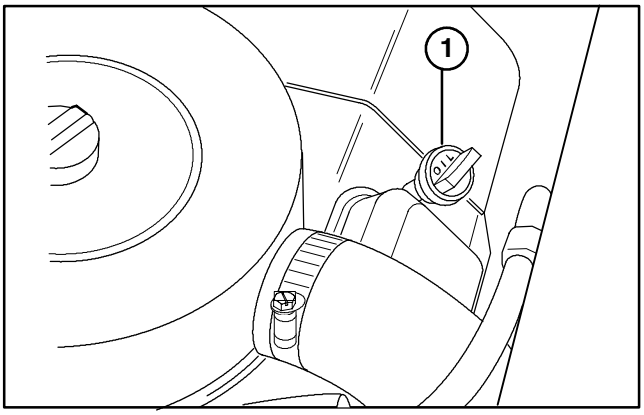

Figure 5
1. Dipstick

5. Install the dipstick firmly in place.

IMPORTANT: Dipstick must be fully seated in tube to provide proper sealing of engine crankcase. Failure to seal crankcase may result in engine damage.

IMPORTANT: Check level of oil every 8 operating hours or daily. Initially, change oil after the first 8 hours of operation; thereafter, under normal conditions, change oil every 50 hours and filter every 100 hours. However, change oil more frequently when engine is operated in extremely dusty or dirty conditions.

FILL FUEL TANK (Fig. 8)

Fuel tank capacity is approximately 5.5 gallons.

DANGER

Because gasoline is flammable, caution must be used when storing or handling it. Do not fill fuel tank while engine is running, hot or when machine is in an enclosed area. Vapors may build up and be ignited by a spark or flame source many feet away. DO NOT SMOKE while filling the fuel tank to prevent the possibility of an explosion. Always fill fuel tank outside and wipe up any spilled gasoline before starting engine. Use a funnel or spout to prevent spilling gasoline, and fill tank no higher than one inch below top of tank, (bottom of filler neck). DO NOT OVER FILL. Store gasoline in a clean safety approved container and keep the cap on the container. Keep gasoline in a cool, well – ventilated place; never in an enclosed area such as a hot storage shed. To assure volatility, do not buy more than a 30 day supply of gasoline. Gasoline is a fuel for internal combustion engines; therefore do not use it for any other purpose. Since many children like the smell of gas, keep it out of their reach because the fumes are explosive and dangerous to inhale.

THE TORO COMPANY STRONGLY RECOMMENDS THE USE OF FRESH, CLEAN, **UNLEADED** REGULAR GRADE GASOLINE IN TORO GASOLINE POWERED PRODUCTS. UNLEADED GASOLINE BURNS CLEANER, EXTENDS ENGINE LIFE, AND PROMOTES GOOD STARTING BY REDUCING THE BUILD – UP OF COMBUSTION CHAMBER DEPOSITS. LEADED GASOLINE CAN BE USED IF UNLEADED IS NOT AVAILABLE.

NOTE: NEVER USE METHANOL, GASOLINE CONTAINING METHANOL, GASOLINE CONTAINING MORE THAN 10% ETHANOL, GASOLINE ADDITIVES, PREMIUM GASOLINE OR WHITE GAS BECAUSE ENGINE FUEL SYSTEM DAMAGE COULD RESULT.

1. Clean area around fuel tank cap.

2. Remove fuel tank cap.

3. Fill tank to about one inch below top of tank, (bottom of filler neck). **DO NOT OVERFILL.** Then install cap.

4. Wipe up any fuel that may have spilled to prevent a fire hazard.

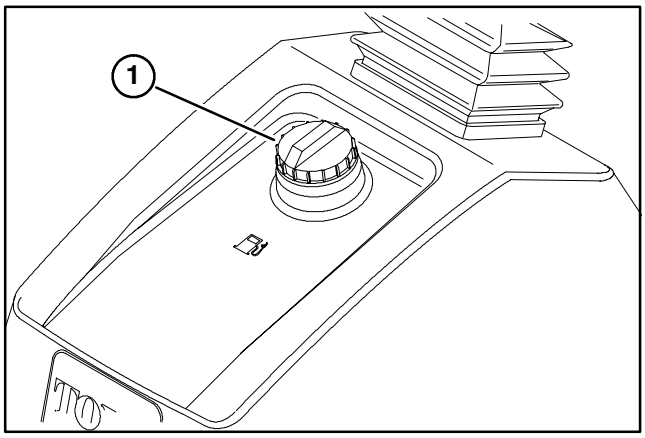

Figure 6
1. Fuel tank cap

CHECK HYDRAULIC SYSTEM (Fig. 9)

The hydraulic system is designed to operate on anti−wear hydraulic fluid. The machines reservoir is filled at the factory with approximately 3 gallons of Mobil 424 hydraulic fluid. **Check level of hydraulic fluid before engine is first started and daily thereafter.**

Group 1 Hydraulic Fluid (Recommended for ambient temperatures consistently below 100° F.):

ISO type 46/68 anti−wear hydraulic fluid

Mobil	Mobil Fluid 424
Amoc	Amoco 1000
International Harvester	Hy−Tran
Texaco	TDH
Shell	Donax TD
Union OIl	Hydraulic/Tractor Fluid
Chevron	Tractor Hydraulic Fluid
BP Oil	BP HYD TF
Boron OIl	Eldoran UTH
Exxon	Torque Fluid
Conoco	Power−Tran 3
Kendall	Hyken 052
Phillips	HG Fluid

Note: The fluids within this group are interchangeable.

IMPORTANT: Use only hydraulic oils specified. Other fluids could cause system damage.

1. Remove cap from hydraulic oil reservoir.

2. Check level of oil in reservoir. Oil level should be up to top of cone point on tank screen.

3. If oil level is low, slowly fill with Mobil DTE 26 or equivalent hydraulic oil until level is up to top of cone point on tank screen. **DO NOT OVERFILL.**

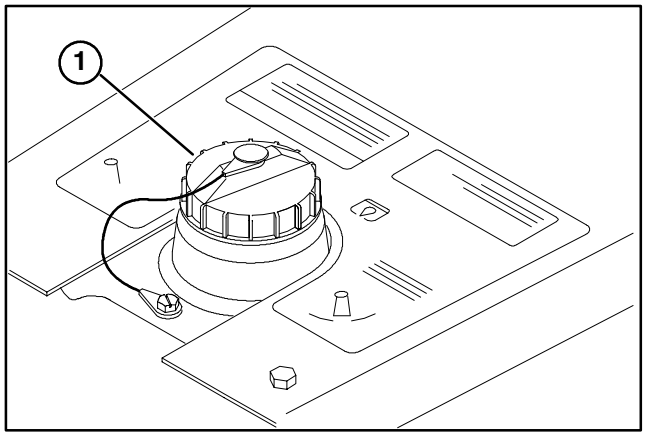

Figure 7
1. Oil reservoir cap

4. Install reservoir cap.

IMPORTANT: To prevent system contamination, clean top of hydraulic oil containers before opening. Assure pour spout and funnel are clean.

CHECK TIRE PRESSURE (Fig. 10)

The tires are over−inflated at the factory for shipping purposes. Reduce the pressure to the proper levels before starting the machine.

Correct air pressure in front and rear tires is 4−6 psi.

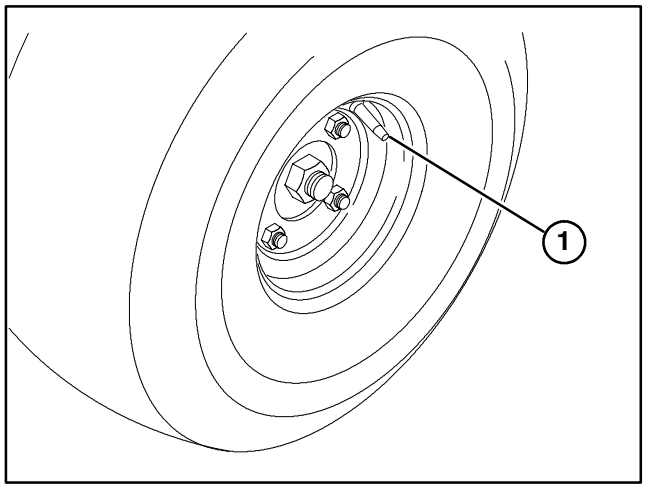

Figure 8
1. Air valve

KNOW YOUR CONTROLS

Traction and Stopping Pedal (Fig. 11–12) – Traction pedal has three functions: one, to make the machine move forward, two, to move it backward and three, to stop machine. Using the heel and toe of the right foot, depress top of pedal to move forward and bottom of pedal to move backward or to assist in stopping when moving forward. Allowing pedal to move to neutral position will stop machine. **For operator comfort, do not rest heel of foot on reverse when operating forward (Fig. 12).**

Ground speed is proportionate to how far traction pedal is depressed. For maximum ground speed, pedal must be fully depressed while throttle is in FAST position. To get maximum power or when ascending a hill, have throttle in FAST position while depressing pedal slightly to keep engine rpm high. When engine rpm begins to decrease, release pedal slightly to allow rpm to increase.

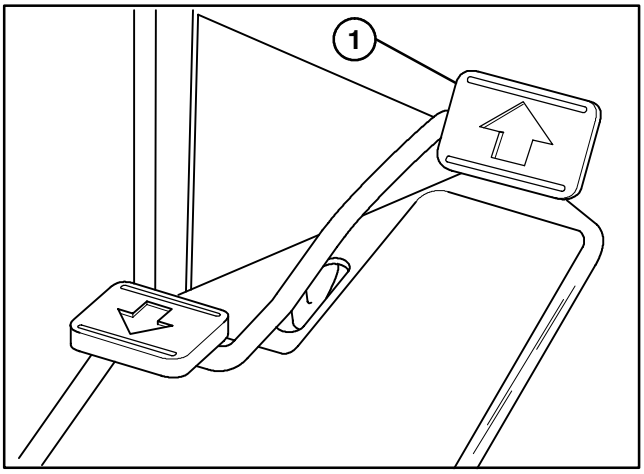

Figure 9

1. Traction & Stopping Pedal

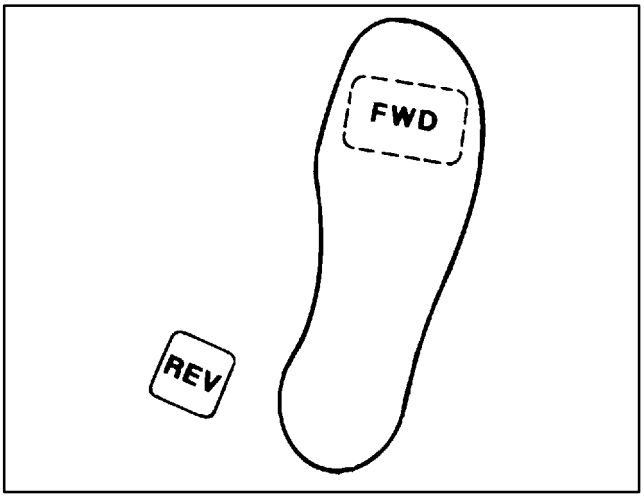

Figure 10

IMPORTANT: For maximum pulling power, throttle should be in "Fast" position, and traction pedal just barely depressed.

CAUTION

Use the maximum ground speed ONLY when driving from one area to another. Maximum speed is not recommended when using an attached or towed implement.

IMPORTANT: The SAND PRO must not be operated in reverse with the implement in the down (operating) position, or the implement could be severely damaged.

Ignition Switch (Fig.13) – The ignition switch, used to start and stop the engine, has three positions: OFF, RUN and START. Rotate key clockwise — START position — to engage starter motor. Release key when engine starts. The key will move automatically to the RUN position. To shut engine off, rotate key counterclockwise to OFF position.

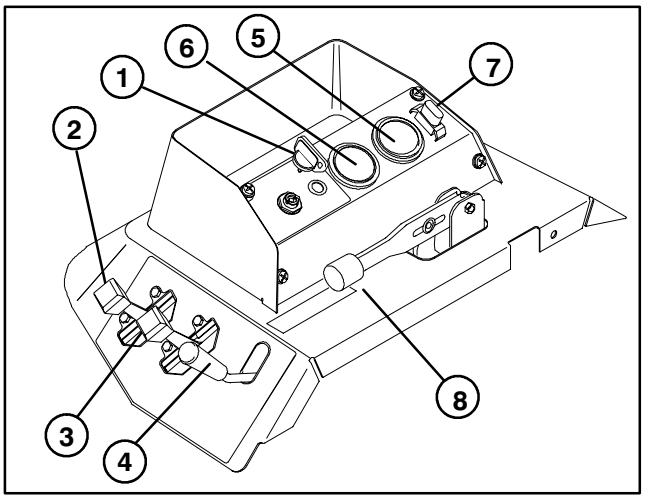

Figure 11

1. Ignition switch
2. Choke control
3. Throttle control
4. Lift lever
5. Hour meter
6. Ammeter
7. Fuse (20 Amp)
8. Parking brake

Choke Control (Fig. 13) – To start a cold engine, close carburetor choke by moving choke control forward to the "CLOSED" position. After engine starts, regulate choke to keep engine running smoothly. As soon as possible, open the choke by pulling upward to the "OPEN" position. A warm engine requires little or no choking.

Throttle Control (Fig. 13) – Lever connects to and operates throttle linkage to carburetor. Control has two positions: SLOW and FAST. Engine speed can be varied between the two settings.

Note: The engine cannot be stopped by the throttle control.

KNOW YOUR CONTROLS

Hour Meter (Fig. 13) – Indicates the total hours of machine operation. The Hour Meter starts to function whenever the key switch is rotated to “ON” position.

Ammeter (Fig. 13) – The ammeter indicates the rate of battery charge or discharge.

Note: During normal operation, there will usually be slight ammeter needle movement to positive side.

Lift Lever (Fig.13) – To raise the implement, pull the lever up; to lower implement, push the lever down. When the desired position is attained, release the lever and it will return to neutral.

NOTE: The SAND PRO has a double–acting lift cylinder. Down pressure can be applied to the implement for certain operating conditions.

Parking Brake (Fig.13) – To engage parking brake, pull back on lever. To disengage, push lever forward.

Steering Wheel Tilt Lever (FIg. 12) – Lever on left side of steering column allows steering wheel to be adjusted for operator comfort.

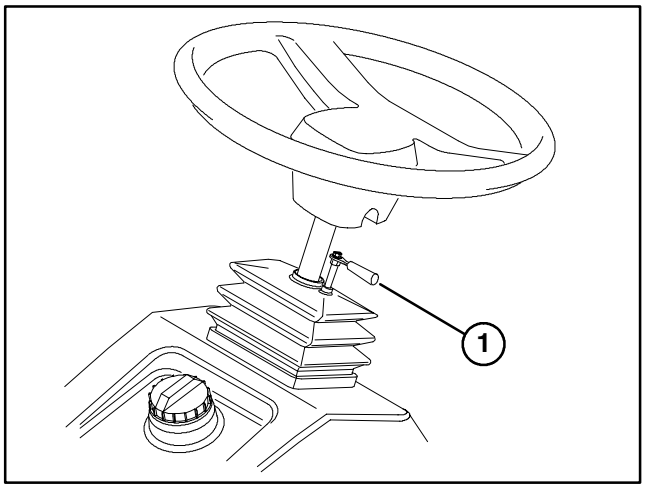

Figure 12

1. Steering wheel tilt lever

Seat Adjusting Lever (FIg.13) – Lever on right side of seat allows seat to be adjusted fore and aft for operator comfort.

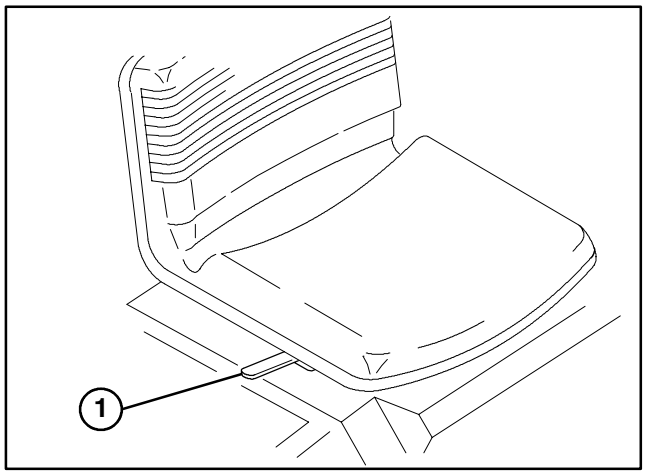

Figure 13

1. Seat adjusting lever

2 Speed Valve Lever (Fig. 14) – Rotate lever counter clockwise to obtain a faster transport speed and clockwise for 3 wheel drive.

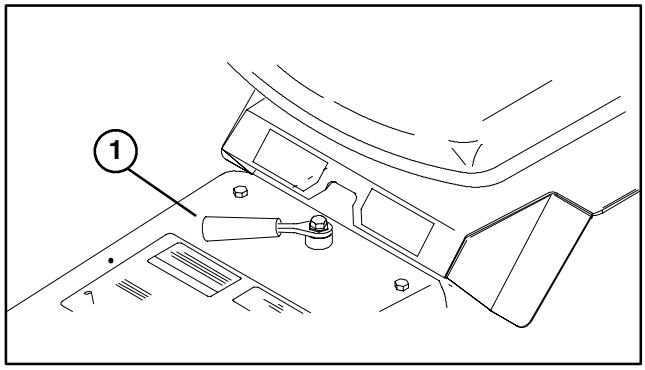

Figure 14

1. 2 speed valve lever

Fuel Shut–Off Valve (Fig. 15) – Close fuel shut–off valve when storing machine.

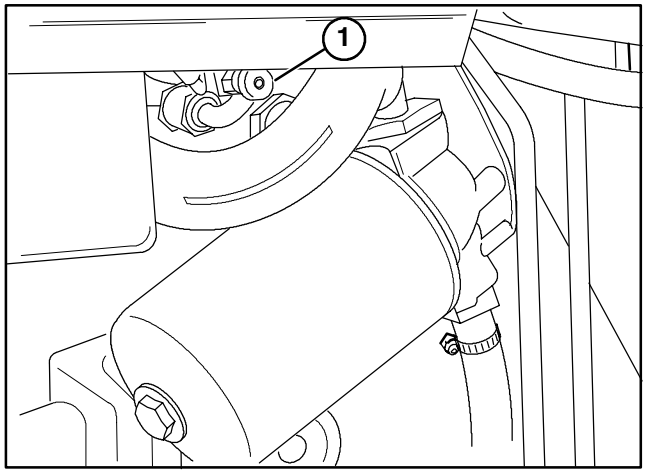

Figure 15

1. Fuel shut–off valve

OPERATING INSTRUCTIONS

STARTING/STOPPING ENGINE

1. Remove foot from traction pedal, make sure pedal is in neutral position and engage parking brake.

2. Push choke forward to ON position – when starting a cold engine – and throttle lever to SLOW position.

3. Insert key into ignition switch and rotate it clockwise to start the engine. Release key when engine starts. Regulate the choke to keep engine running smoothly.

IMPORTANT: To prevent overheating of the starter motor, do not engage starter longer than 10 seconds. After 10 seconds of continuous cranking, wait 60 seconds before engaging starter motor again.

4. When engine is started for the first time, or after overhaul of the engine, operate the machine in forward and reverse for one to two minutes. Also operate the lift lever to be sure of proper operation of all parts. Shut engine off and check for oil leaks, loose parts and any other noticeable malfunctions.

CAUTION

Shut engine off and wait for all moving parts to stop before checking for oil leaks, loose parts and other malfunctions.

5. To stop engine, move throttle control to SLOW position and rotate ignition key to OFF. Remove key from switch to prevent accidental starting.

6. Close fuel shut off valve before storing machine.

CHECK TRACTION INTERLOCK SYSTEM

The purpose of the interlock system is to prevent the engine from cranking or starting unless the traction pedal is in "NEUTRAL".

CAUTION

The interlock switch is for the operator's protection, so do not disconnect it. Check operation of the switch daily to assure interlock system is operating. If the switch is defective, replace it before operating. Regardless if switch is operating properly or not, replace it every two years to assure maximum safety. Do not rely entirely on safety switches -- use common sense!

1. Check interlock operation in a wide open area free of debris and bystanders. Stop engine.

2. Sit on the seat. Depress traction pedal in forward and reverse directions, while trying to start the engine. If engine cranks there may be a malfunction in the interlock system. Repair immediately. If engine does not crank, system is operating correctly.

TOWING SAND PRO

In case of emergency, the SAND PRO can be towed for a short distance. However, Toro does not recommend this as a standard procedure.

IMPORTANT: Do not tow the machine faster than 2–3 mph because drive system may be damaged. If machine must be moved a considerable distance, transport it on a truck or trailer. Tires may lock up if machine is towed too fast. If this occurs, stop towing machine and wait for traction circuit pressure to stabilize before resuming towing at a slower speed.

BREAK–IN PERIOD

1. Only 8 hours operating time is required for SAND PRO break–in period.

2. Since the first hours of operation are critical to future dependability of the machine, monitor its functions and performance closely so that minor difficulties, which could lead to major problems, are noted and can be corrected. Inspect SAND PRO frequently during break–in for signs of oil leakage, loose fasteners, or any other malfunction.

OPERATING CHARACTERISTICS

CAUTION

Using the machine demands attention. To prevent tipping or loss of control, use care when entering and leaving sand traps. Use extreme caution around ditches, creeks or other hazards. Use caution when operating machine on a steep slope. Reduce speed when making sharp turns or when turning on hillsides. Avoid sudden stops and starts. Do not go from reverse to full forward without first coming to a complete stop.

Practice driving the SAND PRO because its operating characteristics are different than some utility vehicles. Two points to consider when operating the vehicle are transmission and engine speed.

OPERATING INSTRUCTIONS

To maintain somewhat constant engine speed, depress traction pedal slowly. This allows the engine to keep up with ground speed of the vehicle. By contrast, pushing down quickly on the traction pedal will reduce engine rpm and, as a result, there will not be enough torque – power – to move the vehicle. Therefore, to transfer maximum power to the wheels, move throttle to FAST and slightly depress traction pedal. By comparison, maximum ground speed with no load results when throttle is in FAST position and traction pedal is slowly but fully depressed. In summary, always keep engine speed high enough to deliver maximum torque – power – to the wheels.

INSPECTION AND CLEAN – UP

At the completion of operation, after engine has cooled, thoroughly wash the machine with a garden hose – without a nozzle – so excessive water pressure will not cause contamination and damage to seals and bearings.

Make sure cooling fins and area around engine cooling air intake are kept free of debris. After cleaning, it is recommended the machine be inspected for possible hydraulic fluid leaks, damage or wear to hydraulic and mechanical components.

SERVICE INTERVAL CHART

SAND PRO 5000 QUICK REFERENCE AID

CHECK / SERVICE (DAILY)

1. OIL LEVEL, ENGINE
2. OIL LEVEL, HYDRAULIC TANK
3. NEUTRAL INTERLOCK SWITCH
4. AIR FILTERS
5. ENGINE COOLING FINS
6. TIRE PRESSURE (4 - 6 psi /.28-.42 bar)
7. WHEEL NUT TORQUE (45-55 FT.-LBS. / 61-75 N•m)
8. BATTERY
9. LUBRICATION ●
10. FUEL - GAS ONLY

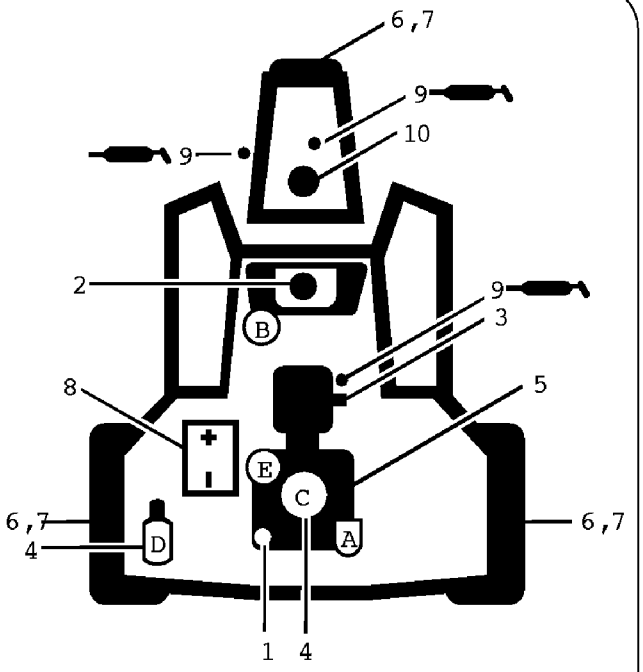

FLUID SPECIFICATION / CHANGE INTERVALS

SEE OPERATOR'S MANUAL FOR INITIAL CHANGE	FLUID TYPE	CAPACITY	CHANGE INTERVALS		FILTER PART NO.
			FLUID	FILTER	
ENGINE OIL	SAE 30 SG	*1 3/4 QTS	25 HRS.	100 HRS.	++492932 (A)
HYDRAULIC OIL	Mobil 424	* 3 GAL.	400 HRS.	400 HRS.	23-9740 (B)
AIR CLEANER (ON ENGINE)				**400 HRS.	++394018 (C)
AIR CLEANER (ON FENDER)				**400 HRS.	93-2195 (D)
FUEL TANK / FILTER	UNLEADED GAS	5 1/2 GAL.		+800 HRS.	94-2690 (E)

95-0639

* INCLUDING FILTER
** CLEAN EVERY 100 HRS.

\+ OR YEARLY, WHICH EVER IS LESS
++ BRIGGS & STRATTON PART NO.

LUBRICATION

CAUTION

Before servicing or making adjustments to the machine, stop engine, pull wires off spark plugs and remove key from the switch.

The Sand Pro has (3) grease fittings that must be lubricated regularly with No. 2 General Purpose Lithium Base Grease. Lubricate front wheel bearing and Traction Control Linkage after every 50 hours of operation. Lubricate steering shaft every 100 hours.

The bearings and bushings that must be lubricated are: front wheel bearing (Fig. 16), Traction Control Linkage (Fig. 17) and steering shaft (Fig. 18).

1. Wipe grease fitting clean so foreign matter cannot be forced into the bearing or bushing.

2. Pump grease into the bearing or bushing.

3. Wipe up excess grease.

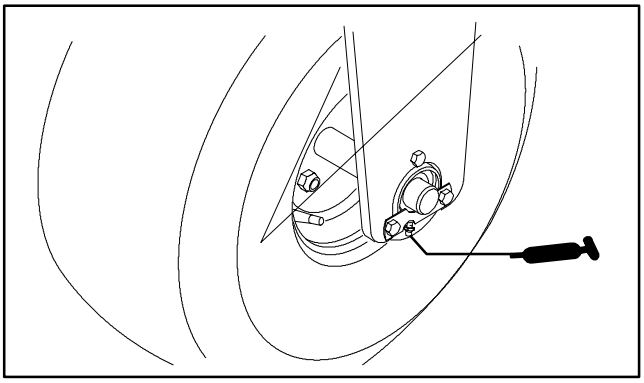

Figure 16

Note: To gain access to grease fitting on traction control linkage (Fig. 17), remove (3) screws securing side panel to right side of machine and remove panel.

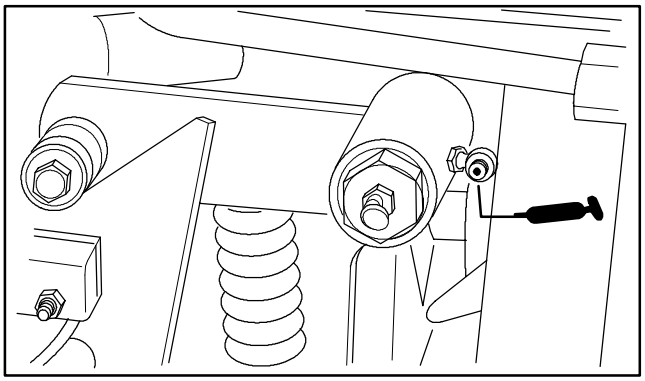

Figure 17

Note: To gain access to grease fitting on steering shaft (Fig. 18), remove (4) screws and spacers securing fuel tank to top of machine and raise front of tank.

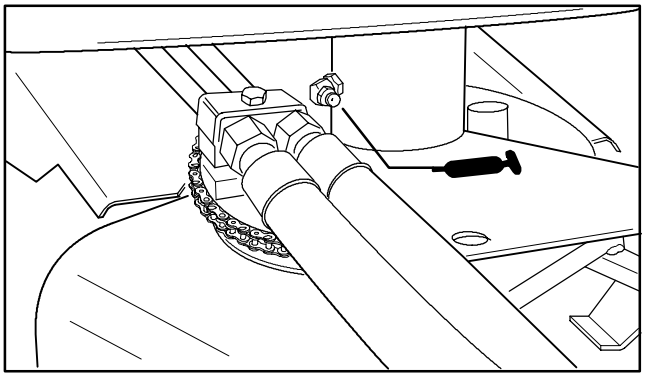

Figure 18

NOTE: We do not recommend lubricating the steering chain unless it becomes stiff because of rust. If the chain rusts, it may be lubricated lightly with a DRY–TYPE LUBRICANT.

DAILY MAINTENANCE CHECKLIST

Daily Maintenance: (duplicate this page for routine use)

Maintenance Check Item ➧	**Daily Maintenance Check For Week Of _____**						
	MON	TUES	WED	THURS	FRI	SAT	SUN
✓ Safety Interlock Operation							
✓ Steering Operation							
✓ Engine Oil Level							
✓ Remote Air Filter Dust Cup							
Clean Engine Cooling Fins							
✓ Unusual Engine Noises							
✓ Unusual Operating Noises							
✓ Hydraulic System Oil Level							
✓ Hydraulic Hoses for Damage							
✓ Fluid Leaks							
✓ Fuel Level							
✓ Tire Pressure							
✓ Instrument Operation							
Touch-up Damaged Paint							

Notation for areas of concern: Inspection performed by_____

Item	Date	Information
1		
2		
3		
4		
5		
6		
7		
8		

Check proper section of Operator's Manual for fluid specifications

MAINTENANCE

CHANGING ENGINE OIL AND FILTER (Fig. 19)

Change oil initially after the first 8 hours of operation, thereafter change oil every 50 hours and filter every 100 hours.

1. Park the machine on a level surface and turn the engine off.

2. Remove drain plug and let oil flow into drain pan. When oil stops, install drain plug.

3. Remove oil filter. Apply a light coat of clean oil to the new filter gasket.

4. Screw filter on by hand until gasket contacts filter adapter, then tighten 1/2 to 3/4 turn further. DO NOT OVER–TIGHTEN.

5. Add oil to crankcase, refer to CHECK CRANKCASE OIL, Page 10.

6. Dispose of oil properly.

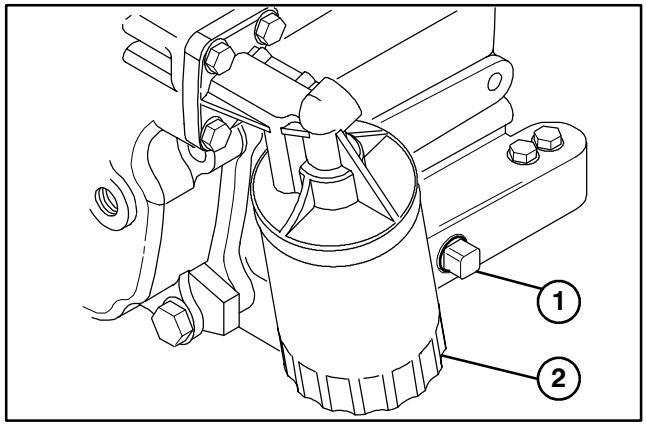

Figure 19
1. Drain plug
2. Oil filter

SERVICING ENGINE AIR CLEANER (Fig. 20)

Inspect paper element every 100 hours of operation and replace every 400 hours or when dirty or damaged. Do not wash paper element or do not clean with compressed air as damage will occur.

1. Park the machine on a level surface and turn the engine off.

2. Pivot seat upward.

3. Remove knobs and air cleaner cover.

4. Remove filter and cover plate. Inspect filter for cleanliness, ruptures, holes, and tears. Replace defective filter element.

Note: With air cleaner disassembled, check air cleaner components for damage. Replace if necessary. Make sure rubber breather tube in base plate is securely in place or severe engine damage may occur. Also, make sure carburetor breather hose is routed out through engine vents.

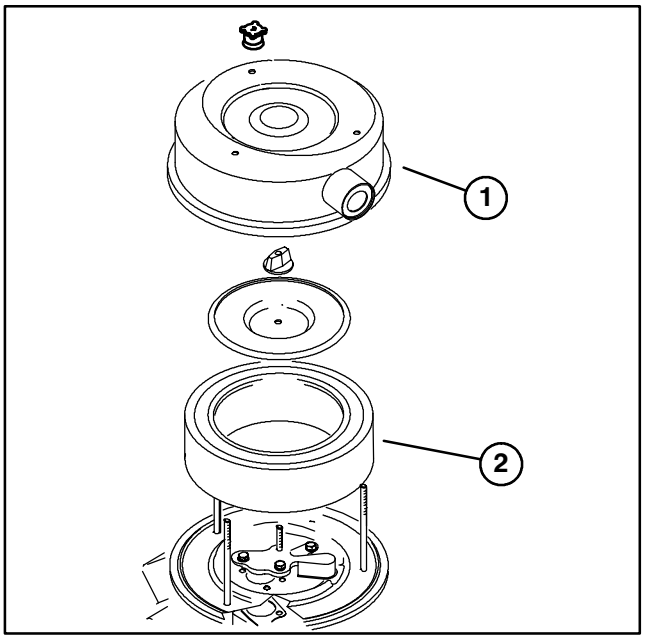

Figure 20
1. Air cleaner cover
2. Paper element

5. Reinstall air cleaner and cover plate.

6. Reinstall air cleaner cover and secure with knobs.

SERVICING REMOTE AIR CLEANER (Fig. 21)

Inspect the dust cup once a week or every 50 hours operation. However, daily or more frequent inspection is required when operating conditions are extremely dusty and dirty.

1. Release latches securing air cleaner cover to air cleaner body. Separate cover from body. Clean inside of air cleaner cover.

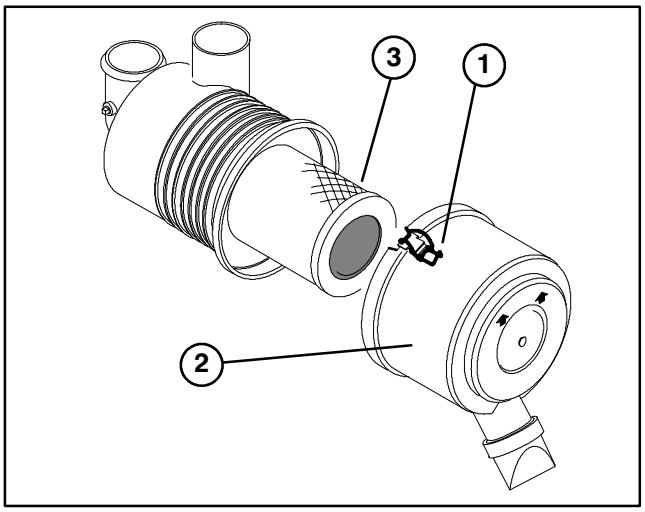

Figure 21
1. Air cleaner latches
2. Dust cup
3. Filter

2. Gently slide filter out of air cleaner body to reduce the amount of dust dislodged. Avoid knocking filter against air cleaner body.

3. Inspect filter and discard if damaged. Do not wash or reuse a damaged filter.

4. Service the air cleaner filter every 400 hours (more frequently in extreme dusty or dirty conditions). Do not over service air filter.

Washing Method

A. Prepare a solution of filter cleaner and water and soak filter element about 15 minutes. Refer to directions on filter cleaner carton for complete information.

B. After soaking filter for 15 minutes, rinse it with clear water. Maximum water pressure must not exceed 40 psi to prevent damage to the filter element. Rinse filter from clean side to dirty to side.

C. Dry filter element using warm, flowing air (160°F) max), or allow element to air–dry. Do not use a light bulb to dry the filter element because damage could result.

Compressed Air Method

A. Blow compressed air from inside to the outside of dry filter element. Do not exceed 100 psi to prevent damage to the element.

B. Keep air hose nozzle at least 2" from filter and move nozzle up and down while rotating the filter element. Inspect for holes and tears by looking through the filter toward a bright light.

5. Inspect new filter for shipping damage. Check sealing end of filter. Do not install a damaged filter.

6. Insert new filter properly into air cleaner body. Make sure filter is sealed properly by applying pressure to outer rim of filter when installing. Do not press on flexible center of filter.

7. Reinstall cover and secure latches. Make sure cover is positioned with TOP side up.

ADJUSTING THROTTLE CONTROL (Fig. 22)

Proper throttle operation is dependent upon proper adjustment of throttle control. Before adjusting the carburetor, assure the throttle control is operating properly.

1. Pivot seat upward.

2. Loosen cable clamp screw securing cable to engine.

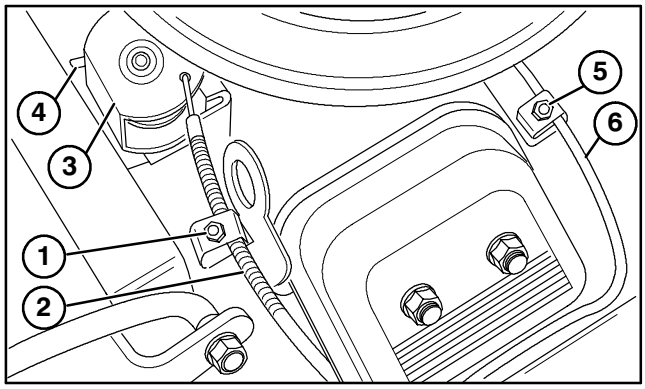

Figure 22

1. Throttle casing clamp screw
2. Throttle cable
3. Swivel
4. Stop
5. Choke casing clamp screw
6. Choke cable

3. Move remote throttle control lever forward to FAST position.

4. Pull firmly on throttle cable until back of swivel contacts stop.

5. Tighten cable clamp screw and check engine RPM setting.

High Idle: 3150 $\pm$ 50
Low Idle: 1750 $\pm$ 50

ADJUSTING CHOKE CONTROL (Fig. 22)

1. Pivot seat upward.

2. Loosen cable clamp screw securing cable to engine.

3. Move remote choke control lever forward to CLOSED position.

4. Pull firmly on choke cable until choke butterfly is completely closed, then tighten cable clamp screw.

REPLACING SPARK PLUGS (Fig. 23)

Replace spark plugs after every 800 operating hours or yearly, which ever occurs first. Recommended air gap is 0.030".
Correct spark plug to use is a Champion RC 12YC.

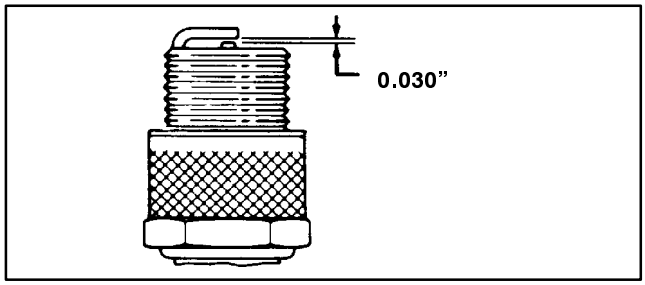

Figure 23

Note: The spark plug usually lasts a long time; however, the plug should be removed and checked whenever the engine malfunctions.

1. Clean area around spark plugs so foreign matter cannot fall into cylinder when spark plug is removed.

2. Pull spark plug wires off spark plugs and remove plugs from cylinder head.

3. Check condition of side electrode, center electrode, and center electrode insulator to assure there is no damage.

I**MPORTANT: A cracked, fouled, dirty or otherwise malfunctioning spark plug must be replaced. Do not sand blast, scrape, or clean electrodes by using a wire brush because grit may eventually release from the plug and fall into the cylinder. The result is usually a damaged engine.**

4. Set air gap between center and side of electrodes at 0.030". Install correctly gapped spark plug w/gasket seal, and tighten plug to 200 in–lb. If torque wrench is not used, tighten plug firmly.

CLEANING CYLINDER HEAD FINS

To avoid overheating and possible engine damage, cooling fins on cylinder head must be kept clean.

CHANGING HYDRAULIC SYSTEM OIL AND FILTER (Fig. 24--25)

Normally, change hydraulic oil and filter after every 400 operating hours. If oil becomes contaminated, contact your local TORO distributor because the system must be flushed. Contaminated oil looks milky or black when compared to clean oil.

1. Park the machine on a level surface and turn the engine off.

2. Remove screws securing side panels from right and left sides of machine and remove panels.

Note: Place a funnel or trough under drain plug, to direct oil into drain pan and prevent hydraulic oil from running onto machine components.

3. Remove drain plug from reservoir and let hydraulic oil flow into drain pan. Reinstall and tighten plug when hydraulic oil stops draining.

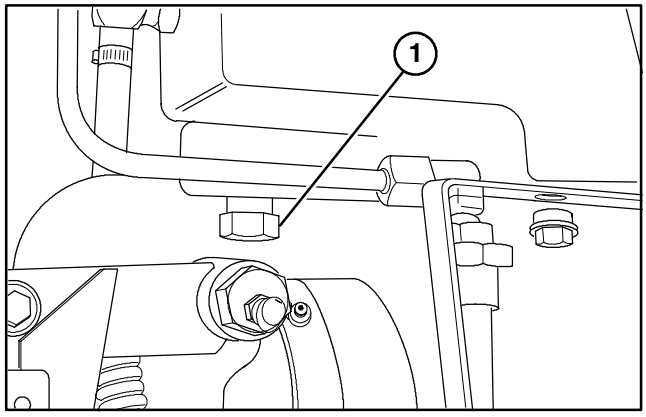

Figure 24
1. Hydraulic reservoir drain plug

4. Clean area around filter mounting area. Place drain pan under filter and remove filter.

5. Lubricate the sealing gasket,on replacement filter with Mobil 424 hydraulic fluid, and hand turn it on until gasket contacts filter head. Then tighten 3/4 turn further. Filter should now be sealed.

6. Fill hydraulic tank with hydraulic oil until level is up to top of cone point on tank screen. **DO NOT OVERFILL.** Refer to CHECK HYDRAULIC SYSTEM, Page 11.

7. Run engine until lift cylinder extends and retracts and forward and reverse wheel motion is achieved.

8. Stop the engine and check the oil level in reservoir, add oil if necessary.

9. Check all connections for leaks.

10. Dispose of oil properly.

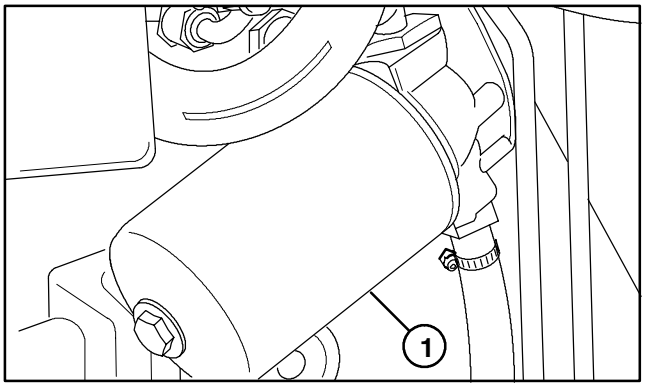

Figure 25
1. Hydraulic filter

CHECKING HYDRAULIC LINES AND HOSES

Inspect hydraulic lines and hoses daily for leaks, kinked lines, loose mounting supports, wear, loose fittings, weather deterioration and chemical deterioration. Make all necessary repairs before operating.

WARNING

Keep body and hands away from pin hole leaks or nozzles that eject high pressure hydraulic fluid. Use cardboard or paper to find hydraulic leaks. Hydraulic fluid escaping under pressure can penetrate skin and cause injury. Fluid accidentally injected into the skin must be surgically removed within a few hours by a doctor familiar with this form of injury or gangrene may result.

MAINTENANCE

CHARGING HYDRAULIC SYSTEM (Fig. 26)

Whenever a hydraulic component is repaired or replaced the hydraulic oil filter should be changed and hydraulic system charged.

IMPORTANT: Make sure hydraulic reservoir is filled with oil at all times when charging hydraulic system.

1. Park the machine on a level surface and turn the engine off.

2. Remove (3) screws securing side panel to right side of machine and remove panel.

3. Loosen lock nut on spring adjusting pin until bearing moves freely from cam on lever, allowing pump shaft freedom to rotate during start–up.

4. Raise one rear wheel off floor and place support blocks under frame.

5. Start engine and set throttle to allow engine to run at slow idle approximately 1800 rpm.

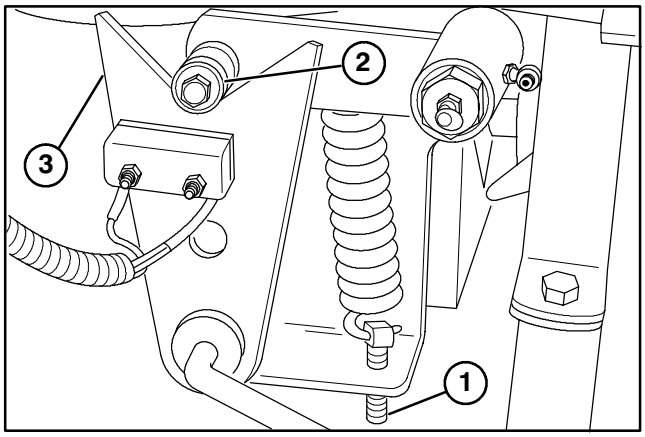

Figure 26
1. Spring adjusting pin
2. Bearing
3. Cam

6. Actuate the lift valve lever until the lift cylinder rod moves in and out several times. If cylinder rod does not move after 10–15 seconds or pump emits abnormal sounds, shut the engine off immediately and determine cause or problem. Inspect for the following:

A. Loose filter or suction lines.

B. Blocked suction line.

C. Faulty charge relief valve.

D. Faulty charge pump.

If cylinder moves in 10–15 seconds, proceed to step 7.

Note: A hydrostatic transmission service manual (bulletin No. 9646) and a repair manual (bulletin No. 9659) can be obtained from:

Sundstrand Corporation
2800 East 13th Street
Ames, Iowa 50010

7. Operate the traction pedal in forward and reverse directions. If wheel rotates in proper direction, stop engine and adjust the spring adjusting pin lock nut. Adjust traction neutral position: refer to Adjusting Traction Drive For Neutral, page 22.

ADJUSTING STEERING CHAIN (Fig. 27)

1. Place the front wheel in the straight ahead position.

2. Adjust the locknuts until the chain is snug on both sides of sprocket.

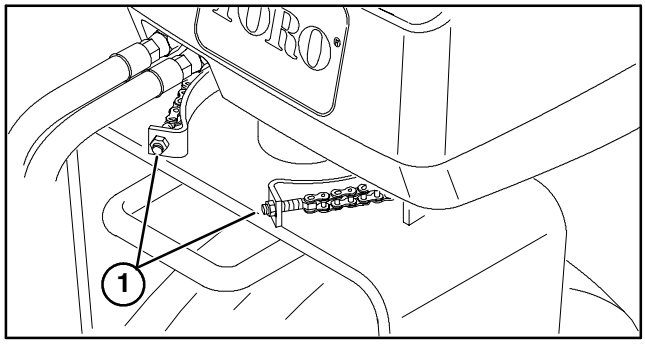

Figure 27
1. Adjusting nuts

3. Turn the steering wheel full left and full right to be sure the chain does not bind or hang up in either direction. Readjust as required.

REPLACING FUEL FILTER (Fig. 28)

An in–line filter is incorporated into the fuel line between the fuel tank and carburetor. Replace the filter every 800 hours or sooner if fuel flow is restricted. Be sure the arrow on the filter is pointing away from the fuel tank (toward carburetor).

1. Remove (3) screws securing side panel to left side of machine and remove panel.

2. Close fuel shut off valve, loosen the hose clamp on the carburetor side of filter and remove the fuel line from the filter.

3. Place a drain pan under filter, loosen the remaining hose clamp and remove filter.

4. Install the new filter with arrow on the filter body pointing away from the fuel tank (toward carburetor).

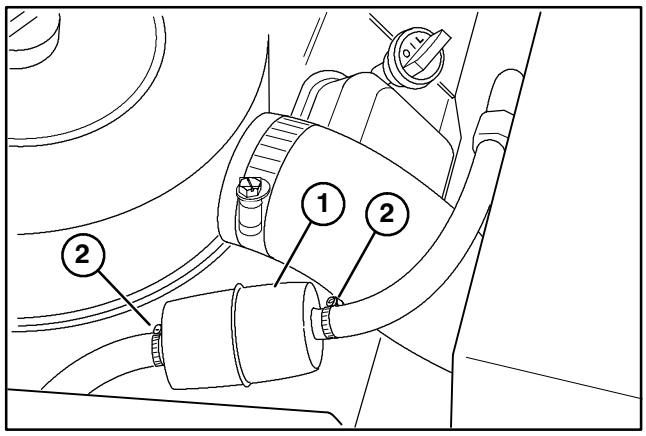

Figure 28
1. Fuel Filter
2. Hose Clamps

ADJUSTING TRACTION DRIVE FOR NEUTRAL (Fig. 29)

If the machine "creeps" when the traction pedal is in the neutral position, the traction cam must be adjusted.

1. Park the machine on a level surface and turn the engine off.

2. Remove (3) screws securing side panel to right side of machine and remove panel.

3. Raise one rear wheel off floor and place support blocks under frame.

4. Loosen locknut on traction adjustment cam.

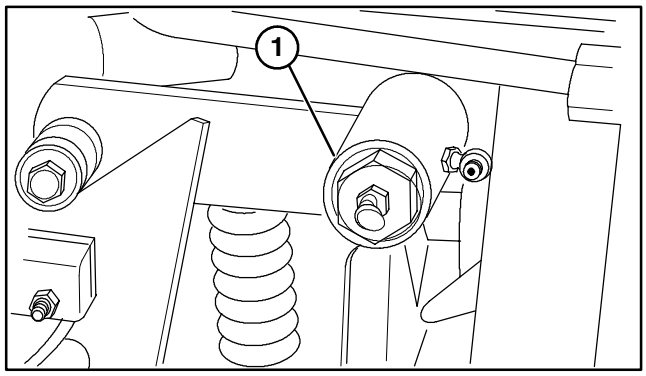

Figure 29
1. Traction adjustment cam

5. Start engine and rotate cam hex in both directions to determine mid position of neutral span.

WARNING

Engine must be running so final adjustment of the traction adjustment cam can be performed. To guard against possible personal injury, keep hands, feet, face and other parts of the body away from the muffler, other hot parts of the engine, and other rotating parts.

6. Tighten locknut securing adjustment.

7. Stop the engine. Remove jack stands and lower the machine to the shop floor. Test drive the machine to make sure it does not creep.

ADJUSTING PEDAL FOR FORWARD (Fig. 30)

The pedal must be adjusted for forward if jam nuts on control rod are loosened or if pedal is removed.

1. Park the machine on a level surface and turn the engine off.

2. Make sure pump is in neutral.

3. Loosen jam nuts on control rod.

4. Press down on forward pad of pedal until pedal rod contacts footrest. Tighten jam nuts.

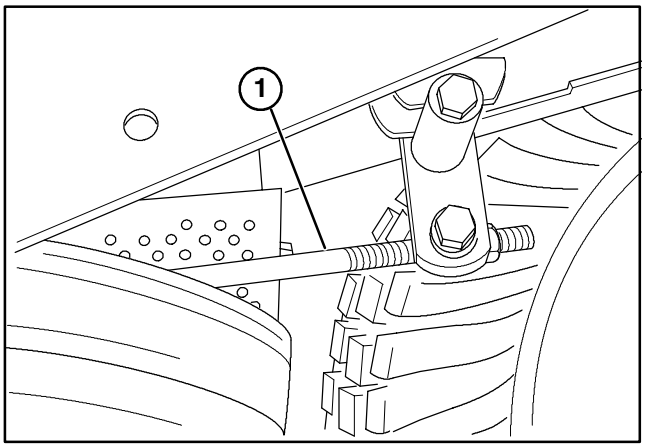

Figure 30
1. Control rod

ADJUSTING STEERING WHEEL TILT LEVER (Fig. 31)

If steering wheel tilt lever does not lock after adjusting wheel position an adjustment to the lever is required.

1. Loosen capscrew securing lever to locking pin.

2. Lift lever off hex on locking pin. Rotate lever counterclockwise to next hex on pin.

3. Push lever onto locking pin hex and secure with capscrew.

4. Check adjustment and repeat if necessary.

MAINTENANCE

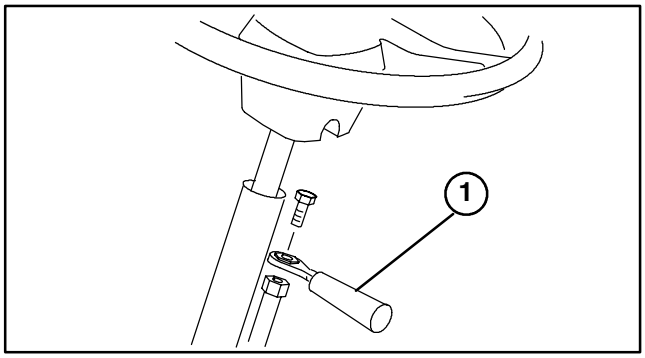

Figure 31

1. Lever

ADJUSTING PARKING BRAKE (Fig. 32)

The brakes have been set, at the factory, for optimum performance but after use and wear, an adjustment may be required.

1. Park the machine on a level surface, turn engine off and block wheels.

2. Loosen jam nut on adjustment rod clevis.

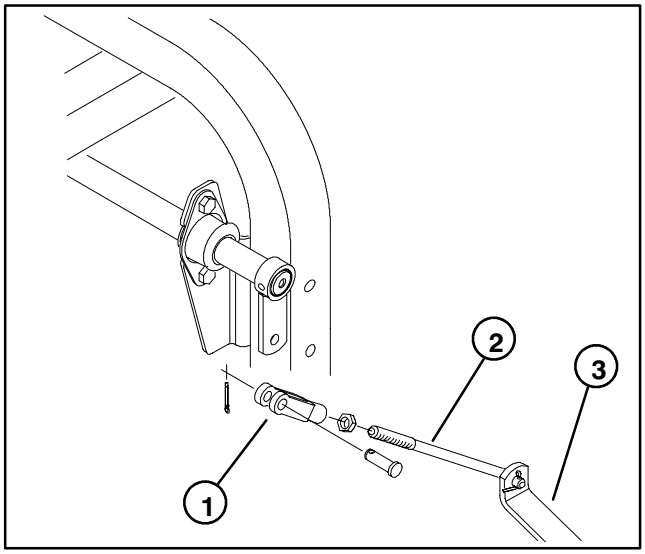

Figure 32

1. Adjustment rod clevis
2. Adjustment rod
3. Brake arm

3. Remove cotter pin and clevis pin retaining adjustment rod clevis to brake arm.

4. Increase or decrease adjustment rod length by rotating clevis. Reinstall adjusting rod clevis with clevis pin and new cotter pin. Secure jam nut.

5. Repeat procedure on opposite adjustment rod clevis.

6. Check adjustment and re–adjust, if required.

BATTERY STORAGE

If the machine will be stored for more than 30 days, remove the battery and charge it fully. Either store it on a shelf or on the machine. Leave the cables disconnected if stored on the machine. Store the battery in a cool atmosphere to avoid quick deterioration of the charge in the battery. To prevent battery from freezing, make sure it is fully charged. The specific gravity of a fully charged battery is 1.250.

BATTERY CARE

1. Battery electrolyte level must be properly maintained and the top of the battery kept clean. If the machine is stored in a location where temperatures are extremely high, the battery will run down more rapidly than if the machine is stored in a location where temperatures are cool.

2. Keep top of battery clean by washing periodically with a brush dipped in ammonia or bicarbonate of soda solution. Flush the top surface with water after cleaning. Do not remove the fill cap while cleaning.

3. Battery cables must be tight on terminals to provide good electrical contact.

WARNING

Connecting cables to the wrong post could result in personal injury and/or damage to the electrical system.

4. If corrosion occurs at terminals, disconnect cables, negative (–) cable first and scrape clamps and terminals separately. Reconnect cables, positive (+) cable first and coat terminals with petroleum jelly.

5. Check the electrolyte level every 50 operating hours or, if machine is in storage, every 30 days.

6. Maintain cell level with distilled or demineralized water. Do not fill cells above fill line.

CAUTION

Wear safety goggles and rubber gloves when working with electrolyte. Charge the battery in a well ventilated place so gasses produced while charging can dissipate. Since the gases are explosive, keep open flames and electrical spark away from the battery; do not smoke. Nausea may result if the gases are inhaled. Unplug charger from electrical outlet before connecting to or disconnecting charger leads from battery posts.

HYDRAULIC SCHEMATIC

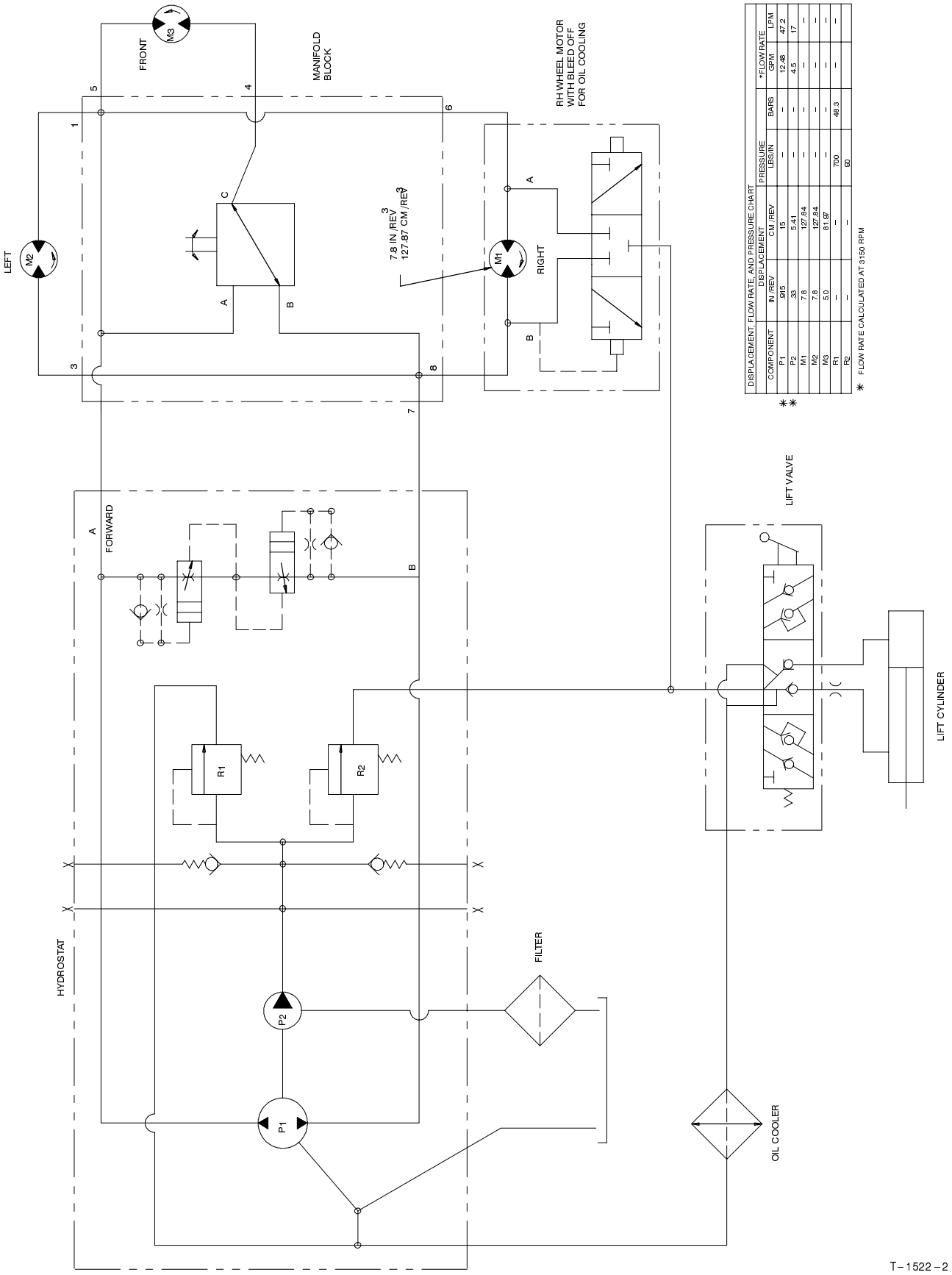

DISPLACEMENT, FLOW RATE AND PRESSURE CHART

COMPONENT	DISPLACEMENT IN./REV	DISPLACEMENT CM./REV	PRESSURE LBS./IN	PRESSURE BARS	*FLOW RATE GPM	*FLOW RATE LPM
P1	.915	15	–	–	12.46	47.2
P2	.33	5.41	–	–	4.5	17
M1	.78	127.84	–	–	–	–
M2	.78	127.84	–	–	–	–
M3	5.0	81.96	–	–	–	–
R1	–	–	700	48.3	–	–
R2	–	–	90			

**

* FLOW RATE CALCULATED AT 3150 RPM

ELECTRICAL SCHEMATIC

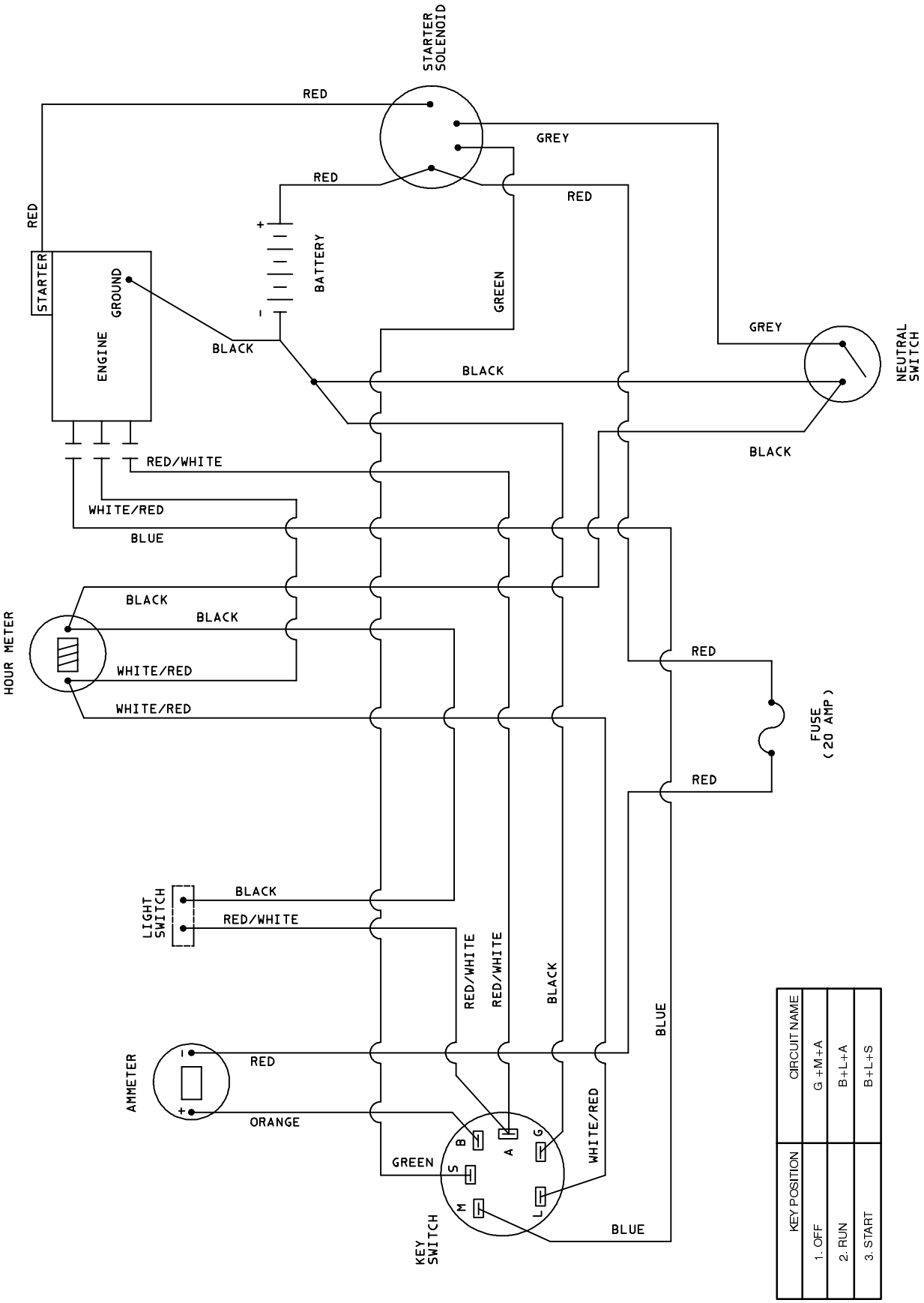

MAINTENANCE SCHEDULE

Minimum Recommended Maintenance Intervals

Maintenance Procedure	Maintenance Interval & Service			
	Every 25hrs	Every 100hrs	Every 400hrs	Every 800hrs
Check Battery Fluid Level	●			
Check Battery Cable Connections	●			
† Change Engine Oil	●			
Lube Front Wheel Bearing	●			
Lube Traction Control Linkage	●			
Replace Engine Oil Filter		●		
Inspect Remote Air Filter Element		●		
Inspect Engine Air Filter Element		●		
Lube Steering Shaft Grease Fitting		●		
Check Steering Chain Adjustment		●		
† Torque Wheel Lug Nuts		●		
Change Hydraulic Oil			●	
† Replace Hydraulic Oil Filter			●	
Replace Remote Air Filter Element			●	
Replace Engine Air Filter Element			●	
Replace Spark Plugs				●
Replace Fuel Filter				●
Decarbon Combustion Chamber				●
Adjust Valves and Torque Head				●
Check Engine RPM (idle and full throttle)				●
Drain and Clean Fuel Tank				●

† Initial break in at 8 hours

Replace Moving Hoses Replace Traction Safety Switch	**Annual Recommendations:** Items listed are recommended every 1500 hours or 2 years, whichever occurs first.

IDENTIFICATION AND ORDERING

MODEL AND SERIAL NUMBERS

The SAND PRO 5000 has two identification numbers: a model number and a serial number. These numbers are stamped into a plate located on left frame rail. In any correspondence concerning the unit, supply the model and serial numbers to ensure correct information and replacement parts are obtained.

Note: Do not order by reference number if a parts catalog is being used; use the part number.

To order replacement parts from an authorized TORO Distributor, supply the following information:

1. Model and serial numbers.

2. Part number, description, and quantity of parts desired.

The Toro Commercial Products Two Year Limited Warranty

The Toro Company warrants your 1996 or newer Toro Commercial Product ("Product") purchased after January 1, 1997, to be free from defects in materials or workmanship for the period of time listed below. Where a warrantable condition exists, Toro will repair the Product at no cost to you including diagnosis, labor, parts, and transportation. This warranty begins on the date the Product is delivered to the original retail purchaser.

Warranty Duration: Two years or 1500 operational hours*, whichever occurs first.
***Product equipped with hour meter**

Owner Responsibilities:

As the Product owner, you are responsible for required maintenance and adjustments stated in your Owner's Manual. Failure to perform required maintenance and adjustments can be grounds for disallowing a warranty claim.

Instructions for Obtaining Warranty Service:

You are responsible for notifying the Commercial Products Distributor or Authorized Commercial Products Dealer from whom you purchased the Product as soon as you believe a warrantable condition exists.

If you need help locating a Commercial Products Distributor or Authorized Dealer, or if you have questions regarding your warranty rights or responsibilities, you may contact us at:

Toro Commercial Products Service Department
8111 Lyndale Avenue South
Minneapolis, MN, 55420–1196
Telephone: (612) 888–8801
Facsimile: (612) 887–8258
E–Mail: Commercial.Service@Toro.Com

Maintenance Parts:

Parts scheduled for replacement as required maintenance ("Maintenance Parts"), are warranted for the period of time up to the scheduled replacement time for that part.

Items/Conditions Not Covered:

Not all product failures or malfunctions that occur during the warranty period are defects in materials or workmanship. The items / conditions listed below are not covered by this warranty:

- Product failures which result from the use of non–Toro replacement parts, or from installation and use of add–on, modified, or unapproved accessories are not covered.
- Product failures which result from failure to perform required maintenance and/or adjustments are not covered.
- Product failures which result from operating the Product in an abusive, negligent or reckless manner are not covered.
- This warranty does not apply to parts subject to consumption through use unless found to be defective. Examples of parts which are consumed, or used up, during normal Product operation include, but are not limited to, blades, reels, bedknives, tines, spark plugs, castor wheels, tires, filters, belts, etc.
- This warranty does not apply to failures caused by outside influence. Items considered to be outside influence include, but are not limited to, weather, storage practices, contamination, use of unapproved coolants, lubricants, additives, or chemicals, etc.
- This warranty does not apply to normal "wear and tear" items. Normal "Wear and Tear" includes, but is not limited to, damage to seats due to wear or abrasion, worn painted surfaces, scratched decals or windows, etc.

Other Legal Disclaimers:

The above remedy of product defects through repair by an authorized distributor or dealer is the purchaser's sole remedy for any defect. This warranty gives you specific legal rights, and you may also have other rights which vary from state to state.

Except for the Emissions warranty referenced below, if applicable, there is no other express warranty. All implied warranties of merchantability and fitness for use are limited to the duration of the express warranty.

Some states do not allow limitations on how long an implied warranty lasts, so the above limitation may not apply to you.

The Toro Company is not liable for indirect, incidental or consequential damages in connection with the use of the Product, including any cost or expense of providing substitute Product or service during periods of malfunction or non–use.

Some states do not allow the exclusion of incidental or consequential damages, so the above exclusion may not apply to you.

Note to California residents: The Emissions Control System on your Product may be covered by a separate warranty meeting requirements established by the U.S. Environmental Protection Agency (EPA), or the California Air Resources Board (CARB). The hour limitations set forth above do not apply to the Emissions Control System Warranty. Refer to the California Emission Control Warranty Statement printed in your Owner's Manual or contained in the engine manufacturer's documentation for details.