Form No. 3377-517 Rev A

TORO®

Count on it.

Parts Catalog

MM-858H-S Mortar Mixer

Canada

Model No. 68020C—Serial No. 313000001 and Up

Register at www.Toro.com.
Original Instructions (EN)

3377-517 A

Ordering Replacement Parts

To order replacement parts, please supply the part number, the quantity, and the description of each part desired.

Understanding Reference Numbers

Each identified part in an illustration has a reference number. The reference number for a part also appears in the parts list, along with other information about the part.

This catalog uses two special reference number formats, one to indicate parts in a service assembly and another to indicate the quantity of a given part in an illustration.

Service Assembly Reference Numbers

Parts in service assemblies have reference numbers in the form a:b. The a represents the reference number of the entire service assembly and the b represents a sequential number unique to each part within the service assembly.

For example, a wheel assembly might be identified by reference number 6, the tire by 6:1, the valve by 6:2, and the wheel by 6:3. When you order the assembly identified by reference number 6, you receive all parts identified by reference numbers 6:1,6:2, and 6:3. However, you may also order any part individually. Reference numbers of this type appear in illustration and in parts lists.

Reference Numbers Indicating Quantity

In an illustration, if a reference number indicates more than one part, the reference number has the form nX y. The n represents the quantity of the part, the X is the multiplication symbol, and the y represents the reference number.

For example, in an illustration, the reference number 2X 37 means that two of the parts identified by reference number 37 are indicated.

List of Abbreviations

AR: as required

ASM: assembly

BBC: blade brake control

BHTF: button head thread forming

CARR: carriage

CCW: counter clockwise

CW: clockwise

DEG: degrees

DPA: Dual Point Adjustment

ECM: electronic control module

EXT: external

FH: flat head

GA: gauge

HD: heavy-duty

HF: hex flange

HH: hex head

HHF: hex head flange

HHFTF: hex head flange thread forming

HJ: hex jam

HLH: hex lag head

HOC: height-of-cut

HSBH: hex socket button head

HSFH: hex socket flat head

HSH: hex socket head

HWH: hex washer head

HWHTF: hex washer head thread forming

HYD: hydraulic

LH: left hand

LP: Liquefied Petroleum Gas

LPG: Liquefied Petroleum Gas

NI: nylon insert

NPTF: national pipe thread fine

PFH: phillips flat head

PPH: phillips pan head

PPHTF: phillips pan head thread forming

PRH: phillips round head

PTH: phillips truss head

PTO: power-take-off

RH: right hand

ROPS: roll-over protection system

RRB: rear roller brush

SFH: slotted fillister head

SHH: slotted hex head

SHWH: slotted hex washer head

SPH: slotted pan head

SQH: square head

SRH: slotted round head

STD: standard

TAP: self tapping

TTH: torx truss head

Contents

Frame and Axle Assembly 4
Hub Assembly No. 125-8171 5
Drum Assembly 6
Engine and Pinion Assembly 7
Pinion Assembly No. ST21471 8
Cowl Assembly 9
Trailer Light Kit Assembly 10
Attachments and Accessories 11

© 2013—The Toro® Company
8111 Lyndale Avenue South
Bloomington, MN 55420

Contact us at www.Toro.com.
Printed in the USA.
All Rights Reserved

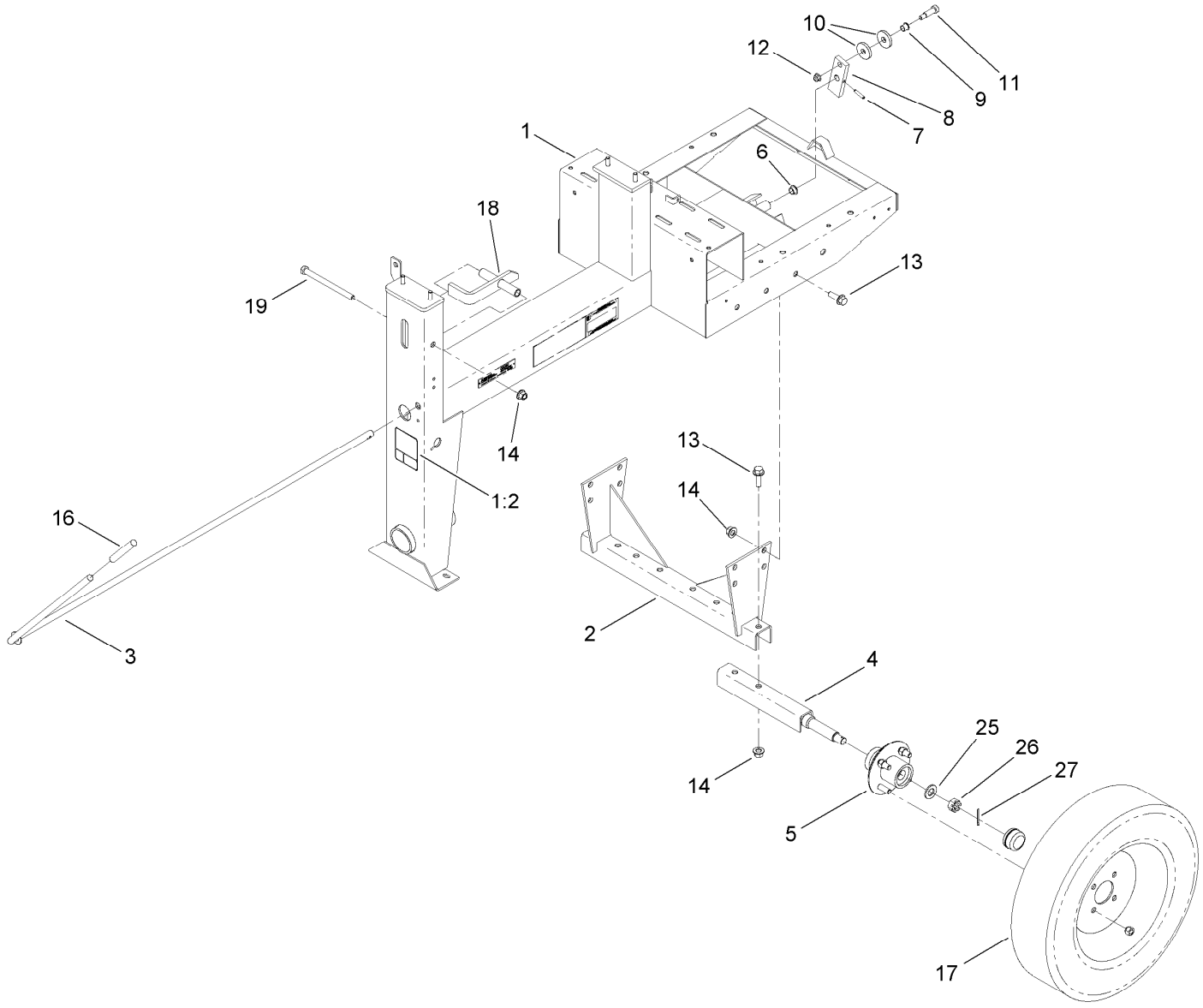

Frame and Axle Assembly

Ref.	Part Number	Qty.	Description
1	127-1681	1	Frame ASM
1:2	125-8216	1	Decal-Safety Chain, Towing
2	125-8219-03	1	Support-Axle
3	ST39570-03	1	Lever-Clutch
4	ST22512-03	2	Axle-Half
5	125-8171	2	Hub
6	ST32116	1	Bushing-Flange
7	32121-69	1	Pin-Spring
8	ST39446-03	1	Link-Clutch
9	ST32099	1	Bushing-Flange
10	ST26326	2	Washer-Flat
11	ST81153	1	Screw-HSBH
12	104-8301	1	Nut-Flange, NI
13	100-6116	8	Screw-HHF
14	99-5107	9	Nut-Lock
16	ST34687	1	Grip-Handle
17	ST32307	2	Tire And Rim ASM
18	ST24027-03	1	Latch-Drum
19	325-33	1	Screw-HH
25	3256-28	2	Washer-Flat
26	ST80054	2	Nut
27	3272-13	2	Pin-Cotter

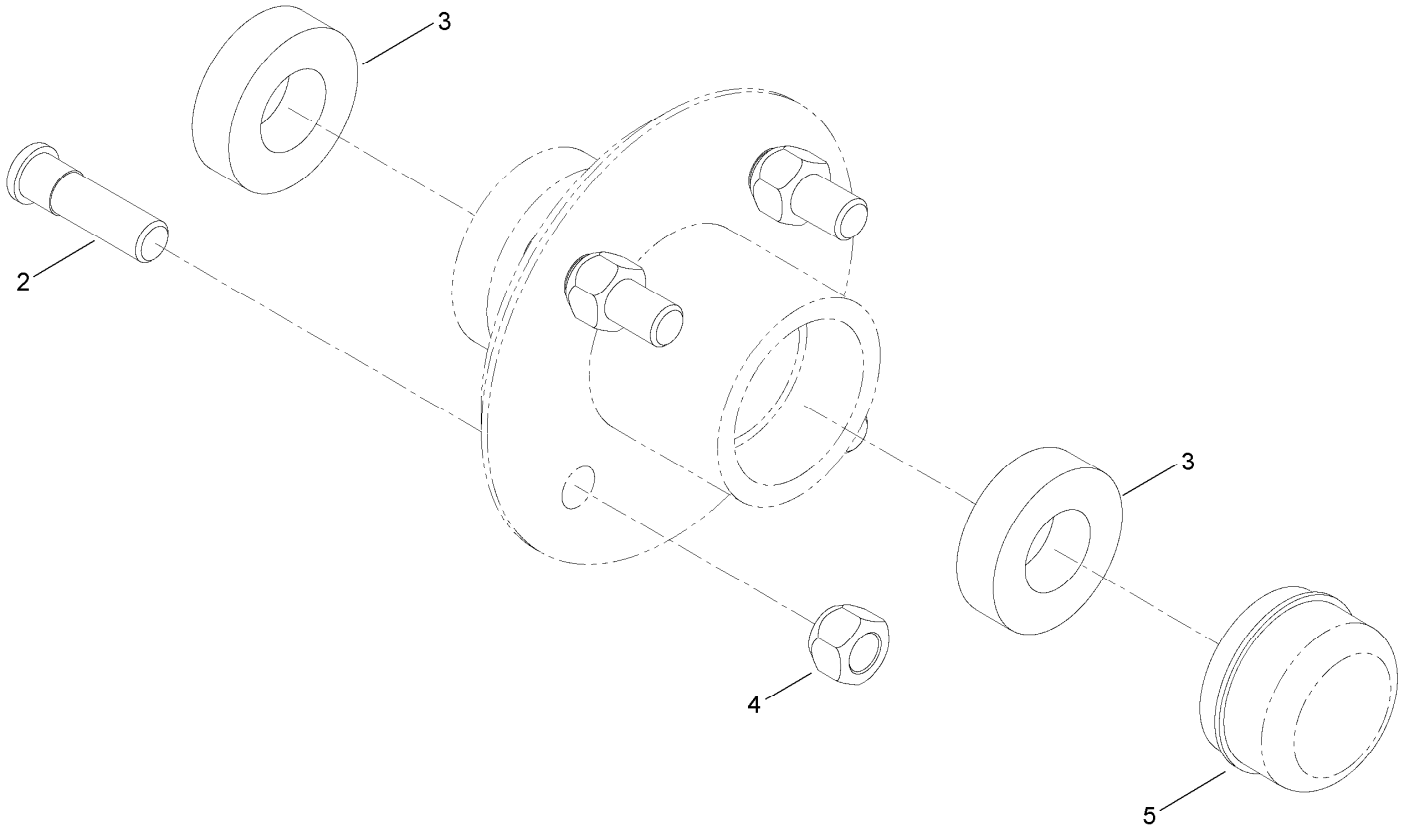

Hub Assembly No. 125-8171

Ref.	*Part Number*	*Qty.*	*Description*
2	ST39190	4	Stud-Wheel
3	ST32233	2	Bearing-Roller
4	ST80045	4	Nut-Lug
5	ST34573	1	Cap-Dust

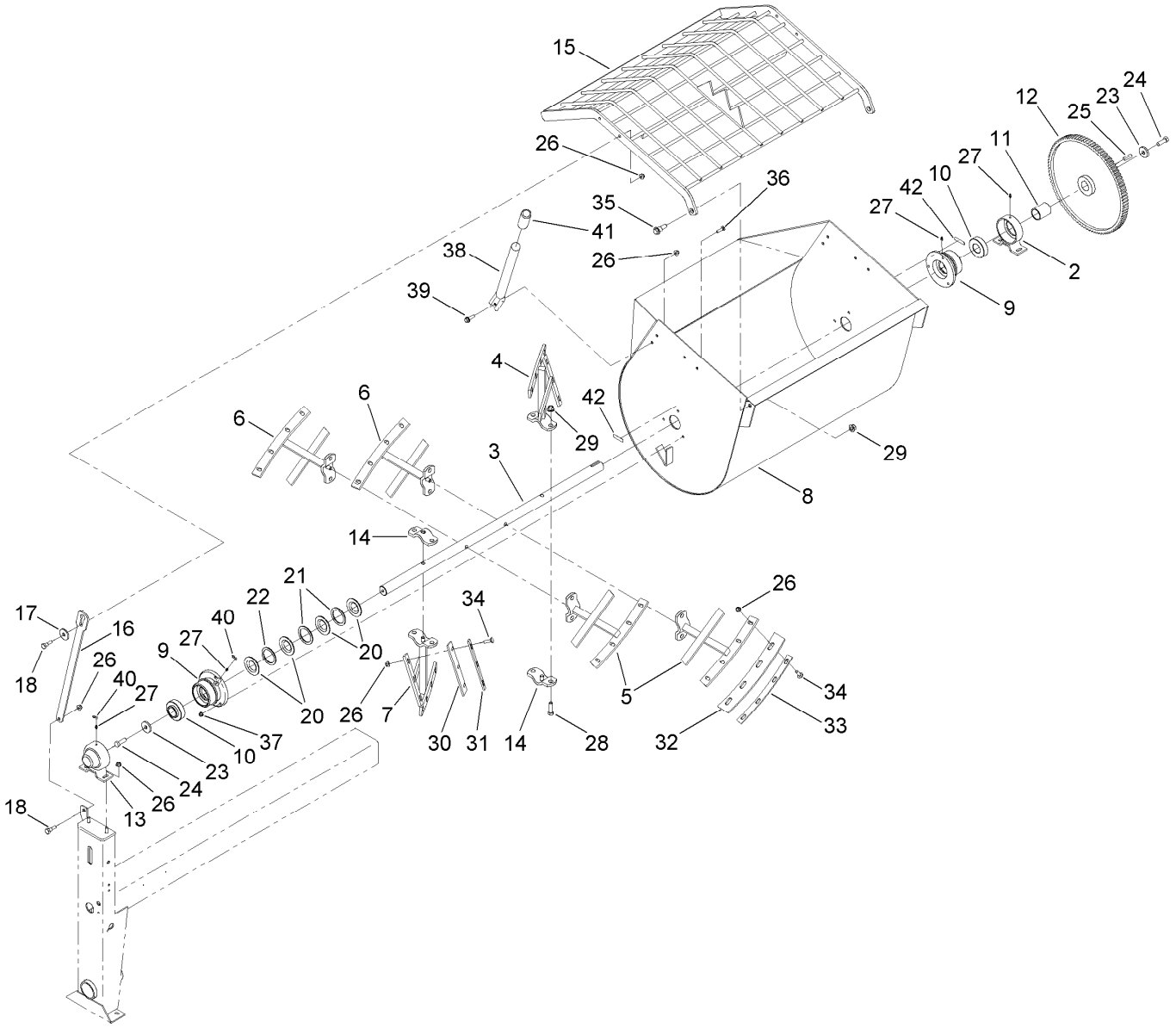

Drum Assembly

Ref.	Part Number	Qty.	Description
2	ST24021-03	1	Trunnion
3	ST24212-01	1	Shaft-Drum
4	ST24219-01	1	Paddle
5	ST24220-01	2	Paddle
6	ST24221-01	2	Paddle
7	ST24222-01	1	Paddle
8	ST25943-01	1	Drum
9	ST32326-01	2	Housing-Bearing
10	ST32003	2	Bearing-Ball
11	ST25909	1	Spacer-Shaft, Drum
12	ST26933-03	1	Gear-94 Teeth
13	ST36574-03	1	Trunnion-Capped
14	ST24107-01	2	Clamp
15	125-6269-01	1	Guard-Drum
16	125-6223-03	1	Bar-Guard, Lift
17	106-2008	1	Washer-Thrust
18	80-1300	2	Bolt-Shoulder
20	ST32324	8	Seal-Drum
21	ST24017	4	Washer-Flat
22	ST25881	2	Washer-Split

Ref.	Part Number	Qty.	Description
23	ST26326	2	Washer-Flat
24	325-6	2	Screw-HH
25	ST81060	1	Key-Square
26	104-8301	38	Nut-Flange, NI
27	ST46042	4	Fitting-Grease
28	325-7	8	Screw-HH
29	99-5107	10	Nut-Lock
30	ST24033	2	Blade-Rubber, Short
31	ST24031-01	2	Bar-Backer, Short
32	ST24106	6	Blade-Rubber, Long
33	ST24104-01	6	Bar-Backer, Long
34	3231-25	30	Bolt-CARR
35	116-0780	2	Screw-HHF, Shoulder
36	3230-3	6	Screw-CARR
37	104-8300	6	Nut-Flange, NI
38	ST44347-01	1	Handle-Dump
39	3234-24	2	Screw-HHF
40	ST47001	4	Cap-Plug
41	ST47023	1	Grip-Hand
42	125-8175	2	Decal-Grease

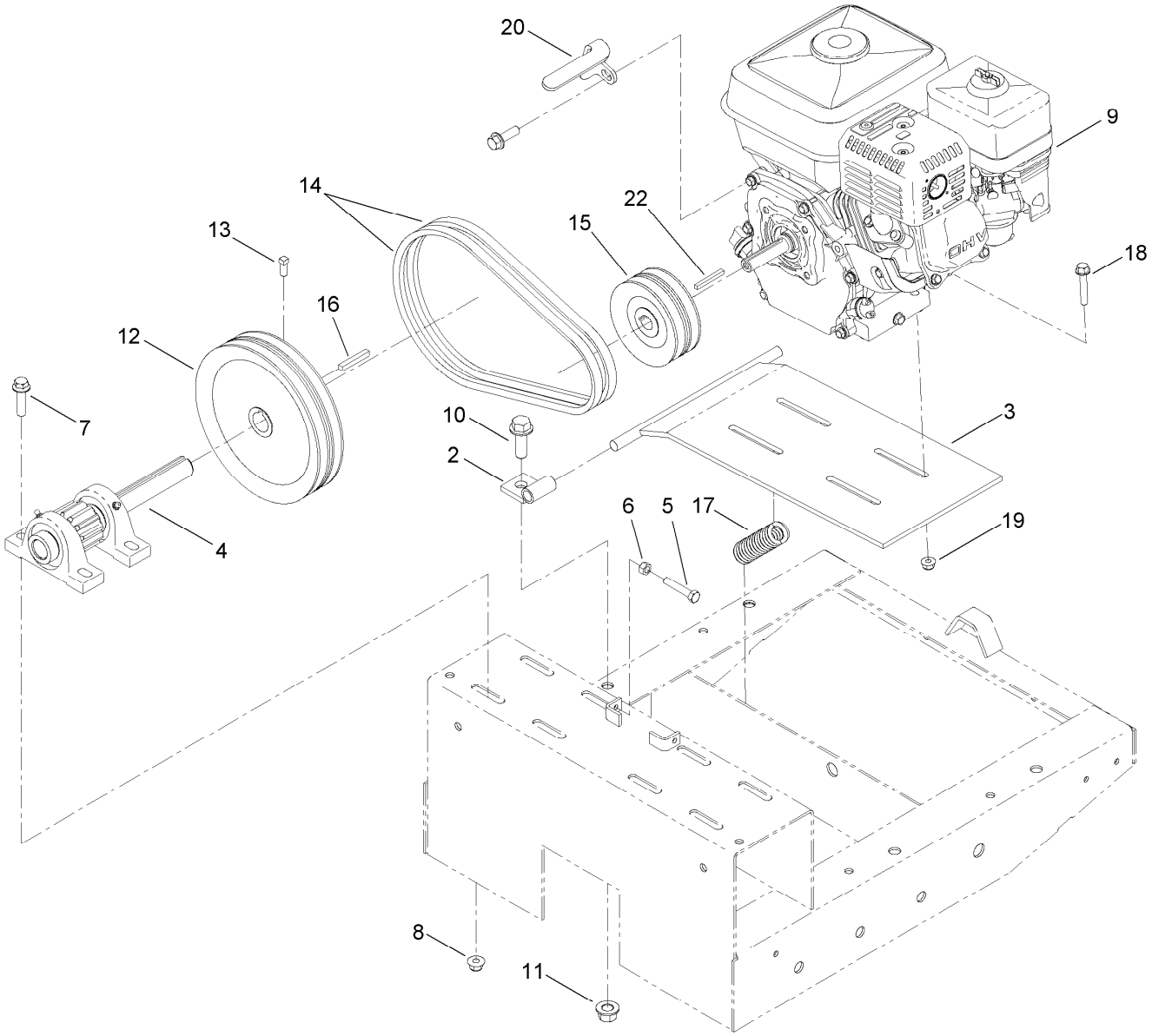

Engine and Pinion Assembly

Ref.	Part Number	Qty.	Description
2	ST57786-03	2	Mount-Motor
3	ST39557-03	1	Base-Motor
4	ST21471	1	Pinion ASM
5	322-41	1	Screw-HH
6	3217-6	1	Nut-Hex
7	114-4681	4	Screw-HHF
8	104-8301	4	Nut-Flange, NI
9	125-4812	1	Engine-Honda, Gx240 ●
10	100-6116	2	Screw-HHF
11	99-5107	2	Nut-Lock

Ref.	Part Number	Qty.	Description
12	ST38450	1	Sheave
13	120-6474	2	Screw-Set, SQH
14	ST34052	2	Belt-V
15	ST38449	1	Sheave
16	7-0238	1	Key-Square
17	ST34849	1	Spring
18	114-4681	4	Screw-HHF
19	104-8301	4	Nut-Flange, NI
20	127-1665-03	1	Guide-Belt
22	7-0238	1	Key-Square

● Obtain parts from www.honda-engines.com

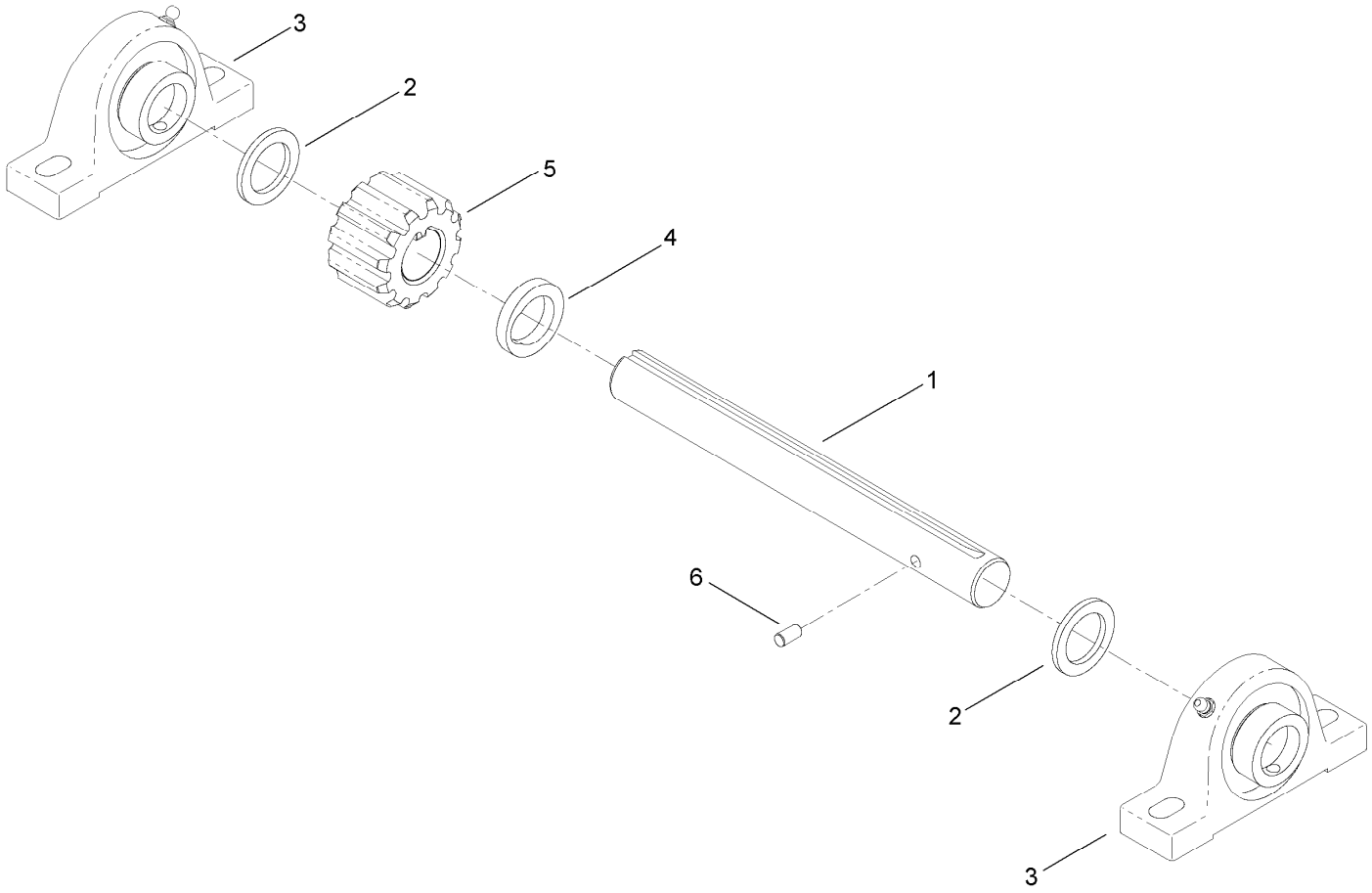

Pinion Assembly No. ST21471

Ref.	*Part Number*	*Qty.*	*Description*
1	ST24036	1	Shaft-Pinion
2	ST24622	2	Washer-Flat
3	ST32208	2	Bearing-Block, Pillow
4	ST38122	1	Washer
5	ST57625	1	Gear-Spur
6	95-0715	1	Pin-Dowel

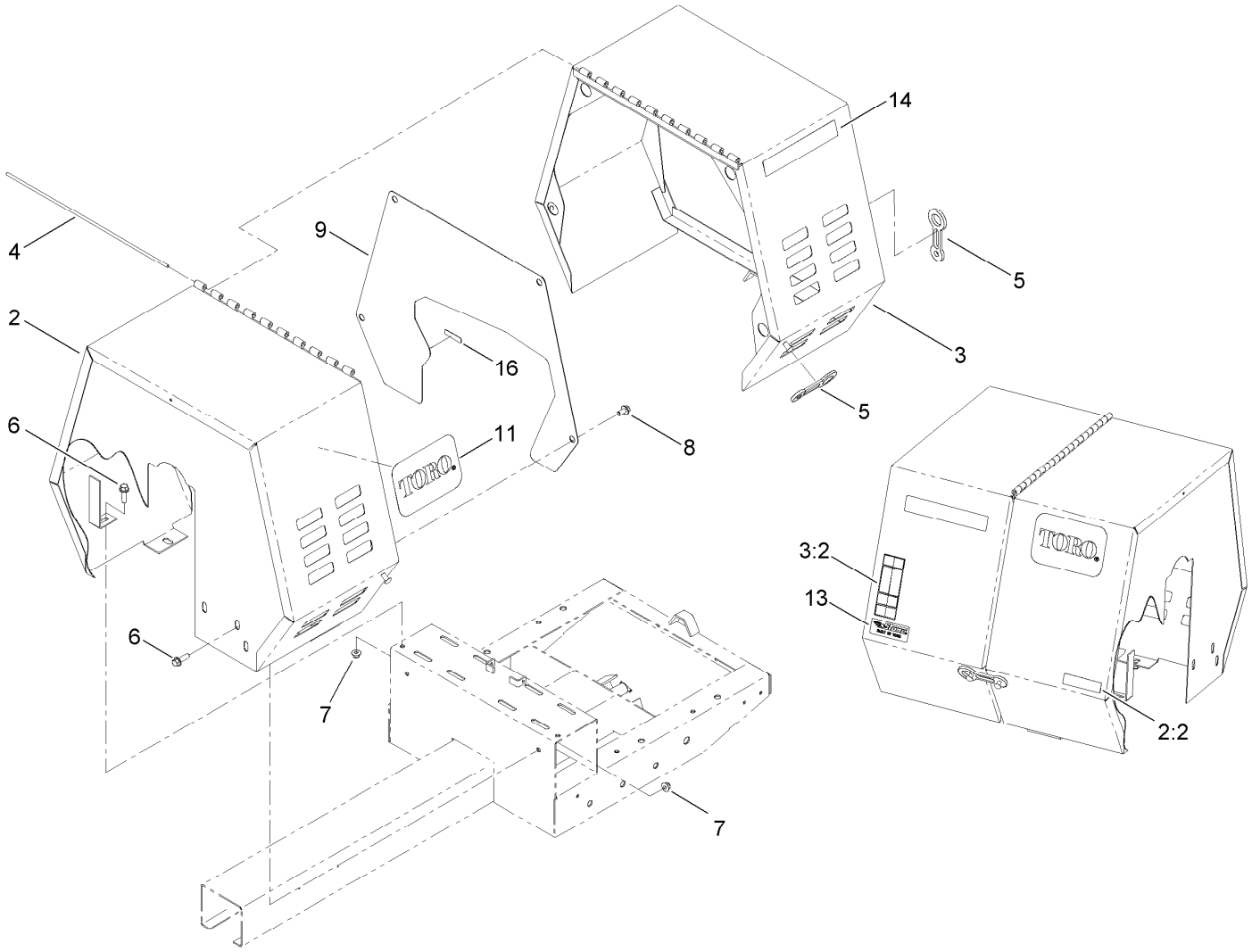

Cowl Assembly

Ref.	*Part Number*	*Qty.*	*Description*
2	127-1683	1	Stationary Cowl ASM
2:2	117-2718	1	Decal-Arrester, Spark
3	127-1685	1	Movable Cowl ASM
3:2	125-4939	1	Decal-Warning
4	ST44368	1	Pin
5	ST47182	3	Latch-Rubber
6	3234-24	6	Screw-HHF
7	104-8301	6	Nut-Flange, NI
8	110-9380	4	Screw-HWH
9	125-6214-03	1	Plate-Access, Belt
11	67-7320	2	Decal
13	125-4942	1	Decal
14	125-4951	2	Decal-Mm-858H
16	125-8175	1	Decal-Grease

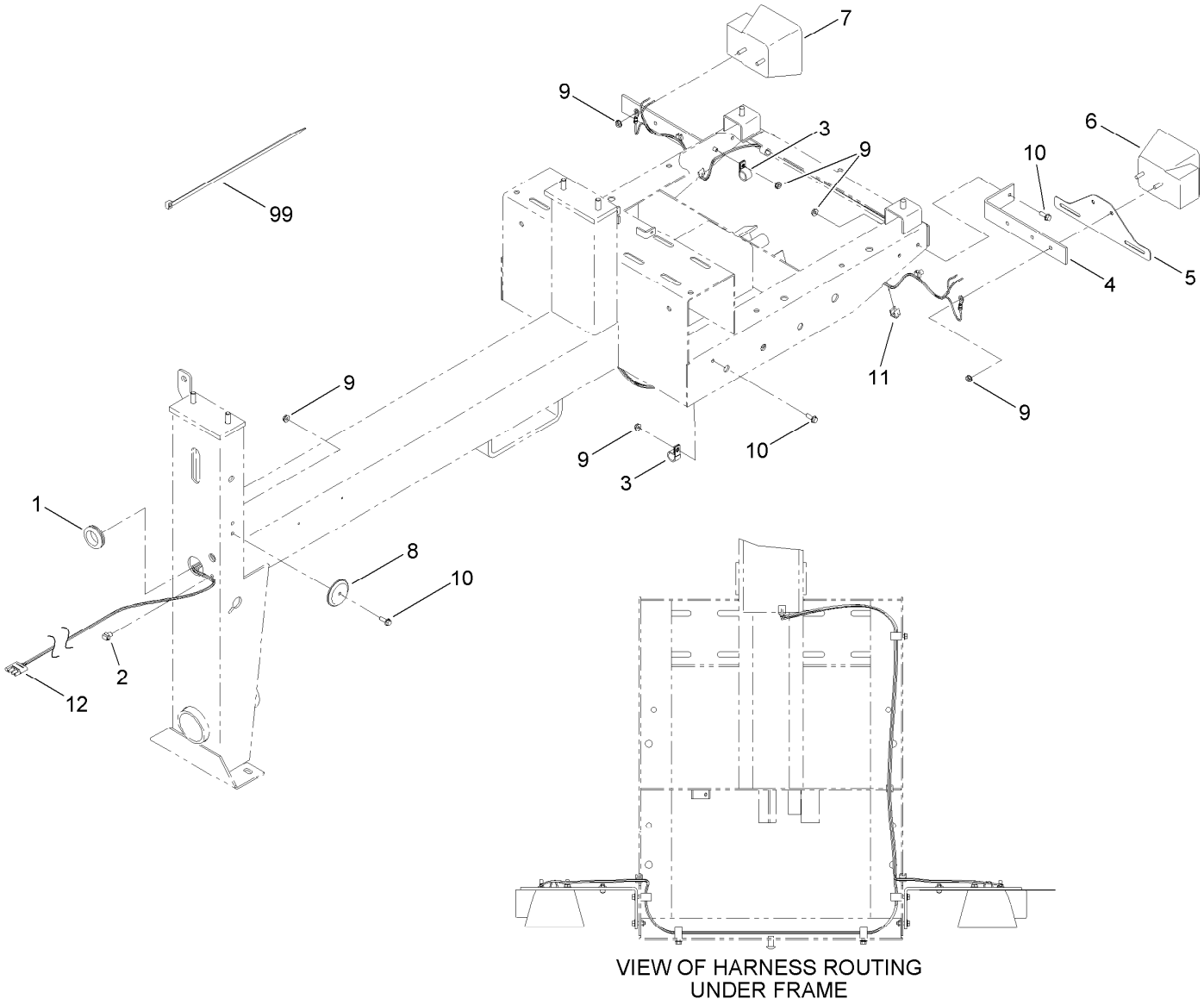

VIEW OF HARNESS ROUTING
UNDER FRAME

Trailer Light Kit Assembly

Ref.	*Part Number*	*Qty.*	*Description*
1	120-4831	1	Grommet
2	32180-030	1	Clip-Tie
3	2412-87	5	Clamp-Cable
4	ST36003-03	2	Bracket-Trailer Lights, Universal
5	125-8659-03	1	Plate-License Holder
6	120-3735	1	Light-Tail, LH
7	120-3734	1	Light-Tail, RH
8	104-6962	2	Reflector-Amber
9	32149-2	13	Nut-Keps
10	115-5103	9	Screw-HHF
11	32180-078	4	Clip-Edge W/Tie, Parallel
12	121-6591	1	Harness-Wire, Trailer Lights
99	3290-379	5	Tie-Cable

Attachments and Accessories

For 68020C MM-858H-S Mortar Mixer Canada

Product Name	Model/Part
31 inch Forged Tow Pole Hitch	68056
31 inch Pintel Tow Pole Hitch	68058
31 inch Stamped Tow Pole Hitch	68060
Grate Kit, 8 cu. ft	68081C



Count on it.