FORM NO. 3319–530

TORO®

MODEL NO. 04110

PARTS CATALOG

GROOMING KIT
FOR GREENSMASTER® 1600

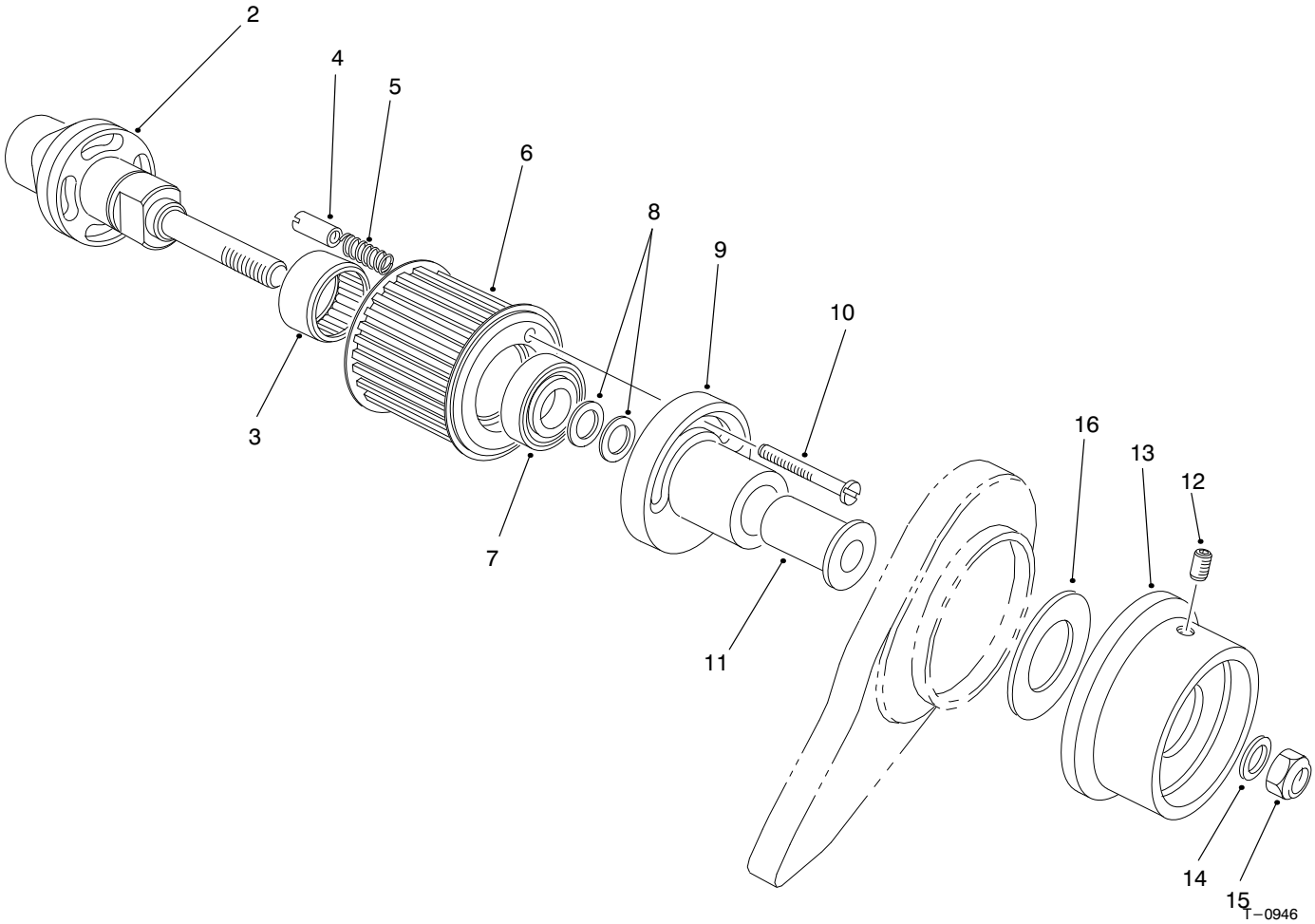

CLUTCH ASSEMBLY

Ref. No.	Part No.	Description	No. Used
2	65–9140	Adapter–Clutch Drive	1
3	252–110	Bearing–Needle	1
4	65–9660	Pin–Clutch	1
5	65–9670	Spring–Compression	1
6	65–9630	Pulley–Driver	1
7	251–327	Bearing–Roller	1
8	3290–480	Washer–Belleville	2
9	65–9640	Disc–Release Clutch	1

Ref. No.	Part No.	Description	No. Used
10	65–9650	Screw–Special	1
11	256–300	Bushing–Flange	1
12	32110–13	Screw–Set	2
13	86–5180	Knob–Clutch	1
14	3256–24	Washer–Flat	1
15	3296–39	Nut–Lock	1
16	86–5170	Washer–Poly	1

© The TORO Company – 1997
All Rights Reserved

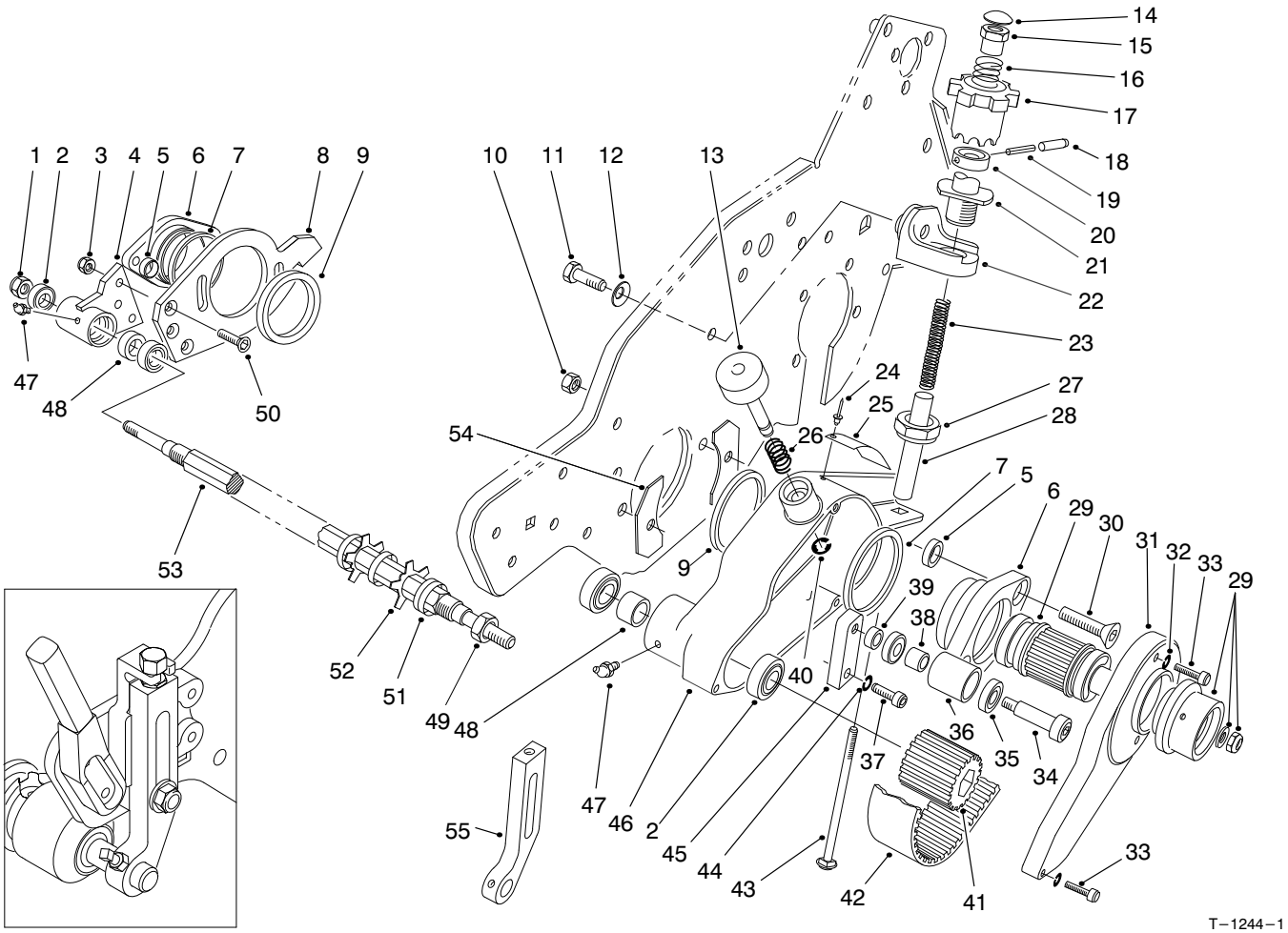

REEL ASSEMBLY

Ref. No.	Part No.	Description	No. Used
1	3296−62	Nut	1
2	251−327	Bearing−Ball	4
3	3296−4	Nut−Lock	3
4	65−9220	Housing−Bearing	1
5	65−9820	Spacer	4
6	65−8160	Adapter	2
7	65−9860	Bearing	2
8	65−8060	Plate−Side	1
9	65−8010	Ring−Adapter	2
10	32152−2	Nut−Lock	4
11	323−34	Screw−HH	2
12	3290−455	Washer−Belleville	2
13	65−9930	Cap	1
14	284−3	Plug	2
15	65−9570	Driver	2
16	65−9580	Spring	2
17	65−9560	Knob−Adjustment (Incl. Ref. #14−16)	2
18	2410−68	Cover−Pin	2
19	32121−15	Pin−Roll	2
20	65−9550	Cap	2
21	65−9830	Ramp	2
22	65−8090	Block−Mounting	2
23	65−9810	Spring	2

Ref. No.	Part No.	Description	No. Used
24	3290−271	Rivet−Pop	2
25	94−6346	Plate−Caution	1
26	65−9940	Spring−Compression	1
27	3296−49	Nut−Lock	2
28	65−8110	Spacer−Spring	2
29		Asm−Clutch	1
30	3289−23	Screw−HSFH	2
31	86−5150	Cover−Belt	1
32	3253−12	Washer−Lock	3
33	3274−13	Screw−HS	3
34	65−9340	Screw−Shoulder	1
35	251−328	Bearing	2
36	65−9320	Pulley−Idler	1
37	3274−10	Screw−HS	1
38	65−9980	Spacer−Pulley Idler	1
39	65−9330	Spacer	1
40	32120−18	Ring−Retaining	1
41	65−9290	Pulley−Driven	1
42	65−9700	Belt	1
43	65−8120	Bolt−Carriage	2
44	3253−4	Washer−Lock	1
45	95−5728	Block−Idler	1
46	65−8070	Housing−Belt Drive	1
47	302−11	Fitting−Grease	2

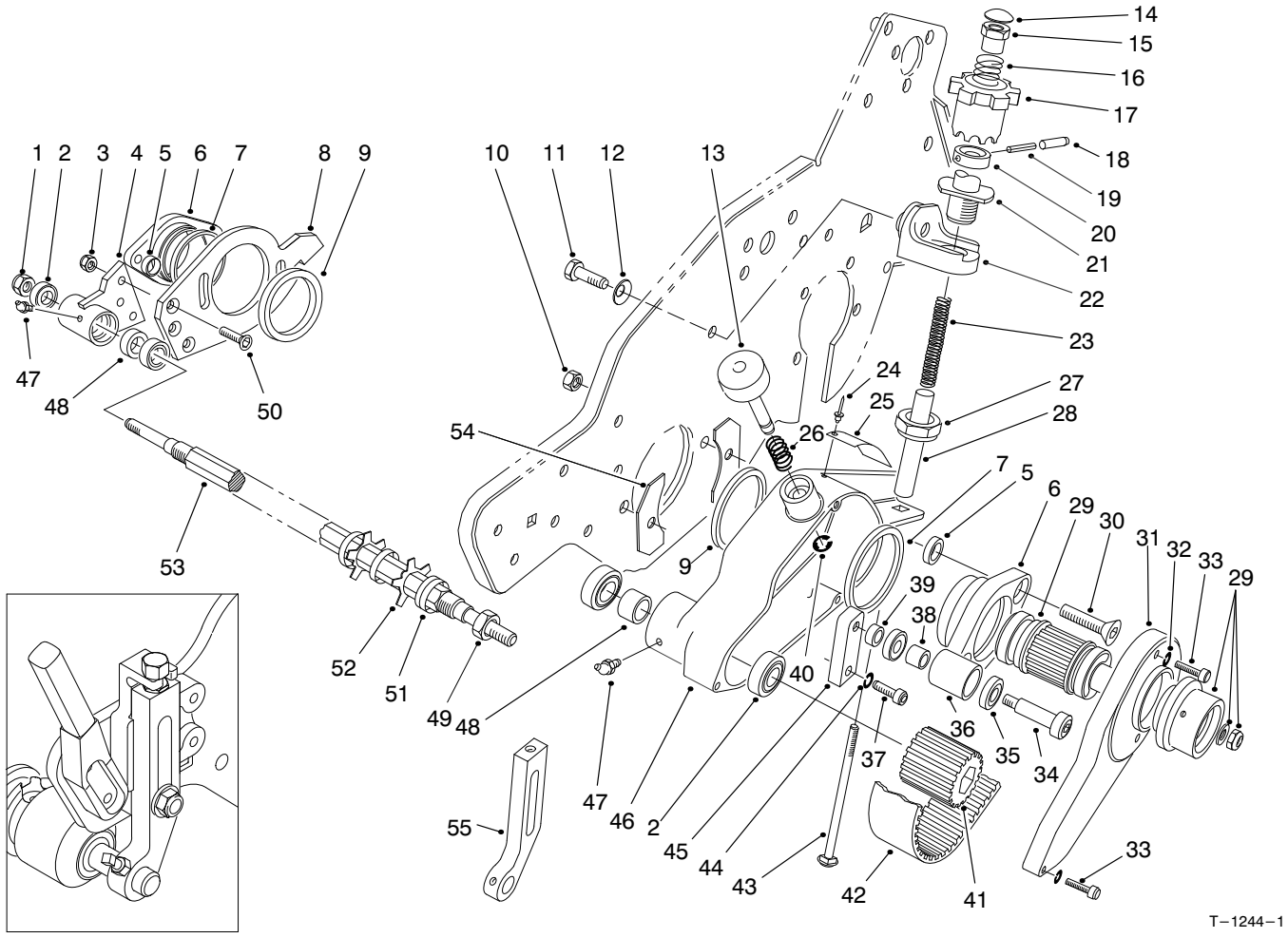

REEL ASSEMBLY

Ref. No.	Part No.	Description	No. Used
48	92−3046	Spacer−Pulley Driven	2
49	3296−60	Nut−Lock	2
50	3289−21	Screw−HSFH.	3
51	70−1350	Spacer	106
52	95−5719	Blade−Groomer	52

Ref. No.	Part No.	Description	No. Used
53	95−5708	Shaft−Groomer	1
54	86−5140	Cover−Slot	2
55	95−5718	Arm−Height of Cut	2
*	95−5730	Asm−Groomer Reel (Incl. Ref. #49, 51−53)	1

*Not Illustrated

PRODUCT CHANGES

In an effort to make improvements available to TORO owners as quickly as possible, minor changes are incorporated into Toro's products from time to time that do not become immediately shown in the Parts Catalog. If such a change has been made in your unit, which is not reflected in your manual, see your TORO Distributor or his Authorized TORO Service Dealer for information and part numbers.

COUNTRIES OTHER THAN THE UNITED STATES OR CANADA

Customers who have purchased TORO products exported from the United States or Canada should contact their Toro Distributor (Dealer) to obtain guarantee policies for your country, province or state. If for any reason you are dissatisfied with your Distributor's service or have difficulty obtaining guarantee information, contact the TORO importer. If all other remedies fail, you may contact us at The Toro Company.

MAINTENANCE RECORD

Date								

Compliance with Radio Interference Regulations Certified.
Certifie Conforme au Reglement sur le Brouillage Radioelectrique.

Litho in U.S.A.