FORM NO. 3319–531

TORO®

MODEL NO. 04110–70001 & UP

INSTALLATION INSTRUCTIONS

GROOMING REEL KIT
GREENSMASTER® 1600

LOOSE PARTS CHART

DESCRIPTION	QTY.	USE
Height–of–Cut Arm	2	Mount front roller to frame
Frame Assembly R.H.	1	Attaches to right frame
Frame Assembly L.H.	1	Attaches to left frame
Bearing Adapter	2	Connects groomer to reel frame
Spacers	4	Connects groomer to reel frame
Slot Cover	2	Mount between groomer housing and left reel bearing housing
Flat Head Screws Locknut	2 4	Fastens bearing adapters
Grooming Reel Assembly	1	52 blades, 1/2” spacing
Driven Pulley Locknut	1 1	Mounts to grooming reel
Clutch Assembly	1	Drive belt
Belt	1	Drives grooming reel
Ring Adapter	2	Connects groomer to reel frame
Operators Manual Parts Catalog Registration Card	2 1 1	Read before operating machine Fill out and send to the Toro Co

SET–UP INSTRUCTIONS

IMPORTANT: Read this Operator’s Manual thoroughly before setting up or operating the groomer. Failure to follow set up or operating instructions in this manual may result in damage to the machine and/or the groomer or the turf.

Note: The terms “left” and “right” used in the text refer to left and right sides of machine as viewed from the operator’s position.

1. Loosen jam nuts and set screws securing each end of front roller to height–of–cut arms (Fig. 1).

2. Remove carriage bolts and locknuts securing height–of–cut arms to adjusting brackets (Fig. 1). Remove height–of–cut arms and roller assembly.

3. Remove height–of–cut adjusting screws, jam nuts and set screws from height–of–cut arms (Fig. 1).

4. Install new height–of–cut arms and roller assembly with height–of–cut adjusting screws, jam nuts and set screws previously removed (Fig. 1A). Height–of–cut arms to be positioned in forward position as shown in figure 1A.

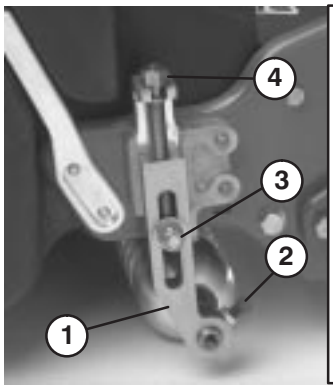

Figure 1

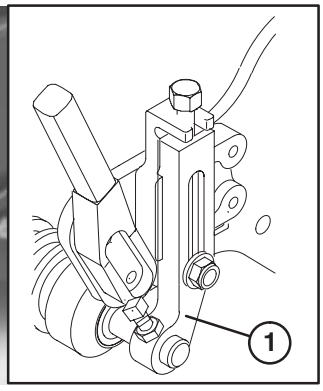

Figure 1A

1. **Height–of–cut arm**
2. **Jam nut and set screw**
3. **Carriage bolt, washer & locknut**
4. **Height–of–cut adjusting screw**

5. Remove (2) capscrews and locknuts securing end cap to left reel bearing housing and side plate of machine. Remove end cap. Retain end cap and mounting screws for use if groomer is ever removed (Fig. 2).

© The TORO Company – 1997

SET–UP INSTRUCTIONS

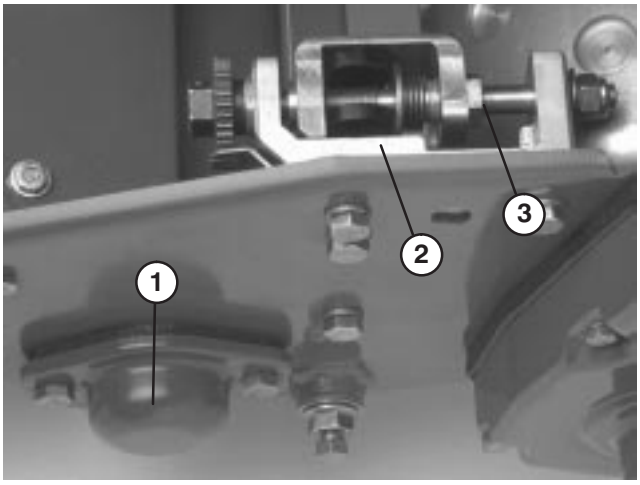

Figure 2
1. End cap
2. Bedbar adjuster frame
3. Spring tension screw

6. Using a 7/8" standard wrench, back out the spring tension screws, on right and left bedbar adjusters, until the thrust washers are no longer tensioned against the bedbar (Fig. 2).

7. Remove (2) capscrews and washers securing left bedbar adjuster frame to side plate (Fig. 2).

8. Install the left grooming reel housing assembly onto the left reel frame using the following procedure:

A. Remove (3) socket head capscrews and lock washers securing cover to groomer housing assembly (Fig. 3).

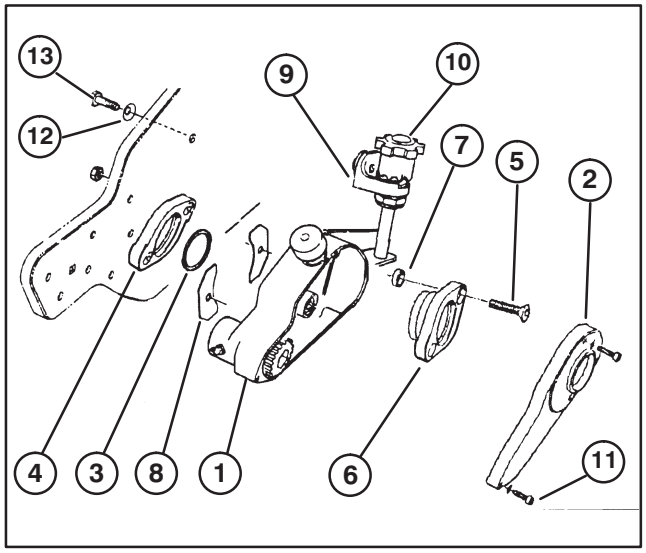

Figure 3
1. Left groomer reel housing assy.
2. Housing cover
3. Adapter ring
4. Reel bearing housing
5. Flat head screw
6. Bearing adapter
7. Spacer
8. Slot covers
9. Mounting block
10. Adjustment knob assy.
11. Socket head capscrew
12. Belleville washer
13. Capscrew

B. Insert a adapter ring into reel bearing housing (Fig. 3 & 4).

C. Insert (2) 3/8–16 x 2" lg. flat head screws through bearing adapter and position spacers on ends of screws (Fig. 3 & 4).

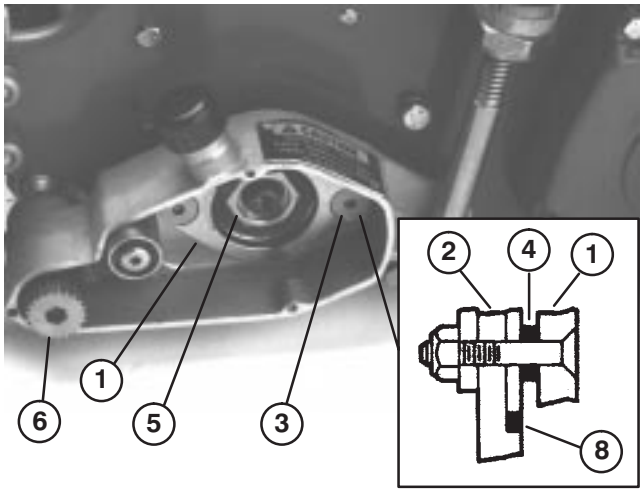

Figure 4
1. Bearing adapter
2. Reel bearing housing
3. Flat head screw
4. Spacer
5. Bearing locknut
6. Driven pulley
7. Groomer adjustment knob
8. Adapter ring

D. Align bearing adapter, spacers and screws with bronze bearing and slots in groomer housing. Slide the bearing adapter through the bronze bearing and the screws through the slots in the groomer housing assembly

E. Insert a slot cover onto each screw, aligning. curved side of slot cover with curve of groomer housing. Slot covers to be positioned curving away from groomer housing.

F. Insert flat head screws into the reel bearing housing. Install locknuts on screws and torque to 23 to 27 ft–lb.

Note: To gain access to locknuts it may be necessary to move or remove the bedbar.

9. Slide one end of the grooming shaft assembly into the bearing support in the groomer housing assembly (Fig. 4). Mount the driven pulley (left hand thread) to the end of the groomer shaft and torque to 29 to 35 ft–lb, using a 3/8" allen socket on a torque wrench (Fig. 4).

10. Mount groomer adjustment knob assembly to left side plate with a 3/8–16 x 5/8" lg. capscrew and Belleville washer. Reinstall left bedbar adjuster frame to side plate with capscrews and washers previously removed (Fig. 3).

11. Install Belt Drive Clutch using the following procedure:

A. Remove the clutch engagement knob from the clutch assembly by loosening the (2) allen head set screws and removing the nut and washer from the clutch adapter shaft (Fig. 5).

SET–UP INSTRUCTIONS

B. Remove bearing locknut from reel shaft (Fig. 4). Secure the reel from turning with a wood block.

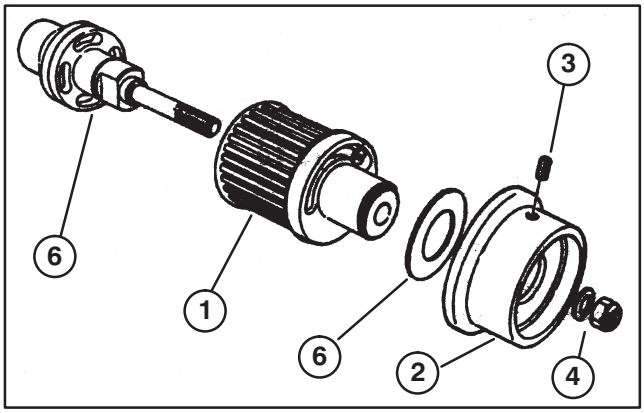

Figure 5

1. Belt drive clutch assy.
2. Engaged/disengagement knob
3. Allen head set screws
4. Nut and washer
5. Clutch adapter shaft
6. Poly washer

C. Remove the adapter from the clutch assembly and screw the adapter onto the left reel shaft extension (Fig. 6). Secure the reel from turning with a wood block and torque the clutch adapter to a minimum of 17 ft–lb.

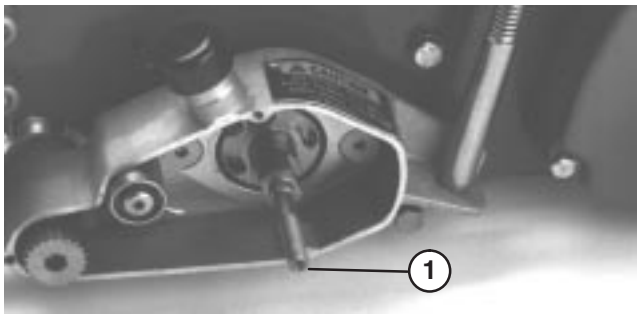

Figure 6

1. Adapter

D. Position the toothed belt over the drive pulley (that was removed from the clutch in step 10). While holding the belt on the drive pulley, simultaneously slide the drive pulley back into place on the clutch adapter and position the belt around the driven pulley and under the backside idler (Fig. 7).

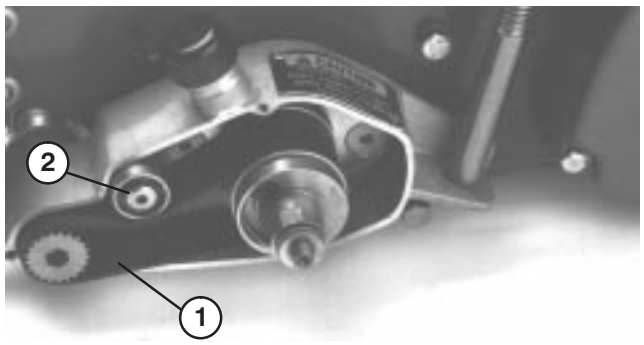

Figure 7

1. Toothed belt
2. Idler

IMPORTANT: If the clutch mechanism has separated due to the removal of the nut and washer, ensure the Belleville washers are properly installed; refer to figure 8.

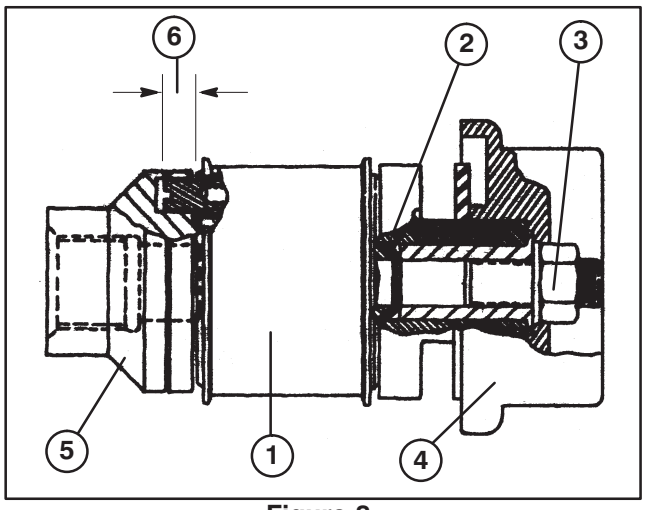

Figure 8

1. Clutch body
2. Belleville washers (2)
3. Nut and washer
4. Engaged/disengage knob
5. Clutch to reel shaft adapter
6. .270 in. ±.010 (with pulley fully extended)

E. Install the washer and nut (that was removed in step 11A) onto the clutch adapter shaft. Secure the reel from turning with a wood block and torque nut to 10 to 14 ft–lbs.

12. Remove (4) capscrews securing reel drive cover to right side plate and remove cover (Fig. 9).

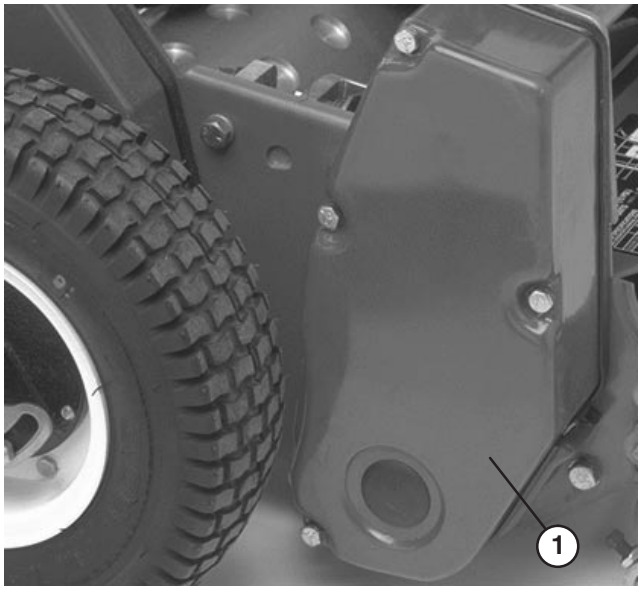

Figure 9

1. Reel drive cover

13. Loosen idler pulley to relieve belt tension and remove reel drive belt from pulleys (Fig. 10).

14. Using a 1/2" drive ratchet and extension, remove drive pulley from reel shaft (Fig. 10). Secure the reel from turning with a wood block.

SET–UP INSTRUCTIONS

15. Remove (2) flat head machine screws and nuts securing groomer arm cover to bearing housing and side plate (Fig. 10). Remove groomer arm cover and retain fasteners.

16. Remove (2) capscrews and washers securing right bedbar adjuster frame to side plate.

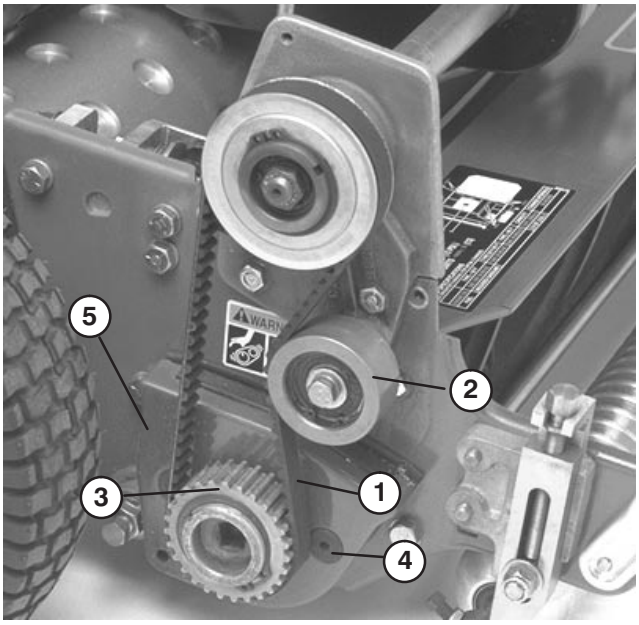

Figure 10

1. Traction drive belt
2. Idler pulley
3. Drive pulley
4. Flat head machine screw
5. Groomer arm cover

17. Install the right hand groomer plate assembly onto the right reel bearing housing using the following procedure:

A. Slide the groomer plate assembly over the end of the groomer shaft (Fig. 11).

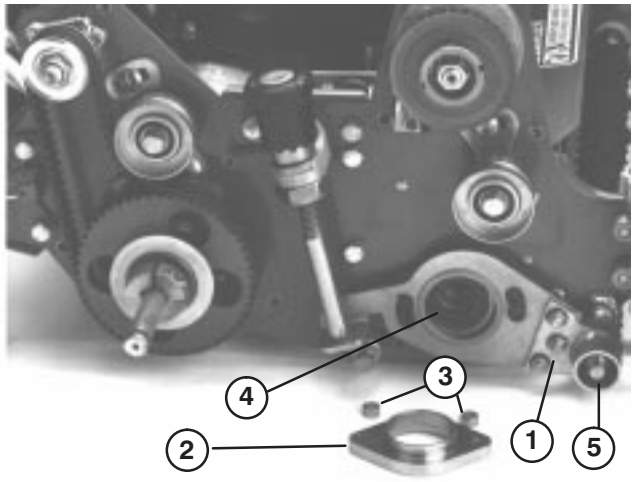

Figure 11

1. Groomer plate assembly
2. Bearing adapter
3. Spacer
4. Adapter ring
5. Groomer shaft

B. Insert a adapter ring into reel bearing housing. Insert the two 3/8–16 x 2" lg. flat head screws through the groomer arm cover and bearing adapter. Put a spacer over each screw before positioning the adapter into the reel bearing housing. Slide the adapter through the bronze bearing in the groomer plate assembly and into the reel bearing housing. Install locknuts on flat head screws and torque to 23 to 27 ft–lb (Fig. 11).

C. Secure right end of groomer shaft to groomer plate assembly with a 1/2–20 locknut (Left handthread) Torque to 29 to 35 ft–lb (Fig. 11)

18. Mount groomer adjustment knob assembly to right side plate with a 3/8–16 x 5/8" lg. capscrew and Belleville washer. Reinstall right bedbar adjuster frame to side plate with capscrews and washers previously removed.

19. Check the tension on the drive belt by depressing it at the midpoint between the drive pulley and the driven pulley (Fig. 7). A force of 5 to 10 lbs. should be required to depress the midpoint of the belt 1/4 inch. To adjust tension, loosen the backside idler pulley pivot allen head bolt, pivot the idler to achieve the proper tension, and torque the allen head bolt to 7 to 10 ft–lbs.

20. Reinstall the clutch housing cover to clutch housing, using the (3) socket head screws and lock–washers previously removed (Fig. 12).

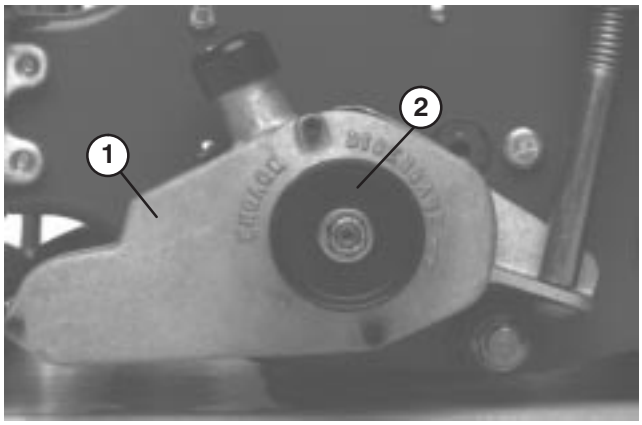

Figure 12

1. Clutch housing cover
2. Clutch engagement knob

21. Reinstall the clutch engagement knob to the clutch assembly with two allen head set screws, previously removed (Fig. 12).

22. Using a 1/2" drive ratchet and extension, reinstall drive pulley and belt to reel shaft (Fig. 13). Secure the reel from turning with a wood block. Tighten pulley to 40 to 60 ft–lbs of torque.

23. Reinstall reel drive belt. Check tension by depressing belt at mid span of pulleys with 4 ±1 lbs. of force. Belt should deflect 1/4 in.

SET−UP INSTRUCTIONS

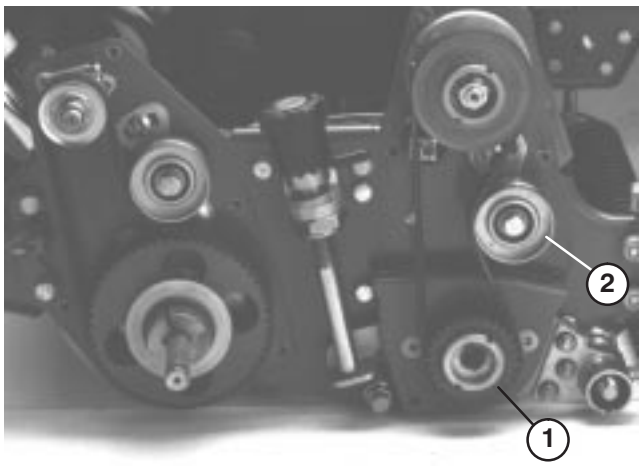

Figure 13
1. **Drive pulley**
2. **Idler pulley**

24. Reinstall reel drive cover to sideplate with (4) capscrews previously removed.

25. Check the assembly. Rotate both quick up levers to raise the grooming reel into the transport position (Fig. 14). Hold the clutch snubber down and rotate the clutch knob clockwise to disengage the clutch (Fig. 14). Correct any problems and recheck assembly.

26. Using a hand pump grease gun, lubricate the (2) grooming reel shaft bearings (one on each end). Pump only 2−3 pumps maximum to avoid permanently damaging the grease seals.

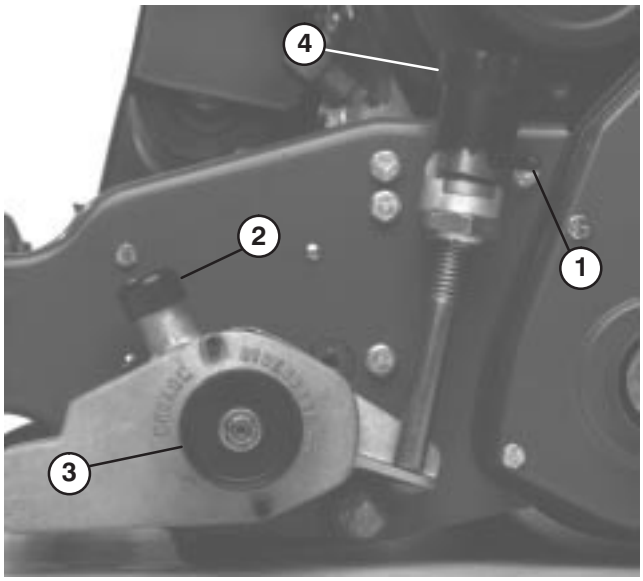

Figure 14
1. **Quick up lever**
2. **Clutch snubber**
3. **Clutch knob**
4. **Micro adjustment knob**

OPERATING INSTRUCTIONS

INTRODUCTION

Grooming is performed above the soil level. Grooming promotes vertical growth of the grass by cutting runners (stolons), removing thatch and encouraging denser growth and deeper rooting. This can, in effect, yield a more even grass with less “grain” for faster and truer action of the golf ball.

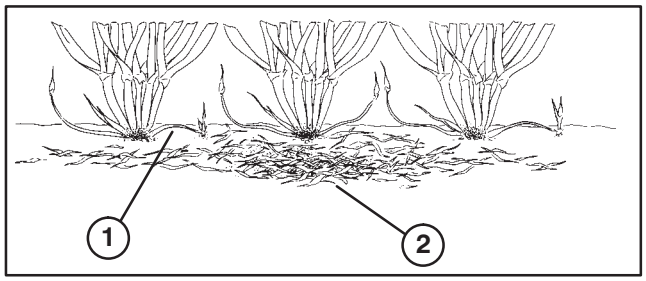

Figure 15
1. **Grass runners**
2. **Thatch**

Grooming is similar to verti−cutting in its runner cutting action. Grooming blades however, should never penetrate the soil like verti−cutting or dethatching. Groomer blades are spaced closer together and are used more often than verti−cutters so that they are more effective in cutting runners and removing thatch. Verti−cutters are used primarily for greens renovation while groomers are used for ongoing greens upkeep.

It is difficult to make precise recommendations on use of grooming reels because so many variables affect the performance of grooming including:

A. The time of the year (i.e., the growing season) and weather pattern.

B. The general condition of each green.

C. The frequency of grooming/cutting−both how many cutting per week and how many passes per cutting.

D. The height of cut setting on the main reel.

E. The height/depth setting on the grooming reel.

F. How long the grooming reel has been in use on this green.

G. Type of grass on the green.

H. The overall greens management program (i.e. irrigation, fertilizing, spraying, coring, over seeding, etc.).

I. Traffic

J. Stress periods (i.e., high temperatures, high humidity, unusually high traffic).

These factors can vary from golf course to golf course and from green to green. It is important, therefore, to inspect the greens frequently and vary the grooming practice in accordance with the need.

The groomer is set at the factory with 1/2” blade spacing. By removing spacers and adding blades or adding spacers and removing blades the groomer can be changed to 1/4” or 3/4” spacing.

Grooming with 1/4” blade spacing is recommended for fast growth periods (spring through early summer). Grooming with 3/4” blade spacing is recommended for slower growth periods (late summer through fall and winter). During high stress periods it may be desirable to not use the grooming reel.

Note: Grooming with 1/4” blade spacing will tend to remove more grass blades and thatch and cut more runners than grooming with 1/2” or 3/4” blade spacing. If grooming with 1/4” blade spacing, one or two groomings per week will probably be sufficient except during maximum growth periods.

Note: The practice of changing the direction of cut each time the green is cut should be continued when a groomer is used. This rotation will enhance the effects of the grooming.

TEST GROOMER PERFORMANCE

IMPORTANT: **Improper or over aggressive use of the grooming reel (i.e., too deep or too frequent grooming) may cause unnecessary stress on the turf leading to severe greens damage. Use the groomer cautiously.**

It is important to determine the performance of the groomer before putting it into regular use on greens. Toro strongly suggests that a formal test procedure be used. The following is a practical way of determining the proper height/depth setting:

1. Set the cutting reel to the height of cut that would normally be used without the grooming reel. Use a Wiehle roller and scraper for the front roller

2. Set groomer reel 1/32” above the roller level; refer to Height/Depth of Groomer Setting.

3. Make a pass over the test green, then lower groomer flush with roller level and make another pass over test green.

4. Compare the results. The first groomed area when the setting was 1/32” above roller level will have removed significantly less grass and thatch than the second setting.

Check the test green 2 or 3 days after the first grooming for general condition/damage. If the groomed areas are turning yellow/brown, and the non−groomed areas are green, then the grooming was too aggressive.

Note: The color of the grass will change when the grooming reel is used. This can be observed with the first grooming and will continue over time. Experience will allow the greens superintendent to judge by color of the turf (along with close examination) if the current grooming practice is appropriate for the particular green. Because the grooming reel stands up more grass and removes thatch, the quality of the cut will not be the same as without the groomer. This effect is most noticeable the first few times a groomer is used on a green.

Note: On multiple passes (i.e., double and triple cutting), the groomer will continue to penetrate deeper on each successive pass. Multiple passes are not recommended.

5. After testing the performance of the groomer on a test green and satisfactory results are obtained, grooming on the playing greens can begin. It is important to realize, however, that each green may respond differently to grooming. In addition, growing conditions are constantly changing. Inspect the groomed greens frequently and make adjustments to the grooming procedure as often as necessary.

HEIGHT/DEPTH OF GROOMER SETTING

The groomer blade height/depth of grooming can be set using the following procedure:

1. Make sure the rollers are clean and main reel is set to desired height of cut. Position machine on a flat, level work surface.

2. Hold the clutch snubber down and disengage the clutch by turning the clutch knob clockwise (Fig. 16). Use the quick up levers (both sides) to lower the grooming reel into the grooming position (Fig. 16).

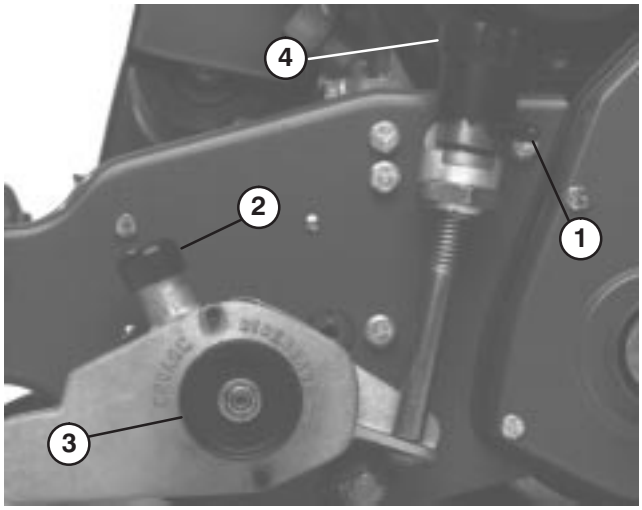

Figure 16

1. **Quick up lever**
2. **Clutch snubber**
3. **Clutch knob**
4. **Micro adjustment knob**

3. On one end of groomer shaft, measure the distance from the lowest tip of a groomer blade to work surface (Fig. 17). Lift and turn micro adjustment knob (Fig. 16) to raise or lower blade tip. Each notch on the micro adjustment knob is approximately equal to .007 inch of groomer depth.

4. Repeat procedure on opposite end of groomer, then recheck setting on first side.

5. Put the grooming reel into the transport position.



Figure 17

CLUTCH ENGAGE/ DISENGAGE

The grooming reel should be disengaged at all times except during grooming. To operate the clutch, depress the clutch snubber and engage the clutch by turning the clutch knob counter−clockwise−turn the clutch knob clockwise to disengage the clutch.

IMPORTANT: When engaging or disengaging the clutch, be sure to turn the knob all the way (it will come to a firm stop). Failure to do so could cause damage to the clutch.

TRANSPORT MODE

IMPORTANT: When transporting machine be sure to disengage the groomer clutch and raise the grooming reel into its transport (raised) position. To raise the grooming reel, rotate the right and left quick up levers so they face to the rear (Fig. 17). To lower the grooming reel, turn the quick up levers forward and engage the clutch.

MAINTENANCE

CLEANING

Hose off the grooming reel after use. Do not direct the water stream directly at the groomer bearing seals. Do not permit the grooming reel to stand in water so that the components rust.

LUBRICATION

Lubricate the (2) grooming reel shaft bearings with a hand pump grease gun (2 or 3 pumps maximum). Do not over grease as excess may cause seal failure

Note: When lubricating the main reel bearings, do not over grease because excess grease can work its way into the grooming reel clutch and drive belt mechanism.

BLADE INSPECTION

Inspect grooming reel blades frequently for damage and wear. Bent blades may be straightened with a pliers. Worn blades can be replaced or the grooming reel shaft reversed to put the sharpest edge of the blade forward. When inspecting the blades, check to see that the right and left blade shaft end nuts are tight.

Note: Because the groomer may introduce more debris (i.e., dirt and sand) into the cutting unit than what the reel would normally be exposed to, the bedknife and main reel should be checked for wear more frequently. This is especially important in sandy soil and/or when the groomer is set for penetration.

GROOMING REEL REPLACEMENT

The grooming reel can be removed to replace individual blades, the entire shaft or to reverse the shaft so that the sharpest edge of the blades are forward. Remove an replace the grooming reel shaft using the following procedure:

1. Remove the left side grooming reel housing cover (Fig. 3). Remove the drive belt by loosening the idler pulley (Fig. 11).

2. Remove the grooming reel drive shaft pulley (left hand thread) using an allen wrench (Fig. 4). Then remove the locknut securing the grooming reel to the right bearing housing bracket.

3. Remove the right side grooming reel housing bearing bracket by unfastening the three bolts and nuts (Fig. 13). Remove the grooming reel shaft.

4. Assemble the shaft in reverse order. Using the location marks on each blade as a guide, assemble each blade so the location mark is offset one flat on the hexagonal shaft.

Note: The location marks on each blade are offset so they can be used to achieve proper grooming reel setup. Stack the blades and match the location marks before installing them on the grooming reel shaft.

Torque the drive pulley and locknut (left hand thread) to 29 to 35 ft−lbs. Check drive belt tension. There should be 1/4 inch deflection when a force of 5−10 lb is applied midway between the drive and driven pulleys (Fig. 18). To adjust belt tension, loosen the backside idler pivot screw and pivot the idler to achieve proper tension. Torque the pivot screw to 7−10 ft−lb.

5. Using a hand pump grease gun, lubricate the (2) grooming reel shaft bearings. Pump only 2−3 pumps maximum to avoid permanently damaging the grease seals.

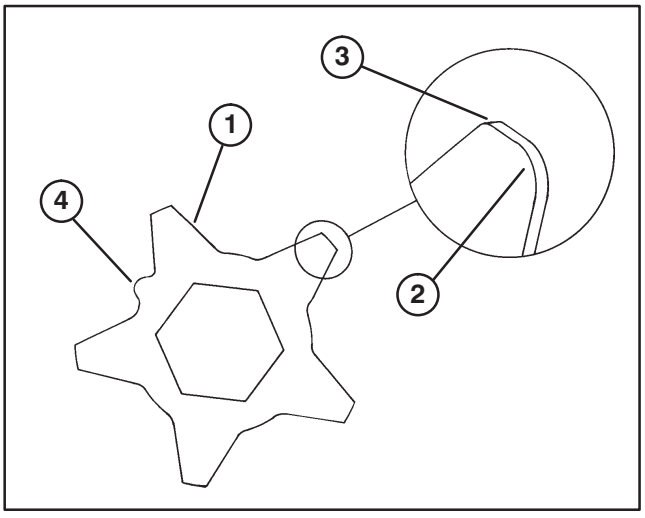

Figure 18

6. Check grooming reel height/depth setting.