Form No. 3377-543 Rev A

TORO®

Count on it.

Parts Catalog

RP-700 Reversible Plate Compactor

Model No. 68072—Serial No. 313000001 and Up

Register at www.Toro.com.
Original Instructions (EN)

3377-543 A

Ordering Replacement Parts

To order replacement parts, please supply the part number, the quantity, and the description of each part desired.

Understanding Reference Numbers

Each identified part in an illustration has a reference number. The reference number for a part also appears in the parts list, along with other information about the part.

This catalog uses two special reference number formats, one to indicate parts in a service assembly and another to indicate the quantity of a given part in an illustration.

Service Assembly Reference Numbers

Parts in service assemblies have reference numbers in the form a:b. The a represents the reference number of the entire service assembly and the b represents a sequential number unique to each part within the service assembly.

For example, a wheel assembly might be identified by reference number 6, the tire by 6:1, the valve by 6:2, and the wheel by 6:3. When you order the assembly identified by reference number 6, you receive all parts identified by reference numbers 6:1,6:2, and 6:3. However, you may also order any part individually. Reference numbers of this type appear in illustration and in parts lists.

Reference Numbers Indicating Quantity

In an illustration, if a reference number indicates more than one part, the reference number has the form nX y. The n represents the quantity of the part, the X is the multiplication symbol, and the y represents the reference number.

For example, in an illustration, the reference number 2X 37 means that two of the parts identified by reference number 37 are indicated.

List of Abbreviations

AR: as required

ASM: assembly

BBC: blade brake control

BHTF: button head thread forming

CARR: carriage

CCW: counter clockwise

CW: clockwise

DEG: degrees

DPA: Dual Point Adjustment

ECM: electronic control module

EXT: external

FH: flat head

GA: gauge

HD: heavy-duty

HF: hex flange

HH: hex head

HHF: hex head flange

HHFTF: hex head flange thread forming

HJ: hex jam

HLH: hex lag head

HOC: height-of-cut

HSBH: hex socket button head

HSFH: hex socket flat head

HSH: hex socket head

HWH: hex washer head

HWHTF: hex washer head thread forming

HYD: hydraulic

LH: left hand

LP: Liquefied Petroleum Gas

LPG: Liquefied Petroleum Gas

NI: nylon insert

NPTF: national pipe thread fine

PFH: phillips flat head

PPH: phillips pan head

PPHTF: phillips pan head thread forming

PRH: phillips round head

PTH: phillips truss head

PTO: power-take-off

RH: right hand

ROPS: roll-over protection system

RRB: rear roller brush

SFH: slotted fillister head

SHH: slotted hex head

SHWH: slotted hex washer head

SPH: slotted pan head

SQH: square head

SRH: slotted round head

STD: standard

TAP: self tapping

TTH: torx truss head

Contents

Bed Plate Assembly 4
Engine Assembly 6
Engine Plate Assembly 7
Decals 8
Frame Assembly 10
Control Arm Assembly 11
Control and Handle Assembly 12
Attachments and Accessories 13

© 2013—The Toro® Company
8111 Lyndale Avenue South
Bloomington, MN 55420

Contact us at www.Toro.com.
Printed in the USA.
All Rights Reserved

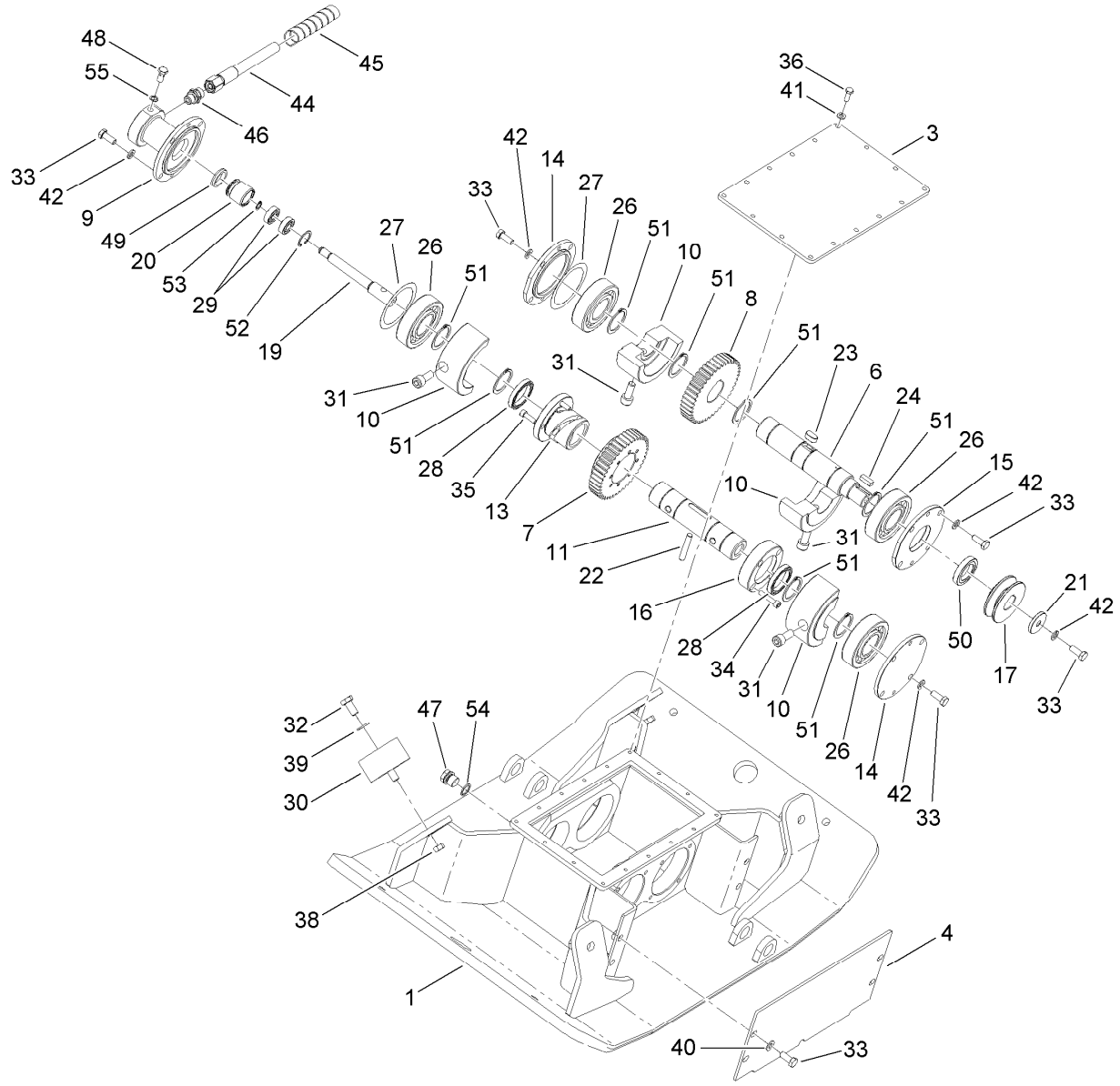

Bed Plate Assembly

Ref.	Part Number	Qty.	Description
1	127-5200	1	Plate-Base
3	127-5201	1	Cover-Top
4	127-5202	1	Cover-Side
6	127-5203	1	Shaft-Input
7	127-5204	1	Wheel-Tooth Ii
8	127-5205	1	Wheel-Tooth I
9	127-5206	1	Flange-Mounting
10	127-5207	2	Weight-Eccentric
11	127-5208	1	Shaft-Eccentric, Driven
13	127-5209	1	Bushing
14	127-5210	2	Cover-Bearing
15	127-5211	1	Cover-Bearing
16	127-5212	1	Ring-Clamp
17	127-5163	1	Pulley
19	127-5213	1	Rod-Shift
20	127-5214	1	Piston-Shift
21	127-5215	1	Washer
22	127-5216	1	Pin-Shifting
23	127-5217	1	Key
24	127-5218	1	Key
26	127-5219	4	Bearing-Ball

Ref.	Part Number	Qty.	Description
27	127-5220	2	Washer-Distance
28	127-5174	2	Bearing
29	127-5173	2	Bearing
30	127-5074	4	Mount-Rubber
31	127-5180	4	Bolt
32	33115-020	4	Screw-HH
33	127-5184	21	Bolt
34	127-5179	4	Bolt
35	127-5098	4	Bolt
36	127-5221	16	Bolt
38	33025-00	4	Nut-Lock, NI
39	127-5084	4	Washer
40	127-5104	4	Washer
41	127-5105	16	Washer
42	127-5222	17	Washer-Lock
44	127-5223	1	Hose-HYD
45	127-5075	1	Cover-Hose
46	127-5224	1	Socket
47	127-5078	1	Plug
48	127-5225	1	Bolt-Flow
49	127-5142	1	Packing

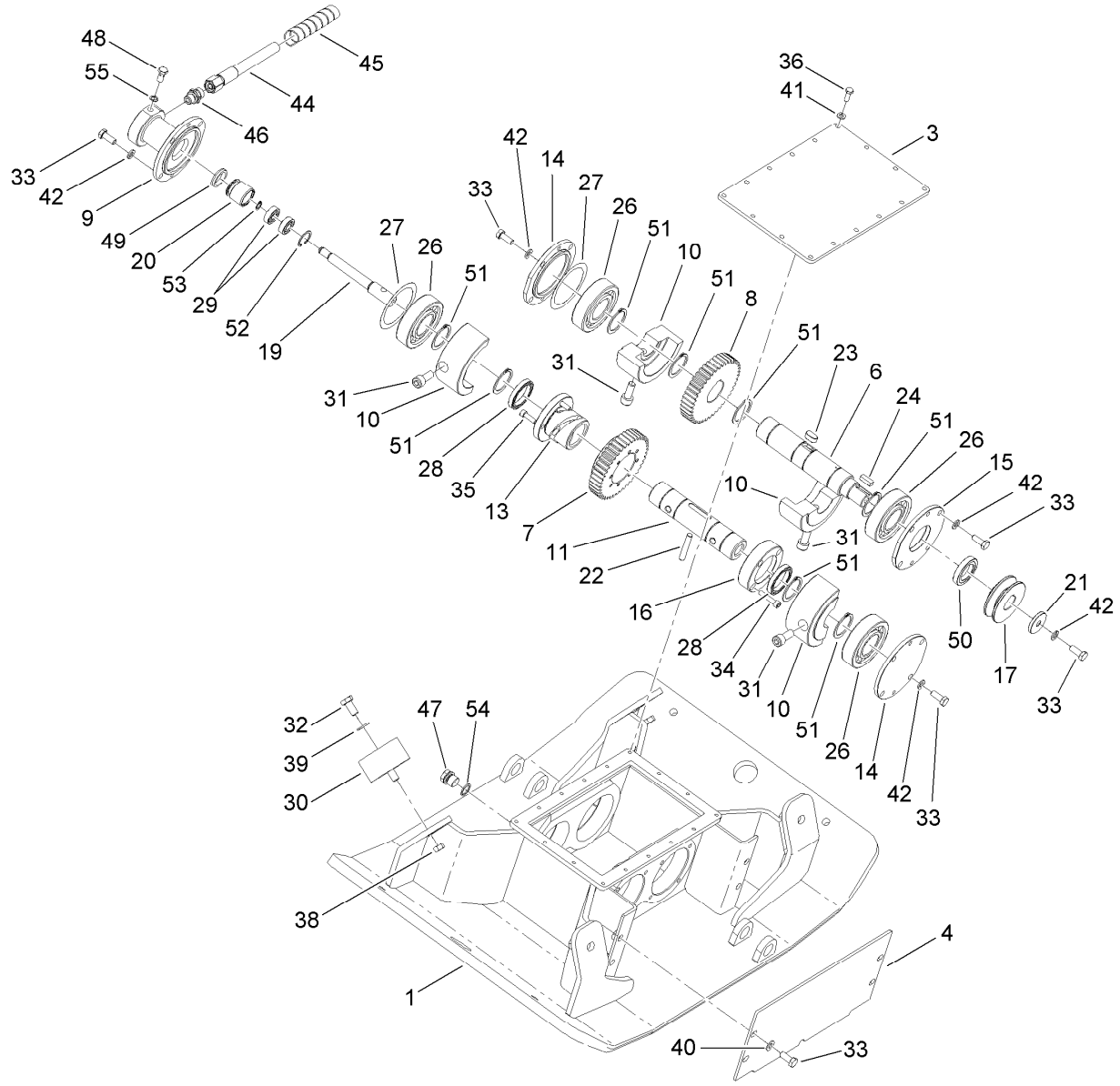

Bed Plate Assembly (continued)

Ref.	Part Number	Qty.	Description
50	127-5178	1	Ring-Packing
51	127-5175	8	Ring-Locking
52	127-5177	1	Ring-Locking
53	127-5226	1	Ring-Packing
54	127-5087	1	Ring
55	127-5227	1	Ring-Copper

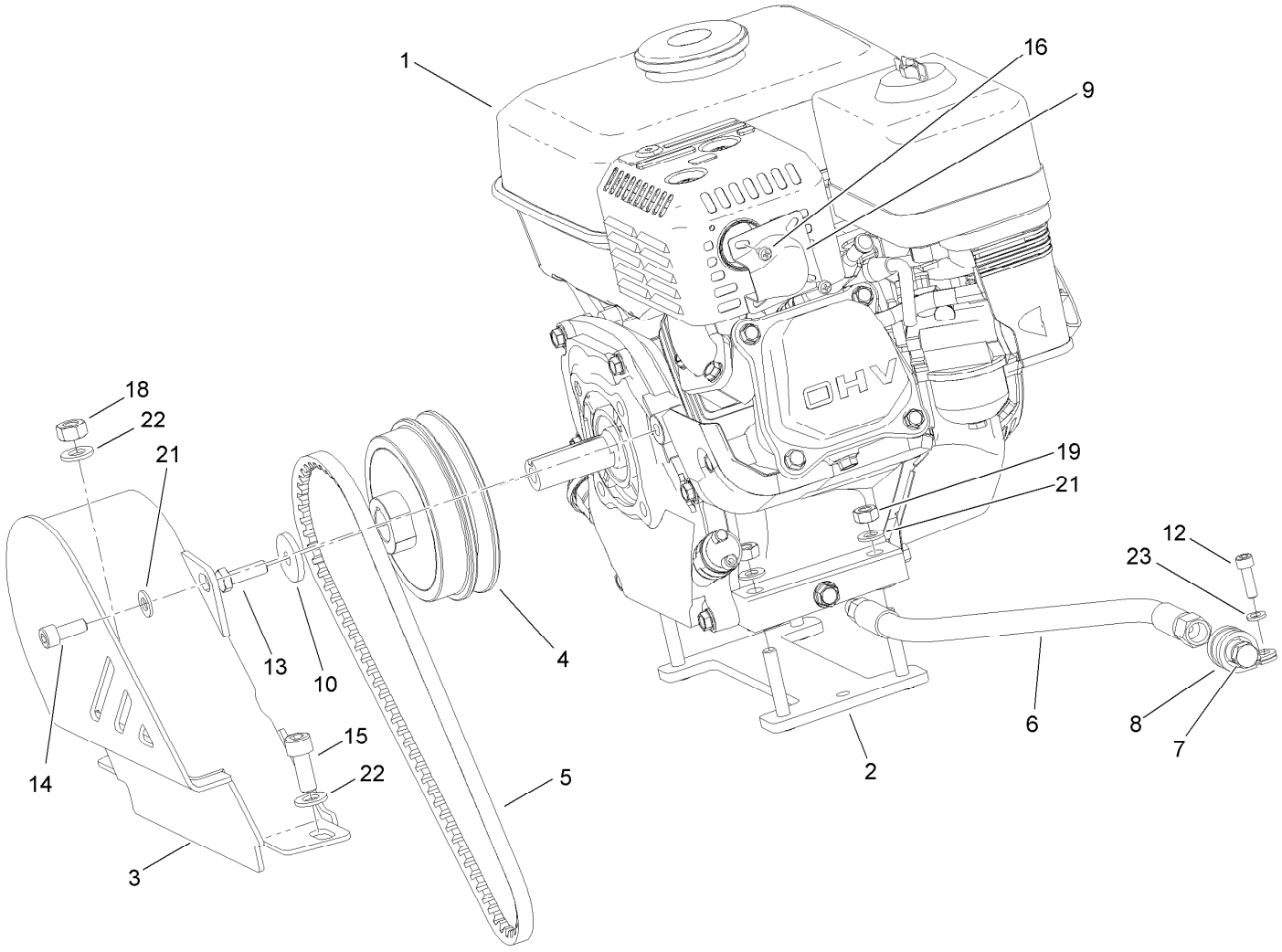

Engine Assembly

Ref.	Part Number	Qty.	Description
1	127-5228	1	Engine-Honda
2	127-5089	1	Mount-Engine
3	127-5229	1	Guard-Belt
4	127-5091	1	Pulley-Drive
5	127-5230	1	Belt-V
6	127-5231	1	Hose-Drain, Oil
7	127-5094	1	Plug-Oil
8	127-5095	1	Clip-Hose
9	127-5096	1	Deflector-Exhaust
10	127-5097	1	Washer

Ref.	Part Number	Qty.	Description
12	127-5098	1	Bolt
13	127-5099	1	Bolt
14	127-5100	1	Bolt
15	127-5101	1	Bolt
16	127-5102	2	Bolt
18	33025-00	1	Nut-Lock, NI
19	127-5103	4	Nut
21	127-5104	5	Washer
22	127-5084	2	Washer
23	127-5105	1	Washer

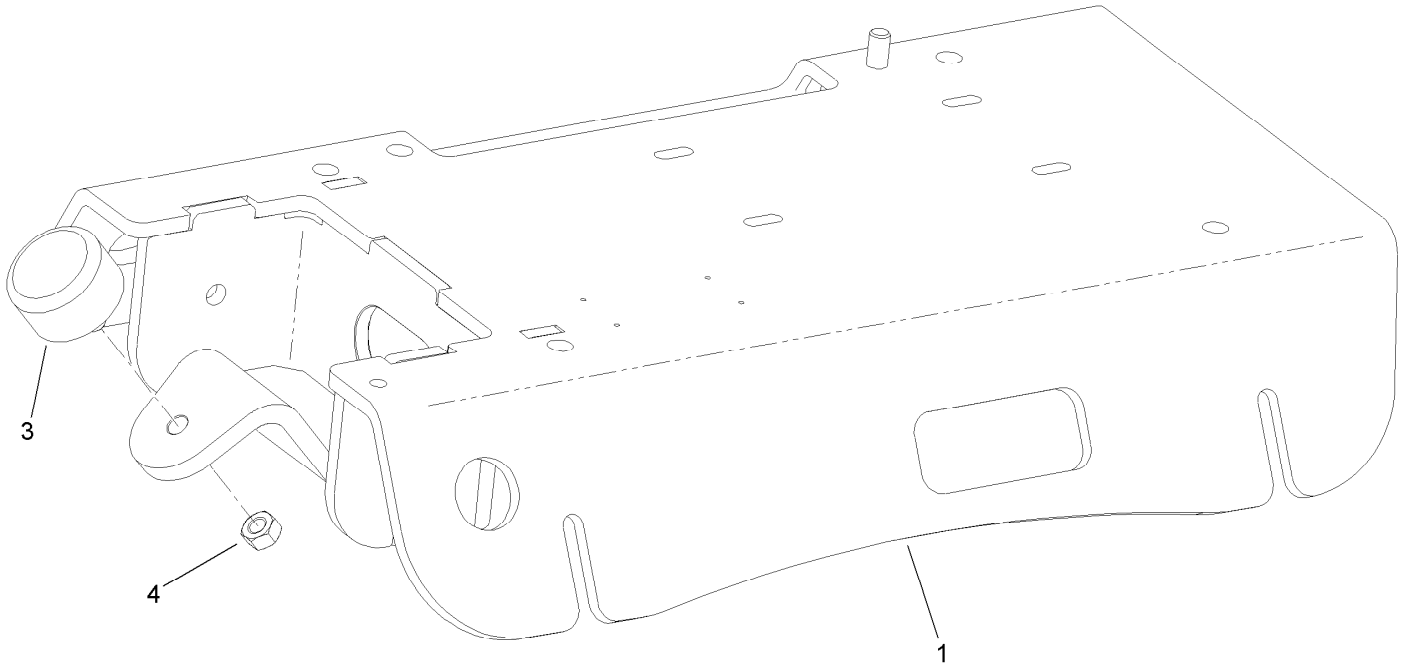

Engine Plate Assembly

Ref.	*Part Number*	*Qty.*	*Description*
1	127-5232	1	Plate-Engine
3	127-5107	1	Bumper-Rubber
4	33025-00	1	Nut-Lock, NI

Decals

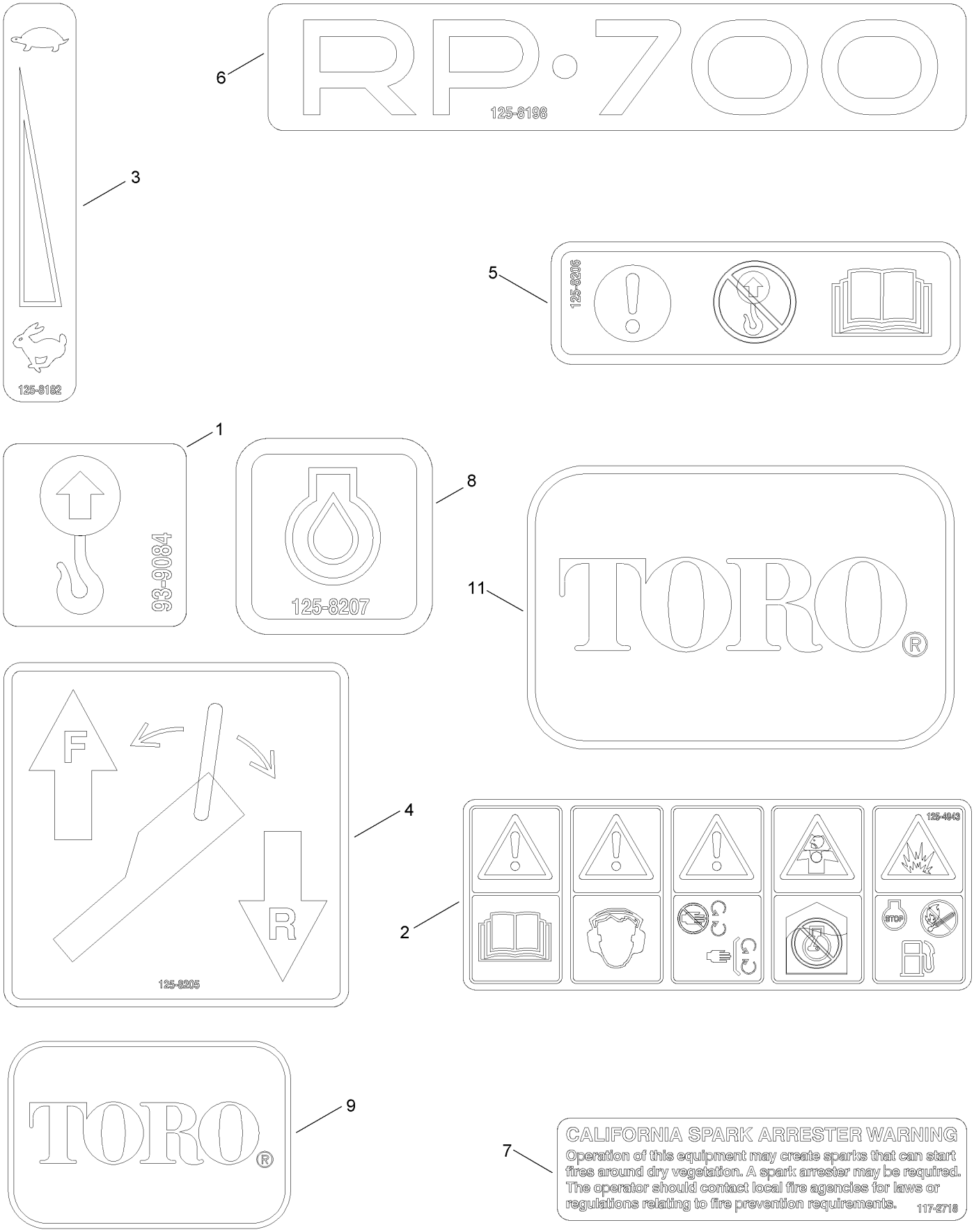
6
RP·700
125-8198
3
125-8162
5
125-8206
1
93-9084
8
125-8207
11
TORO®
4
F
R
125-8205
2
125-4943
9
TORO®
7
CALIFORNIA SPARK ARRESTER WARNING
Operation of this equipment may create sparks that can start fires around dry vegetation. A spark arrester may be required. The operator should contact local fire agencies for laws or regulations relating to fire prevention requirements.
117-2718

Decals (continued)

Ref.	Part Number	Qty.	Description
1	93-9084	1	Decal-Point, Lift
2	125-4943	1	Decal-Warning, Plate
3	125-8182	1	Decal-Throttle
4	125-8205	1	Decal-Operation
5	125-8206	1	Decal-Caution
6	125-8198	2	Decal (Rp-700)
7	117-2718	1	Decal-Arrester, Spark
8	125-8207	1	Decal-Engine Oil
9	70-2200	2	Decal
11	104-3989	1	Decal

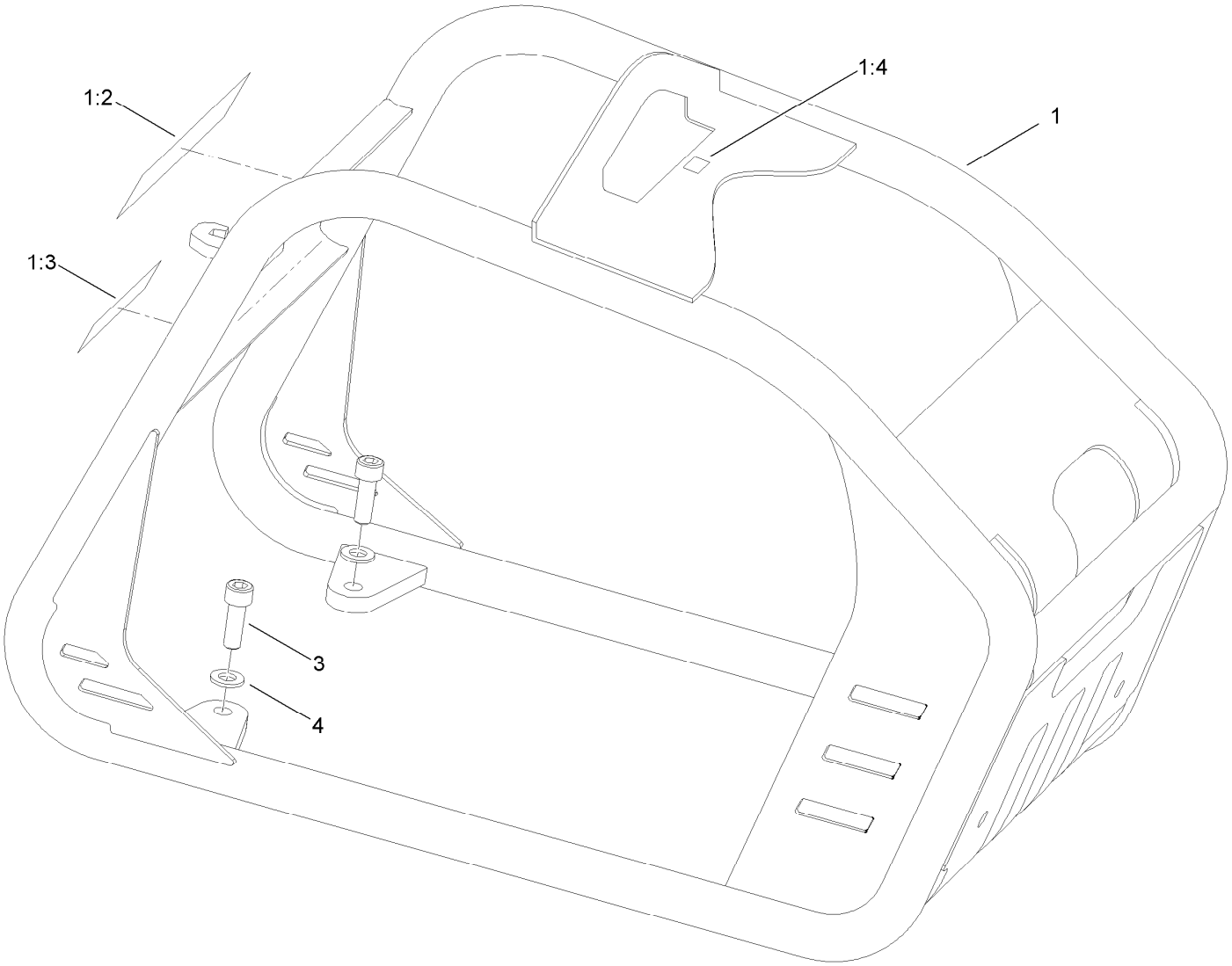

Frame Assembly

Ref.	*Part Number*	*Qty.*	*Description*
1	127-5057	1	Engine Cage ASM
1:2	125-4943	1	Decal-Warning, Plate
1:3	117-2718	1	Decal-Arrester, Spark
1:4	93-9084	1	Decal-Point, Lift
3	127-5109	4	Bolt
4	127-5084	4	Washer

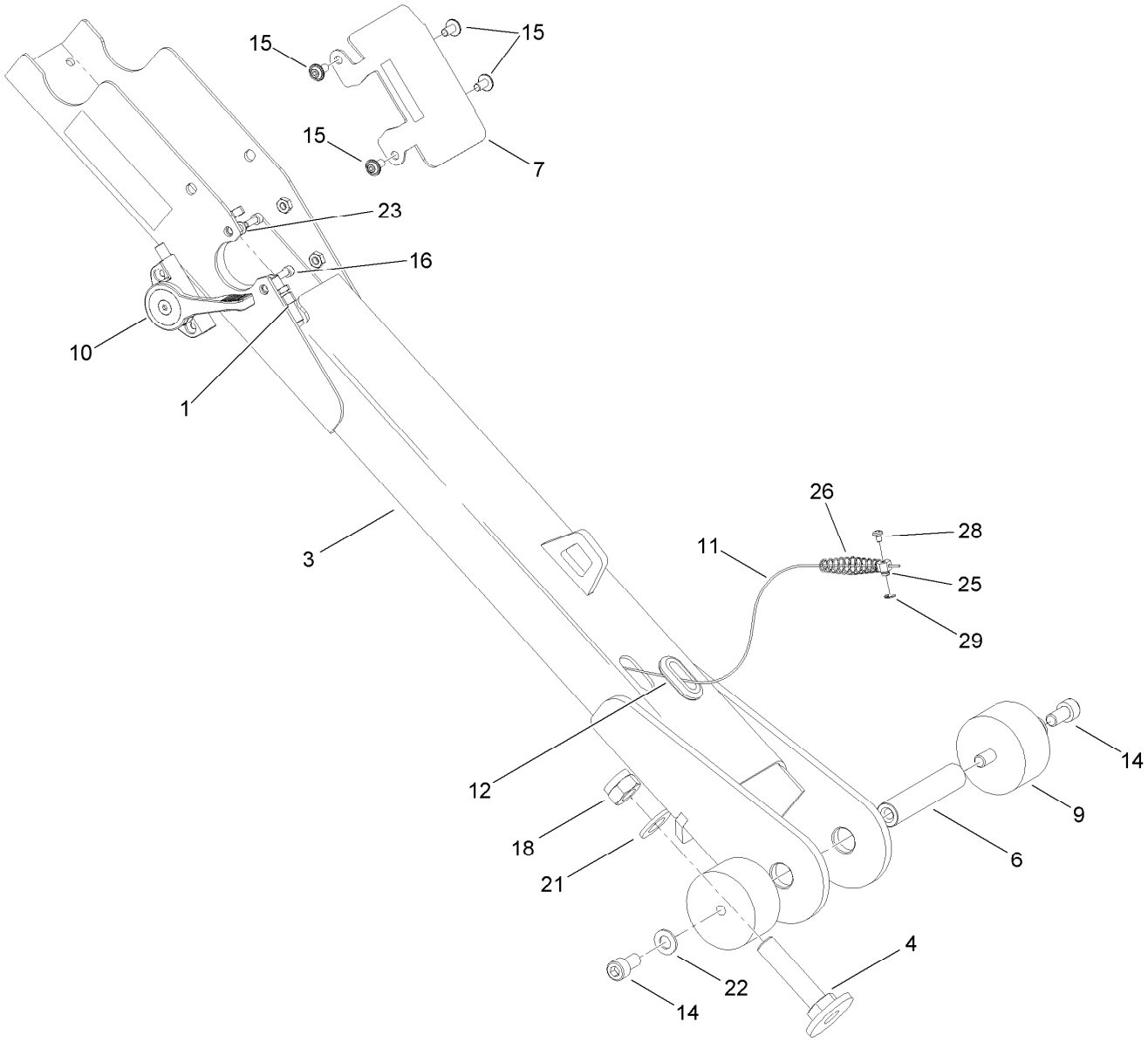

Control Arm Assembly

Ref.	Part Number	Qty.	Description
1	127-5110	1	Guide-Cable
3	127-5111	1	Control Arm ASM
4	127-5112	1	Screw-Stop
6	127-5113	1	Bar-Pin
7	127-5114	1	Plate-Cover
9	127-5115	2	Mount-Rubber
10	127-5116	1	Lever-Throttle
11	127-5117	1	Cable-Throttle
12	127-5118	1	Grommet
14	127-5101	2	Bolt

Ref.	Part Number	Qty.	Description
15	127-5119	4	Bolt
16	127-5120	2	Bolt
18	127-5121	1	Nut
21	127-5123	1	Washer
22	127-5084	2	Washer
23	127-5124	2	Washer
25	127-5125	1	Nut-Wire
26	127-5126	1	Spring
28	127-5102	1	Bolt
29	127-5127	1	Bar-Ring

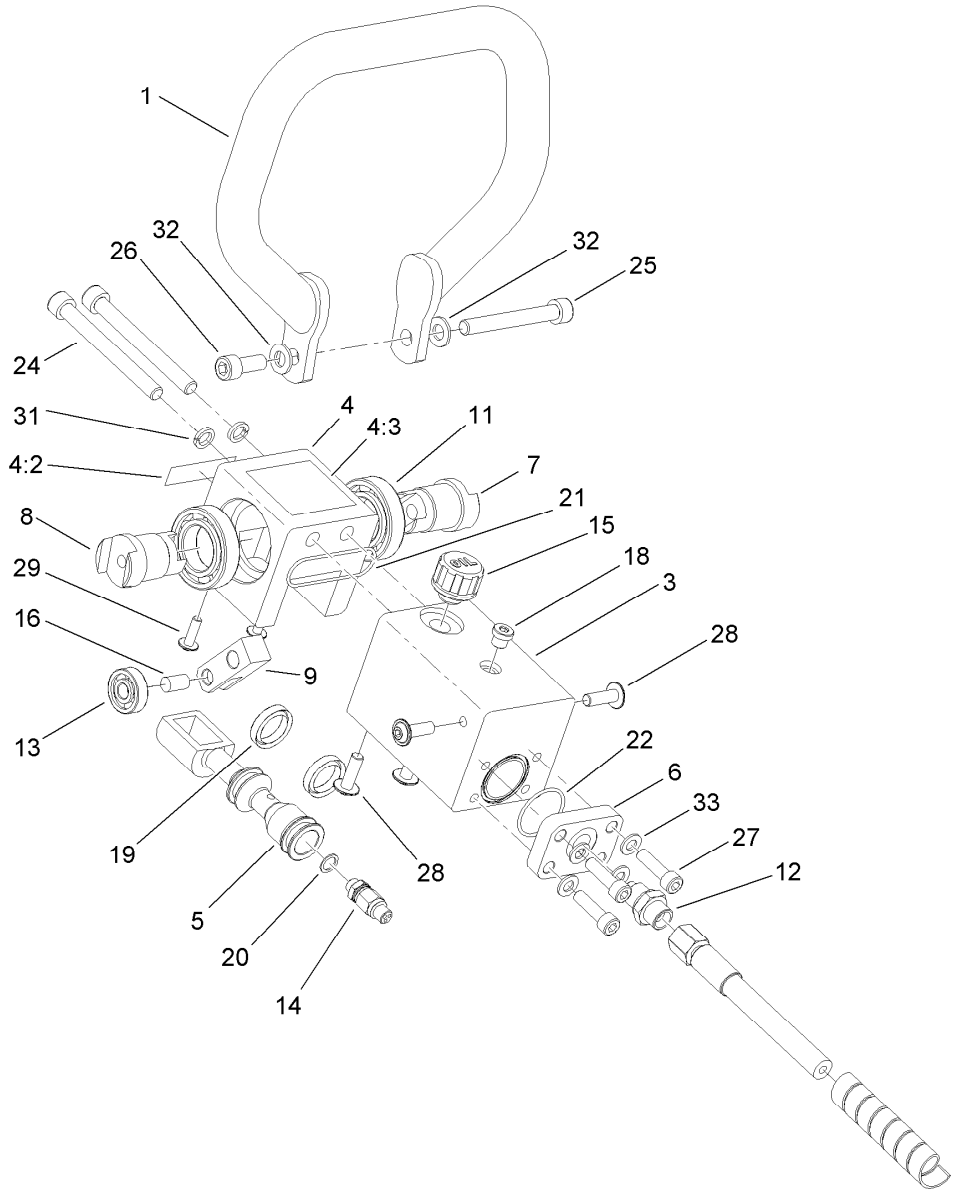

Control and Handle Assembly

Ref.	Part Number	Qty.	Description
1	127-5128	1	Handle-Control, Travel
3	127-5129	1	Manifold-Valve
4	127-5051	1	Manifold-Valve, Upper
4:2	125-8206	1	Decal-Caution
4:3	125-8205	1	Decal-Operation
5	127-5130	1	Spool-Valve
6	127-5131	1	Cover-End
7	127-5132	1	Pivot-Left
8	127-5133	1	Pivot-Right
9	127-5134	1	Arm-Pivot
11	127-5135	1	Bearing
12	127-5136	1	Socket
13	127-5137	1	Bearing
14	127-5138	1	Valve-Check
15	127-5139	1	Plug

Ref.	Part Number	Qty.	Description
16	127-5140	1	Pin
18	127-5141	1	Plug
19	127-5142	1	Packing
20	127-5143	1	Ring-Aluminum
21	127-5144	1	O-Ring
22	127-5145	1	O-Ring
24	127-5146	2	Bolt
25	127-5147	1	Bolt
26	127-5109	1	Bolt
27	127-5148	4	Bolt
28	127-5149	4	Bolt
29	127-5150	2	Bolt
31	127-5151	2	Washer
32	127-5084	2	Washer
33	127-5104	4	Washer

Attachments and Accessories

For 68072 RP-700 Reversible Plate Compactor

Product Name	Model/Part
Paver Mat Kit	68067
EZ Wheel Plate Kit	68076
Water Sprinkling Kit	68077

Notes:

Notes:



Count on it.