Form No. 3377-548 Rev A

TORO®

Count on it.

Parts Catalog

RP-1200D Reversible Plate Compactor

Model No. 68074—Serial No. 313000001 and Up

Register at www.Toro.com.
Original Instructions (EN)

3377-548 A

Ordering Replacement Parts

To order replacement parts, please supply the part number, the quantity, and the description of each part desired.

Understanding Reference Numbers

Each identified part in an illustration has a reference number. The reference number for a part also appears in the parts list, along with other information about the part.

This catalog uses two special reference number formats, one to indicate parts in a service assembly and another to indicate the quantity of a given part in an illustration.

Service Assembly Reference Numbers

Parts in service assemblies have reference numbers in the form a:b. The a represents the reference number of the entire service assembly and the b represents a sequential number unique to each part within the service assembly.

For example, a wheel assembly might be identified by reference number 6, the tire by 6:1, the valve by 6:2, and the wheel by 6:3. When you order the assembly identified by reference number 6, you receive all parts identified by reference numbers 6:1,6:2, and 6:3. However, you may also order any part individually. Reference numbers of this type appear in illustration and in parts lists.

Reference Numbers Indicating Quantity

In an illustration, if a reference number indicates more than one part, the reference number has the form nX y. The n represents the quantity of the part, the X is the multiplication symbol, and the y represents the reference number.

For example, in an illustration, the reference number 2X 37 means that two of the parts identified by reference number 37 are indicated.

List of Abbreviations

AR: as required

ASM: assembly

BBC: blade brake control

BHTF: button head thread forming

CARR: carriage

CCW: counter clockwise

CW: clockwise

DEG: degrees

DPA: Dual Point Adjustment

ECM: electronic control module

EXT: external

FH: flat head

GA: gauge

HD: heavy-duty

HF: hex flange

HH: hex head

HHF: hex head flange

HHFTF: hex head flange thread forming

HJ: hex jam

HLH: hex lag head

HOC: height-of-cut

HP: high pressure

HSBH: hex socket button head

HSFH: hex socket flat head

HSH: hex socket head

HWH: hex washer head

HWHTF: hex washer head thread forming

HYD: hydraulic

LH: left hand

LP: low pressure

LPG: Liquefied Petroleum Gas

NI: nylon insert

NPTF: national pipe thread fine

PFH: phillips flat head

PPH: phillips pan head

PPHTF: phillips pan head thread forming

PRH: phillips round head

PTH: phillips truss head

PTO: power-take-off

RH: right hand

ROPS: roll-over protection system

RRB: rear roller brush

SFH: slotted fillister head

SHH: slotted hex head

SHWH: slotted hex washer head

SPH: slotted pan head

SQH: square head

SRH: slotted round head

STD: standard

TAP: self tapping

TTH: torx truss head

Contents

Bed Plate Assembly 4
Vibratory Assembly No. 127-5061 6
Weight Kit Assembly No. 127-5058 8
Engine Assembly 10
Battery Carrier Assembly No. 127-5064 12
Engine Plate Assembly 14
Frame and Cover Assembly 16
Control Arm Assembly 18
Control and Handle Assembly 20
Decals 22

© 2014—The Toro® Company
8111 Lyndale Avenue South
Bloomington, MN 55420

Contact us at www.Toro.com.
Printed in the USA.
All Rights Reserved

Bed Plate Assembly

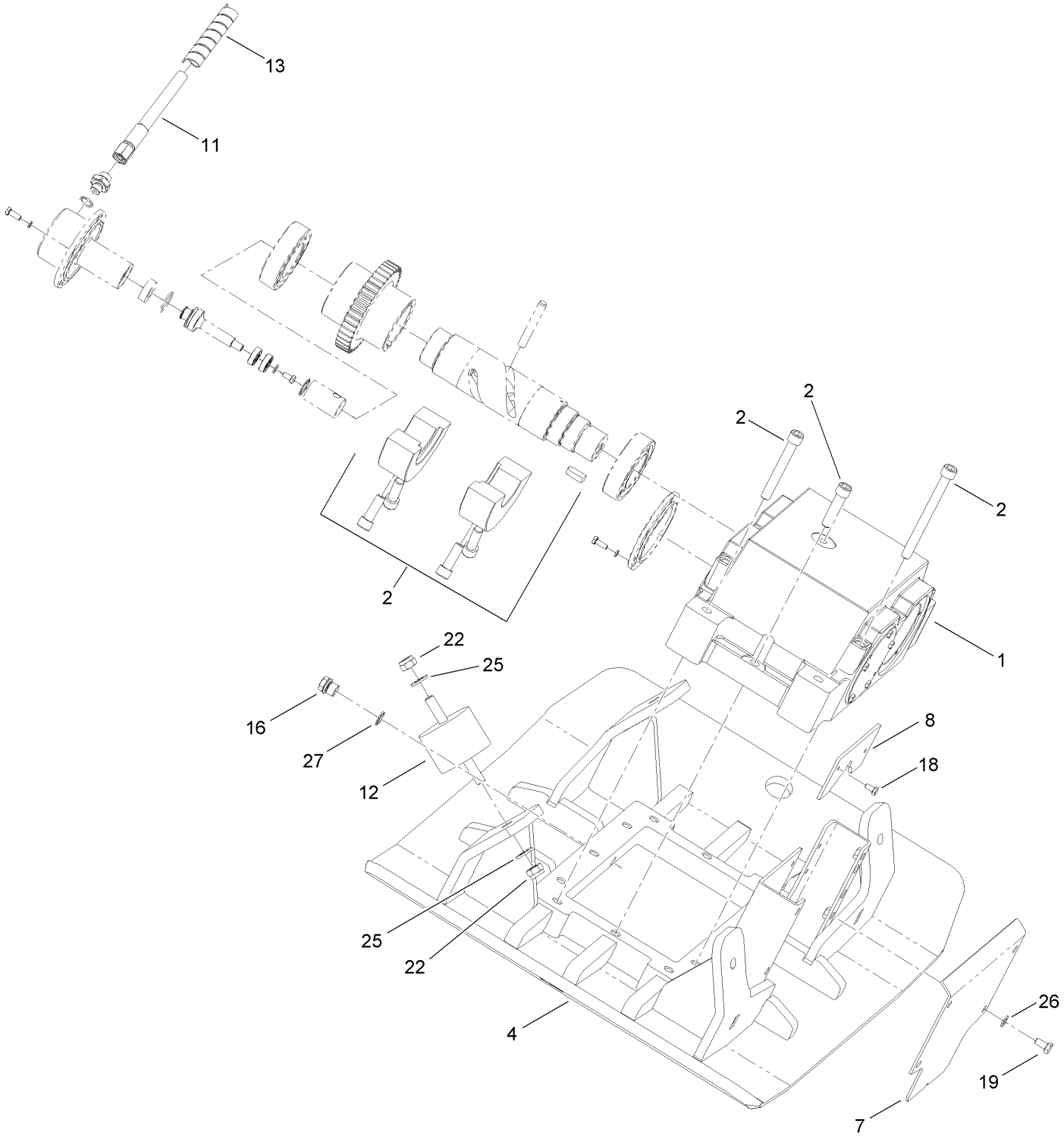

Bed Plate Assembly (continued)

Ref.	Part Number	Qty.	Description
1	127-5061	1	Vibratory ASM
2	127-5058	1	Weight Kit
4	127-5237	1	Plate
7	127-5238	1	Cover-Front
8	127-5239	1	Cover-Back
11	127-5240	1	Hose-HYD
12	127-5241	4	Mount-Rubber
13	127-5075	1	Cover-Hose
16	127-5078	1	Plug
18	127-5242	3	Bolt
19	127-5243	4	Bolt
22	127-5244	4	Nut
25	127-5083	8	Washer
26	127-5104	4	Washer
27	127-5087	1	Ring

Vibratory Assembly No. 127-5061

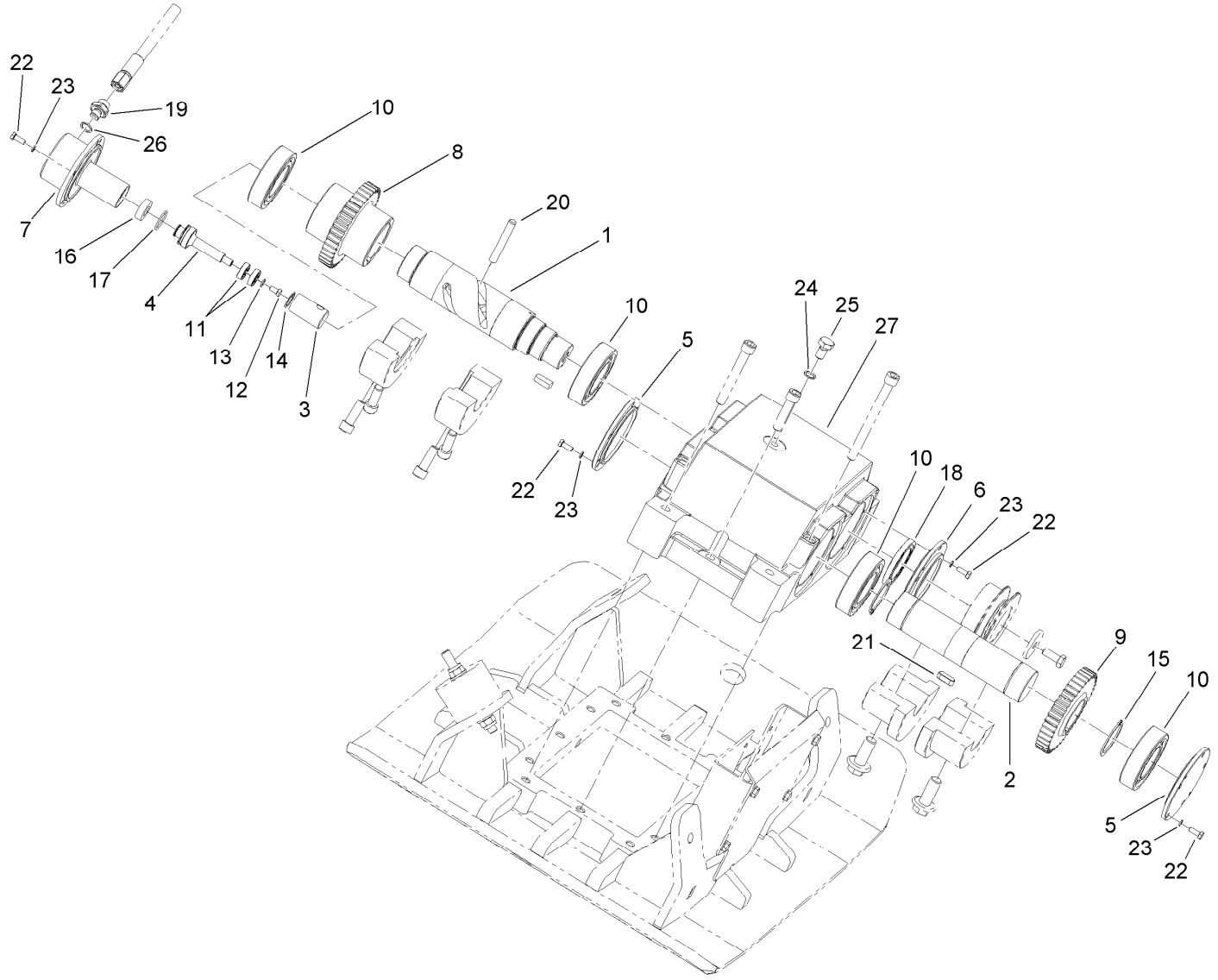

Vibratory Assembly No. 127-5061 (continued)

Ref.	Part Number	Qty.	Description
1	127-5395	1	Shaft-Hollow
2	127-5396	1	Shaft
3	127-5397	1	Slide-Valve
4	127-5398	1	Pistion
5	127-5399	2	Cover
6	127-5400	1	Cover
7	127-5401	1	Cover
8	127-5402	1	Gear
9	127-5403	1	Gear
10	127-5404	4	Bearing
11	127-5405	2	Bearing
12	127-5242	1	Bolt
13	127-5406	1	Washer
14	127-5407	1	Ring
15	127-5408	2	Ring
16	127-5409	1	Spacer
17	127-5410	1	O-Ring
18	127-5411	1	Spacer
19	127-5076	1	Socket
20	127-5412	1	Pin
21	127-5413	1	Key
22	127-5414	20	Bolt
23	127-5415	20	Washer
24	127-5416	1	Ring-Sealing
25	127-5417	1	Bolt
26	127-5418	1	Ring-Sealing
27	127-5419	1	Housing

Weight Kit Assembly No. 127-5058

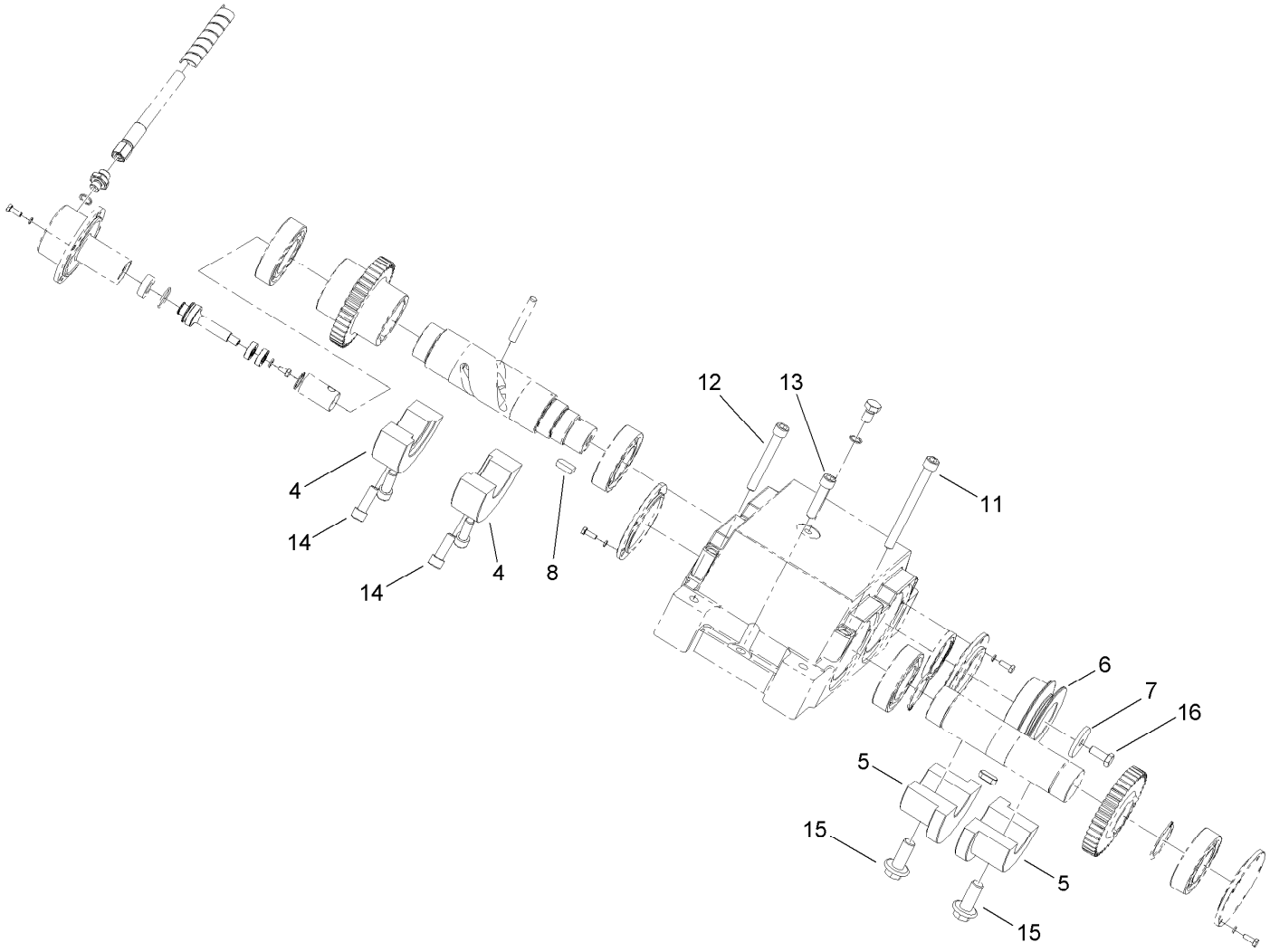

Weight Kit Assembly No. 127-5058 (continued)

Ref.	Part Number	Qty.	Description
4	127-5386	2	Weight I
5	127-5387	2	Weight I I
6	127-5388	1	Pulley
7	127-5389	1	Washer
8	127-5390	1	Adapter
11	127-5391	6	Bolt
12	127-5392	4	Bolt
13	127-5393	2	Bolt
14	127-5359	4	Bolt
15	127-5394	2	Bolt
16	33115-020	1	Screw-HH

Engine Assembly

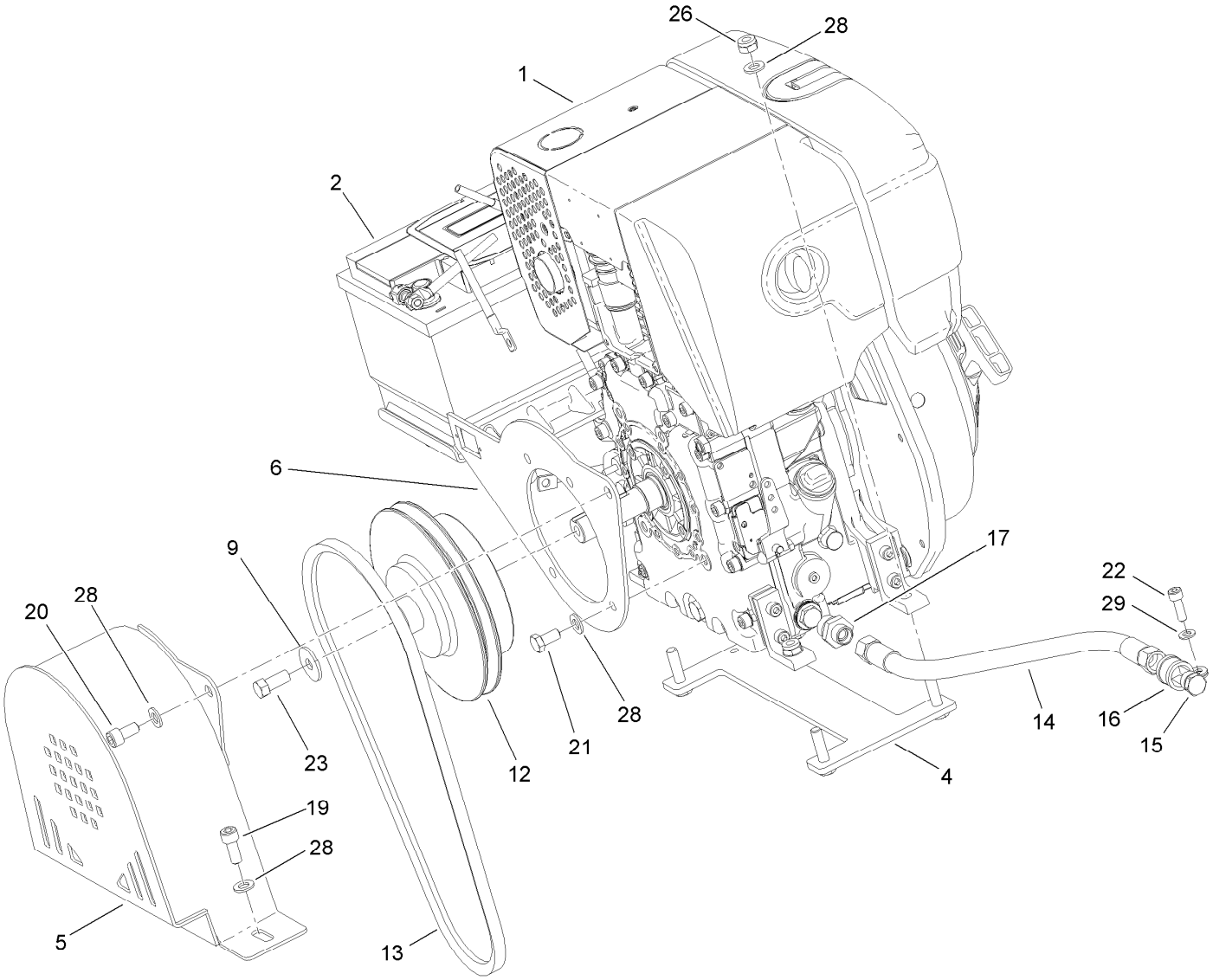

Engine Assembly (continued)

Ref.	Part Number	Qty.	Description
1	127-5429	1	Engine ASM
2	127-5064	1	Battery Carrier ASM
4	127-5430	1	Control-Engine
5	127-5431	1	Cover-Pulley
6	127-5432	1	Holder-Cover
9	127-5433	1	Washer
12	127-5434	1	Coupling
13	127-5435	1	V-Belt
14	127-5436	1	Hose
15	127-5437	1	Plug
16	127-5438	1	Clip-Hose
17	127-5353	1	Socket-Straight
19	127-5180	2	Bolt
20	127-5101	1	Bolt
21	33115-020	5	Screw-HH
22	127-5439	1	Bolt
23	127-5463	1	Bolt
26	127-5103	4	Nut
28	127-5084	3	Washer
29	127-5104	5	Washer

Battery Carrier Assembly No. 127-5064

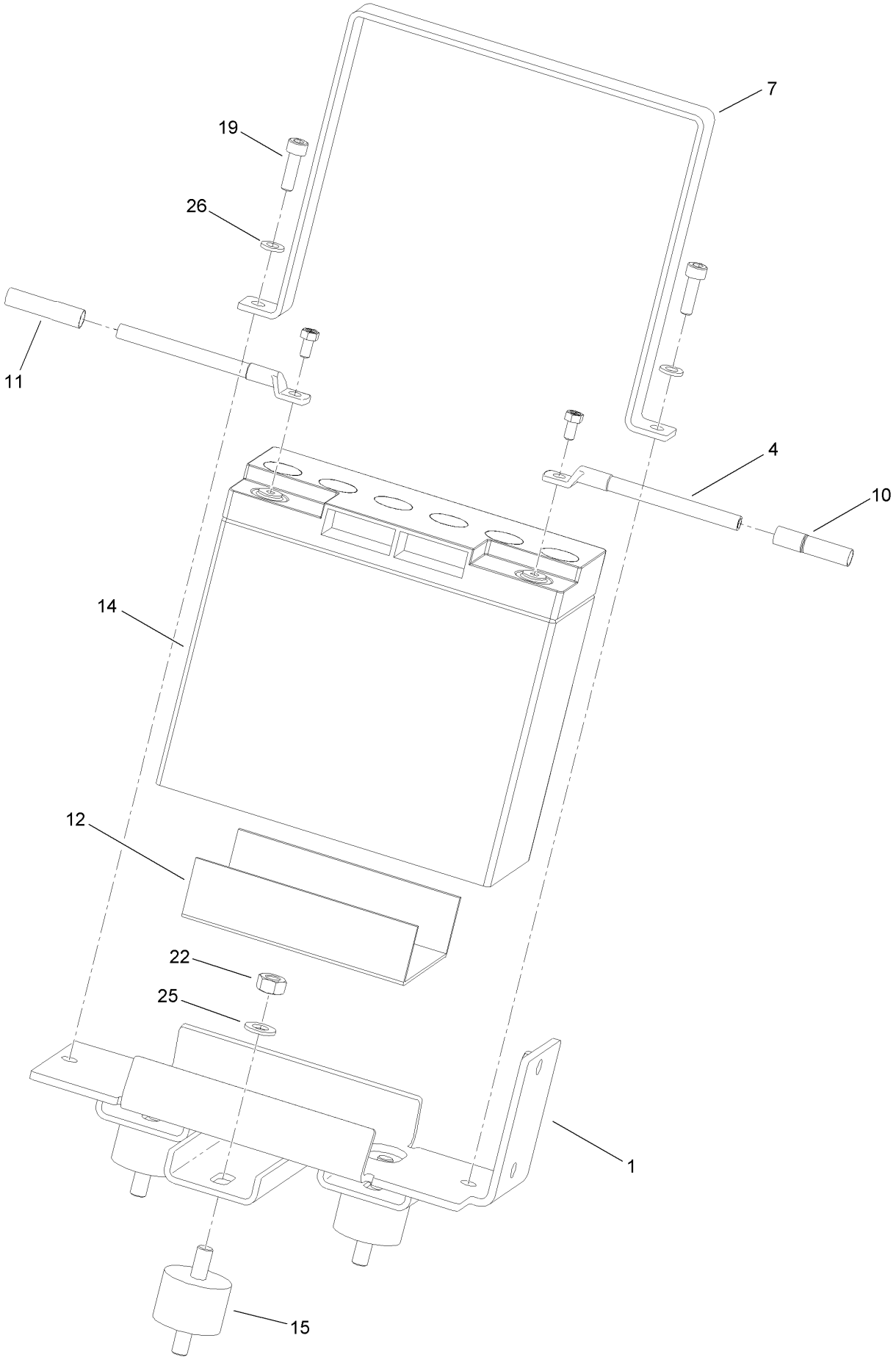

Battery Carrier Assembly No. 127-5064 (continued)

Ref.	Part Number	Qty.	Description
1	127-5444	1	Carrier-Battery
4	127-5445	1	Wire-Battery
7	127-5446	1	Holder-Battery
10	127-5447	2	Tubing-Blue
11	127-5448	2	Tubing-Red
12	127-5449	1	Rubber
14	127-5450	1	Battery
15	127-5451	3	Mount-Rubber
19	127-5221	2	Bolt
22	127-5103	3	Nut
25	127-5104	3	Washer
26	127-5105	3	Washer

Engine Plate Assembly

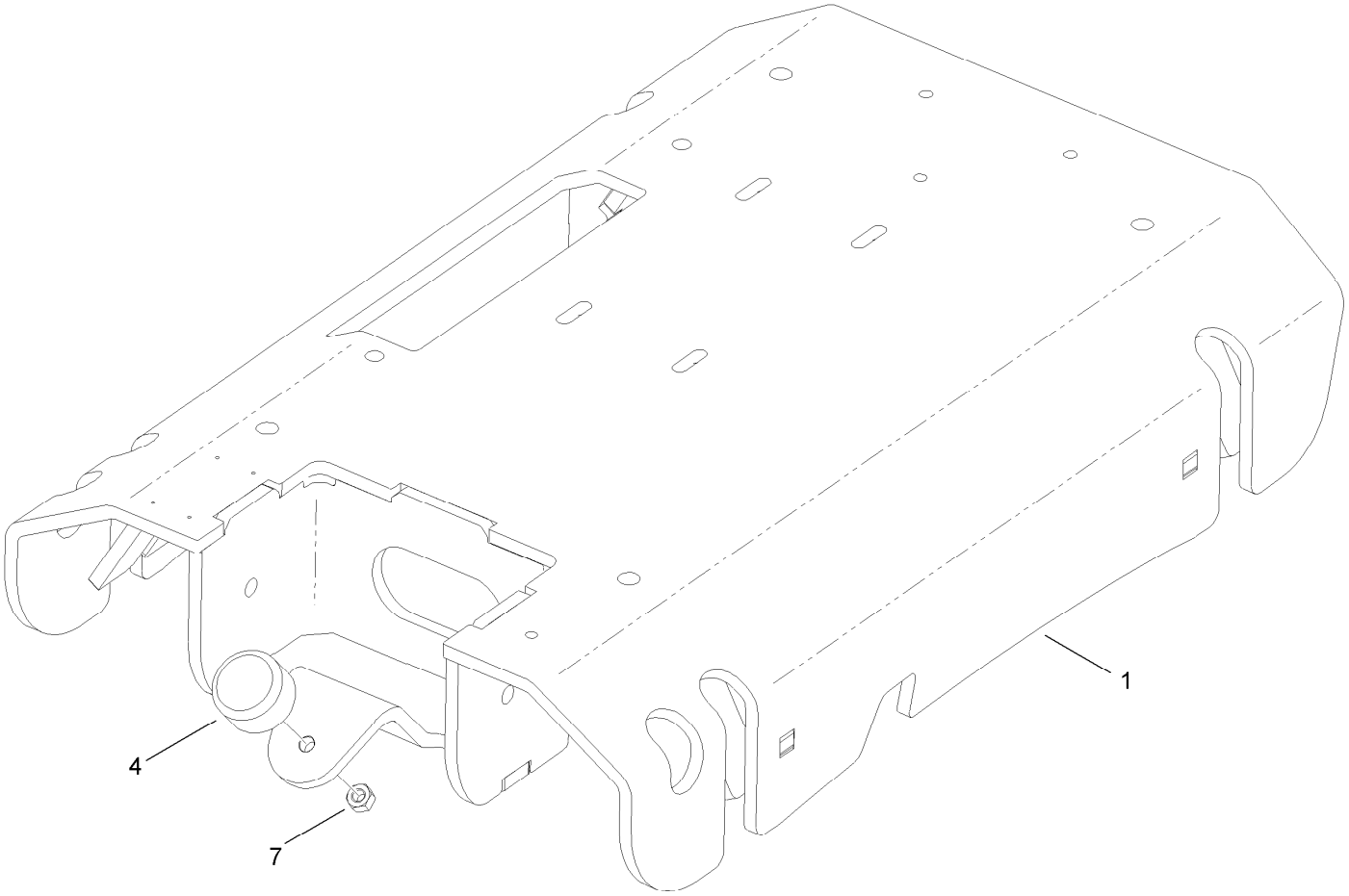

Engine Plate Assembly (continued)

Ref.	*Part Number*	*Qty.*	*Description*
1	127-5440	1	Plate-Engine
4	127-5107	1	Bumper-Rubber
7	33025-00	1	Nut-Lock, NI

Frame and Cover Assembly

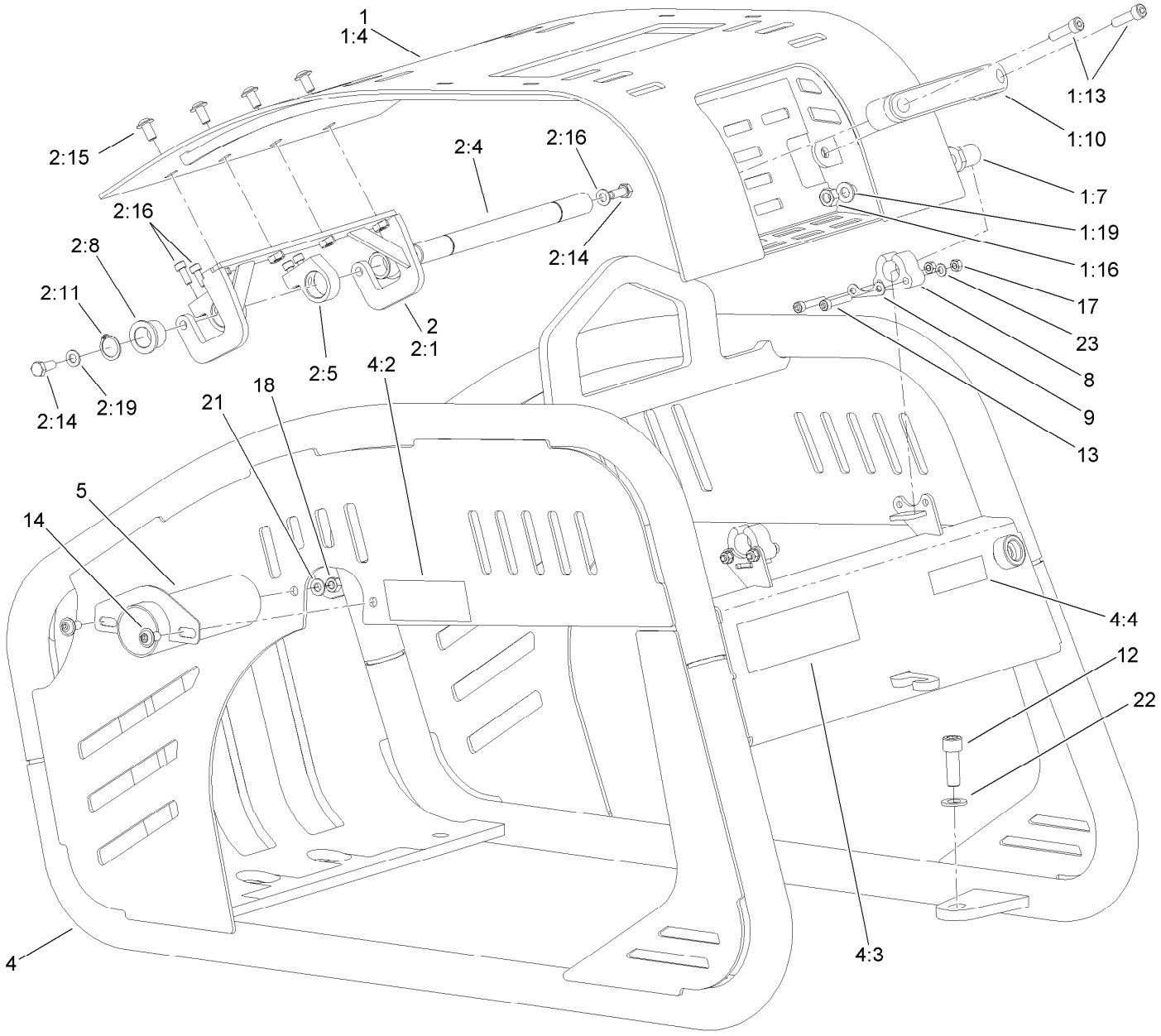

Frame and Cover Assembly (continued)

Ref.	Part Number	Qty.	Description
1	127-5066	1	Top Cover ASM
1:4	127-5452	1	Cover
1:7	127-5421	2	Pin-Handle
1:10	127-5422	1	Handle
1:13	127-5148	2	Bolt
1:16	33025-00	2	Nut-Lock, NI
1:19	127-5084	2	Washer
2	127-5067	1	Shaft And Front Bracket ASM
2:1	127-5423	1	Bracket-Front
2:4	127-5424	1	Shaft
2:5	127-5453	2	Eye-Front
2:8	127-5426	2	Bushing
2:11	127-5427	2	Ring-Sealing
2:14	127-5184	2	Bolt
2:15	127-5149	4	Bolt
2:16	127-5454	4	Bolt
2:19	127-5104	2	Washer
4	127-5065	1	Frame ASM
4:2	125-4963	1	Decal-Surface, Hot
4:3	125-4943	1	Decal-Warning, Plate
4:4	117-2718	1	Decal-Arrester, Spark
5	127-5441	1	Exhaust
8	127-5357	2	Securing-Cover
9	127-5358	2	Washer-Securing
12	127-5359	4	Bolt
13	127-5081	4	Bolt
14	127-5149	2	Bolt
17	127-5360	4	Nut
18	127-5466	2	Nut
21	127-5104	2	Washer
22	127-5083	4	Washer
23	127-5105	4	Washer

Control Arm Assembly

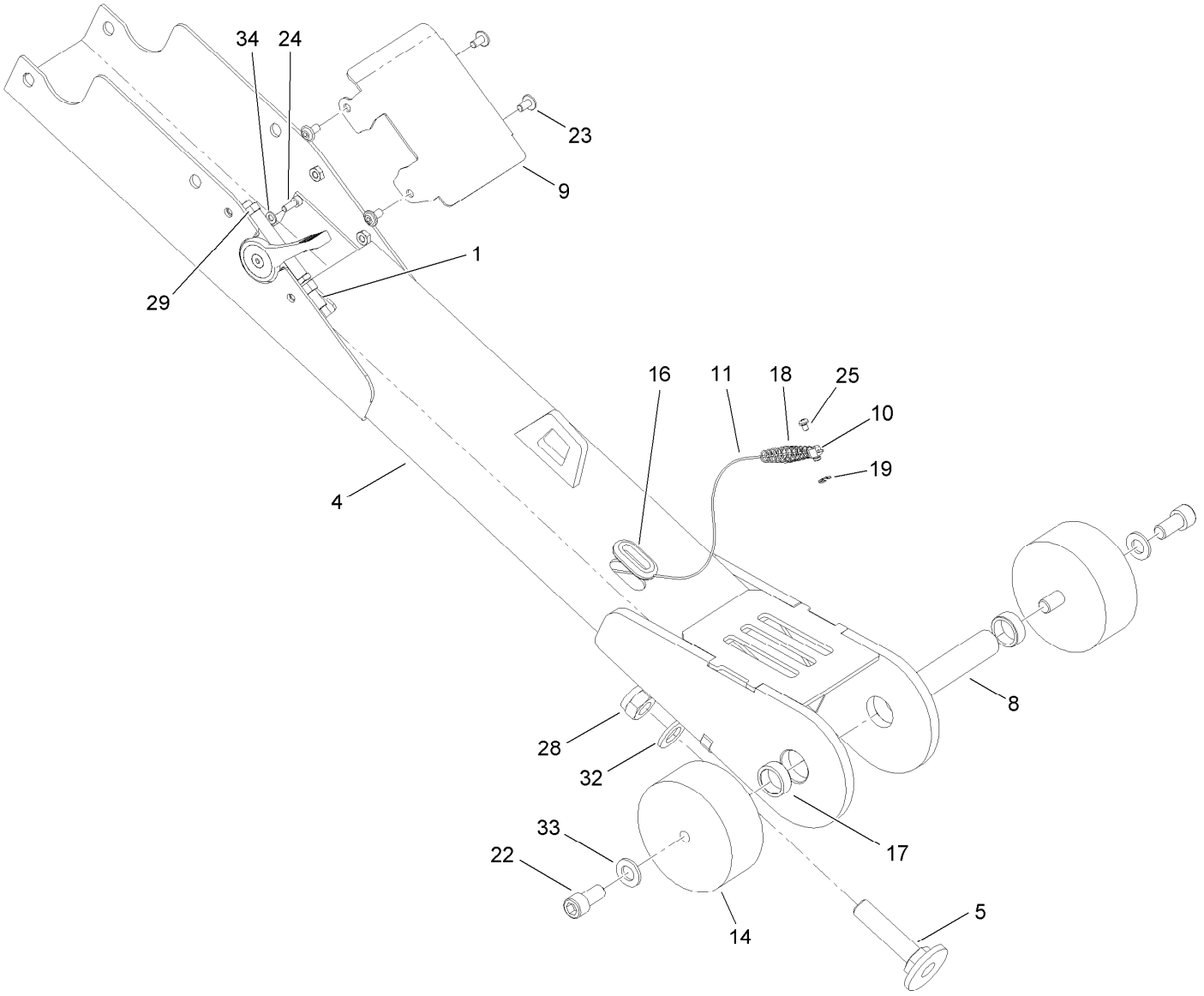

Control Arm Assembly (continued)

Ref.	Part Number	Qty.	Description
1	127-5442	1	Cable-Wire
4	127-5361	1	Arm
5	127-5112	1	Screw-Stop
8	127-5362	1	Pin-Arm
9	127-5363	1	Plate
10	127-5125	1	Nut-Wire
11	127-5117	1	Cable-Throttle
14	127-5364	2	Mount-Rubber
16	127-5118	1	Grommet
17	127-5366	2	Bushing
18	127-5126	1	Spring
19	127-5127	1	Bar-Ring
22	127-5367	2	Bolt
23	127-5119	4	Bolt
24	127-5120	2	Bolt
25	127-5102	1	Bolt
28	127-5121	1	Nut
29	127-5122	1	Nut
32	127-5123	1	Washer
33	127-5084	2	Washer
34	127-5124	2	Washer

Control and Handle Assembly

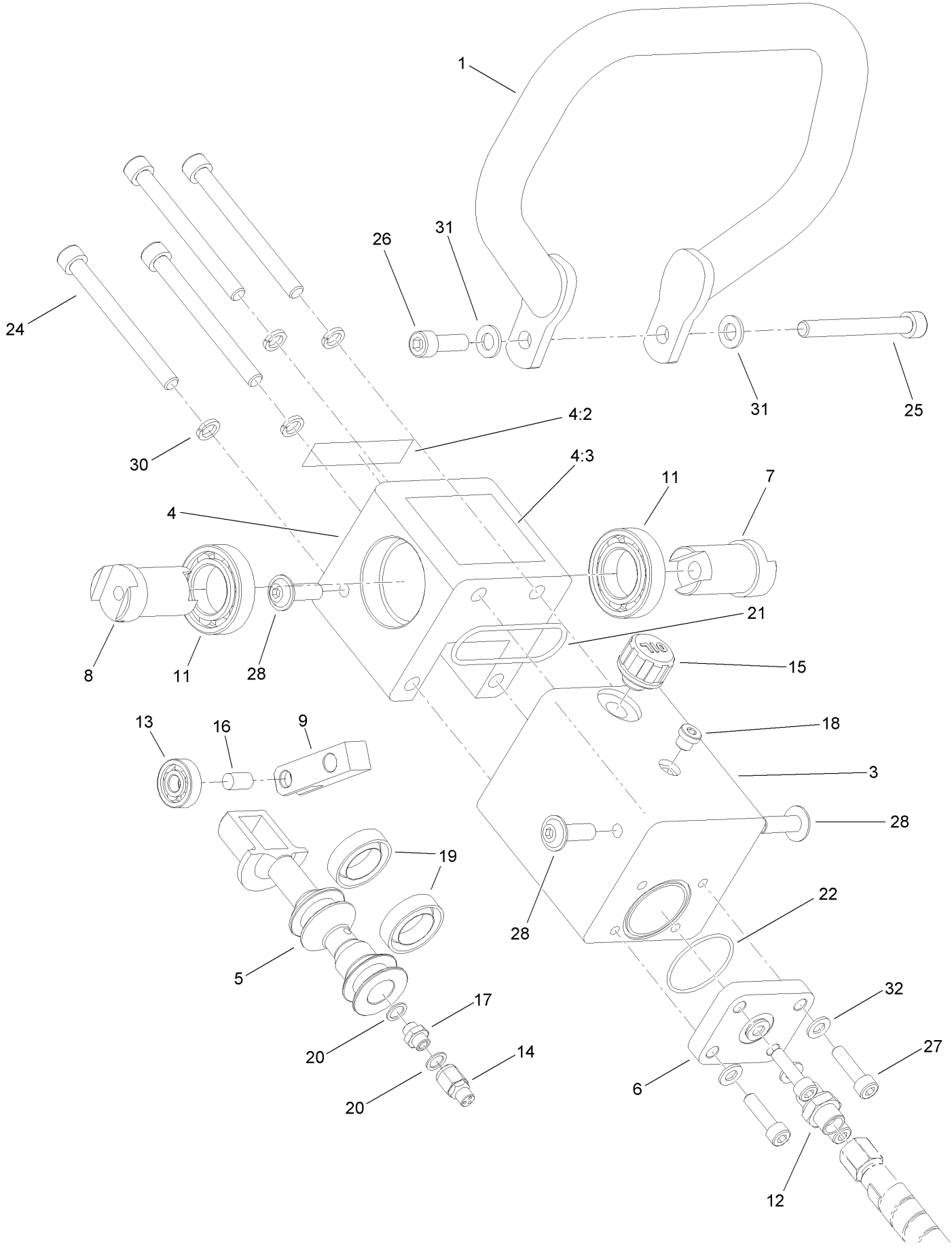

Control and Handle Assembly (continued)

Ref.	Part Number	Qty.	Description
1	127-5368	1	Handle
3	127-5369	1	Body-Manifold (I)
4	127-5060	1	Manifold ASM
4:2	125-8206	1	Decal-Caution
4:3	125-8205	1	Decal-Operation
5	127-5370	1	Pistion
6	127-5371	1	Plate-Sealing
7	127-5372	1	Pivot I
8	127-5373	1	Pivot I I
9	127-5374	1	Lever
11	127-5135	2	Bearing
12	127-5136	1	Socket
13	127-5137	1	Bearing
14	127-5375	1	Valve-Direct
15	127-5139	1	Plug
16	127-5140	1	Pin
17	127-5376	1	Couping
18	127-5141	1	Plug
19	127-5377	2	Packing
20	127-5086	2	Ring
21	127-5378	1	O-Ring
22	127-5379	1	O-Ring
24	127-5380	2	Bolt
25	127-5381	1	Bolt
26	127-5109	1	Bolt
27	127-5382	4	Bolt
28	127-5383	4	Bolt
30	127-5151	2	Washer
31	127-5084	2	Washer
32	127-5104	4	Washer

Decals

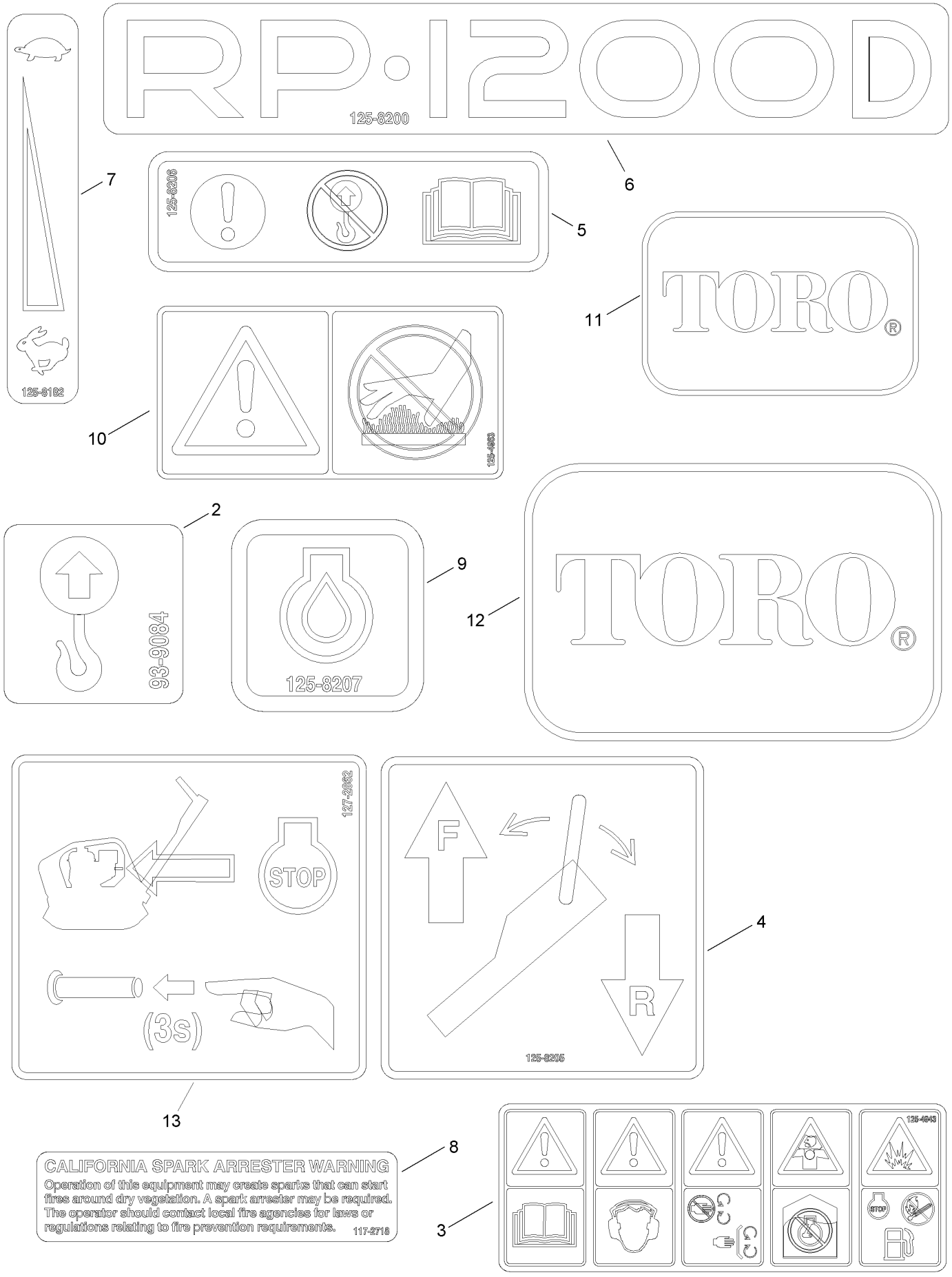

RP·1200D
125-8200
6
7
125-8206
5
125-8182
TORO®
11
10
125-4863
2
93-9084
9
125-8207
12
TORO®
127-2862
STOP
(3s)
F
R
125-8205
4
13
CALIFORNIA SPARK ARRESTER WARNING
Operation of this equipment may create sparks that can start fires around dry vegetation. A spark arrester may be required. The operator should contact local fire agencies for laws or regulations relating to fire prevention requirements.
117-2718
8
3
125-4843
STOP

Decals (continued)

Ref.	Part Number	Qty.	Description
2	93-9084	1	Decal-Point, Lift
3	125-4943	1	Decal-Warning, Plate
4	125-8205	1	Decal-Operation
5	125-8206	1	Decal-Caution
6	125-8200	2	Decal
7	125-8182	1	Decal-Throttle
8	117-2718	1	Decal-Arrester, Spark
9	125-8207	1	Decal-Oil, Engine
10	125-4963	1	Decal-Surface, Hot
11	70-2200	2	Decal
12	104-3989	1	Decal
13	127-2862	1	Decal-Stop, Engine



Count on it.