Form No. 3377-713 Rev A

TORO®

Count on it.

Parts Catalog

MVP Filter Belt and Blade Kit

TITAN® Series Riding Mower with 48in Deck

Model No. 127-1628

Register at www.Toro.com.
Original Instructions (EN)

3377-713 A

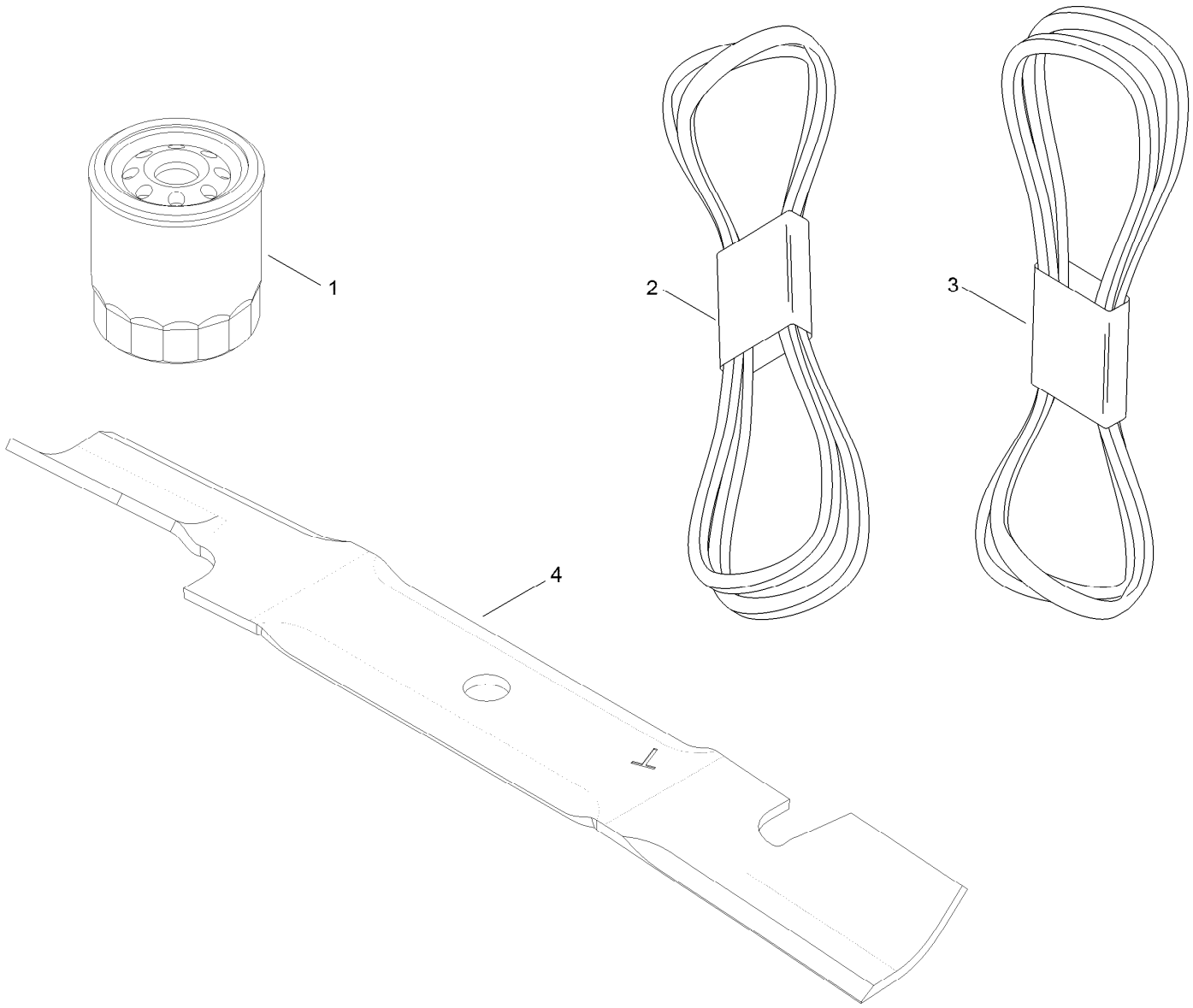

MVP Filter, Belt and Blade Kit No. 127-1628

Ref.	*Part Number*	*Qty.*	*Description*
1	109-3321	2	Element-Oil Filter, HYD
2	115-9613	1	V-Belt
3	117-7325	1	V-Belt
4	117-7277-03	3	Blade-Hi Flo, 16.50In