Form No. 3376-120 Rev B

TORO®

Count on it.

Operator's Manual

Greensmaster® 800, 1000, and 1600 Mower

Model No. 04054—Serial No. 313000001 and Up

Model No. 04055—Serial No. 313000001 and Up

Model No. 04056—Serial No. 313000001 and Up

Register at www.Toro.com.
Original Instructions (EN)

CE

3376-120 B

This product complies with all relevant European directives, for details please see the separate product specific Declaration of Conformity (DOC) sheet.

WARNING

CALIFORNIA
Proposition 65 Warning

The engine exhaust from this product contains chemicals known to the State of California to cause cancer, birth defects, or other reproductive harm.

Because in some areas there are local, state, or federal regulations requiring that a spark arrester be used on the engine of this machine, a spark arrester is incorporated with the muffler assembly.

Genuine Toro spark arresters are approved by the USDA Forestry Service.

Important: This engine is equipped with a spark arrester muffler. It is a violation of California Public Resource Code Section 4442 to use or operate the engine on any forest-covered, brush-covered, or grass-covered land without a spark arrester muffler maintained in working order, or the engine constricted, equipped, and maintained for the prevention of fire. Other states or federal areas may have similar laws.

This spark ignition system complies with Canadian ICES-002.

Introduction

This machine is a walk-behind, reel-blade lawn mower intended to be used by professional, hired operators in commercial applications. It is primarily designed for cutting grass on well-maintained lawns in parks, golf courses, sports fields, and on commercial grounds. It is not designed for cutting brush, mowing grass and other growth alongside highways, or for agricultural uses.

Read this information carefully to learn how to operate and maintain your product properly and to avoid injury and product damage. You are responsible for operating the product properly and safely.

You may contact Toro directly at www.Toro.com for product and accessory information, help finding a dealer, or to register your product.

Whenever you need service, genuine Toro parts, or additional information, contact an Authorized Service Dealer or Toro Customer Service and have the model and serial numbers of your product ready. Figure 1 identifies the location of the model and serial numbers on the product. Write the numbers in the space provided.

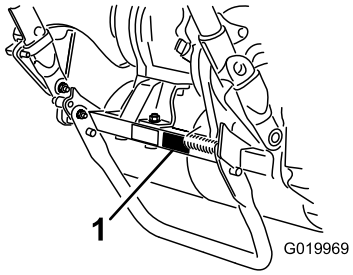

Figure 1

1. Location of the model and serial numbers-Traction unit

Model No. _____

Serial No. _____

This manual identifies potential hazards and has safety messages identified by the safety alert symbol (Figure 2), which signals a hazard that may cause serious injury or death if you do not follow the recommended precautions.



Figure 2

1. Safety alert symbol.

This manual uses two other words to highlight information. **Important** calls attention to special mechanical information and **Note** emphasizes general information worthy of special attention.

© 2013—The Toro® Company
8111 Lyndale Avenue South
Bloomington, MN 55420

Contact us at www.Toro.com.
Printed in the USA.
All Rights Reserved

Contents

Introduction 2
Safety 4
Safe Operating Practices 4
Toro Mower Safety 5
For Model 04054 6
For Model 04055 6
For Model 04056 6
Safety and Instructional Decals 7
Setup 9
1 Installing and Adjusting the Handle 9
2 Installing the Kickstand (For GR800 and GR1600) 10
3 Installing the Transport Wheel Shafts (For GR1000 and GR1600) 11
4 Installing the Transport Wheels (Optional) 11
5 Adjusting the Cutting Unit 12
6 Installing the Grass Basket 12
Product Overview 13
Controls 13
Specifications 15
Attachments/Accessories 16
Operation 16
Think Safety First 16
Checking the Engine Oil Level 16
Filling the Fuel Tank 16
Checking the Interlock Switch Operation 17
Starting and Stopping the Engine 18
Driving the Machine in Transport 18
Preparing to Mow 18
Prior to Mowing 18
Method of Mowing 18
Control Operation 18
Maintenance 20
Recommended Maintenance Schedule(s) 20
Daily Maintenance Checklist 21
Lubrication 22
Greasing the Machine 22
Engine Maintenance 23
Servicing the Engine Oil 23
Servicing the Air Cleaner 24
Replacing the Spark Plug 24
Fuel System Maintenance 25
Cleaning the Fuel Filter 25
Electrical System Maintenance 26
Servicing the Interlock Switch 26
Brake Maintenance 26
Adjusting the Service/Parking Brake 26
Belt Maintenance 28
Adjusting the Belts 28
Replacing the Differential Belt 30
Controls System Maintenance 31
Adjusting the Traction Control 31
Cutting Unit Maintenance 31
Leveling the Rear Drum to the Reel 31
Adjusting the Bedknife to the Reel 32
Adjusting the Height of Cut 32
Adjusting the Grass Shield Height 33
Adjusting the Cut-Off Bar 34
Bedbar Identification 34
Setting the Machine to Match Turf Conditions 35
Servicing the Bedbar 36
Backlapping the Reel 36
Storage 37

Safety

This machine meets or exceeds CEN standard EN 836:1997, ISO standard 5395:1990, and ANSI B71.4-2004 specifications in effect at the time of production when the Operator Presence Kit, Part No. 112-9282 is installed.

Improper use or maintenance by the operator or owner can result in injury. To reduce the potential for injury, comply with these safety instructions and always pay attention to the safety alert ⚠ symbol, which means **Caution, Warning, or Danger**—personal safety instruction. Failure to comply with the instruction may result in personal injury or death.

Safe Operating Practices

The following instructions are from the CEN standard EN 836:1997, ISO standard 5395:1990, and ANSI B71.4-2004.

Training

- Read the *Operator's Manual* and other training material carefully. Be familiar with the controls, safety signs, and the proper use of the equipment.
- Never allow children or people unfamiliar with these instructions to use or service the mower. Local regulations may restrict the age of the operator.
- Never mow while people, especially children, or animals are nearby.
- Keep in mind that the operator or user is responsible for accidents or hazards occurring to other people or their property.
- The owner/user can prevent and is responsible for accidents or injuries occurring to himself or herself, other people, or property.

Preparation

- While mowing, always wear substantial footwear, long trousers, hard hat, safety glasses, and hearing protection. Long hair, loose clothing, or jewelry may get tangled in moving parts. Do not operate the equipment when barefoot or wearing open sandals.
- Thoroughly inspect the area where the equipment is to be used and remove all objects which may be thrown by the machine.
- **Warning**—Fuel is highly flammable. Take the following precautions:
  - Store fuel in containers specifically designed for this purpose.
  - Refuel outdoors only and do not smoke while refuelling.
  - Add fuel before starting the engine. Never remove the cap of the fuel tank or add fuel while the engine is running or when the engine is hot.
  - If fuel is spilled, do not attempt to start the engine but move the machine away from the area of spillage and avoid creating any source of ignition until fuel vapors have dissipated.
  - Secure all fuel tanks and container caps.
- Replace faulty silencers.
- Evaluate the terrain to determine what accessories and attachments are needed to properly and safely perform the job. Only use accessories and attachments approved by the manufacturer.
- Check that operator's presence controls, safety switches and shields are attached and functioning properly. Do not operate unless they are functioning properly.

Operation

- Do not operate the engine in a confined space where dangerous carbon monoxide fumes can collect.
- Mow only in daylight or in good artificial light.
- Before attempting to start the engine, disengage all blade attachment clutches, shift into neutral, and engage the parking brake.
- Stay alert for holes in the terrain and other hidden hazards.
- Watch out for traffic when crossing or near roadways.
- Stop the blades rotating before crossing surfaces other than grass.
- When using any attachments, never direct discharge of material toward bystanders nor allow anyone near the machine while in operation.
- Never operate the machine with damaged guards, shields, or without safety protective devices in place. Be sure all interlocks are attached, adjusted properly, and functioning properly.
- Do not change the engine governor settings or overspeed the engine. Operating the engine at excessive speed may increase the hazard of personal injury.
- Before leaving the operator's position:
  - stop on level ground;
  - disengage the power take-off and lower the attachments;
  - change into neutral and set the parking brake;
  - stop the engine.
- Disengage drive to attachments when transporting or not in use.
- Stop the engine and disengage drive to attachment:
  - before refuelling;
  - before removing the grass basket;
  - before making height adjustment unless adjustment can be made from the operator's position;
  - before clearing blockages;
  - before checking, cleaning or working on the mower;
  - after striking a foreign object or if an abnormal vibration occurs. Inspect the mower for damage and make repairs before restarting and operating the equipment.

- Reduce the throttle setting before stopping engine and, if the engine is provided with a fuel shut-off valve, turn the valve off at the conclusion of mowing.
- Keep hands and feet away from the cutting unit.
- Slow down and use caution when making turns and crossing roads and sidewalks. Stop reels if not mowing.
- Do not operate the mower under the influence of alcohol or drugs.
- Lightning can cause severe injury or death. If lightning is seen or thunder is heard in the area, do not operate the machine; seek shelter.
- Use care when loading or unloading the machine into a trailer or truck.
- Use care when approaching blind corners, shrubs, trees, or other objects that may obscure vision.

Maintenance and Storage

- Keep all nuts, bolts and screws tight to be sure the equipment is in safe working condition.
- Never store the equipment with fuel in the tank inside a building where fumes may reach an open flame or spark.
- Allow the engine to cool before storing in any enclosure.
- To reduce the fire hazard, keep the engine, silencer, and fuel storage area free of grass, leaves, or excessive grease.
- Check the grass basket frequently for wear or deterioration.
- Keep all parts in good working condition and all hardware and hydraulic fittings tightened. Replace all worn or damaged parts and decals.
- If the fuel tank has to be drained, do this outdoors.
- Be careful during adjustment of the machine to prevent entrapment of the fingers between moving blades and fixed parts of the machine.
- Disengage drives, disengage the cutting unit, set parking brake, stop engine and disconnect spark plug wire. Wait for all movement to stop before adjusting, cleaning or repairing.
- Clean grass and debris from cutting unit, drives, mufflers, and engine to help prevent fires. Clean up oil or fuel spillage.
- Carefully release pressure from components with stored energy.
- Remove the spark plug wire before making any repairs.
- Use care when checking the reel. Wear gloves and use caution when servicing them.
- Keep hands and feet away from moving parts. If possible, do not make adjustments with the engine running.

Toro Mower Safety

The following list contains safety information specific to Toro products or other safety information that you must know that is not included in the CEN, ISO, or ANSI standard.

This product is capable of amputating hands and feet and throwing objects. Always follow all safety instructions to avoid serious injury or death.

Use of this product for purposes other than its intended use could prove dangerous to user and bystanders.

- Know how to stop the engine quickly.
- Do not operate the machine while wearing tennis shoes or sneakers.
- Wearing safety shoes and long pants is advisable and required by some local ordinances and insurance regulations.
- Handle gasoline carefully. Wipe up any spills.
- Check the safety interlock switches daily for proper operation. If a switch should fail, replace the switch before operating the machine.
- Always stand behind the handle when starting and operating the machine.
- Using the machine demands attention. To prevent loss of control:
  - Do not operate close to sand traps, ditches, creeks, or other hazards.
  - Reduce speed when making sharp turns. Avoid sudden stops and starts.
  - When near or crossing roads, always yield the right-of-way.
- The grass basket must be in place, during the mowing operation, for maximum safety. Shut the engine off before emptying the basket.
- Do not touch the engine, muffler, or exhaust pipe while the engine is running or soon after it has stopped because these areas could be hot enough to cause burns.
- When a person or pet appears unexpectedly in or near the mowing area, **stop mowing**. Careless operation, combined with terrain angles, ricochets, or improperly positioned guards can lead to thrown object injuries. Do not resume mowing until the area is cleared.

Maintenance and Storage

- Check all fuel lines for tightness and wear on a regular basis. Tighten or repair them as needed.
- If the engine must be running to perform a maintenance adjustment, keep hands, feet, clothing, and any parts of the body away from the cutting unit, attachments, and any moving parts. Keep everyone away.
- To ensure safety and accuracy, have an Authorized Toro Distributor check the maximum engine speed with a tachometer. Maximum governed engine speed should be 3375 ± 100 RPM.
- If major repairs are ever needed or if assistance is desired, contact an Authorized Toro Distributor.
- Use only Toro-approved attachments and replacement parts. The warranty may be voided if used with unapproved attachments.

For Model 04054

Sound Power Level

This unit has a guaranteed sound power level of 95 dBA, which includes an Uncertainty Value (K) of 1 dBA.

Sound power level was determined according to the procedures outlined in ISO 11094.

Sound Pressure Level

This unit has a sound pressure level at the operator's ear of 85 dBA, which includes an Uncertainty Value (K) of 1 dBA.

Sound pressure level was determined according to the procedures outlined in EN 836.

Vibration Level

Hand-Arm

Measured vibration level for left hand = 4.00 m/s^2

Measured vibration level for right hand = 2.87 m/s^2

Uncertainty Value (K) = 0.5 m/s^2

Measured values were determined according to the procedures outlined in EN 836.

For Model 04055

Sound Power Level

This unit has a guaranteed sound power level of 95 dBA, which includes an Uncertainty Value (K) of 1 dBA.

Sound power level was determined according to the procedures outlined in ISO 11094.

Sound Pressure Level

This unit has a sound pressure level at the operator's ear of 84 dBA, which includes an Uncertainty Value (K) of 1 dBA.

Sound pressure level was determined according to the procedures outlined in EN 836.

Vibration Level

Hand-Arm

Measured vibration level for right hand = 2.52 m/s^2

Measured vibration level for left hand = 2.39 m/s^2

Uncertainty Value (K) = 1.3 m/s^2

Measured values were determined according to the procedures outlined in EN 836.

For Model 04056

Sound Power Level

This unit has a guaranteed sound power level of 95 dBA, which includes an Uncertainty Value (K) of 1 dBA.

Sound power level was determined according to the procedures outlined in ISO 11094.

Sound Pressure Level

This unit has a sound pressure level at the operator's ear of 85 dBA, which includes an Uncertainty Value (K) of 1 dBA.

Sound pressure level was determined according to the procedures outlined in EN 836.

Vibration Level

Hand-Arm

Measured vibration level for right hand = 3.35 m/s^2

Measured vibration level for left hand = 2.59 m/s^2

Uncertainty Value (K) = 1.7 m/s^2

Measured values were determined according to the procedures outlined in EN 836.

Safety and Instructional Decals

Safety decals and instructions are easily visible to the operator and are located near any area of potential danger. Replace any decal that is damaged or lost.

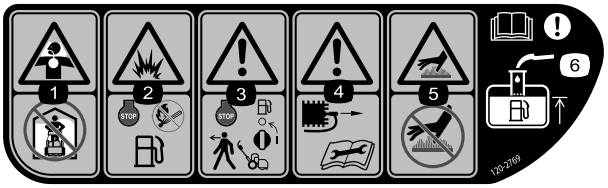

120–2769

1. Toxic gas inhalation hazard—do not operate indoors.
2. Explosion hazard—stop the engine and keep away from open flames when refueling.
3. Warning—stop the engine and turn off the fuel before leaving the machine.
4. Warning—disconnect the spark plug wire and read the instruction before servicing or performing maintenance.
5. Hot surface/burn hazard—do not touch hot surfaces.
6. Warning—read the *Operator's Manual*; when adding fuel to the tank, only fill to the bottom of the fill tube.

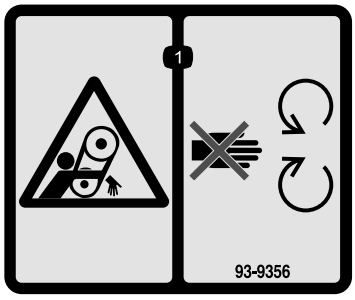

93-9356

1. Entanglement hazard—stay away from moving parts.

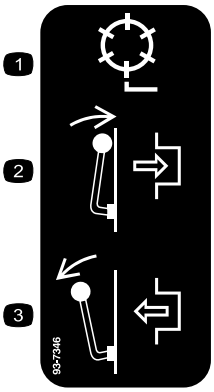

93-7346

1. Reel drive
2. Engage
3. Disengage

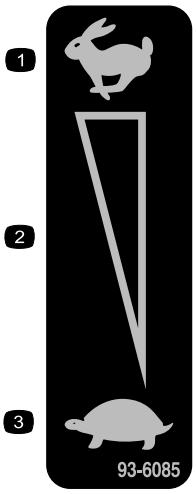

93-6085

1. Fast
2. Continuous variable setting
3. Slow

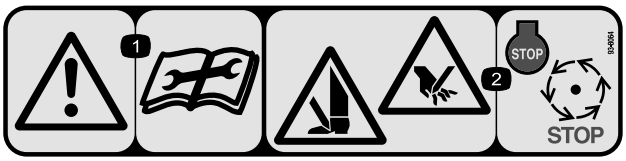

93-8064

1. Warning—read the instructions before servicing or performing maintenance.
2. Cutting hazard of foot or hand—stop the engine and wait for moving parts to stop.



115-1614

1. Warning—read the *Operator's Manual.*
2. Warning—do not operate the machine unless you are trained.
3. Thrown object hazard—keep bystanders a safe distance from the machine.
4. Warning—stay away from moving parts; keep all guards in place.

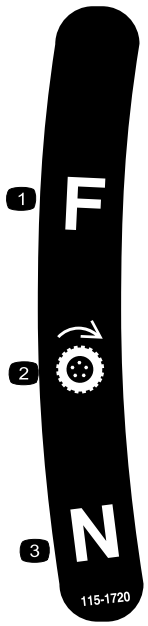

115-1720

1. Forward
2. Drive wheel
3. Neutral

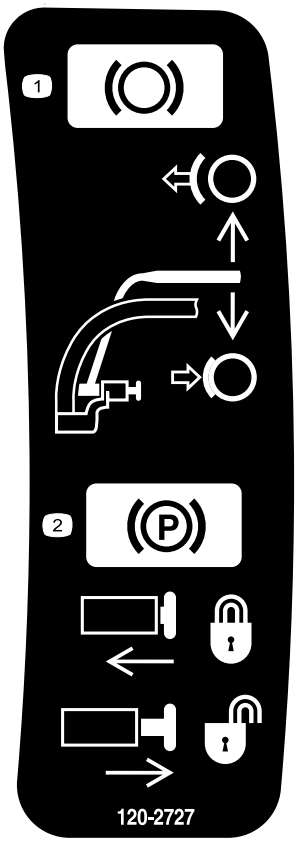

120-2727

1. Brake—to engage, pull the lever toward the handle; to disengage, release the lever.
2. Parking brake—to lock, pull the lever toward the handle, press the button in and release the lever against the locking button; to release, pull the lever toward the handle until the button releases and release the lever..

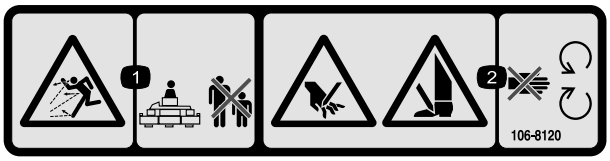

106-8120

1. Thrown object hazard—keep bystanders a safe distance from the machine.
2. Cutting hazard of hand and foot—stay away from moving parts.

Setup

Loose Parts

Use the chart below to verify that all parts have been shipped.

Procedure	Description	Qty.	Use
1	Handle Cable tie	1 4	Install the handle.
2	Kickstand assembly Spring	1 1	Install the kickstand.
3	Wheel shaft, right Wheel shaft, left	1 1	Install the transport wheel shafts.
4	Transport wheels (optional)	2	Install the transport wheels (optional).
5	No parts required	–	Adjust the cutting unit.
6	Grass basket	1	Install the grass basket.

Media and Additional Parts

Description	Qty.	Use
Operator's Manual	1	Read or view before operating the machine
Engine Operator's Manual	1	
Parts Catalog	1	
Operator Training Material	1	
Certificate of Compliance	1	

Note: Determine the left and right sides of the machine from the normal operating position.

1

Installing and Adjusting the Handle

Parts needed for this procedure:

1	Handle
4	Cable tie

Installing the Handle

1. Remove the bolts and locknuts securing the bottom of the handle arms to each side of the mower (Figure 3).

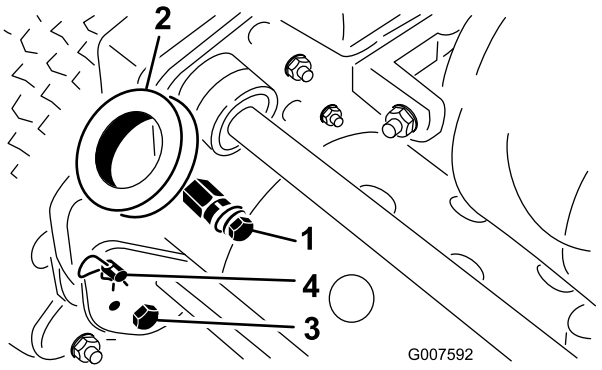

Figure 3

1. Mounting pins
2. Handle arms
3. Bolt and locknut
4. Hairpin cotter and ring pin

2. Remove the hairpin cotters and ring pins securing the handle arms to the rear of the frame (Figure 3).
3. Insert the handle ends through the holes in the handle arms and align the holes with the mounting pins (Figure 3).
4. Squeeze the handle ends inward and install them on the mounting pins (Figure 4).

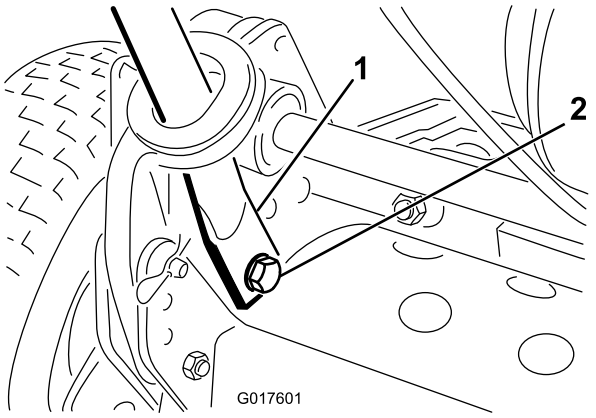

Figure 4

1. Handle end
2. Bolt, washer, and lockwasher

5. Secure the handle ends to the mounting pins with the bolts, washers, and lockwashers provided (Figure 4).
6. Secure the bottom of the handle arms to each side of the mower with the bolts and locknuts previously removed (Figure 4). Ensure that you install the bushings in the handle arm mounting holes.
7. Secure the handle arms to the rear of the frame with the hairpin cotters and ring pins previously removed (Figure 4).
8. Secure the cables and wire harness to the handle with cable ties (Figure 5).

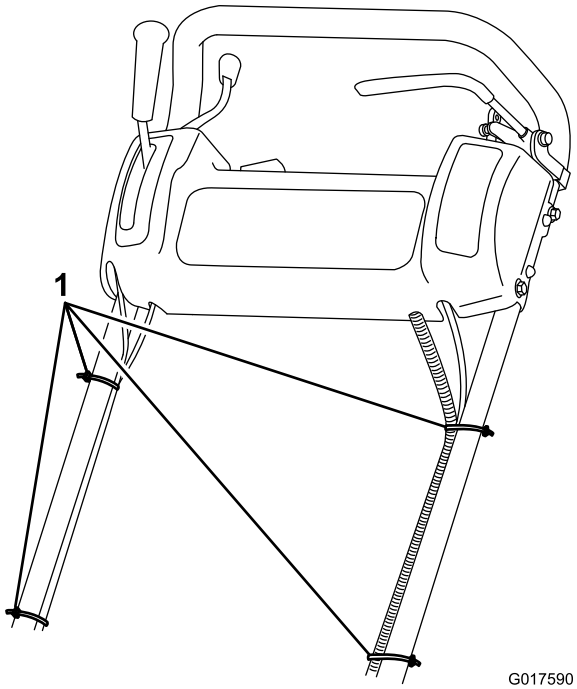

Figure 5

1. Cable ties

Adjusting the Handle

1. Remove the hairpin cotters from the ring pins on each side of the mower (Figure 3).
2. While supporting the handle, remove the ring pins from each side and raise or lower the handle to the desired operating position (Figure 3).
3. Install the ring pins and hairpin cotters.

2

Installing the Kickstand (For GR800 and GR1600)

Parts needed for this procedure:

1	Kickstand assembly
1	Spring

Procedure

Note: The fasteners are shipped loosely installed on the kickstand assembly.

1. **On the GR1600 only**, connect the spring stud to the right hand side of the kickstand (Figure 6) using the bolt, washer, and flange-head nut provided.

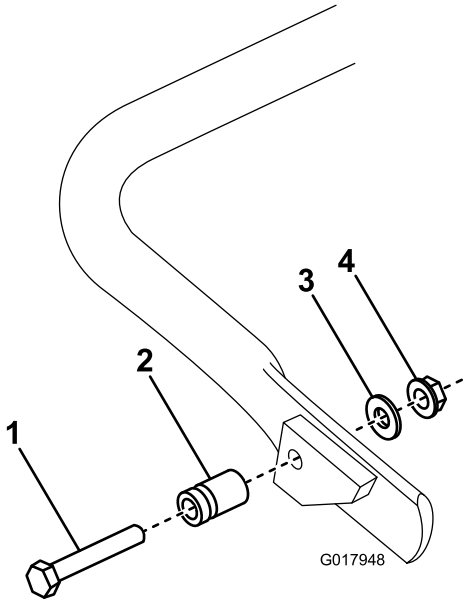

Figure 6

1. Bolt
2. Spring stud
3. Washer
4. Flange-head nut

2. Hook the spring into the hole in the spring bracket and onto the spring stud while aligning the kick stand with the mounting holes in the rear frame (Figure 7).

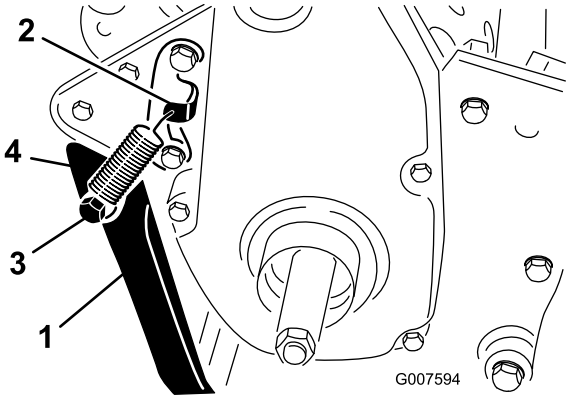

Figure 7

1. Kick stand
2. Spring bracket
3. Spring stud
4. Spring

3. Mount the kick stand to each side of the frame with a bolt, lockwasher, spacer, flat washer and locknut (Figure 7). Position the spacer in the kick stand mounting hole.

3

Installing the Transport Wheel Shafts (For GR1000 and GR1600)

Parts needed for this procedure:

1	Wheel shaft, right
1	Wheel shaft, left

Procedure

1. Push the kick stand down with your foot and pull up on the handle to support the mower on the kick stand.
2. Apply #242 Loctite to the threads of the wheel shafts.
3. Thread the right wheel shaft into the drive pulley on the right side of the machine (Figure 8).

   Note: The right wheel shaft has **left hand threads**.

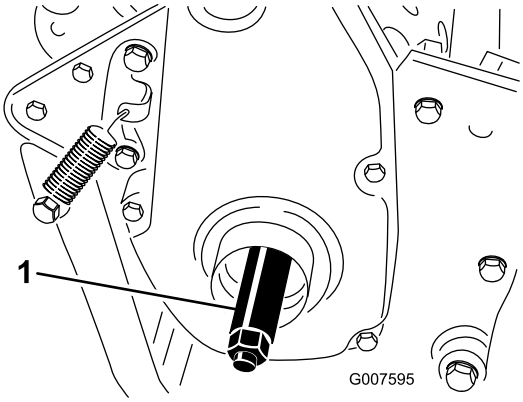

Figure 8

1. Right wheel shaft

4. Torque the shaft to 65 to 75 ft-lb (88 to 101 N-m).
5. Repeat on the left side.

4

Installing the Transport Wheels (Optional)

Parts needed for this procedure:

2	Transport wheels (optional)

Procedure

1. Push the kickstand down with your foot **in the center of the kick stand** and pull up on the machine handle until the kick stand has rotated forward, over center (Figure 9).

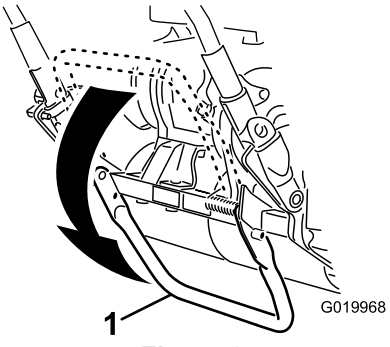

Figure 9

1. Kickstand

2. Press the wheel locking clip toward the center of the wheel onto the wheel shaft (Figure 10).

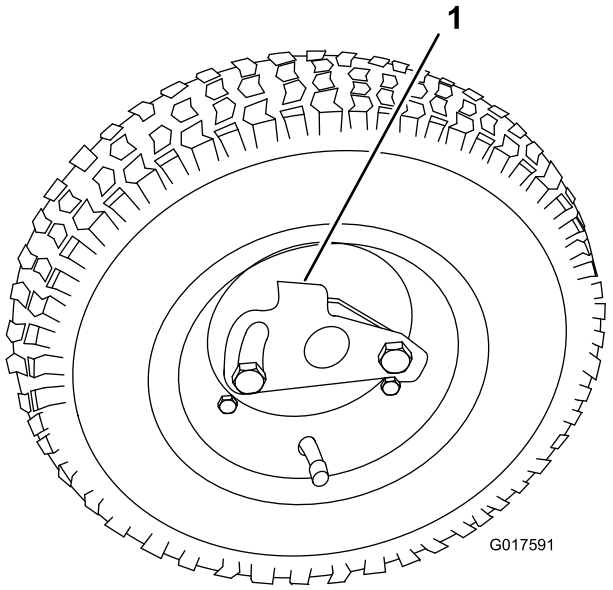

Figure 10

1. Locking clip

3. Rotate the wheel back and forth until it slides completely onto the axle and the locking clip is secured in the groove on the axle shaft.
4. Repeat the procedure on the opposite side of the machine.
5. Inflate the tires to 12 to 15 psi. (574 to 718 Pa).
6. Carefully lower the machine off the kick stand by pushing forward slowly, allowing the kickstand to spring back to its normal position.

5

Adjusting the Cutting Unit

No Parts Required

Procedure

Before operating the machine, complete the following adjustments:

- Leveling the Rear Drum to the Reel (page 31).
- Adjusting the Bedknife to the Reel (page 32).
- Adjusting the Height of Cut (page 32).
- Adjusting the Grass Shield Height (page 33).
- Adjusting the Cut-Off Bar (page 34).

Refer to the Cutting Unit Maintenance section in Maintenance for instructions on performing these procedures.

6

Installing the Grass Basket

Parts needed for this procedure:

1	Grass basket

Procedure

Grasp the basket by the top lip and slide it onto the basket mounting rods (Figure 11).

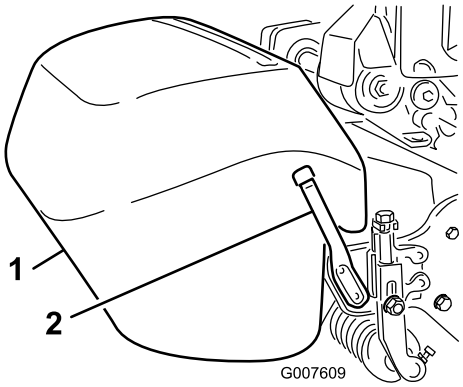

Figure 11

1. Grass basket
2. Basket mounting rod

Note: Model 04056 only—When cutting in higher heights-of-cut, the basket may be lowered by removing each basket mounting rod and installing each on the opposite side of the machine.

Product Overview

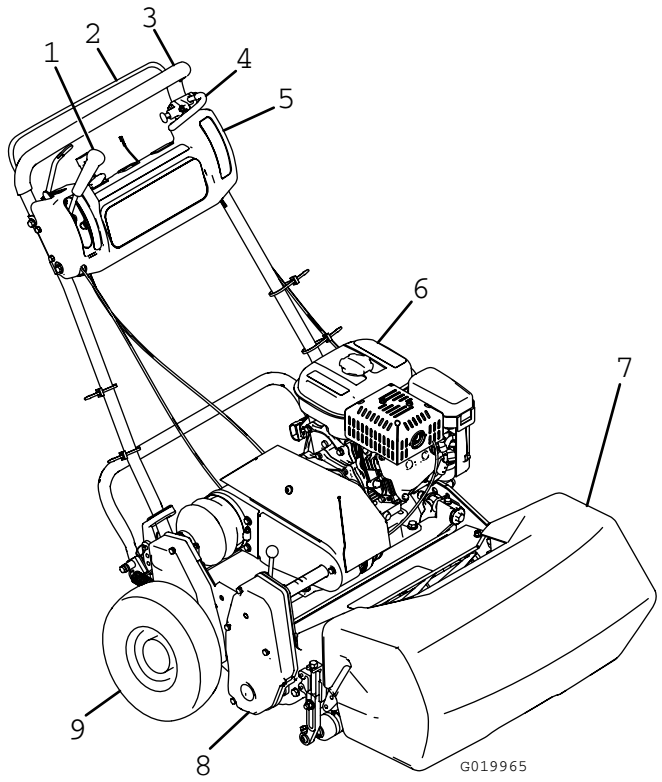

Figure 12

1. Traction & reel drive engagement lever
2. Operator presence control (Optional)
3. Handle
4. Service brake
5. Control panel
6. Fuel tank
7. Grass basket
8. Cutting unit
9. Transport wheels

Controls

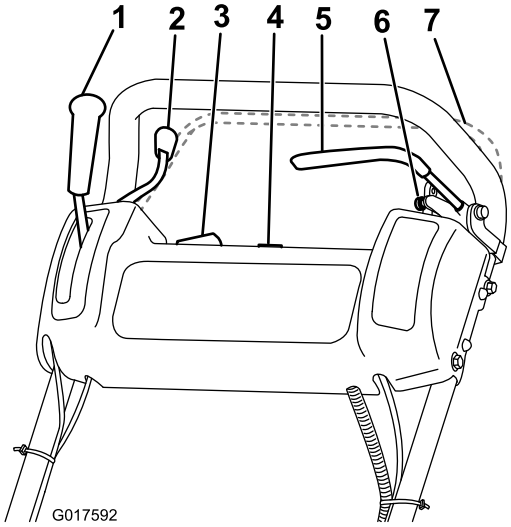

Figure 13

1. Traction drive lever
2. Throttle control
3. On/off switch
4. Hour meter
5. Service brake
6. Parking brake latch
7. Operator presence control (optional)

Throttle Control

The throttle control (Figure 13) is located on the rear right side of the control panel. The lever connects to and operates the throttle linkage to the carburetor. See Specifications (page 15)for engine speed.

Traction Drive Lever

The traction drive lever (Figure 13) is located on the front right side of the control panel. It has two positions: Neutral and Forward. Pushing the lever forward engages the traction drive.

Service Brake

The service brake (Figure 14) is located on the top left front side of the control panel. You can use the brake to slow or stop the machine.

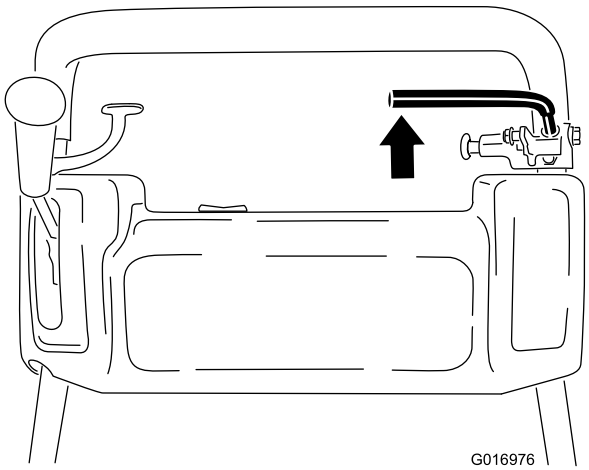

Figure 14

Parking Brake Latch

The parking brake latch (Figure 15) is used in conjunction with the service brake and is located at the base of the service brake. Fully engage the service brake and push the parking brake knob to allow the service brake to rest on the parking brake pin. Engage the service brake to release the parking brake. You must release the brake before the traction drive is engaged.

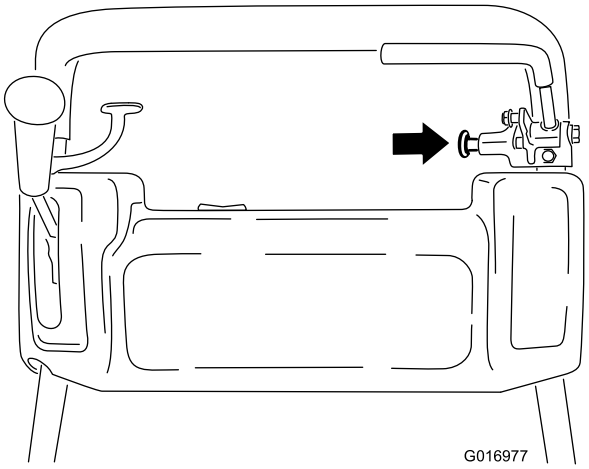

Figure 15

On/Off Switch

The on/off switch (Figure 13) is located on the top of the control panel. Move the switch to the On position to start the engine and the Off position to stop the engine.

Operator Presence Control (Optional)

If equipped, the operator presence control (Figure 13) is located on the rear of the handle. Push the operator presence control against the handle. If equipped, the operator presence control must be engaged before moving the traction drive lever or the engine will stop.

Reel Drive Lever

The reel drive lever (Figure 16) is located on the right front corner of the machine. The lever has two positions: Engage and Disengage. Move the lever outward to engage the reel or inward to disengage the reel.

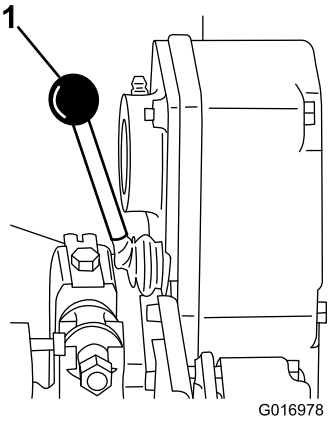

Figure 16

1. Reel drive lever

Choke Lever

The choke lever (Figure 17) is located on the left front of the engine. The lever has two positions: Run and Choke. Move the lever to the half–open position when starting a cold engine. After the engine starts, move the lever to the Run position.

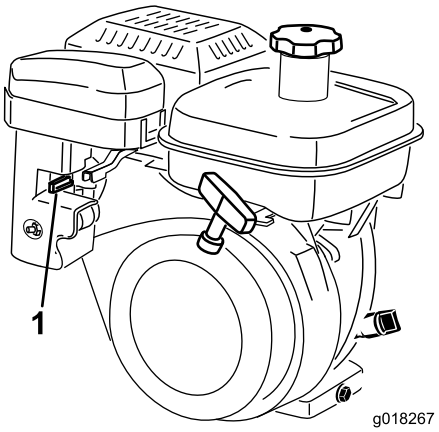

Figure 17

1. Choke lever

Fuel Shut-Off Valve

The fuel shut-off valve (Figure 18) is located on the left front of the engine near the choke lever. The valve has two positions: Closed and Open. Move the lever up to the closed position when storing or transporting the machine. Open the valve before starting the engine by rotating the lever down. The fuel cup is located below the shut off valve.

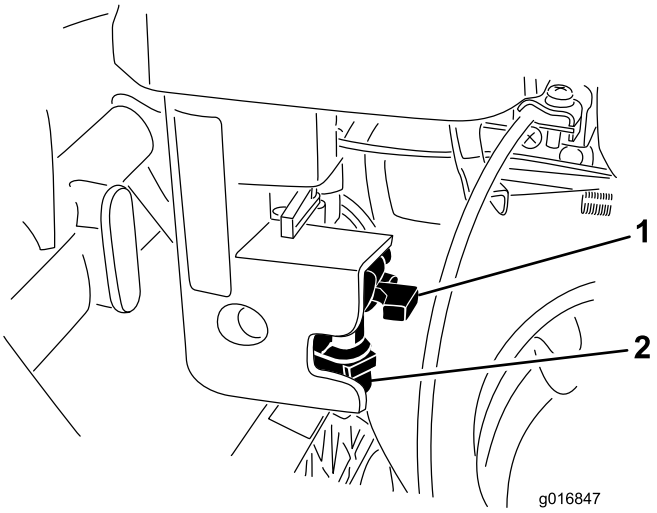

Figure 18

1. Fuel shut-off valve
2. Fuel cup

Recoil Starter

Pull the recoil starter handle (Figure 19) to start the engine.

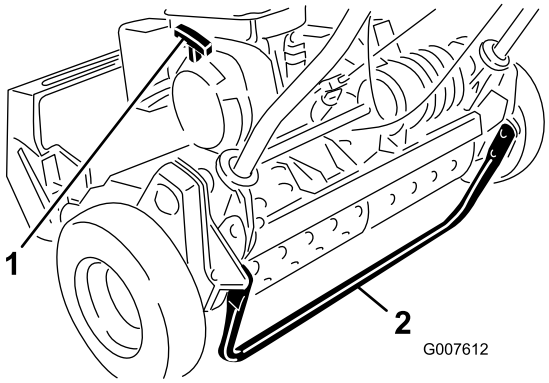

Figure 19

1. Recoil starter
2. Kick stand

Kickstand

The kickstand (Figure 19) is mounted to the rear of the machine and is used to raise the rear of the machine for installation or removal of the transport wheels.

Specifications

	Model 04054	Model 04055	Model 04056
Width	33 inches (84 cm)	36 inches (91 cm)	41 inches (104 cm)
Height	45 inches (114 cm)	45 inches (114 cm)	48 inches (122 cm)
Length with basket	48 inches (122 cm)	48 inches (122 cm)	59 inches (150 cm)
Dry weight (with basket and Wiehle roller; without wheels or grooming reel)	216 lb (97 kg)	220 lb (100 kg)	232 lb (105 kg)
Width of cut	18 inches (46 cm)	21 inches (53 cm)	26 inches (66 cm)
Height of cut	0.063 to 1.25 inches (1.6 mm to 31.8 mm)	0.063 to 1.25 inches (1.6 mm to 31.8 mm)	0.125 to 1.25 inches (3.1 mm to 31.7 mm)
Clip	0.13 inches (3.3 mm)	0.17 inch (4.3 mm)	0.23 inch (5.8 mm)
Engine speed	Low idle –1565 ±150 RPM, High idle – 3375 ±100 RPM	Low idle –1565 ±150 RPM, High idle – 3375 ±100 RPM	Low idle –1565 ±150 RPM, High idle – 3375 ±100 RPM

Attachments/Accessories

A selection of Toro approved attachments and accessories is available for use with the machine to enhance and expand its capabilities. Contact your Authorized Service Dealer or Distributor or go to www.Toro.com for a list of all approved attachments and accessories.

Operation

Note: Determine the left and right sides of the machine from the normal operating position.

Think Safety First

Please carefully read all of the safety instructions and decals in the safety section. Knowing this information could help you or bystanders avoid injury.

Checking the Engine Oil Level

Check the engine oil level before each use or every 8 operating hours, refer to Checking the Engine Oil Level (page 23).

Filling the Fuel Tank

The fuel tank capacity is 0.7 gallons (2.7 l)

- For best results, use only clean, fresh, unleaded gasoline with an octane rating of 87 or higher ((R+M)/2 rating method).
- Oxygenated fuel with up to 10% ethanol or 15% MTBE by volume is acceptable.
- **Do Not** use ethanol blends of gasoline (such as E15 or E85) with more than 10% ethanol by volume. Performance problems and/or engine damage may result which may not be covered under warranty.
- **Do Not** use gasoline containing methanol.
- **Do Not** store fuel either in the fuel tank or fuel containers over the winter unless a fuel stabilizer is used.
- **Do Not** add oil to gasoline.

⚠ WARNING

Gasoline is harmful or fatal if swallowed. Long-term exposure to vapors can cause serious injury and illness.

- **Avoid prolonged breathing of vapors.**
- **Keep face away from nozzle and gas tank or conditioner opening.**
- **Keep gas away from eyes and skin.**

⚠ DANGER

In certain conditions, gasoline is extremely flammable and highly explosive. A fire or explosion from gasoline can burn you and others and can damage property.

- **Fill the fuel tank outdoors, in an open area, when the engine is cold. Wipe up any gasoline that spills.**
- **Do not fill the fuel tank completely full. With the machine level, add gasoline to the fuel tank until level with the top flange of the plastic insert. This empty space in the tank is necessary to allow gasoline to expand.**
- **Never smoke when handling gasoline, and stay away from an open flame or where gasoline fumes may be ignited by a spark.**
- **Store gasoline in an approved container and keep it out of the reach of children. Never buy more than a 30-day supply of gasoline.**
- **Always place gasoline containers on the ground away from your vehicle before filling.**
- **Do not fill gasoline containers inside a vehicle or on a truck or trailer bed because interior carpets or plastic truck bed liners may insulate the container and slow the loss of any static charge.**
- **When practical, remove gas-powered equipment from the truck or trailer and refuel the equipment with its wheels on the ground.**
- **If this is not possible, then refuel such equipment on a truck or trailer from a portable container, rather than from a gasoline dispenser nozzle.**
- **If a gasoline dispenser nozzle must be used, keep the nozzle in contact with the rim of the fuel tank or container opening at all times until fueling is complete.**

1. Clean around the fuel tank cap and remove the cap from the tank (Figure 20). Using unleaded gasoline, fill the fuel tank no higher than to the bottom of the filter screen. Do not overfill.

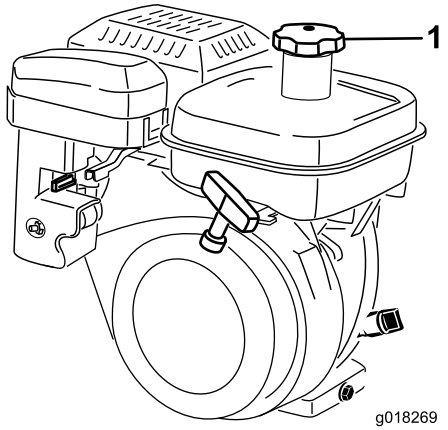

Figure 20

1. Fuel tank cap

2. Install the fuel tank cap and wipe up any spilled gasoline.

Checking the Interlock Switch Operation

⚠ CAUTION

If safety interlock switches are disconnected or damaged the machine could operate unexpectedly causing personal injury.

- **Do not tamper with the interlock switches.**
- **Check the operation of the interlock switches daily and replace any damaged switches before operating the machine.**

1. Push the kickstand down with your foot and pull up and back on the handle to raise the wheels off of the ground.
2. Place the traction lever into the Engage position and the engine controls in the starting position.
3. Attempt to start the engine.

   The engine should not start. If the engine starts, the interlock switch needs service. Correct the problem before operating. Refer to Servicing the Interlock Switch (page 26).
4. Carefully lift up on the handle to release the kick stand.

Starting and Stopping the Engine

Note: For illustrations and descriptions of the controls referenced in this section, refer to theControls (page 13) section.

Starting the Engine

Note: Make sure the spark plug wire is installed on the spark plug.

1. Make sure the traction and reel drive levers are in the Disengaged position.

   Note: The engine will not start if the traction lever is in the engaged position.

2. Move the on/off switch to the On position.
3. Move the throttle control to the Fast position.
4. Open the fuel shut-off valve on the engine.
5. Move the choke lever to the half-open position when starting a cold engine. The choke may not be required when starting a warm engine.
6. Pull the recoil starter handle out until positive engagement results, then pull it vigorously to start the engine. Open the choke as the engine warms up.

   Important: Do not pull the recoil rope to its limit or let go of the starter handle when the rope is pulled out because the rope may break or recoil assembly may be damaged.

Stopping the Engine

1. Move the traction and reel drive controls to the Disengaged position, the throttle control to Slow, and the on/off switch to Off.
2. Pull the molded spark plug wire off of the spark plug to prevent the possibility of accidental starting before storing the machine.
3. Close the fuel shut-off valve before storing or transporting the mower in a vehicle.

Driving the Machine in Transport

1. If the machine is equipped with the optional transport wheels, push the kick stand down with your foot and pull up on the handle to raise the rear of the mower and install the transport wheels.
2. To release the kickstand, pull up on the handle, push the mower forward, and then lower the rear of the mower onto the transport wheels.
3. Ensure that the traction and reel drive controls are in the Disengaged position and start the engine.
4. Set the throttle control to Slow, raise the front of the machine up slightly, gradually engage the traction drive and slowly increase the engine speed.
5. Adjust the throttle to operate the mower at the desired ground speed and transport the mower to the desired destination.
6. To stop the machine, move the traction control lever to the Disengage position, the throttle to the Slow position, and stop the engine by moving the kill switch to the Off position.

Preparing to Mow

1. If the machine is equipped with the optional transport wheels, push the kickstand down with your foot and pull up and back on the handle to raise the wheels off of the ground.
2. Push the locking clips on the wheels out of the grooves in the shafts.
3. Remove the transport wheels.
4. Carefully lower the machine off the kickstand.

Prior to Mowing

Ensure that the mower is carefully adjusted and is set evenly on both sides of the reel. For best performance and battery life, set the bed knife to have a light contact with the reel. Improper mower adjustment is magnified in the appearance of the clipped turf. Remove all foreign objects from the turf prior to mowing. Make sure everyone, especially children and pets, are clear of the work area.

Method of Mowing

- Mow a green in a straight back and forth direction, across the green.
- Avoid circular mowing or turning the mower on a green because scuffing may occur. Turn the mower off of the green by raising the cutting reel (pushing the handle down) and turning on the traction drum.
- Mow at a normal walking pace. Fast speed saves very little time and will result in an inferior mowing job.

Control Operation

Proper use of the machine provides the smoothest turf cutting available.

Important: Grass clippings act as a lubricant when mowing. Excessive operation of the cutting unit with the absence of grass clippings can damage the cutting unit.

1. Start the engine, set the throttle at a reduced speed, push down on the handle to raise the cutting unit,

move the traction lever to the Engaged position, and transport the mower onto the collar of the green.

2. Move the traction lever to the Disengaged position and move the reel drive lever to the Engaged position.
3. Move the traction lever to the Engaged position, increase the throttle speed until the mower is traveling at the desired ground speed, drive the mower onto the green, lower the front of the mower, and commence operation.
4. When finished mowing, drive off of the green, move the traction control lever to the Disengage position, stop the engine and push the reel drive lever into the Disengage position.
5. Empty the grass basket of clippings, install the grass basket, and commence transport operation.

Maintenance

Note: Determine the left and right sides of the machine from the normal operating position.

Recommended Maintenance Schedule(s)

Maintenance Service Interval	Maintenance Procedure
After the first 20 hours	• Change the engine oil. • Clean the fuel filter and cup.
Before each use or daily	• Check the interlock switch operation. • Check the engine oil level.
Every 25 hours	• Grease the machine. (Grease the fittings immediately after every washing regardless of the interval listed.)
Every 50 hours	• Change the engine oil. (Every 25 hours in dusty or dirty conditions) • Clean and oil the air cleaner foam element. (Every 25 hours in dirty or dusty conditions)
Every 100 hours	• Replace the paper air filter element. (Every 50 hours in dirty or dusty conditions) • Check the spark plug. • Clean the fuel filter and cup.
Every 500 hours	• Check intake and exhaust valves. Adjust as necessary. • Clean the carburetor.
Every 1,000 hours	• replace the fuel line. • Check the transmission drive belts. • Check the transmission bearings.

Important: **Refer to your *Engine Operator's Manual* for additional maintenance procedures.**

Daily Maintenance Checklist

Important: Duplicate this page for routine use.

Maintenance Check Item	For the week of:						
	Mon.	Tues.	Wed.	Thurs.	Fri.	Sat.	Sun.
Check the safety interlock operation.							
Check the parking brake operation.							
Check the fuel level.							
Check the engine oil level.							
Check the air filter.							
Clean the engine cooling fins.							
Check for unusual engine noises.							
Check for unusual operating noises.							
Check the reel-to-bedknife adjustment.							
Check the height-of-cut adjustment.							
Grease all fittings.							
Touch up damaged paint.							

Notation for Areas of Concern

Inspection performed by:		
Item	**Date**	**Information**

Lubrication

Greasing the Machine

Service Interval: Every 25 hours

Lubricate the 13 grease fittings on the mower using a No. 2 multipurpose lithium base grease. A hand operated grease gun is recommended for best results.

The grease fitting locations are as follows:

- 2 on the front roller (Figure 21)
- 2 on the reel bearings (Figure 21)
- 2 on the drum axles (Figure 22)
- 3 on the differential (Figure 22)
- 2 on the reel countershaft bearings (Figure 23)
- 2 on the belt idler pivots (Figure 24).

1. Wipe each grease fitting with a clean rag.
2. Pump grease until clean grease come out from the joint being greased.

   Important: Do not apply too much pressure or grease seals will become permanently damaged.
3. Wipe off any excess grease.

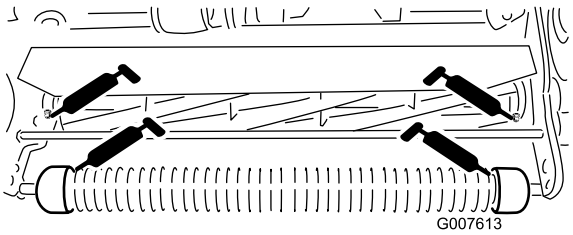

Figure 21

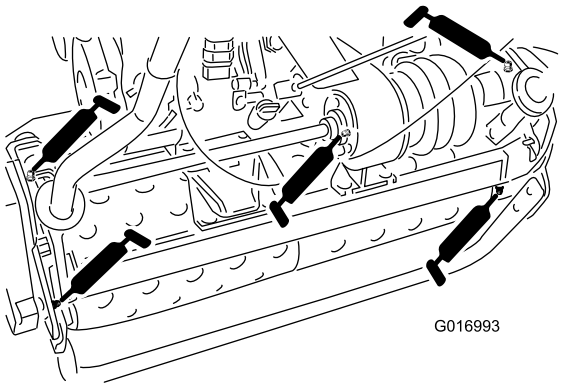

Figure 22

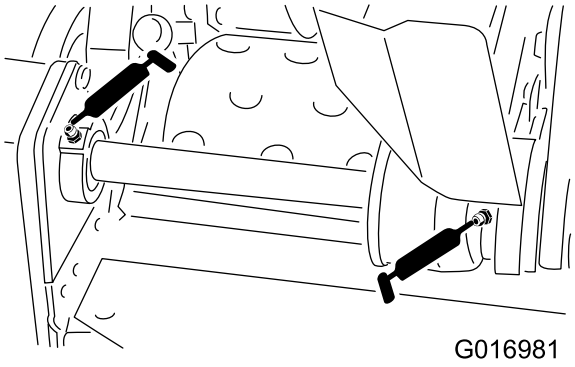

Figure 23

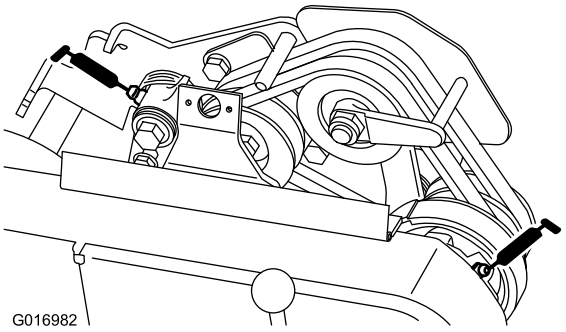

Figure 24

Engine Maintenance

Servicing the Engine Oil

Service Interval: After the first 20 hours—Change the engine oil.

Before each use or daily—Check the engine oil level.

Every 50 hours—Change the engine oil. (Every 25 hours in dusty or dirty conditions)

The crankcase must be filled with approximately 21 fluid ounces of proper viscosity oil before staring. The engine uses any high-quality oil having the American Petroleum Institute - APl - "service classification" SF, SG, SH or SJ. Oil viscosity - weight - must be selected according to ambient temperature. Figure 25 illustrates the temperature/viscosity recommendations.

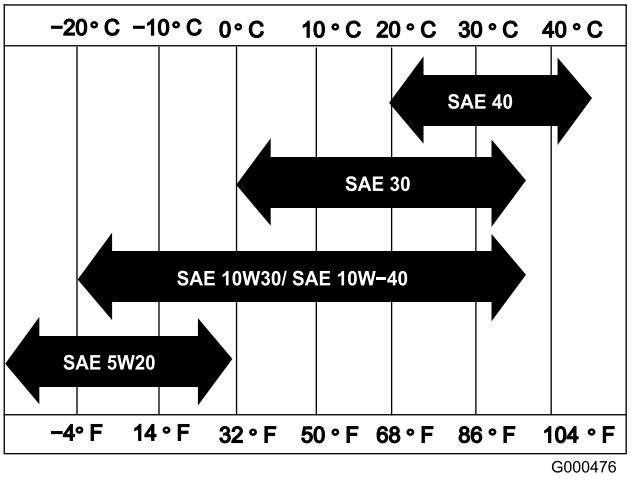

Figure 25

Note: Using multi-grade oils (5W-20, 10W-30, and 10W-40) will increase oil consumption. Check the oil level more frequently when using them.

Checking the Engine Oil Level

1. Position the mower so that the engine is level and clean around the oil level gauge (Figure 26).

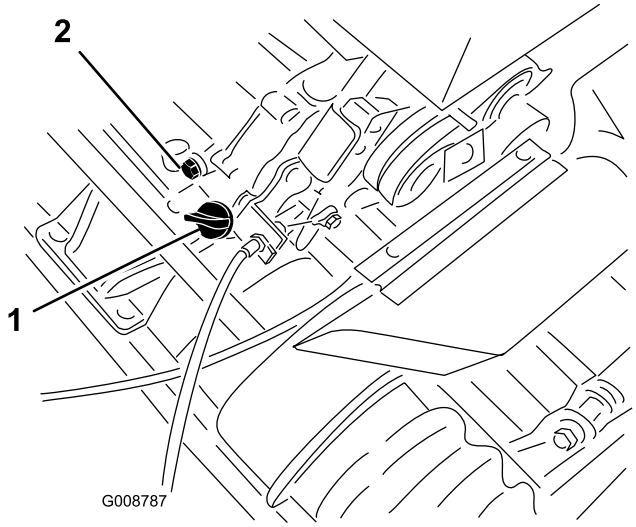

Figure 26

1. Oil level gauge
2. Drain plug

2. Remove the oil level gauge by rotating it counterclockwise.
3. Wipe the oil level gauge clean and insert it into the filler port. Do not screw it into the port.
4. Remove the gauge and check the level of the oil.
5. If the level is low, add only enough oil to raise the level until it is between the hatch marks on the gauge (Figure 27). **Do not overfill.**

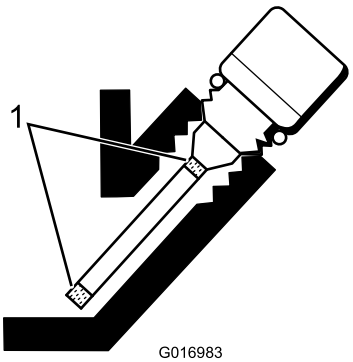

Figure 27

1. Hatch marks

6. Install the oil level gauge and wipe up any spilled oil.

Changing the Engine Oil

1. Start and run the engine for a few minutes to warm the engine oil.
2. Place a drain pan at the rear of machine, under the drain plug (Figure 26).
3. Remove the drain plug.
4. Push down on the handle to tip the mower and the engine backward, allowing more oil to run into the drain pan.

5. Install the drain plug and refill the crankcase with the proper oil.

Servicing the Air Cleaner

Service Interval: Every 50 hours—Clean and oil the air cleaner foam element. (Every 25 hours in dirty or dusty conditions)

Every 100 hours—Replace the paper air filter element. (Every 50 hours in dirty or dusty conditions)

Important: Service the air cleaner more often in dirty or dusty conditions

1. Make sure the wire is off of the spark plug.
2. Remove the wing nut securing the air cleaner cover and remove the cover (Figure 28).

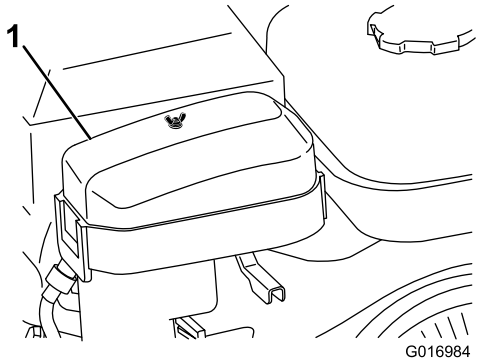

Figure 28

1. Air cleaner cover

3. Clean the cover thoroughly.
4. If the foam element is dirty, remove it from the paper element (Figure 29) and clean it thoroughly, as follows:
   A. Wash the foam element in a solution of liquid soap and warm water. Squeeze it to remove dirt, but do not twist it because the foam may tear.
   B. Dry the foam element by wrapping it in a clean rag. Squeeze the rag and foam element to dry it, but do not twist it.
   C. Saturate the foam element with clean engine oil. Squeeze the element to remove excess oil and to distribute the oil thoroughly. An oil damp element is desirable.

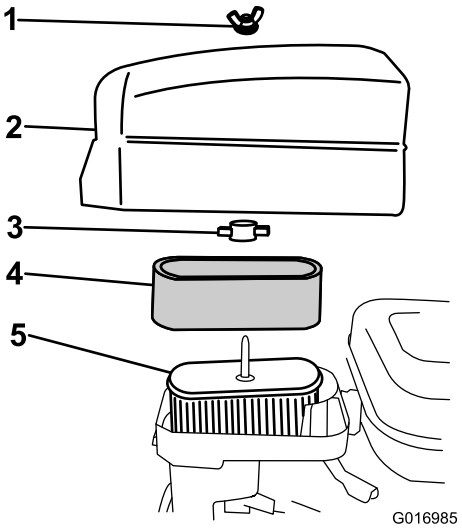

Figure 29

1. Wing nut
2. Air cleaner cover
3. Plastic wing nut
4. Foam element
5. Paper element

5. Check the condition of the paper element. Clean it by gently tapping or replace it as required.

   Important: Do not use compressed air to clean the paper element.

6. Install the foam element, paper element, and air cleaner cover.

   Important: Do not operate the engine without the air cleaner element because extreme engine wear and damage will likely result.

Replacing the Spark Plug

Service Interval: Every 100 hours

Use an NGK BR6HS spark plug or equivalent. The correct air gap is 0.024-0.028 inches (0.6-0.7 mm).

1. Pull the molded wire off of the spark plug (Figure 30).

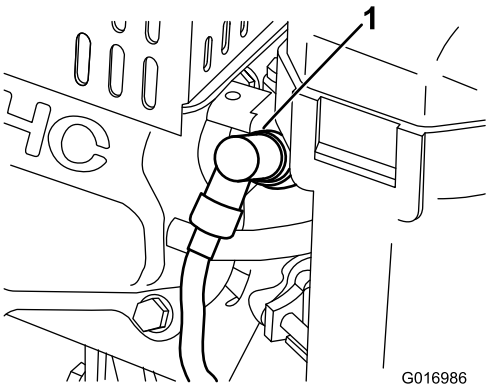

Figure 30

1. Spark plug wire

2. Clean around the spark plug and remove it from the cylinder head.

   Important: Replace a cracked, fouled, or dirty spark plug. Do not sand blast, scrape, or clean electrodes because engine damage could result from grit entering the cylinder.

3. Ensure that the air gap is correct (Figure 31).

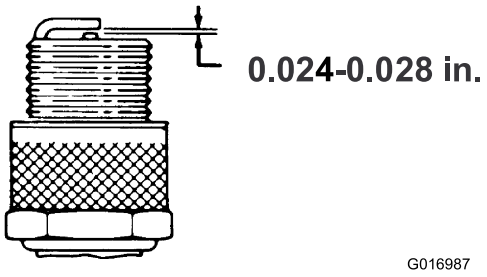

Figure 31

4. Install the correctly gapped spark plug and tighten it to 17 ft.-lb (23 N-m).
5. Install the spark plug wire on the spark plug.

Fuel System Maintenance

Cleaning the Fuel Filter

Service Interval: After the first 20 hours

Every 100 hours

1. Close the fuel shut–off valve and unscrew the bowl from the filter body (Figure 32).

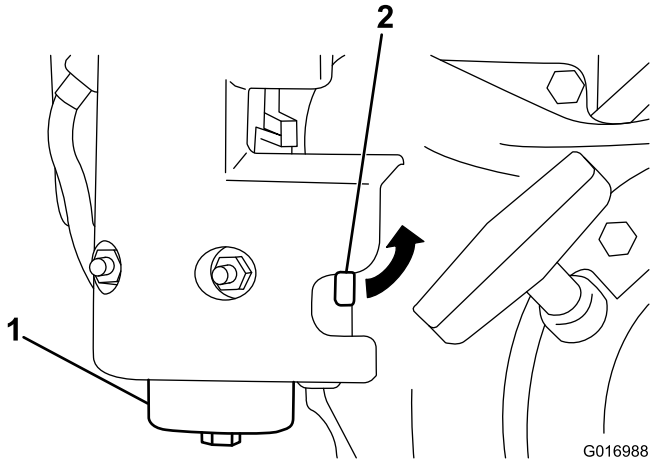

Figure 32

1. Bowl
2. Fuel shut–off valve

2. Clean the bowl and filter in clean gasoline and install it.

Electrical System Maintenance

Servicing the Interlock Switch

Use the following procedure if the switch needs adjustment or replacement.

1. Make sure the engine is off and the traction lever is disengaged and resting against the neutral stop (Figure 33).

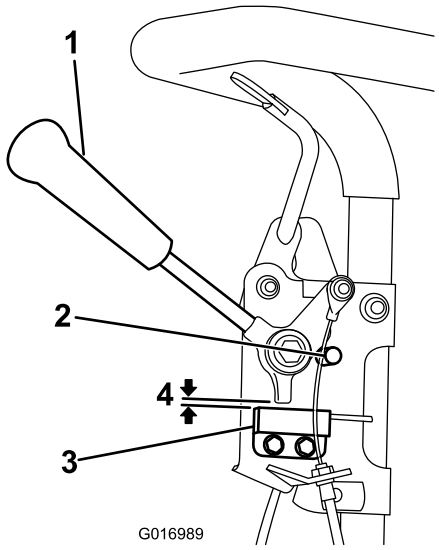

Figure 33

1. Traction lever
2. Neutral stop
3. Interlock switch
4. .032" Gap

2. Loosen the interlock switch mounting fasteners (Figure 33).
3. Place a .032" thick shim between the traction lever and the interlock switch (Figure 33).
4. Tighten the interlock switch mounting fasteners. Recheck the gap. The traction lever must not contact the switch.
5. Engage the traction lever and verify that the switch loses continuity. Replace if required.

Brake Maintenance

Adjusting the Service/Parking Brake

If the service/parking brake slips when operated, an adjustment is required.

1. Engage the service brake, push in on the parking brake knob and allow the service brake to rest on the parking brake pin (Figure 34)

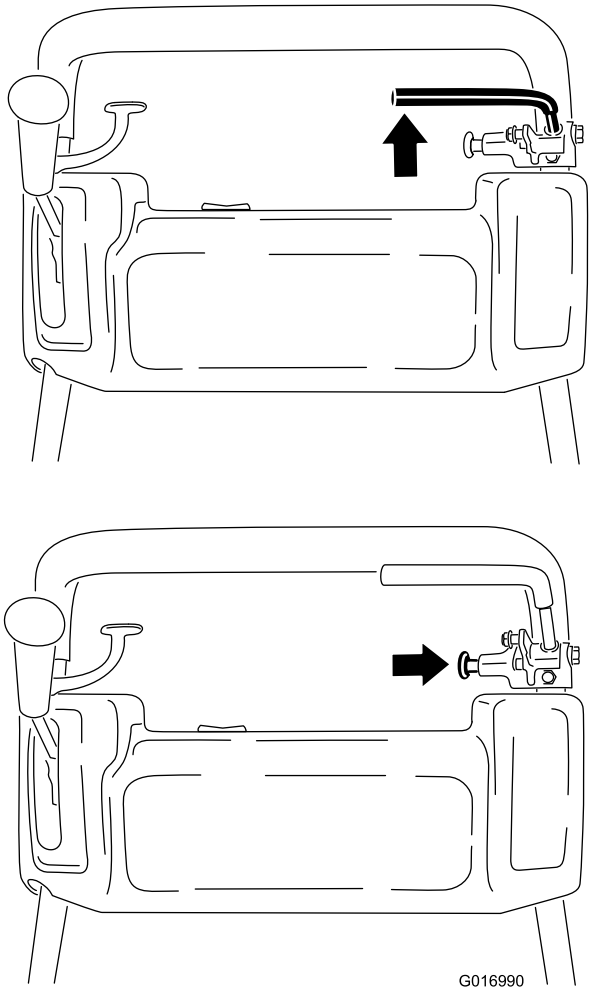

Figure 34

2. Using a spring scale, press rearward on the service brake lever (Figure 35). The parking brake should release when a force of 30 to 40 lbs (13.5 to 18 kg) is attained. If the parking brake releases before 30 to 40 lbs (13.5 to 18 kg) of force is attained, an adjustment to the brake cable is required. Proceed to step 3.

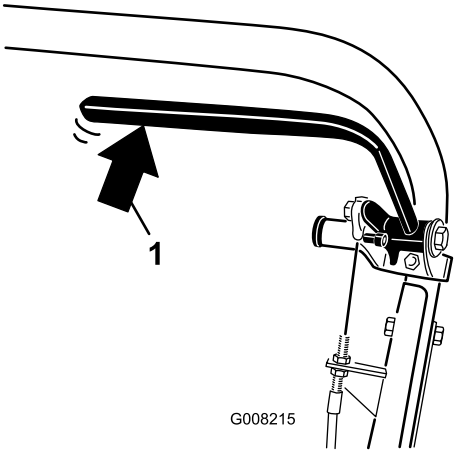

Figure 35

1. Rear pressure on service brake lever

3. Loosen the retainer securing the V-belt cover and pivot the cover open (Figure 36).

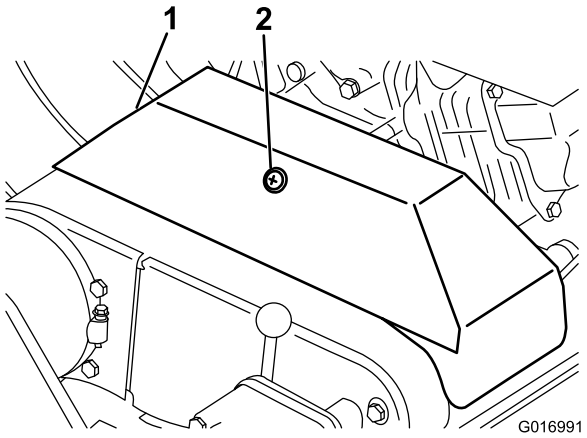

Figure 36

1. V–belt cover 2. Retainer

4. To adjust the brake cable tension, proceed as follows.
   - To decrease the cable tension, loosen the front cable jam nut and tighten the rear jam nut (Figure 37). Repeat steps 1 and 2 and readjust if required.
   - To increase the cable tension, tighten the front cable jam nut and loosen the rear jam nut (Figure 37). Repeat steps 1 and 2 and readjust if required.

   Note: The adjustment can be performed on the cable at the jam nut brackets by the control panel or at the bracket at the base of the engine.

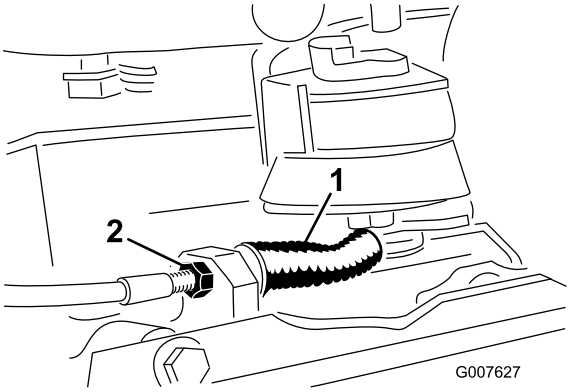

Figure 37

1. Service/Parking brake cable 2. Front jam nut

5. Close the cover and secure the retainer.

Belt Maintenance

Adjusting the Belts

Ensure that the belts are properly tensioned to ensure proper operation of the machine and unnecessary wear. Check the belts frequently.

Adjusting the Reel Drive Belt

1. Remove the belt cover mounting fasteners and belt cover to expose the belt (Figure 38).

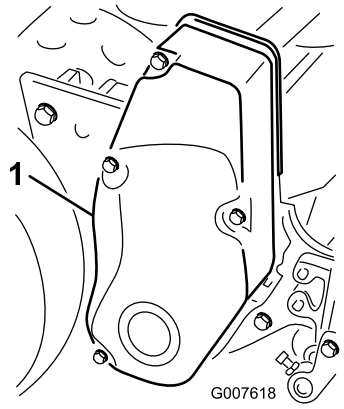

Figure 38

1. Belt cover

2. Check the tension by pressing the belt at mid span of the pulleys (Figure 39) with 4 to 5 lbs (18–22 N) of force. The belt should deflect 1/4 inch (6 mm).

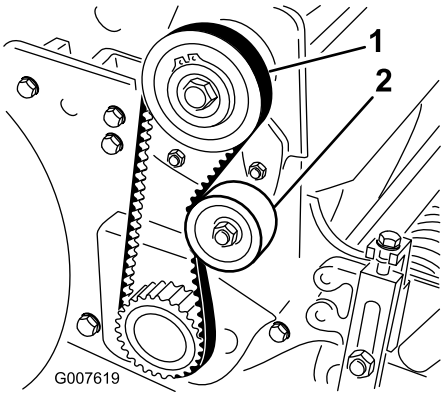

Figure 39

1. Reel drive belt 2. Idler pulley

3. Complete the following to adjust the belt tension:
   A. Loosen the idler pulley mounting nut and pivot the idler pulley clockwise against the backside of the belt until you attain the desired belt tension (Figure 39).

      Important: Do not over tension the belt.

   B. Tighten the nut to lock the adjustment.
4. Install the belt cover by placing it in position.
5. While maintaining a slight gap between the cover seal and the side plate, install each mounting bolt until the threads engage in the insert. The gap allows visual alignment of the bolts to the threaded inserts.
6. After all bolts are installed, tighten them until the stand-offs inside the cover contact the side plate. Do not overtighten.

Adjusting the Traction Drive Belt

1. Remove the belt cover mounting fasteners and the belt cover to expose the belt (Figure 40).

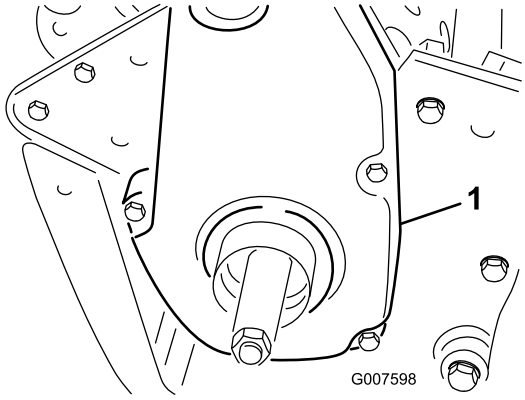

Figure 40

1. Traction drive belt cover

2. Check the tension by pressing the belt at mid span of the pulleys (Figure 41) with 4 to 5 lbs (18–22 N) of force. The belt should deflect 1/4 inch (6 mm).

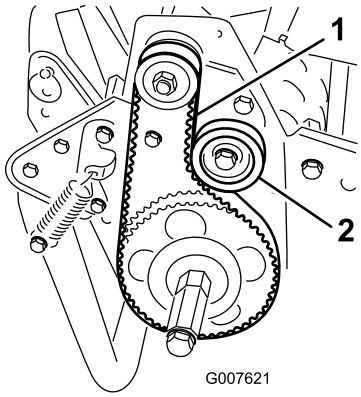

Figure 41

1. Traction drive belt 2. Idler pulley

3. Complete the following to adjust the belt tension:
   A. Loosen the idler pulley mounting nut and pivot the idler pulley clockwise against the backside of the belt until the desired belt tension is attained (Figure 41).

      Important: Do not over tension the belt.

   B. Tighten the nut to lock the adjustment.
4. Install the belt cover by placing it in position.

5. While maintaining a slight gap between the cover seal and the side plate, install each mounting bolt until the threads engage in the insert. The gap allows visual alignment of the bolts to the threaded inserts.
6. After all bolts are installed, tighten them until the stand-offs inside the cover contact the side plate. Do not overtighten.

Adjusting the Differential Belt

1. Remove the bolts securing the front and rear sections of the differential cover to the differential housing and slide the cover sections away to expose the belt.
2. Check the tension by pressing the belt at mid span of the pulleys (Figure 42) with 5 to 6 lb (22–26 N) of force. The belt should deflect 1/4 inch (6 mm).

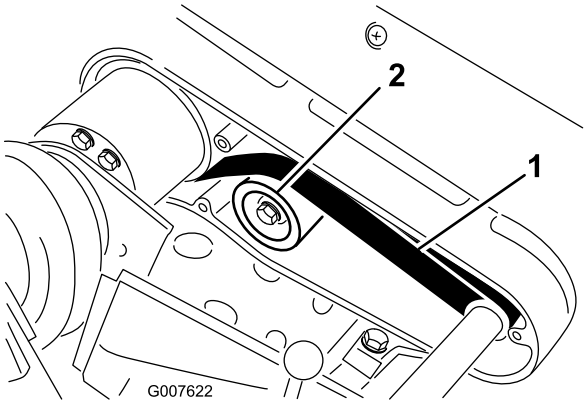

Figure 42

1. Differential belt
2. Idler pulley

3. Complete the following to adjust the belt tension:
   A. Loosen the idler pulley mounting nut and pivot the idler pulley clockwise against the backside of the belt until the desired belt tension is attained (Figure 42).

      Important: Do not over tension the belt.

   B. Tighten the nut to lock the adjustment.
4. Install the belt cover by placing it in position.
5. While maintaining a slight gap between the cover seal and the side plate, install each mounting bolt until the threads engage in the insert. The gap allows visual alignment of the bolts to the threaded inserts.
6. After all bolts are installed, tighten them until the stand-offs inside the cover contact the side plate. Do not overtighten.

Adjusting the Primary V-Belts

1. To adjust the belt tension on primary V-belts, first check the adjustment of the traction control. Refer to Adjusting the Traction Control (page 31). If you are unable to attain the 4 to 5 lb (18–22 N) force required in adjusting the traction control, proceed to the next step.
2. Loosen the retainer securing the V-belt cover and pivot the cover open (Figure 43).

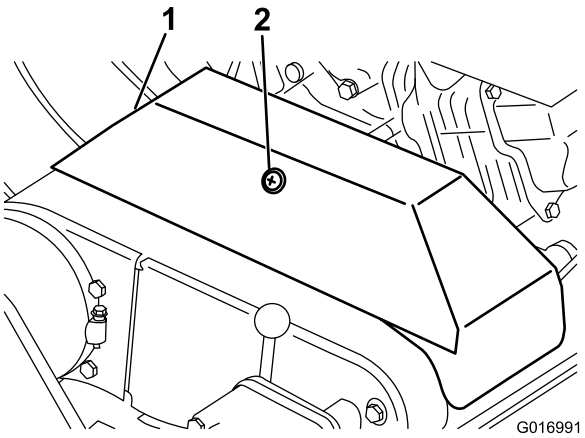

Figure 43

1. V-belt cover
2. Retainer

3. To increase belt tension, loosen the engine mounting bolts and move the engine backwards in the slots.

   Important: Do not over tension the belt.

4. Tighten the mounting bolts.

   Note: The distance between the centers of the driver and the driven pulleys should be approximately 5.06 inches (12.85 cm) after new V-belts are installed.
5. After tensioning the primary V-belts, check the alignment of the engine output shaft pulley and the countershaft pulley with a straight edge.
6. If the pulleys are misaligned, loosen the screws securing the engine mounting base to the mower frame and slide the engine from side to side until the pulleys are aligned within 0.030 inch (0.07 cm).

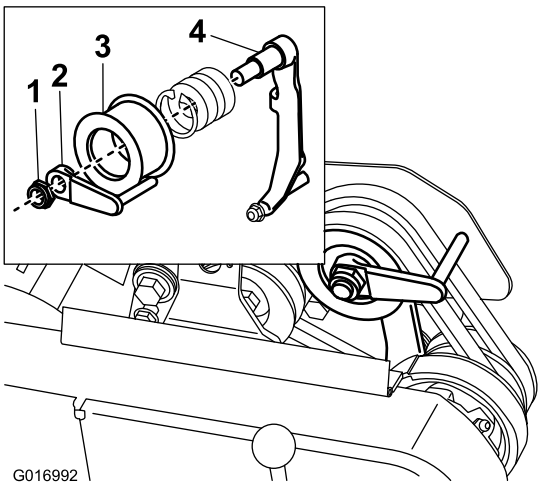

Figure 44

1. Locknut
2. Belt guide
3. Idler pulley
4. Idler arm

7. Tighten the mounting screws and check the alignment.

8. To push or pull the machine easier without starting the engine, adjust the belt guide (Figure 44, inset) as follows:
   A. Engage the clutch.
   B. Loosen the locknut securing the idler pulley and belt guide to the idler arm.
   C. Rotate the belt guide clockwise until a gap of approximately 0.06 inch (0.15 cm) is obtained between the guide finger and the backside of the drive belts.
   D. Tighten the locknut securing the idler pulley and belt guide to the idler arm.
9. Close the cover and secure the retainer.

Replacing the Differential Belt

1. Remove the bolts securing the traction drive and reel drive belt covers to the right side plate and remove the belt covers.
2. Loosen the idler pulley mounting nut on each idler pulley and pivot each idler pulley counterclockwise away from the backside of each belt to release the belt tension.
3. Remove the belts.
4. Remove the bolts securing the front and rear sections of the differential cover to the differential housing and slide the cover sections away to expose the belt (Figure 45).

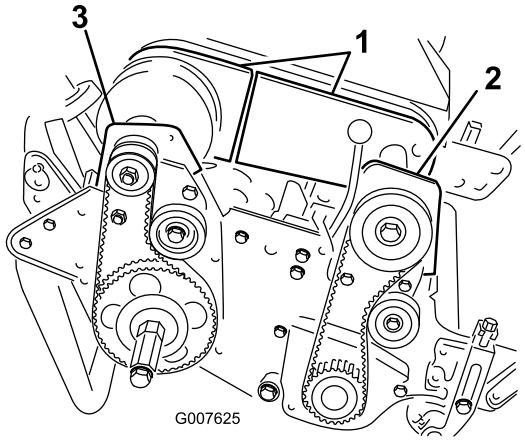

Figure 45

1. Differential cover sections
2. Front clutch housing
3. Right rear bearing housing

5. Loosen the idler pulley mounting nut on the differential idler pulley and pivot the idler pulley counterclockwise away from the backside of the belt to release the belt tension.
6. Remove the 2 bolts and locknuts securing the front clutch housing to the side plate (Figure 45).
7. Rotate the housing 180° so the bottom of the housing points upward.
8. Remove the 2 bolts and locknuts securing the right rear bearing housing to the side plate (Figure 45).
9. Rotate the housing 180° so the bottom of the housing points upward. Remove the old belt.
10. Slide the new belt over the rotated housing covers, the differential cover sections, and onto the differential pulleys.
11. Ensure that the idler pulley is positioned against the backside of the belt.
12. Rotate both housings back into the upright position and secure them to the side plate with the bolts and nuts previously removed.
13. Adjust the differential belt tension; refer to Adjusting the Differential Belt (page 29).
14. Adjust the belt tension on the traction drive and reel drive belts; refer to Adjusting the Traction Drive Belt (page 28), and Adjusting the Reel Drive Belt (page 28).
15. Install the differential, traction drive, and reel drive covers.

Controls System Maintenance

Adjusting the Traction Control

If the traction control does not engage or it slips during operation, an adjustment is required.

1. Move the traction control to the Disengaged position.
2. Loosen the retainer securing the V-belt cover and pivot the cover open (Figure 43).
3. To increase the cable tension, loosen the front cable jam nut and tighten the back cable jam nut (Figure 46) until a force of 7 to 9 lbs (3 to 4 kg) is required to engage the traction control. Measure the force at the control knob.

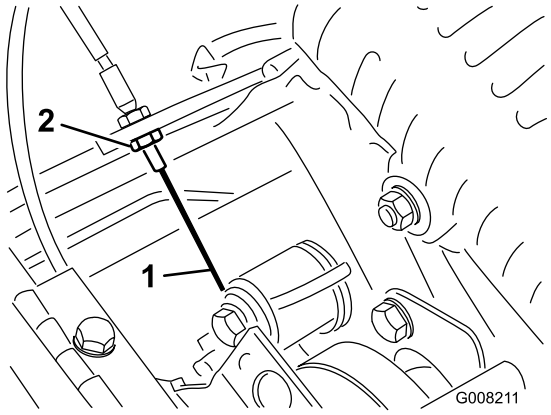

Figure 46

1. Traction cable
2. Front jam nut

4. Tighten the front cable jam nut.
5. Close the cover and secure the retainer.
6. Check the traction control operation.

Cutting Unit Maintenance

Leveling the Rear Drum to the Reel

1. Position the machine on a flat, level surface, preferably a precision steel work plate.
2. Place a 1/4 x 1 inch (0.6 x 2.5 cm) flat steel strip, approximately 29 inches (73.6 cm) long, under the reel blades and against the front edge of the bedknife to prevent the bedbar from resting on the work surface.
3. Raise the front roller so only the rear drum and reel are on the surface.
4. Firmly press down on the machine above the reel so all reel blades contact the steel strip.
5. While pressing down on the reel, slide a feeler gauge under one end of the drum, then check the other end of the drum.

   If there is a gap between the drum and the work surface, greater than 0.010 inch (.025 cm), on either end, adjust the drum (proceed to step 6). If the gap is less than 0.010 inch (.025 cm) no adjustment is required.
6. Remove the rear belt cover from the right side of the machine (Figure 47).

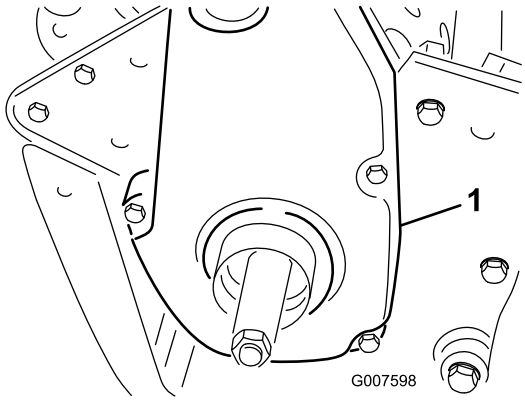

Figure 47

1. Traction drive belt cover

7. Rotate the driven pulley until the holes align with the 4 roller bearing flange screws (Figure 48).

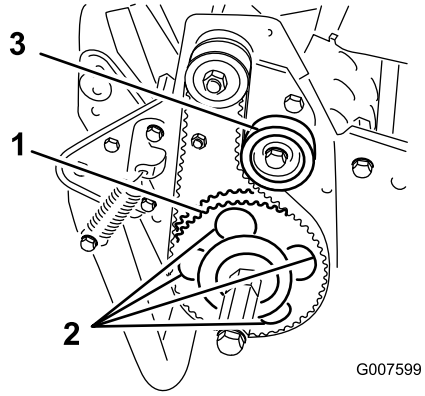

Figure 48

1. Driven pulley
2. 4 holes
3. Idler Pulley

8. Loosen the 4 roller bearing screws and the screw securing the idler pulley.
9. Raise or lower the right side of the roller assembly until the gap is less than 0.010 inch (.025 cm).
10. Tighten the roller bearing screws.
11. Adjust the belt tension and tighten the idler pulley mounting screw (Figure 48).

Adjusting the Bedknife to the Reel

The bedknife to reel adjustment is accomplished by loosening or tightening the bedbar adjusting screws, located on top of the mower.

1. Position the machine on a flat, level work surface.
2. Ensure that the reel contact is removed by turning the bedbar adjusting screws counterclockwise (Figure 49).

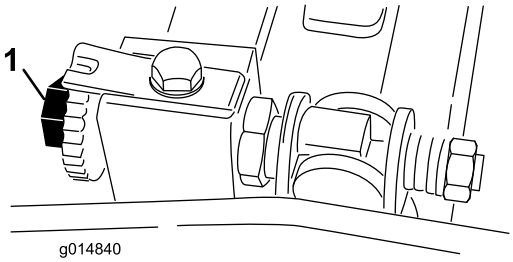

Figure 49

1. Bedbar adjusting screw

3. Tilt the mower back on the handle to expose the bedknife and reel.
4. On one end of the front side of the reel, insert a long strip of newspaper between the reel and bedknife (Figure 50). While slowly rotating the reel forward, turn the bedbar adjusting screw clockwise (on the same end of the reel, one click at a time, until the paper is pinched lightly, when inserted from the front, parallel to the bedknife, which results in a slight drag when paper is pulled (Figure 49).

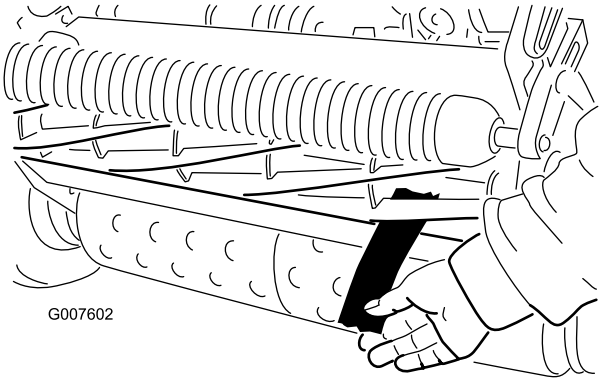

Figure 50

Note: Each time the adjusting screw is rotated one click clockwise, the bedknife moves 0.0007 inch (0.0017 cm) closer to the reel. Do not overtighten the adjusting screws.

5. Check for light contact at the other end of the reel using paper and adjust it as required.
6. After the adjustment is accomplished, check to see if the reel can pinch paper when inserted from the front and cut paper when inserted at a right angle to the bedknife (Figure 50). It should be possible to cut paper with minimum contact between the bedknife and the reel blades. Should excessive reel drag be evident (more than 7 inch-lb (0.79 N-m)), either backlap or grind the cutting unit to achieve the sharp edges needed for precision cutting; refer to the *Toro Reel Sharpening Manual*.

Adjusting the Height of Cut

1. Verify that the rear roller is level and that the bedknife to reel contact is correct. Tip the mower back on the handle to expose the front and rear rollers and the bedknife.
2. Loosen the locknuts securing the height-of-cut arms to the height-of-cut brackets (Figure 51).

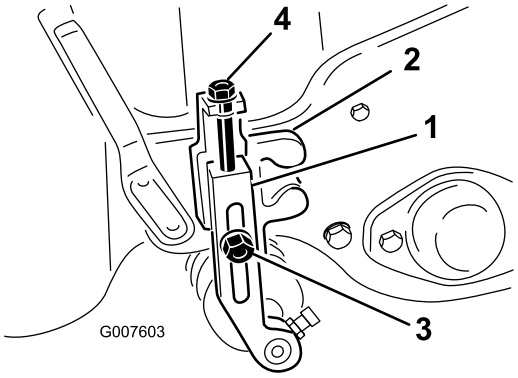

Figure 51

1. Height-of-cut arm
2. Height-of-cut bracket
3. Locknut
4. Adjusting screw

3. Loosen the nut on the gauge bar (Figure 52) and set the adjusting screw to the desired height-of-cut. The distance between the bottom of the screw head and the face of the bar is the height-of-cut.

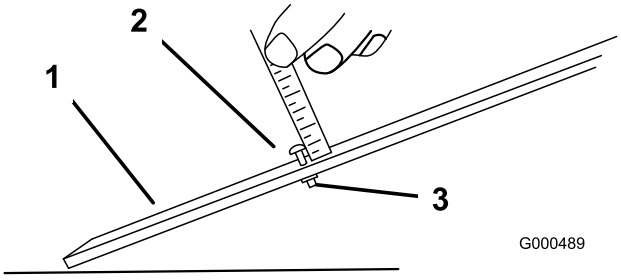

Figure 52

1. Gauge bar
2. Height adjusting screw
3. Nut

4. Hook the screw head on the cutting edge of the bedknife and rest the rear end of the bar on the rear roller (Figure 53).

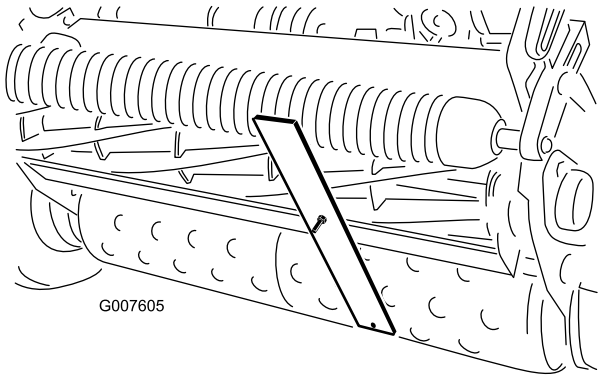

Figure 53

5. Rotate the adjusting screw until the roller contacts the front of the gauge bar.
6. Adjust both ends of the roller until the entire roller is parallel to the bedknife.

Important: **When set properly, the rear and front rollers will contact the gauge bar and the screw will be snug against the bedknife. This ensures the height-of-cut is identical at both ends of the bedknife.**

7. Tighten nuts to lock the adjustment.

Important: **To avoid scalping on undulating turf, ensure that the roller supports are positioned rearward (the roller closer to the reel).**

Note: The front roller can be put in three different positions (Figure 54), depending on the application and needs of the user.

- Use the front position when a groomer is installed.
- Use the middle position without a groomer.
- Use the third position in extremely undulating turf conditions.

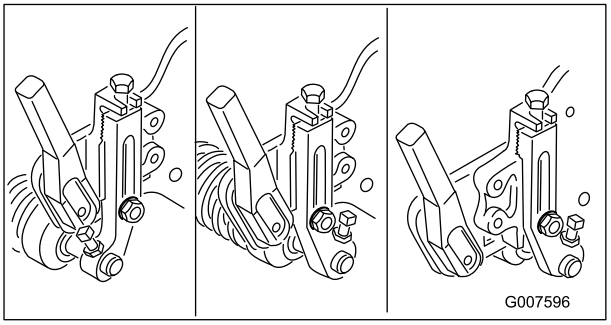

Figure 54

Adjusting the Grass Shield Height

Adjust the shield to ensure proper grass clipping discharge into the basket.

1. Measure the distance from the top of the front support rod to the front lip of the shield at each end of the cutting unit (Figure 55).

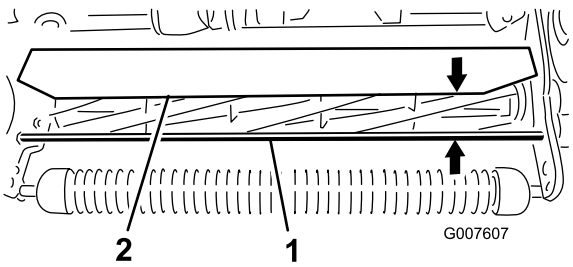

Figure 55

1. Support rod
2. Shield

2. The height of the shield from the support rod for normal cutting conditions should be 4 inches (10 cm).

Loosen the bolts and nuts securing each end of the shield to the sideplate and adjust the shield to the correct height.

3. Tighten the fasteners.

   Note: The shield can be lowered for drier conditions (clippings fly over top of the basket) or raised to allow for heavy wet grass conditions (clippings build up on the rear of the basket).

Adjusting the Cut-Off Bar

Adjust the cut-off bar to ensure that the clippings are cleanly discharged from the reel area.

1. Loosen the screws securing the top bar (Figure 56) to the cutting unit.

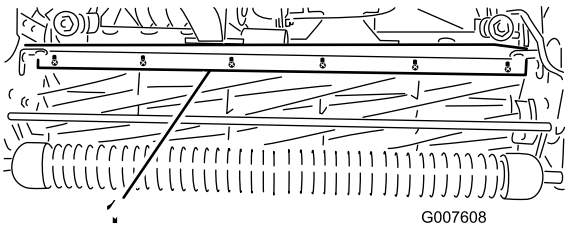

Figure 56

1. Cut-off bar

2. Insert a 0.060 inch (0.15 cm) feeler gauge between the top of the reel and the bar and tighten the screws.
3. Ensure that the bar and reel are equal distances apart across the entire reel.

   Note: The bar is adjustable to compensate for changes in turf conditions. Adjust the bar closer to the reel when the turf is extremely wet. By contrast, adjust the bar further away from the reel when turf conditions are dry. The bar should be parallel to the reel to ensure optimum performance. Adjust the bar whenever the shield height is adjusted or when the reel is sharpened on a reel grinder.

Bedbar Identification

To determine if the bedbar is standard or aggressive, check the left bedbar mounting ears. If the mounting ears are rounded it is a standard bedbar. If the mounting ears have a notch in them, it is an aggressive bedbar (Figure 57).

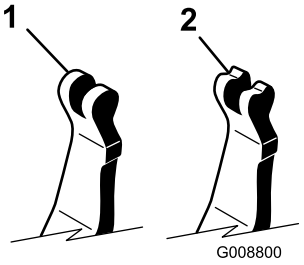

Figure 57

1. Standard bedbar
2. Aggressive bedbar

Setting the Machine to Match Turf Conditions

Use the following table to set the machine to match turf conditions.

Greensmower Cutting Unit Set-up Matrix				
Bedbars: Standard and Optional				
Part Number	**Description**	**Mower**	**Aggressiveness**	**Comments**
120-2682-03	Standard	Greensmaster 800	Less	Standard Greensmaster 800
112-9281-01	Standard	Greensmaster 1000	Less	Standard Greensmaster 1000
112-9279-03	Aggressive	Greensmaster 1000	More	
112-9280-01	Standard	Greensmaster 1600	Less	Standard Greensmaster 1600
110-9278-03	Aggressive	Greensmaster 1600	More	
Bedknives: Standard and Optional				
Part Number	**Description**	**Mower**	**Height of Cut Range**	**Comments**
98-7261	Microcut	Greensmaster 800	0.062 -0.125 inches (1.57-3.1 mm)	
117-1530	EdgeMax Microcut	Greensmaster 800	0.062 -0.125 inches (1.57-3.1 mm)	Standard
98-7260	Tournament	Greensmaster 800	0.125 -0.250 inches (3.1-6 mm)	
117-1532	EdgeMax Tournament	Greensmaster 800	0.125 -0.250 inches (3.1-6 mm)	Longer Wearing
110-2300	Extended Microcut	Greensmaster 800	0.062 -0.125 inches (1.57-3.1 mm)	Less Aggressive
110-2301	Low Cut	Greensmaster 800	0.250 inches (6 mm) and up	
93-4262	Microcut	Greensmaster 1000	0.062 -0.125 inches (1.57-3.1 mm)	
115-1880	EdgeMax Microcut	Greensmaster 1000	0.062 -0.125 inches (1.57-3.1 mm)	Standard
93-4263	Tournament	Greensmaster 1000	0.125 -0.250 inches (3.1-6 mm)	
115-1881	EdgeMax Tournament	Greensmaster 1000	0.125 -0.250 inches (3.1-6 mm)	Longer Wearing
93-4264	Low Cut	Greensmaster 1000	0.250 inches (6 mm) and up	
108-4303	Extended Microcut	Greenmaster 1000	0.062 -0.125 inches (1.57-3.1 mm)	Less Aggressive
112-9275	Microcut	Greensmaster 1600	<0.125 inches (3.1 mm)	
94-5885	Tournament	Greensmaster 1600	0.125 -0.250 inches (3.1-6 mm)	
104-2646	HighCut	Greensmaster 1600	0.250 inches (6 mm) and up	Tees
93-9015	Low Cut	Greensmaster 1600	0.250 inches (6 mm) and up	Standard Greensmaster 1600
Rollers: Standard and Optional				
Part Number	**Description**	**Mower**	**Diameter/Material**	**Comments**
99-6240	Narrow Wiehle	Greensmaster 800	2.0 inches Aluminum	Standard, 0.2 Spacing
99-6241	Narrow Wiehle	Greensmaster 1000	2.0 inches Aluminum	Standard, 0.2 Spacing

88-6790	Wide Wiehle	Greensmaster 1000	2.0 inches Aluminum	More Penetration, 0.43 Spacing
104-2642	Full Roller	Greensmaster 1000	2.0 inches Steel	Least Penetration
71-1550	Wiehle Roller	Greensmaster 1000	2.0 inches Cast Iron	More Penetration, 0.43 Spacing
93-9045	Wiehle Roller	Greensmaster 1000	2.5 inches Aluminum	24 inches Wide for Edge Support
52-3590	Swaged Roller	Greensmaster 1000	2.5 inches Aluminum	
93-9039	Narrow Wiehle	Greensmaster 1600	2.5 inches Aluminum	Standard
95-0930	Full Roller	Greensmaster 1600	2.5 inches Steel	Least Penetration
Clip Kit				
Part Number	**Description**	**Mower**	**Comments**	
65–9000	Clip Kit	Greensmaster 1000 & Greensmaster 1600	Decrease clip to 0.25"	

Servicing the Bedbar

Removing the Bedbar

1. Turn the bedbar adjuster screw counterclockwise to back the bedknife away from the reel (Figure 58).

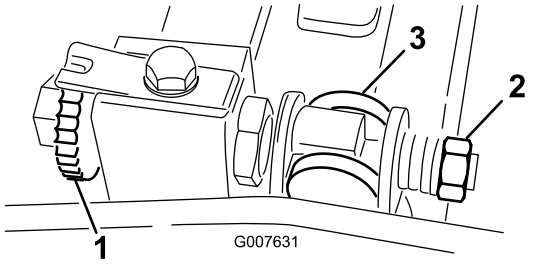

Figure 58

1. Bedbar adjusting screw
2. Spring tension nut
3. Bedbar

2. Back out the spring tension nut until the washer is no longer tensioned against the bedbar (Figure 58).
3. On each side of the machine loosen the jam nut securing the bedbar bolt (Figure 59).

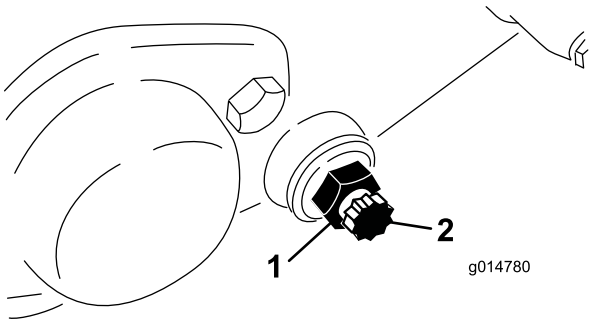

Figure 59

1. Jam nut
2. Bedbar bolt

4. Remove each bedbar bolt allowing the bedbar to be pulled downward and removed from the machine. Save the 2 nylon and 2 stamped steel washers on each end of the bedbar (Figure 59).

Installing the Bedbar

1. Install the bedbar, positioning the mounting ears between the washer and the bedbar adjuster.
2. Secure the bedbar to each side plate with the bedbar bolts (jam nuts on the bolts) and 8 washers. Position a nylon washer on each side of the side plate boss. Place a steel washer outside each of the nylon washers.
3. Torque the bolts to 240 to 320 inch-lb (27 to 36 N-m).
4. Tighten the jam nuts until the outside thrust washers just rotate freely.
5. Tighten the spring tension nut until the spring is collapsed, then back it off 1/2 turn.
6. Adjust the bedbar; refer to Adjusting the Bedknife to the Reel (page 32).

Backlapping the Reel

1. Remove the plug in the right reel drive cover (Figure 60).

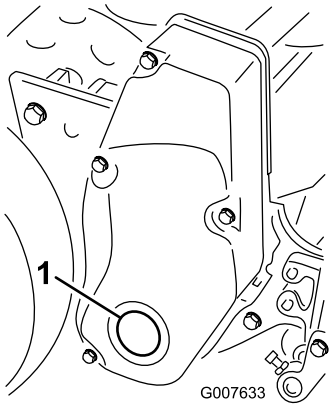

Figure 60

1. Cover plug

2. Insert a 1/2 inch socket extension, connected to the backlapping machine, into the square hole in the center of the reel pulley.
3. Backlap according to the procedure in the *Toro Sharpening Reel and Rotary Mowers Manual*, Form No. 80-300 PT.

⚠ DANGER

Contact with the reel or other moving parts can result in personal injury.

- **Stay away from the reel while backlapping.**
- **Never use a short handled paint brush for backlapping. Part No. 29-9100 Handle assembly complete or individual parts are available from your local Authorized Toro Distributor.**

Note: For a better cutting edge, run a file across the front face of the bedknife when the lapping operation is completed. This will remove any burrs or rough edges that may have built up on the cutting edge.

4. Install the plug in the cover when finished.

Storage

1. Remove grass clippings, dirt, and grime from the external parts of the entire machine, especially the engine. Clean dirt and chaff from the outside of the engine's cylinder head fins and blower housing.

   Important: You can wash the machine with mild detergent and water. Do not pressure wash the machine. Avoid excessive use of water, especially near the shift lever plate and engine.

2. For long-term storage (more than 90 days) add stabilizer/conditioner additive to the fuel in the tank.
   A. Run the engine to distribute conditioned fuel through the fuel system (5 minutes).
   B. Either stop the engine, allow it to cool, and drain the fuel tank, or operate the engine until it stops.
   C. Restart the engine and run it until it stops. Repeat, on Choke, until the engine will not restart.
   D. Dispose of the fuel properly. Recycle as per local codes.

   Note: Do not store stabilizer/conditioned gasoline over 90 days.
3. Check and tighten all bolts, nuts, and screws. Repair or replace any part that is damaged or defective.
4. Paint all scratched or bare metal surfaces. Paint is available from your Authorized Service Dealer.
5. Store the machine in a clean, dry garage or storage area. Cover the machine to protect it and keep it clean.

Notes:

Notes:

The Toro Total Coverage Guarantee

A Limited Warranty

Conditions and Products Covered

The Toro Company and its affiliate, Toro Warranty Company, pursuant to an agreement between them, jointly warrant your Toro Commercial product (“Product”) to be free from defects in materials or workmanship for two years or 1500 operational hours*, whichever occurs first. This warranty is applicable to all products with the exception of Aerators (refer to separate warranty statements for these products). Where a warrantable condition exists, we will repair the Product at no cost to you including diagnostics, labor, parts, and transportation. This warranty begins on the date the Product is delivered to the original retail purchaser.
* Product equipped with an hour meter.

Instructions for Obtaining Warranty Service

You are responsible for notifying the Commercial Products Distributor or Authorized Commercial Products Dealer from whom you purchased the Product as soon as you believe a warrantable condition exists. If you need help locating a Commercial Products Distributor or Authorized Dealer, or if you have questions regarding your warranty rights or responsibilities, you may contact us at:

Toro Commercial Products Service Department
Toro Warranty Company
8111 Lyndale Avenue South
Bloomington, MN 55420-1196

952–888–8801 or 800–952–2740
E-mail: commercial.warranty@toro.com

Owner Responsibilities

As the Product owner, you are responsible for required maintenance and adjustments stated in your *Operator's Manual*. Failure to perform required maintenance and adjustments can be grounds for disallowing a warranty claim.

Items and Conditions Not Covered

Not all product failures or malfunctions that occur during the warranty period are defects in materials or workmanship. This warranty does not cover the following:

- Product failures which result from the use of non-Toro replacement parts, or from installation and use of add-on, or modified non-Toro branded accessories and products. A separate warranty may be provided by the manufacturer of these items.
- Product failures which result from failure to perform recommended maintenance and/or adjustments. Failure to properly maintain your Toro product per the Recommended Maintenance listed in the *Operator’s Manual* can result in claims for warranty being denied.
- Product failures which result from operating the Product in an abusive, negligent, or reckless manner.
- Parts subject to consumption through use unless found to be defective. Examples of parts which are consumed, or used up, during normal Product operation include, but are not limited to, brake pads and linings, clutch linings, blades, reels, rollers and bearings (sealed or greasable), bed knives, spark plugs, castor wheels and bearings, tires, filters, belts, and certain sprayer components such as diaphragms, nozzles, and check valves, etc.
- Failures caused by outside influence. Conditions considered to be outside influence include, but are not limited to, weather, storage practices, contamination, use of unapproved fuels, coolants, lubricants, additives, fertilizers, water, or chemicals, etc.
- Failure or performance issues due to the use of fuels (e.g. gasoline, diesel, or biodiesel) that do not conform to their respective industry standards.
- Normal noise, vibration, wear and tear, and deterioration.
- Normal “wear and tear” includes, but is not limited to, damage to seats due to wear or abrasion, worn painted surfaces, scratched decals or windows, etc.

Parts

Parts scheduled for replacement as required maintenance are warranted for the period of time up to the scheduled replacement time for that part. Parts replaced under this warranty are covered for the duration of the original product warranty and become the property of Toro. Toro will make the final decision whether to repair any existing part or assembly or replace it. Toro may use remanufactured parts for warranty repairs.

Deep Cycle and Lithium-Ion Battery Warranty:

Deep cycle and Lithium-Ion batteries have a specified total number of kilowatt-hours they can deliver during their lifetime. Operating, recharging, and maintenance techniques can extend or reduce total battery life. As the batteries in this product are consumed, the amount of useful work between charging intervals will slowly decrease until the battery is completely worn out. Replacement of worn out batteries, due to normal consumption, is the responsibility of the product owner. Battery replacement may be required during the normal product warranty period at owner’s expense. Note: (Lithium-Ion battery only): A Lithium-Ion battery has a part only prorated warranty beginning year 3 through year 5 based on the time in service and kilowatt hours used. Refer to the *Operator's Manual* for additional information.

Maintenance is at Owner’s Expense

Engine tune-up, lubrication, cleaning and polishing, replacement of filters, coolant, and completing recommended maintenance are some of the normal services Toro products require that are at the owner’s expense.

General Conditions

Repair by an Authorized Toro Distributor or Dealer is your sole remedy under this warranty.

Neither The Toro Company nor Toro Warranty Company is liable for indirect, incidental or consequential damages in connection with the use of the Toro Products covered by this warranty, including any cost or expense of providing substitute equipment or service during reasonable periods of malfunction or non-use pending completion of repairs under this warranty. Except for the Emissions warranty referenced below, if applicable, there is no other express warranty. All implied warranties of merchantability and fitness for use are limited to the duration of this express warranty.

Some states do not allow exclusions of incidental or consequential damages, or limitations on how long an implied warranty lasts, so the above exclusions and limitations may not apply to you. This warranty gives you specific legal rights, and you may also have other rights which vary from state to state.

Note regarding engine warranty:

The Emissions Control System on your Product may be covered by a separate warranty meeting requirements established by the U.S. Environmental Protection Agency (EPA) and/or the California Air Resources Board (CARB). The hour limitations set forth above do not apply to the Emissions Control System Warranty. Refer to the Engine Emission Control Warranty Statement supplied with your product or contained in the engine manufacturer’s documentation for details

Countries Other than the United States or Canada

Customers who have purchased Toro products exported from the United States or Canada should contact their Toro Distributor (Dealer) to obtain guarantee policies for your country, province, or state. If for any reason you are dissatisfied with your Distributor's service or have difficulty obtaining guarantee information, contact the Toro importer.