FORM NO. 3320-712

TORO

MODEL NO. 16212B - 2000001 & UP

OPERATOR'S MANUAL

21" SIDE DISCHARGE MOWER

⚠ SAFETY INSTRUCTIONS

WARNING: Engine exhaust contains carbon monoxide which is an odorless, deadly poison. Carbon monoxide is also known to the State of California to cause birth defects. Do not run engine indoors or in an enclosed area.

BEFORE OPERATING

1. Read this manual carefully before operating the mower. Become familiar with the controls and proper use of the mower. Never allow children to operate the mower or adults to operate it without the proper instructions.

2. Keep everyone, especially children and pets, away from area of operation. Thoroughly inspect area where mower will be used and remove sticks, stones, wire, and debris.

3. Wear long pants and substantial shoes. Do not operate mower while wearing open sandals or when barefoot.

4. Always wear safety glasses or eye shields during operation to protect eyes from foreign objects that may be thrown from the machine.

5. Check fuel level before starting engine. Do not fill fuel tank indoors, when the engine is running, or until engine cools for several minutes after running. Wipe up spilled gasoline before starting engine.

6. Keep all guards, shields, and safety devices in place. Repair or replace damaged parts, including decals.

7. Disengage self-propelled drive before starting engine. Engine and blade are designed to stop when control bar is released. Ensure control and brake function properly before each use of mower.

WHILE OPERATING

8. Do not run engine indoors.

9. Always maintain secure footing. Keep a firm grip on the handle and walk; never run. Never operate mower in wet grass. Mow only in daylight or in good artificial light.

10. Mow across the face of slopes; never up and down. Use extreme caution when changing direction on slopes. Do not mow excessively steep slopes.

11. Keep face, hands, and feet away from the mower housing and cutter blade when the engine is running. Stay behind the handle until the engine stops and keep clear of discharge opening at all times.

12. During operation grass deflector or complete bagging assembly must be installed on mower.

13. Shut engine off and wait for all moving parts to stop before unclogging chute or removing grass catcher. Use a stick, not your hand, to unclog chute.

14. Since the blade rotates for a few seconds after control bar is released, stay behind the handle until all moving parts stop.

15. After striking a foreign object or if mower vibrates abnormally, stop engine and remove wire from spark plug. Check mower for damage and make all repairs before using mower again.

16. Stop the engine and wait for all moving parts to stop before adjusting the height-of-cut.

17. Stop the engine when crossing a gravel driveway, road or sidewalk.

©The Toro Company-1991

SAFETY INSTRUCTIONS

18. Stop engine before leaving the operator's position—behind the handle. Disconnect wire from spark plug if mower will be unattended.

19. Do not touch muffler or engine while it is running or shortly after it is stopped because the muffler and engine will be hot enough to cause a burn.

MAINTENANCE

20. Perform only those maintenance instructions described in this manual. If major repairs are ever needed or if assistance is desired, contact your local Authorized TORO Service Dealer.

21. Before mower is cleaned, inspected, serviced, or adjusted, stop engine and disconnect wire from spark plug. Keep wire away from plug to prevent accidental starting.

22. To ensure the mower is in safe operating condition, frequently check and keep all nuts, bolts, and screws tight. Ensure blade bolt is tightened to proper specifications.

23. To reduce fire hazard, keep engine free of excessive grease, grass, leaves, and accumulations of dirt.

24. Check optional grass catcher bag frequently for wear, tears or deterioration. Replace with a new bag for your protection.

25. Allow engine to cool before storing mower in any enclosure. Do not store mower near any open flame or where gasoline fumes may be ignited by a spark.

26. Do not overspeed the engine by changing governor settings.

27. At the time of manufacture, the mower conformed to the safety standards in effect for rotary mowers. To ensure best performance and continued safety certification of the mower, use genuine TORO replacement parts and accessories. Replacement parts and accessories made by other manufacturers may result in non-conformance with the safety standards, and that could be dangerous.

SAFETY SYMBOL GLOSSARY

Safety decals and instructions are easily visible to the operator and are located near any area of potential danger. Replace any decal that is damaged or lost.



Safety alert



Keep hands/feet away from blade



Engine start



Choke on



Keep hands away



Keep all guards in place



Engine speed (Throttle)



Keep bystanders from mowing area



Slow



Fast



Stop engine before leaving operator position



Read and understand operator's manual

TABLE OF CONTENTS

	Page
Set-Up Instructions	3
Before Operating	4
Operating Instructions	5
Maintenance	7
Servicing Air Cleaner	7
Replacing Spark Plug	7
Cleaning Mower Housing	7
Draining Fuel	8
Inspecting/Removing/Sharpening Blade	8
Lubrication	9
Checking Transmission Oil Level	9
Adjusting Wheel Drive Control	10
Adjusting Blade Brake	10
Preparing Mower For Storage	11
Optional Spark Arrestor	12
Toro Service Support	12
Product Identification	12

SET-UP INSTRUCTIONS

INSTALL HANDLES AND STARTER ROPE

1. LOWER HANDLE (Fig. 1)—Push ends of handle together and install on pivot pins. Move handle and latches backward until handle studs snap into center hole. Push hair pin cotter through holes in pivot pins.

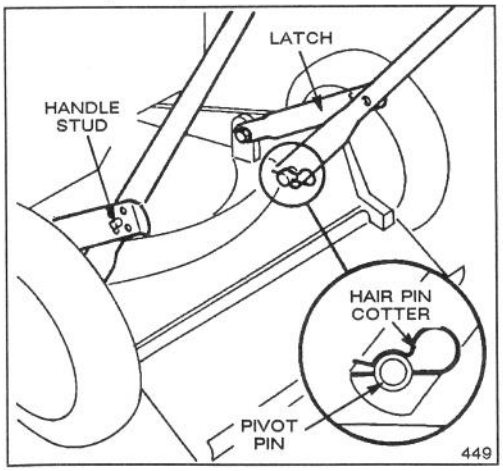

Figure 1

2. UPPER HANDLE (Fig. 2)—Secure upper and lower handles in place with handle bolts and knobs. Control cables must be behind lower handle cross member. Secure control cables in position with cable ties.

3. STARTER ROPE (Fig. 3)—Pull starter rope through opening in rope guide. By squeezing control bar (Fig. 7) against handle, blade brake will release and allow rope to be pulled easily up to rope guide.

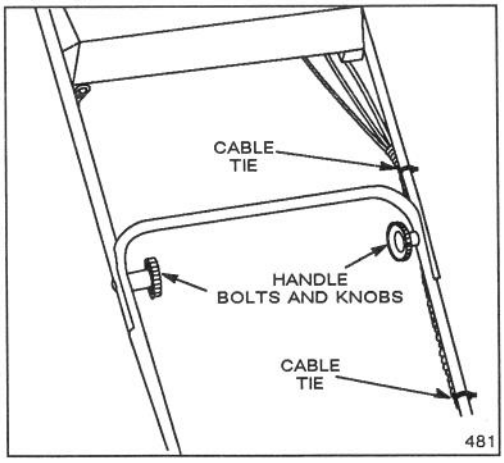

Figure 2

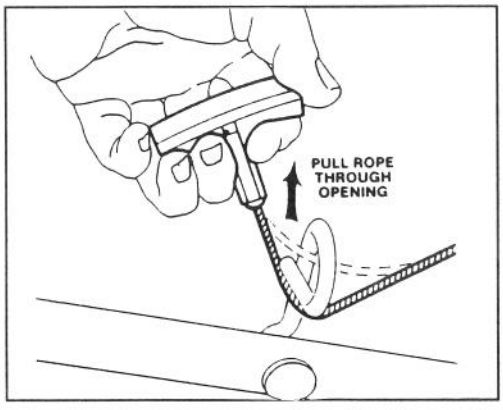

Figure 3

BEFORE OPERATING

⚠ WARNING

DANGER: Gasoline is extremely flammable and explosive under certain conditions. Do not smoke when handling fuel and keep fuel far away from open flames and sparks. Never buy more than a 30 day supply of gasoline. Store it in an approved container. Keep gasoline out of reach of children.

Refuel outdoors and only when engine is cold. Fill tank to within 1/4" to 1/2" (6 to 13 mm) from top of tank, not into filler neck. This space is for expansion of fuel. Use funnel or spout to prevent spilling. Wipe up any spilled gas.

MIX GASOLINE AND OIL—50:1 RATIO

1. APPROVED OIL—For simplicity and best engine performance, mix the contents of one bottle of Toro 50:1 Two-Cycle Oil with two gallons of fresh, unleaded regular gasoline. Leaded regular gasoline may be used if unleaded regular is not available.

Toro Two-Cycle Oil is specially formulated to provide superior lubrication, make starting easy, and prolong engine life. If Toro Two-Cycle Oil is not available, mix two gallons of gasoline and 5.2 ounces of another high grade two-cycle oil that has the NMMA or BIA-TCW certification printed on the label.

Toro also recommends that Toro Stabilizer/Conditioner be used regularly in all Toro gasoline powered products during operation and storage seasons. Toro Stabilizer/Conditioner cleans the engine during operation and prevents gum-like varnish deposits from forming in the engine during periods of storage.

IMPORTANT: YOU CAN ALSO USE TORO "EASY-MIX" TWO-CYCLE OIL (3.2 OUNCE BOTTLE MIXED ONE PER GALLON OF GASOLINE) IN THIS TORO TWO-CYCLE ENGINE.

NEVER USE AUTOMOTIVE OIL (i.e. SAE 30, 10W30 etc.), TWO-CYCLE OIL THAT IS NOT CERTIFIED NMMA/BIA-TCW, OR THE WRONG MIX RATIO BECAUSE THE ENGINE CAN BE DAMAGED, AND IT WOULD NOT BE COVERED BY THE TORO WARRANTY.

2. Mixing Gasoline and Oil (Fig. 5)—Pour correct amount of two-cycle oil into an approved gasoline container and add a half gallon of gasoline. Install cap on gasoline container and shake the container to mix oil and gas thoroughly. Remove cap and add remaining amount of gasoline.

NOTE: Do not mix gasoline and oil in the product fuel tank. Oil that is at room temperature mixes easier and more thoroughly than cold oil.

IMPORTANT: NEVER USE METHANOL, GASOLINE CONTAINING METHANOL, GASOHOL CONTAINING MORE THAN 10% ETHANOL, PREMIUM GASOLINE, OR WHITE GAS BECAUSE ENGINE FUEL SYSTEM DAMAGE COULD RESULT.

DO NOT USE FUEL ADDITIVES OTHER THAN THOSE MANUFACTURED FOR FUEL STABILIZATION DURING STORAGE SUCH AS TORO'S STABILIZER/CONDITIONER OR A SIMILAR PRODUCT. TORO'S STABILIZER/CONDITIONER IS A PETROLEUM DISTILLATE BASED STABILIZER/CONDITIONER. TORO DOES NOT RECOMMEND STABILIZERS WITH AN ALCOHOL BASE SUCH AS ETHANOL, METHANOL OR ISOPROPYL. STABILIZERS SHOULD NOT BE USED TO TRY TO ENHANCE THE POWER OR PERFORMANCE OF MACHINE.

BEFORE OPERATING

50:1 GAS/OIL Mixing Chart

U.S. GALLON	
Gasoline	**Oil**
1 gallon	2.6 oz.
2 gallons	5.2 oz.

Figure 4

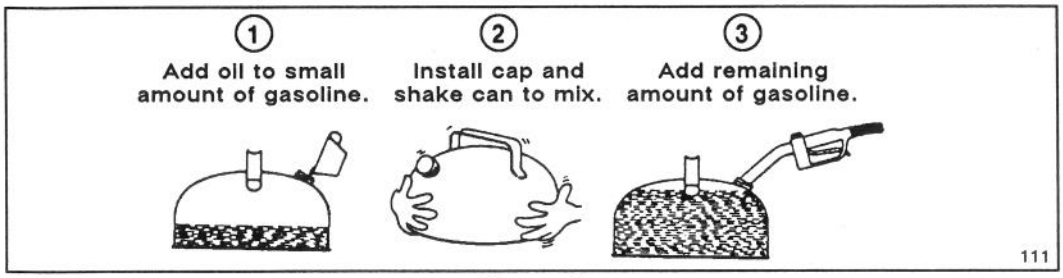

Figure 5

OPERATING INSTRUCTIONS

2-IN-1 MOWING VERSATILITY

SIDE DISCHARGE—In summer, disperse clippings to the side when grass grows slower and is drier.

SIDE BAG—Optional side bag kit (Fig. 6) lets you bag lush grass in spring. In the fall, bag leaves while you mow to eliminate the hand-blistering raking job.

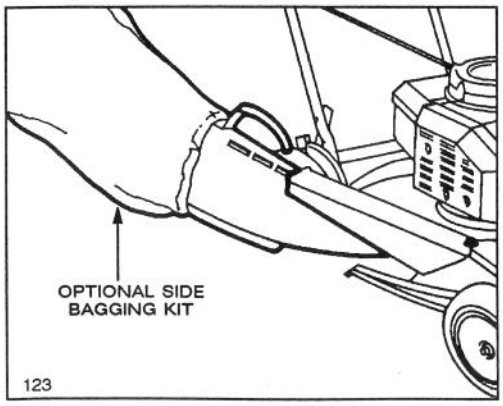

Figure 6

STARTING, STOPPING, SELF-PROPELLING

1. CONTROLS (Fig. 7)—Wheel drive control, throttle/choke, blade control bar and fingertip starter are on upper handle.

2. STARTING (Fig. 7)—Push wire onto spark plug. Move wheel drive control to DISENGAGE and throttle control to CHOKE. Cover hole in center of primer with thumb and push once. Hold control bar against handle. Pull fingertip starter out until positive engagement results; then pull vigorously to start engine. Regulate throttle as required when engine starts.

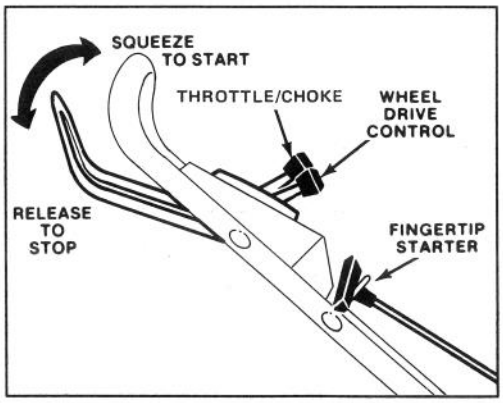

Figure 7

OPERATING INSTRUCTIONS

3. SELF-PROPELLING (Fig. 7)—Move wheel drive control to ENGAGE. Front wheels will now drive mower. For maneuvering and making turns, push down on handle to raise front wheels slightly off grass. Move control to DISENGAGE detent to stop front wheel drive.

4. STOPPING—Release control bar to stop engine, blade and traction drive. Pull wire off spark plug if mower is unattended or not used.

OPERATING TIPS

1. BEFORE OPERATING—Ensure engine, brake and control bar function properly. When control bar is released, engine and blade are designed to stop.

2. CUTTING AND BAGGING—To improve quality of cut, discharge clippings toward previously cut area. Best results are normally achieved when engine runs at maximum speed and only about 1/4 of the grass blade is cut. If long grass must be cut, use highest height-of-cut setting for first mowing. Then recut grass at a more normal setting. If too long of grass is cut or optional bag is allowed to get too full, discharge chute may plug and cause engine to stall. Empty optional grass bag often.

3. SHARPEN BLADE—Begin each cutting season with a sharp blade. Periodically file down nicks.

ADJUSTING HEIGHT-OF-CUT

⚠ DANGER

Do not adjust the height-of-cut settings when engine is running.

Five notches case into the housing represent each graduated increment (Fig. 8).

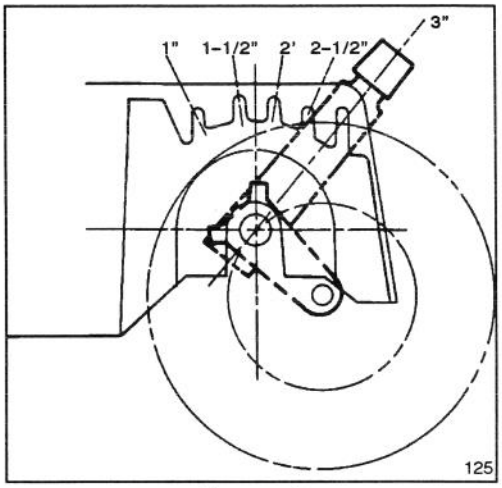

Figure 8

1. Stop the engine and pull wire off the spark plug (Fig. 10).

2. For easier adjustment, lift housing up so wheel is off ground. **Do not place hands under deck to lift housing.** Squeeze adjusting lever toward wheel (Fig. 9) and move it to the desired setting. Ensure pin on adjusting lever engages notch in housing wear plate. Adjust all wheels to the same setting.

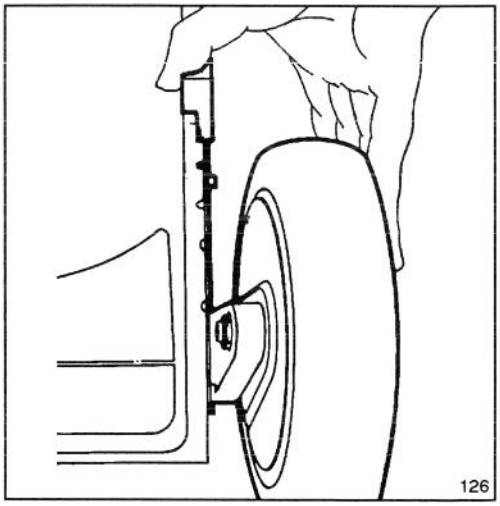

Figure 9

MAINTENANCE

⚠ CAUTION

Pull wire off spark plug before performing adjustments or maintenance.

SERVICING AIR CLEANER

Normally, clean air cleaner after every 25 operating hours. More frequent cleaning is required when mower is operated in dusty or dirty conditions.

1. Stop engine and pull wire off spark plug (Fig. 10).
2. Lift tabs at top of air cleaner cover and pivot cover down. Clean cover thoroughly (Fig. 10).
3. If outside of foam element is dirty, remove it from air cleaner body (Fig. 10). Clean thoroughly.

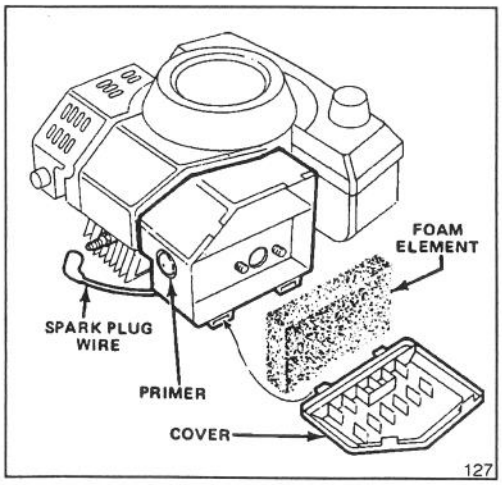

Figure 10

A. WASH foam element in a solution of liquid soap and warm water. Squeeze to remove dirt, but do not twist because foam may tear. Rinse thoroughly in clear water.

B. DRY by wrapping in a clean rag. Squeeze rag and foam element to dry.

C. SATURATE element with 5 teaspoons (25 ml) of SAE 30 engine oil. Squeeze element to remove excess oil and to distribute oil thoroughly. A damp element is desirable.

4. Reinstall foam element and air cleaner cover.

IMPORTANT: Do not operate engine without air cleaner element because extreme engine wear and damage will likely result.

REPLACING SPARK PLUG

Use an NGK BPMR4A spark plug or equivalent. Correct air gap is 0.032" (0.81 mm). Remove plug after every 25 operating hours and check its condition.

1. Stop engine and pull wire off spark plug (Fig. 10).
2. Clean around spark plug and remove plug from cylinder head.

IMPORTANT: Replace a cracked, fouled, or dirty spark plug. Do not sand blast, scrape, or clean electrodes because engine damage could result from grit entering cylinder.

3. Set air gap at 0.032" (0.81 mm) (Fig. 11). Install correctly gapped spark plug and gasket seal. Tighten plug firmly to 10 ft-lb (13.6 N·m).

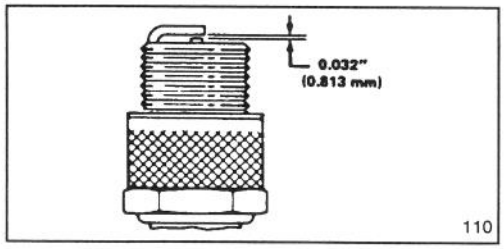

Figure 11

CLEANING MOWER HOUSING

To ensure best performance, keep underside of mower housing and grass deflector clean.

1. Drain fuel tank: refer to Draining Fuel, page 8.
2. Tip mower on its left side (Fig. 12).
3. Remove dirt and grass clippings that stick to housing with a hardwood scraper. Avoid burrs and sharp edges.

MAINTENANCE

DRAINING FUEL

1. Stop engine. Pull wire off spark plug (Fig. 10).

2. Remove cap from fuel tank and use pump-type syphon to drain fuel into clean gas can.

Note: This is the only procedure recommended for draining fuel.

INSPECTING/REMOVING/SHARPENING BLADE

1. Stop engine and pull wire off spark plug (Fig. 10).

2. Drain fuel tank; refer to Draining Fuel, page 8.

⚠ CAUTION

Do not attempt to inspect, remove or replace blade without first removing the spark plug wire from spark plug and fastening it away from accidental contact with spark plug.

3. Tip mower on its left side (Fig.12).

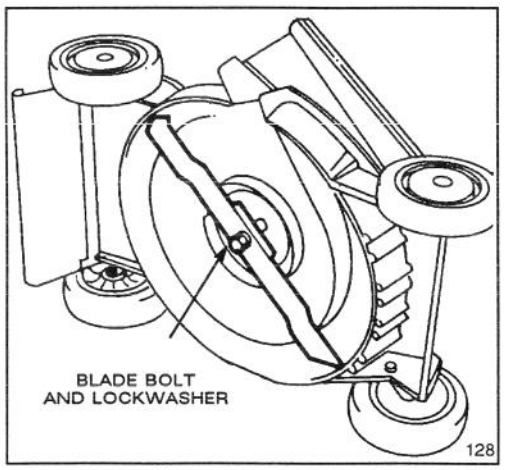

Figure 12

4. INSPECTING BLADE—Carefully examine blade for sharpness and wear, especially where flat and curved parts meet (Fig. 13A). Since sand and abrasive material can wear away the metal that connects the flat and curved parts of the blade, check blade before using the mower. If a slot or wear is noticed, (Fig. 13B & C), replace blade. Refer to step 5.

Note: For best performance, install new blade before cutting season begins. During the year, file down small nicks to maintain the cutting edge.

⚠ CAUTION

If blade is allowed to wear, a slot may form near the sail. Eventually a piece of blade may break off resulting in serious injury to yourself or a bystander.

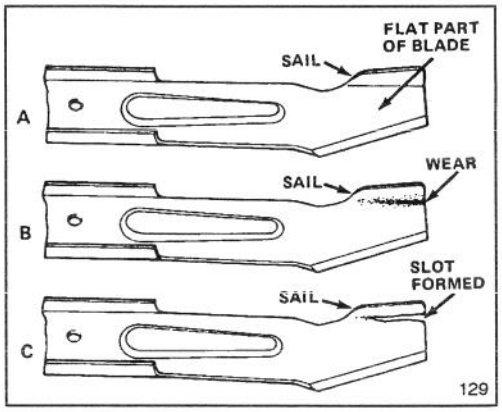

Figure 13

5. REMOVING BLADE—Grasp end of blade using a rag or thickly padded glove. Remove blade bolt, lockwasher, and blade (Fig. 12).

6. SHARPENING BLADE—Using a file, sharpen top side of blade and maintain original cutting angle (Fig. 14). The blade will remain balanced if same amount of material is removed from both cutting edges.

MAINTENANCE

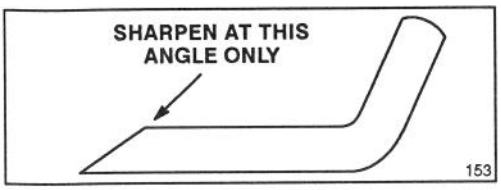

Figure 14

IMPORTANT: Check balance of blade by putting it on a blade balancer. An inexpensive balancer can be purchased at a hardware store. A balanced blade stays in a horizontal position and an unbalanced blade settles to the heavy side. If blade is not balanced, file more metal off cutting edge on heavy end of blade.

7. Install sharp, balanced blade with lockwasher and blade bolt. Sail part of blade must point toward top of mower housing to ensure correct installation. Tighten blade bolt to 50 ft-lb (68 N·m).

LUBRICATION

After every 25 operating hours or when season ends, front and rear wheels must be lubricated.

1. OIL FRONT AND REAR WHEELS—Apply 2 or 3 drops of light oil on inside of wheel bolts. Spin wheels to distribute oil into bushings.

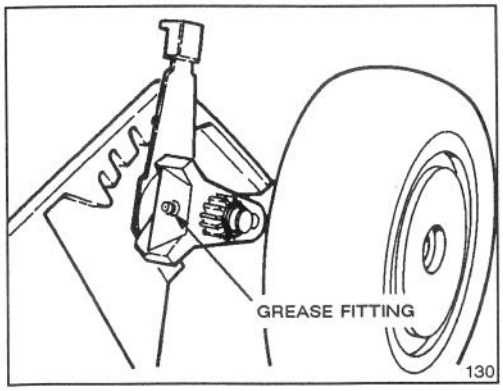

Figure 15

2. GREASE FRONT AXLE PIVOTS (Fig. 15)—Adjust height-of-cut to 3-inch setting. Wipe grease fitting with clean rag. Install grease gun onto fitting and gently apply 2 or 3 pumps of #2 Multi-Purpose Lithium Base Grease. Excessive pressure may damage seals.

CHECKING TRANSMISSION OIL LEVEL

The transmission is filled with #90 gear oil that has a GL-5 or GL-6 rating. Level of gear oil must be checked at least every 25 operating hours, before storage and before the mowing season begins.

1. Stop engine and pull wire off spark plug (Fig. 10). Remove two screws and lift off transmission cover (Fig. 16).

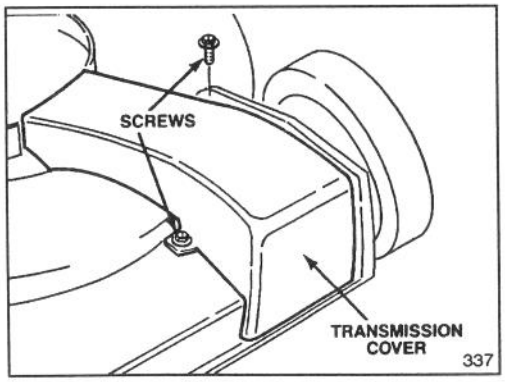

Figure 16

2. CHECKING GEAR OIL LEVEL (Fig. 17)-Position mower on level surface and clean around plastic plug. Remove plastic plug and watch for oil to ooze out of hole. If gear oil oozed out, quickly install plastic plug because oil is at proper level. If oil does not flow, add gear oil: see step 3.

IMPORTANT: Low oil level may indicate a leak where axle goes through both side of transmission case. Transmission case should be inspected by an Authorized TORO Service Dealer.

MAINTENANCE

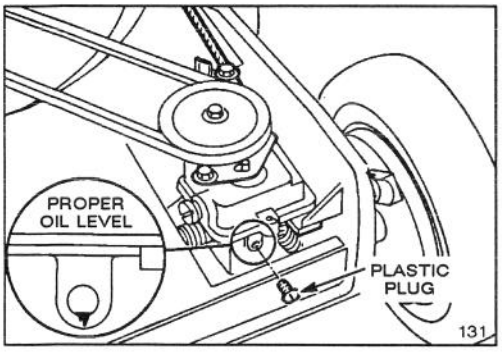

Figure 17

3. ADDING GEAR OIL—Slowly add #90 gear oil that has a GL-5 or GL-6 rating. Stop when oil oozes lout of hole in gear case, and quickly install plastic plug. DO NOT OVERTIGHTEN PLASTIC PLUG BECAUSE THREADS MAY STRIP.

Note: A clean Plews type oil container or any other clean container with a small tip can be used to add oil. Using a dirty oil container could contaminate transmission case and eventually cause damage.

4. Reinstall transmission cover.

ADJUSTING WHEEL DRIVE CONTROL

If front wheels do not engage and disengage of if new wheel drive control cable is installed, an adjustment is required.

1. Stop engine and pul wire off spark plug (Fig. 10).

2. Remove transmission cover (Fig. 16).

3. ADJUSTMENT (Fig. 18)—Loosen belt guide screw until cable conduit slides. Move handle-mounted wheel drive control to DISENGAGE detent. Move shift arm toward clamp screw and hold in place. Pull cable conduit to remove slack and tighten belt guide screw.

4. Reinstall transmission cover.

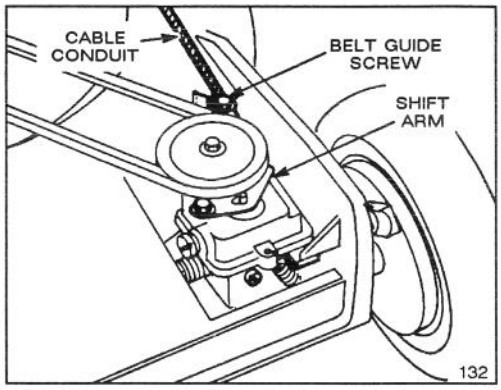

Figure 18

ADJUSTING BLADE BRAKE

Whenever a new blade brake cable assembly is installed, an adjustment is required.

1. Stop engine and pull wire off spark plug (Fig. 10).

2. CHECK ADJUSTMENT (Fig. 19)—Move control bar toward handle until slack in wire is removed. Gap between brake lever and handle must be 3/16"-1/4". See step 3 for adjustment.

3. ADJUST CABLE CONDUIT—Loosen nut on cable bracket (Fig. 19). Insert 3/16"-1/4" object between brake lever and handle. Pull down on cable conduit until slack is removed. Then tighten nut.

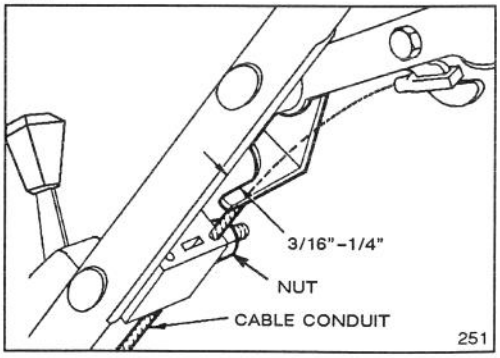

Figure 19

MAINTENANCE

PREPARING MOWER FOR STORAGE

1. For long term storage, either drain gasoline from fuel tank or add a fuel additive to the gasoline. To drain gasoline, refer to Draining Fuel, page 8. After fuel is drained, start engine and let it idle until all fuel is consumed and engine stops. If gasoline is not drained, gum–like varnish deposits will form and cause poor engine operation, even starting problems.

Fuel can be left in gas tank only if a fuel stabilizer, such as Toro's Stabilizer/Conditioner, is added to gasoline before storing. Toro's Stabilizer/Conditioner is a petroleum distillate based stabilizer/conditioner. Toro does not recommend stabilizers with an alcohol base, such as ethanol, methanol or isopropyl. Use fuel stabilizer in recommended quantities as specified on container.

Under normal conditions, fuel stabilizers remain effective in fuel for 6–8 months.

2. Remove spark plug and pour 2 teaspoons of Toro Two–Cycle Oil into hole in cylinder. Pull starter rope slowly to coat inside of cylinder. Install spark plug and tighten to 10 ft–lb (13.6 N·m). **DO NOT REINSTALL WIRE ON SPARK PLUG.**

3. Clean underside of housing: refer to Cleaning Mower Housing, page 7.

4. Check condition of blade: refer to Inspecting/Removing/Sharpening Blade, page 8.

5. Tighten all nuts, bolts, and screws.

6. Clean dirt and chaff from cylinder, cylinder head fins, and blower housing. Also remove grass clippings, dirt, and grime from external parts of the engine, shrouding, and top of mower housing.

7. Clean air cleaner: refer to Servicing Air Cleaner, page 7.

8. Lubricate the pivot arms: refer to Lubrication, page 9.

9. Check transmission oil: refer to Checking Transmission Oil Level, page 9.

10. Touch up all rusted or chipped paint surfaces. Toro Re–Kote paint is available from an Authorized TORO Service Dealer.

11. Store mower in a clean, dry place, out of the reach of children. Cover mower to keep it clean and protected.

OPTIONAL SPARK ARRESTOR – PART #81–0200

If a spark arrestor is required because of local, state, or federal regulations, it may be purchased at your local Authorized TORO Service Dealer. If mower is operated on any California forest, brush, or grass covered land without a properly operating spark arrestor, the operator is violating state law, Section 4442 Public Resources Code.

TORO SERVICE SUPPORT

If help – concerning safety, set-up, operation, maintenance, or troubleshooting – is ever needed, contact the local Authorized TORO Service Dealer or Distributor. Refer to the "Yellow Pages" for assistance. In addition to skilled service technicians, the dealer and distributor have factory approved accessories and replacement parts. Keep your Toro all TORO. Buy genuine TORO replacement parts and accessories.

PRODUCT IDENTIFICATION

The model and serial number decal is located at rear of mower housing. Always refer to specific numbers on this decal in correspondence or when replacement parts are needed.