FORM NO. 3315–781 Rev. A

TORO

MODEL NO. 20181 – 3900001 & UP

OPERATOR'S MANUAL

18" RECYCLER®II MOWER

⚠ SAFETY INSTRUCTIONS

This mower "meets or exceeds CPSC blade safety requirements for walk behind rotary mowers" and the B71.1–1990 specifications of the American National Standards Institute. However, improper use or maintenance by the operator or owner can result in injury. To reduce the potential for injury, comply with these safety instructions and always pay attention to the safety alert symbol ⚠ which means CAUTION, WARNING OR DANGER — "personal safety instruction." Failure to comply with the instruction may result in personal injury.

WARNING: Engine exhaust contains carbon monoxide which is an odorless, deadly poison. Carbon monoxide is also known to the State of California to cause birth defects. Do not run engine indoors or in an enclosed area.

BEFORE OPERATING

1. Read this manual carefully before operating the mower. Become familiar with the controls and proper use of the mower. Never allow children to operate the mower or adults to operate it without proper instructions.

2. Keep everyone, especially children and pets, away from area of operation. Thoroughly inspect area where mower will be used and remove sticks, stones, wire, and debris.

3. Wear long pants and substantial shoes. Do not operate mower while wearing open–toed shoes, jewelry, loose clothing or when barefoot.

4. Always wear safety glasses or eye shields during operation to protect eyes from foreign objects that may be thrown from the machine.

5. Check fuel level before starting engine. Do not fill fuel tank indoors, when the engine is running, or until engine cools for several minutes after running. Wipe up spilled gasoline before starting engine.

6. Keep all guards, shields, safety devices, cover–deflector assembly, optional grass catcher, optional side discharge chute or optional discharge tunnel plug in place.

7. Repair or replace damaged parts, including decals. Check all safety devices before each use.

8. Engine and blade are designed to stop when engine kill control bar is released. Ensure engine kill control bar and brake function properly before each use of mower.

WHILE OPERATING

9. Do not run engine indoors.

10. Always maintain secure footing. Keep a firm grip on the handle and walk; never run. Never operate mower in wet grass. Mow only in daylight or in good artificial light.

11. Mow across the face of slopes; never up and down. Use extreme caution when changing direction on slopes. Do not mow excessively steep slopes.

12. Keep face, hands and feet away from the mower housing and cutter blade when the engine is running. Stay behind the handle until the engine stops.

13. Since the blade rotates for a few seconds after the engine kill control bar is released, stay behind the handle until all moving parts stop.

14. After striking a foreign object or if mower vibrates abnormally, stop engine and remove wire from spark plug. Check mower for damage and make all repairs before using mower again.

15. Stop the engine before adjusting the height–of–cut.

16. Stop the engine when crossing a gravel driveway, road, or sidewalk.

17. Stop engine before leaving the operator's position—behind the handle. Disconnect wire from spark plug if mower will be unattended.

18. Do not touch engine while it is running or shortly after it is stopped because engine will be hot enough to cause a burn.

19. Refuel only when engine is cool.

MAINTENANCE

20. Perform only those maintenance instructions described in this manual. If major repairs are ever needed or if assistance is desired, contact your local Authorized TORO Service Dealer.

©The Toro Company–1992, Rev. 1993
All Rights Reserved

⚠ SAFETY INSTRUCTIONS

21. Before mower is cleaned, inspected, serviced, or adjusted, stop engine and disconnect wire from spark plug. Keep wire away from plug to prevent accidental starting.

22. To ensure the mower is in safe operating condition, frequently check and keep all nuts, bolts, and screws tight. Ensure blade bolt is tightened to 50 ft–lb (68 N·m).

23. To reduce fire hazard, keep engine free of excessive grease, grass, leaves, and accumulations of dirt.

24. Allow engine to cool before storing mower in any enclosure. Do not store mower near any open flame or where gasoline fumes may be ignited by a spark.

25. Do not overspeed the engine by changing governor settings.

26. At the time of manufacture, the mower conformed to the safety standards in effect for rotary mowers. To ensure best performance and continued safety certification of the mower, use genuine TORO replacement parts and accessories. Replacement parts and accessories made by other manufacturers may result in non–conformance with the safety standards, and that could be dangerous.

⚠ SAFETY DECALS AND INSTRUCTIONS

Safety decals and instructions are easily visible to the operator and are located near any area of potential danger. Replace any decal that is damaged or lost.

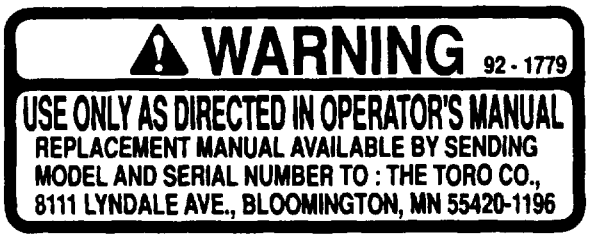

ON REAR DECK
(Part No. 92–1779)



ON REAR DECK
(Part No. 71–1280)



ON MOWER HOUSING
(Part No. 39–5770)

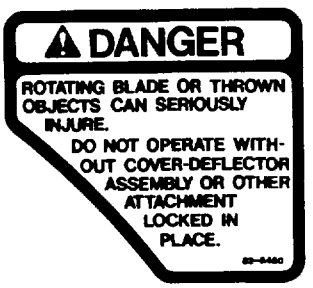

ON TOP OF MOWER DECK
(Part No. 82–8450)

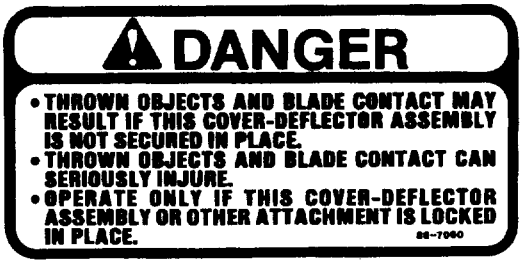

ON DISCHARGE TUNNEL COVER
(Part No. 85–7060)

TABLE OF CONTENTS

	Page
Set–Up Instructions	3
Before Operating	4
Recycler®II Mower Tips	5
Operating Instructions	6
Maintenance	7
Servicing Air Cleaner	7
Replacing Spark Plug	8
Draining Gasoline	8
Changing Crankcase Oil	8
Adjusting Throttle	8
Inspecting/Removing/Sharpening Blade	9
Cleaning Mower Housing	10
Preparing Mower For Storage	10
Optional Equipment	11
Product Identification	11
Toro Service Support	11
The Toro Total Coverage Guarantee	

SET–UP INSTRUCTIONS

INSTALL HANDLE AND STARTER ROPE

Note: Determine left and right sides of mower by standing in the normal operator's position.

1. LOWER HANDLE—Push bushings through bottom holes of lower handle (Fig. 1).

2. Squeeze ends of lower handle together and install on pivot pins (Fig. 1).

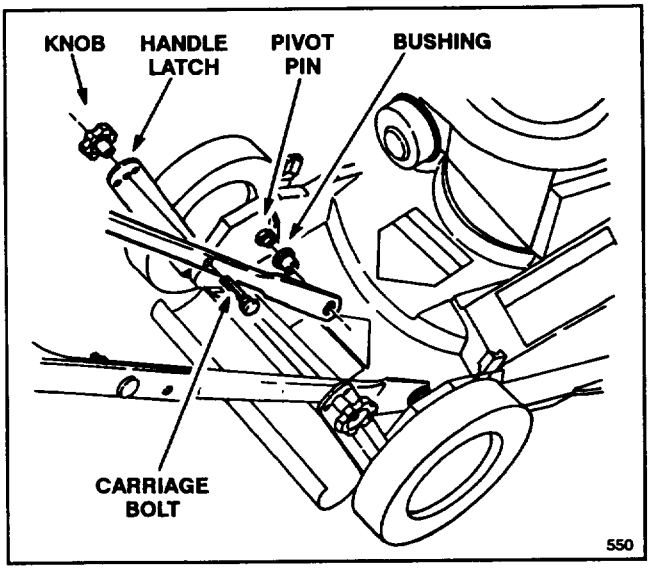

Figure 1

3. Position handle latches (Fig. 1) so that holes in latches align with holes in handle.

4. Insert carriage bolts through holes in handle and handle latches. Install knobs on outside of handle and tighten securely (Fig. 1).

Note: Handle height can be adjusted for operator comfort by positioning handle bolts and knobs in one of three holes in handle latches.

5. Ensure control cables are positioned to the rear and between the handles and handle latches.

6. UPPER HANDLE (Fig. 2)—Secure upper and lower handles in place with handle bolts and nuts. Position nuts on inside of handle.

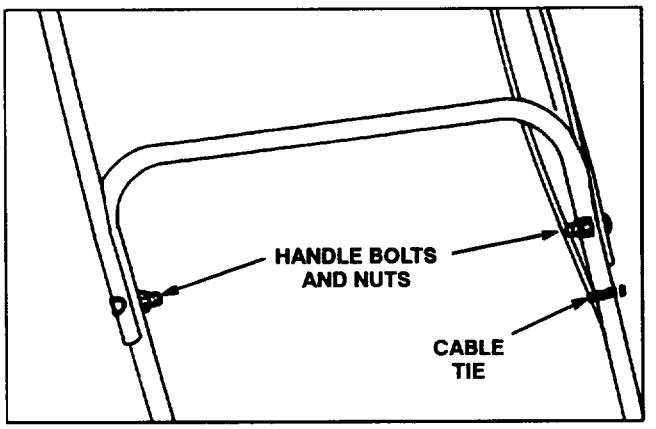

Figure 2

7. Make sure control cables are retained in tabs on cable bracket attached to rear of engine (Fig. 3). Fasten a cable tie around control cables as shown in Figure 3.

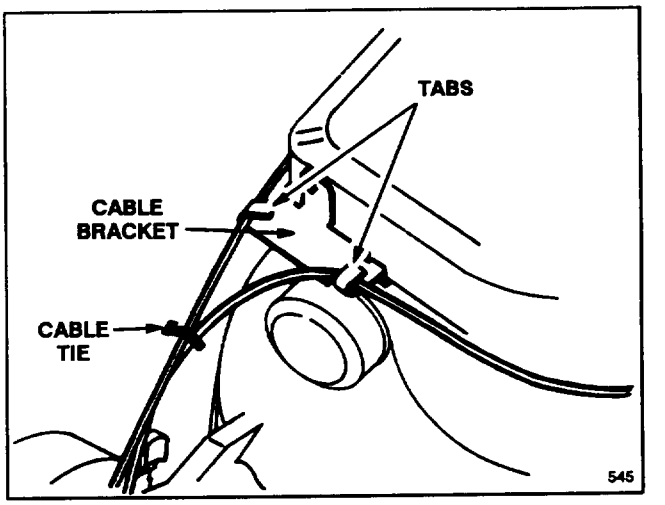

Figure 3

8. Secure control cables to left side of handle with a cable tie (Fig. 2).

9. Pull recoil rope through loop opening on handle (Fig. 4). By squeezing the control bar on handle, blade brake will release and allow rope to be pulled up easily to loop.

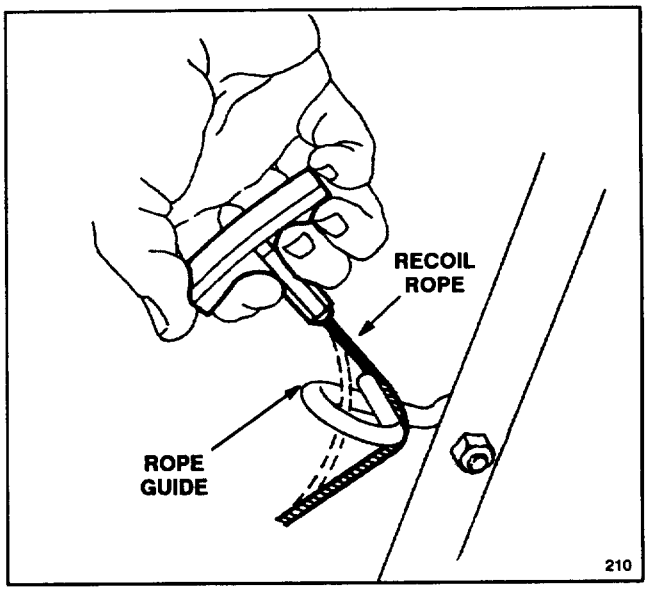

Figure 4

BEFORE OPERATING

FILL CRANKCASE WITH OIL (Fig. 5)

Fill crankcase with SAE 30 oil until oil level reaches FULL mark on dipstick as shown in Figure 5. The maximum crankcase capacity is 20 ounces (0.6 liters) of oil. Use any high quality detergent oil having the American Petroleum Institute (API) "service classification"—SE, SF or SG. 10W30 oil may be substituted if SAE 30 oil is not available. Use of multi–viscosity oils (10W30, etc.) above 40°F (40°C) will result in high oil consumption and possible engine damage. Check oil level more frequently if using these types of oils.

Before each use, ensure oil level is between ADD and FULL marks on dipstick. Add oil if level is low.

1. Position mower on level surface and clean around oil dipstick.

2. Remove dipstick by unscrewing it counterclockwise with your fingers or by inserting a screwdriver blade into slot on top of dipstick.

3. Wipe dipstick and insert it into filler neck. Rotate cap clockwise. Then rotate dipstick counterclockwise to remove it and check level of oil. If level is low, add only enough oil to raise level to FULL mark on dipstick. **DO NOT FILL ABOVE FULL MARK BECAUSE ENGINE COULD BE DAMAGED WHEN STARTED. POUR OIL SLOWLY.**

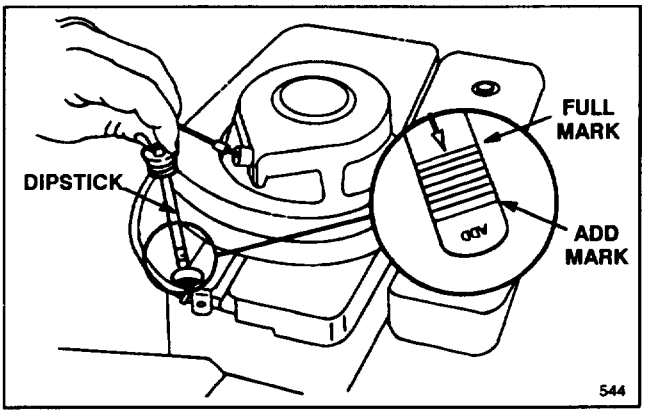

Figure 5

4. Insert dipstick into filler neck and rotate cap clockwise until dipstick is securely locked into filler neck.

Note: Check oil level each time mower is used or after every 5 operating hours. Initially, change oil after the first 2 hours of operation; thereafter, change oil after every 25 hours of operation. More frequent oil changes are required in dusty or dirty conditions.

⚠ WARNING

DANGER: Gasoline is extremely flammable and explosive under certain conditions. Do not smoke when handling fuel and keep fuel far away from open flames and sparks. Never buy more than a 30 day supply of gasoline. Store it in an approved container. Keep gasoline out of reach of children.

Refuel outdoors and only when engine is cold. Fill tank to within 1/4" to 1/2" (6 to 13 mm) from top of filler neck, not into filler neck. This space is for expansion of fuel. Use funnel or spout to prevent spilling. Wipe up any spilled gas.

FILL FUEL TANK WITH GASOLINE

Note: The Toro Company strongly recommends the use of fresh, clean, UNLEADED regular grade gasoline in Toro gasoline powered products. Unleaded gasoline burns cleaner, extends engine life, and promotes good starting by reducing the build–up of combustion chamber deposits. Leaded gasoline can be used if unleaded is not available.

Toro also recommends that Toro Stabilizer/Conditioner be used regularly in all Toro gasoline powered products during operation and storage seasons. Toro Stabilizer/Conditioner cleans the engine during operation and prevents gum–like varnish deposits from forming in the engine during periods of storage.

1. Clean around fuel tank cap and remove cap from tank (Fig. 6). Do not fill tank full. Using unleaded gasoline, fill fuel tank to within 1/4" to 1/2" (6 to 13 mm) from top of tank, not into the filler neck. This space is for expansion of fuel.

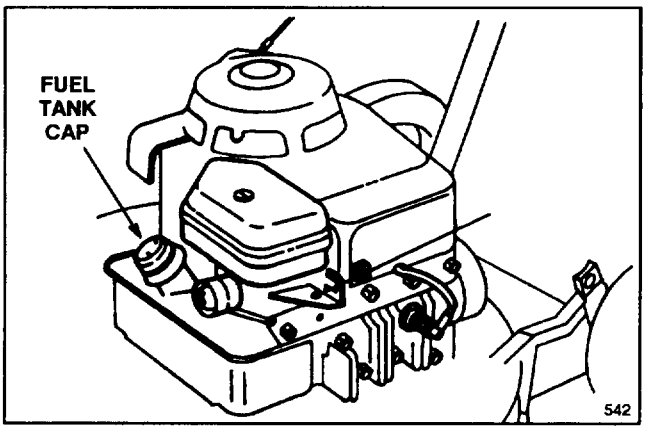

Figure 6

2. Install fuel tank cap and wipe up any spilled gasoline.

IMPORTANT: DO NOT MIX OIL WITH THE GASOLINE. NEVER USE METHANOL, GASOLINE CONTAINING METHANOL, GASOHOL CONTAINING MORE THAN 10% ETHANOL, PREMIUM GASOLINE OR WHITE GAS BECAUSE ENGINE FUEL SYSTEM DAMAGE COULD RESULT.

BEFORE OPERATING

DO NOT USE FUEL ADDITIVES OTHER THAN THOSE MANUFACTURED FOR FUEL STABILIZATION DURING STORAGE SUCH AS TORO'S STABILIZER/CONDITIONER OR A SIMILAR PRODUCT. TORO'S STABILIZER/CONDITIONER IS A PETROLEUM DISTILLATE BASED CONDITIONER/ STABILIZER. TORO DOES NOT RECOMMEND STABILIZERS WITH AN ALCOHOL BASE SUCH AS ETHANOL, METHANOL OR ISOPROPYL. ADDITIVES SHOULD NOT BE USED TO TRY TO ENHANCE THE POWER OR PERFORMANCE OF MACHINE.

RECYCLER®II MOWER TIPS

RECYCLER®II MOWER FEATURES

Your Toro Recycler®II has a new and completely different cutting concept; it leaves your lawn with a bagged look without bagging clippings.

The mower is equipped with special parts which increase your mower's ability to cut and recut grass clippings, leaves, and other yard debris into tiny particles which are injected down into the grass. These parts are:

- A special blade
- An "accelerator" mounted on the blade.
- Four special "kicker plates" positioned on the underside of the mower deck in strategic positions (Fig. 7)
- A steel deflector that covers discharge opening (an additional kicker is on the deflector)

The blade, accelerator, and four kicker plates are permanent parts of your mower. Remove the blade only for sharpening or replacement. Never remove the kickers, unless they need to be replaced.

⚠ WARNING

- **Operating mower without accelerator in place could cause blade to flex, bend or break.**
- **A broken blade could cause serious injury or death to operator or bystanders.**
- **Do not operate mower without accelerator.**

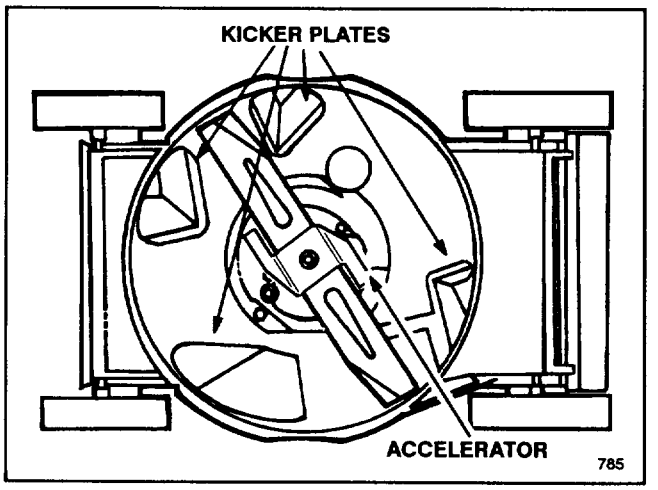

Figure 7

⚠ WARNING

- **Wet grass can cause you to slip and contact blade.**
- **Blade contact can seriously injure you.**
- **Mow only in dry conditions.**

TIPS FOR CUTTING GRASS CLIPPINGS

Even with the Recycler®II mower, you may encounter conditions where it is not possible to hide all of the grass clippings or leaves all of the time down in the lawn. Follow these instructions for the best cutting results and lawn appearance:

- Maintain a **sharp blade** throughout the cutting season. Periodically file down nicks on blade.
- Clean any residue from the underside of mower housing and kickers after each use. See Cleaning Mower Housing, page 10.
- When cutting grass over 6" tall, you may want to cut the lawn twice to hide clippings down in the grass.
- In the heat of the summer, it is best to cut grass at the C, D or E height-of-cut settings. Cut only about 1/3 of the grass blade. Cutting below the C setting is not recommended unless grass is sparse or it is late fall when grass growth begins to slow down. When cutting long grass, you may need to use a higher height–of–cut setting and a slower walking speed; then recut the grass at a more normal setting. If grass is too long and leaves clumps on top of lawn, mower may plug and cause engine to stall.
- Alternate mowing direction. This helps disperse clippings over lawn for even fertilization.

If the lawn appearance is not satisfactory after mowing, try one or more of the following:

- Sharpen the blade.
- Walk at a slower pace while mowing.
- Raise the height-of-cut setting on your mower.
- Cut your grass more frequently.
- Overlap cutting swaths instead of cutting a full swath with each pass.
- Mow across the marginal areas a second time.

RECYCLER®II MOWER TIPS

TIPS FOR CUTTING LEAVES

In the fall, use the Recycler®II mower to cut leaves up into finely cut particles which will be injected down into the grass. When spring arrives, the leaf particles will have decomposed and restored valuable nutrients to the soil.

- When cutting is complete, always be sure that 50% of the lawn shows through the finely cut leaf cover. This may require one or more passes over the leaves.
- Ensure leaves are dry.
- For light leaf coverage, mow with all wheels at the same height-of-cut setting.
- If there are more than 5" of leaves on lawn, set the front wheels one or two notches higher than the rear wheels. This makes it easier to feed leaves under mower deck.
- Walk at a slower mowing speed if leaves are not cut up finely enough to be hidden down in the grass.
- If you cut up a lot of oak leaves, you might want to add lime to your grass in the spring. Lime reduces the acidity of oak leaves.

OPERATING INSTRUCTIONS

STARTING AND STOPPING

1. CONTROLS—Throttle, engine kill control bar and recoil starter are on upper handle (Fig. 8).

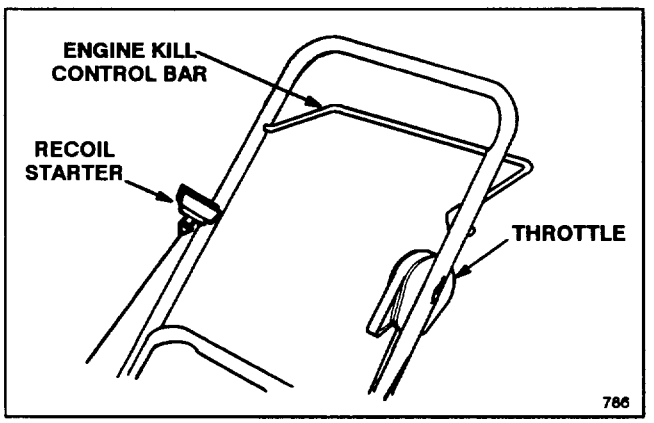

Figure 8

2. Push wire onto spark plug (Fig. 9).

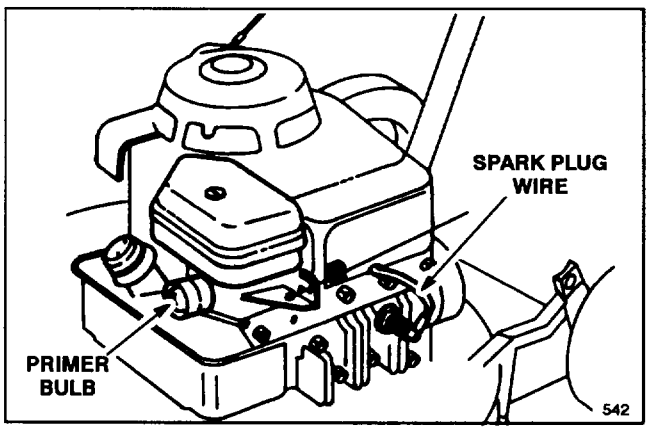

Figure 9

3. STARTING—Move throttle forward until it "snaps" into position 🐇 (FAST).

4. Push primer bulb (Fig. 9) three times to start.

Note: Priming is usually unnecessary when restarting a warm engine. However, cool weather may require priming to be repeated.

5. Squeeze control bar until it contacts handle. Pull recoil starter out until positive engagement results; then pull vigorously to start the engine. When engine starts, regulate throttle as desired between 🐇 (FAST) and 🐢 (SLOW).

6. STOPPING (Fig. 8)—Release control bar and stay behind handle until engine and blade stop. Pull wire off spark plug if mower will be unattended or not used.

ADJUSTING HEIGHT–OF–CUT

Five letters cast into the housing represent the height–of–cut settings (Fig. 10).

⚠ DANGER

- **Adjusting height–of–cut levers could bring hands into contact with moving blade.**
- **Contact with blade could cause serious personal injury.**
- **Do not adjust the height–of–cut settings when engine is running and blade is rotating.**
- **Do not put fingers under housing to lift mower when adjusting height–of–cut levers.**

1. Stop the engine.

2. For easier adjustment, lift housing up so wheel is off ground. **Do not put fingers under housing when lifting.** Squeeze adjusting lever toward wheel and move to desired setting (Fig. 10). Ensure pin on adjusting lever engages notch in housing. Adjust all wheels to the same setting.

OPERATING INSTRUCTIONS

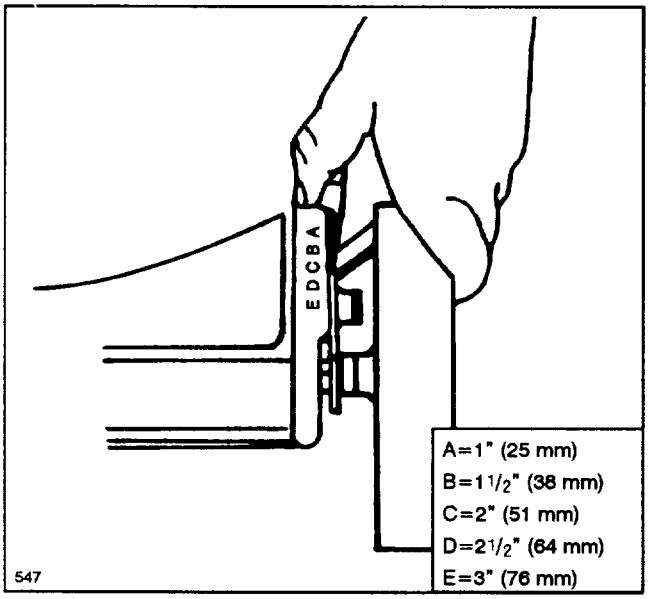

Figure 10

MAINTENANCE

⚠ CAUTION

- **Engine could start accidentally.**
- **Accidental starting of engine could cause serious injury to operator or bystanders.**
- **Pull wire off spark plug before performing any maintenance or adjustments.**

SERVICING AIR CLEANER

Normally, clean air cleaner after every 25 operating hours. More frequent cleaning is required when mower is operated in dusty or dirty conditions.

1. Stop engine and pull wire off spark plug (Fig. 12).

2. Remove screw from top of air cleaner. Lift off cover and clean cover thoroughly (Fig. 11).

3. Remove air cleaner cup from top of foam element (Fig. 11).

4. If foam element is dirty, remove it from air cleaner body (Fig. 11). Clean thoroughly.

A. WASH foam element in a solution of liquid soap and warm water. Squeeze to remove dirt, but do not twist because foam may tear. Rinse thoroughly in clear water.

B. DRY by wrapping in a clean rag. Squeeze rag and foam element to dry.

C. SATURATE element with approximately 5 ounces (150 ml) of SAE 30 or 10W30 engine oil. Squeeze element to remove excess oil and to distribute oil thoroughly. A damp element is desirable.

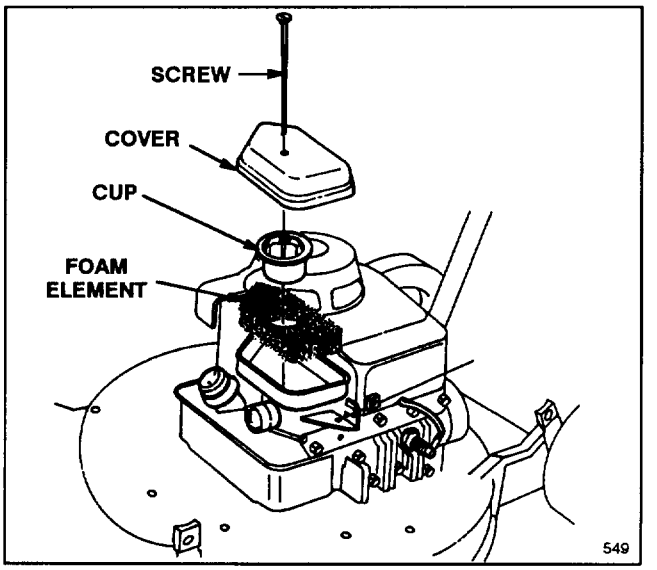

Figure 11

5. Reinstall foam element, air cleaner cup and air cleaner cover.

IMPORTANT: Do not operate engine without air cleaner element because extreme engine wear and damage will likely result.

MAINTENANCE

REPLACING SPARK PLUG

Use a CHAMPION J–19LM spark plug or equivalent. Correct air gap is 0.030" (0.76 mm). Remove plug after every 25 operating hours and check its condition.

1. Stop engine and pull wire off spark plug (Fig. 12).

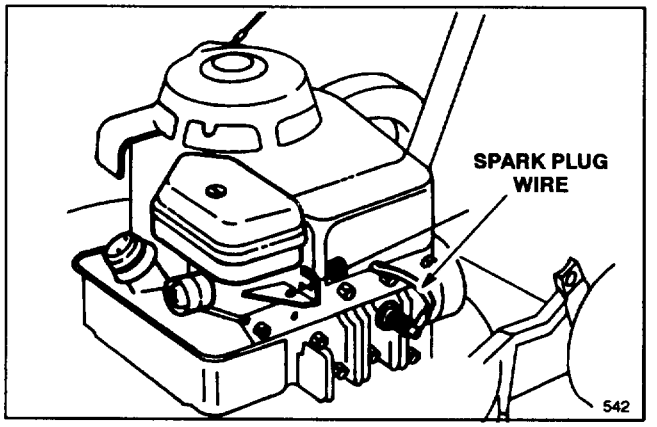

Figure 12

2. Clean around spark plug and remove plug from cylinder head.

IMPORTANT: Replace a cracked, fouled or dirty spark plug. Do not sand blast, scrape, or clean electrodes because engine damage could result from grit entering cylinder.

3. Set air gap at 0.030" (0.76 mm) (Fig. 13). Install correctly gapped spark plug and gasket seal. Tighten plug firmly to 14 ft–lb (19 N·m).

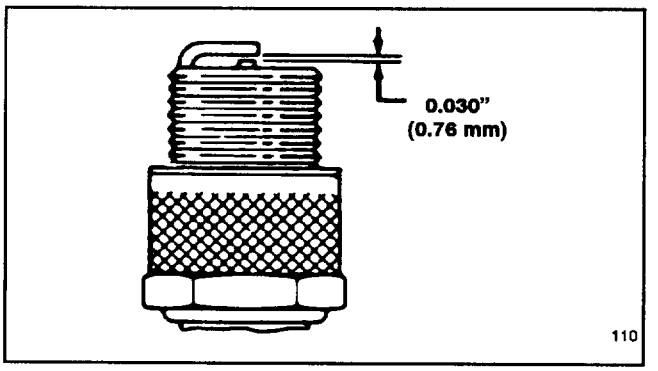

Figure 13

DRAINING GASOLINE

1. Stop engine and pull wire off spark plug (Fig. 12).

2. Remove cap from fuel tank and use pump–type syphon to drain fuel into clean gas can.

Note: This is the only procedure recommended for draining fuel.

CHANGING CRANKCASE OIL

Change oil after the first 2 operating hours and after every 25 hours thereafter. Since warm oil drains better and carries more contaminants than cold, run engine for a minute or so before draining oil.

1. Stop engine and pull wire off spark plug (Fig. 12).

2. Drain gasoline from fuel tank: refer to Draining Gasoline, page 8.

3. Tip mower on its right side (Fig. 14). Place a drain pan under mower.

4. Remove drain plug (Fig.14) from underside of mower using a $3/8$" female square drive.

5. Lower mower to allow oil to drain into pan.

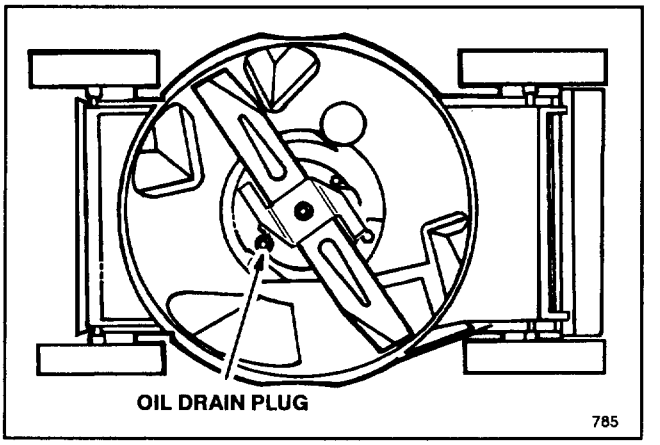

Figure 14

6. After draining, clean drain plug and reinstall it. Wipe up any spilled oil. Fill engine with fresh oil: refer to Fill Crankcase With Oil, page 4.

ADJUSTING THROTTLE

Throttle control adjustment may be required if engine does not start. Whenever a new throttle control cable is installed, throttle must be adjusted.

1. Stop engine and pull wire off spark plug (Fig. 12).

2. Move throttle backward to (SLOW) position.

3. Loosen cable clamp screw until throttle cable slides (Fig. 15).

4. Move throttle lever right or left until hole in throttle lever lines up with hole in throttle bracket (Fig. 15). Use an allen wrench, small drill or pin to hold alignment.

MAINTENANCE

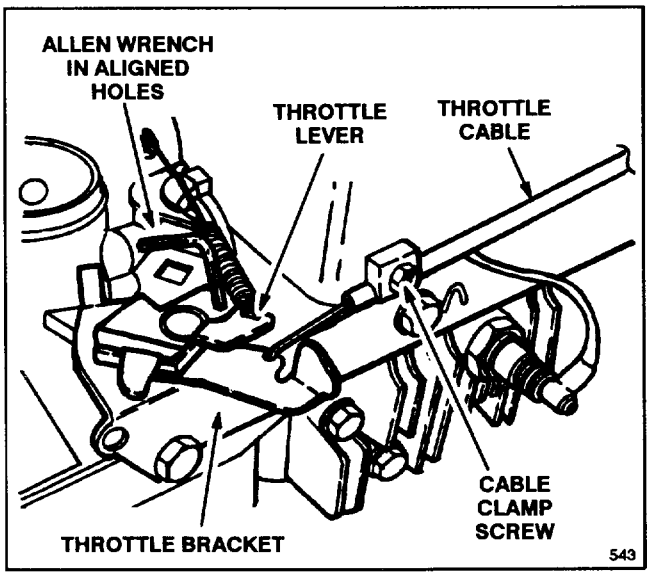

Figure 15

5. Tighten cable clamp screw to lock adjustment in place.

INSPECTING/REMOVING/SHARPENING BLADE

1. Stop engine and pull wire off spark plug (Fig. 12).

2. Drain gasoline from fuel tank; refer to Draining Gasoline, page 8.

3. Tip mower on its right side (Fig. 16). Avoid rotating blade as starting problems may result.

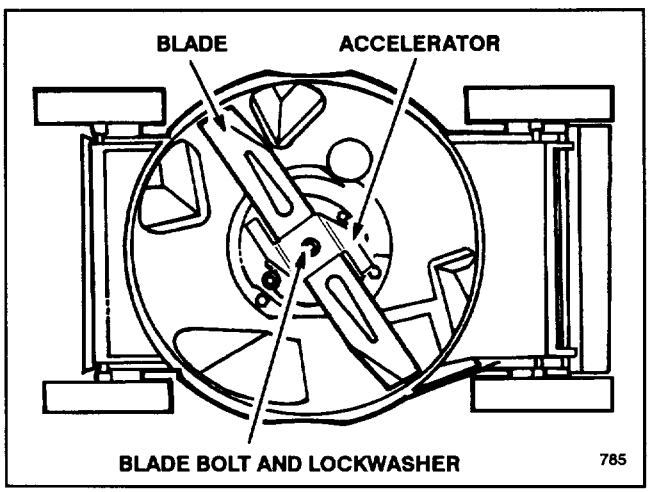

Figure 16

4. INSPECTING BLADE—Carefully examine blade for sharpness and wear, especially where flat and curved parts meet (Fig. 17A). Since sand and abrasive material can wear away the metal that connects the flat and curved parts of the blade, check blade before using the mower. If a slot or wear is noticed, (Fig. 17B & C), replace blade. Refer to step 5.

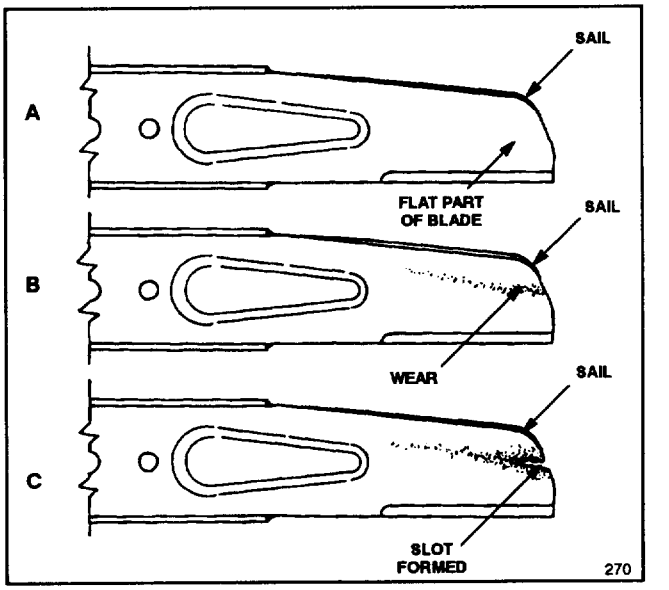

Figure 17

5. REMOVING BLADE—Grasp end of blade using a rag or thickly padded glove. Remove blade bolt, lockwasher, accelerator, and blade (Fig. 16).

NOTE: For best performance, install new blade before cutting season begins. During the year, file down small nicks to maintain the cutting edge.

⚠ DANGER

- **A worn or damaged blade could break and a piece of blade could be thrown into operator's or bystander's area.**
- **A thrown piece of blade could cause serious personal injury or death to operator or bystanders.**
- **Inspect blade periodically for wear or damage.**
- **Replace a worn or damaged blade.**

6. SHARPENING BLADE—Using a file, sharpen top side of blade (side facing mower housing) and maintain original cutting angle (Fig. 18). The blade will remain balanced if the same amount of material is removed from both cutting edges.

IMPORTANT: Check balance of blade by putting it on a blade balancer. An inexpensive balancer can be purchased at a hardware store. A balanced blade will stay in a horizontal position and an unbalanced blade will settle to the heavy side. If the blade is not balanced, file more metal off cutting edge on heavy end of blade.

MAINTENANCE

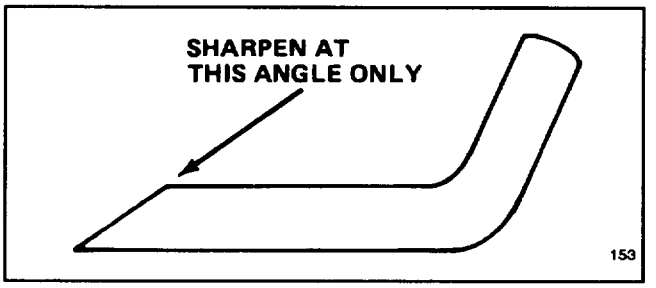

Figure 18

7. Install sharp, balanced blade with blade bolt and lockwasher. Sail part of blade must point toward top of mower housing to ensure correct installation. Tighten the blade bolt to 50 ft–lb (68 N·m).

⚠ WARNING

- **Operating mower without accelerator in place could cause blade to flex, bend or break.**
- **A broken blade could cause serious injury or death to operator or bystanders.**
- **Do not operate mower without accelerator.**

CLEANING MOWER HOUSING

To ensure best performance, keep underside of mower housing clean.

1. Stop engine and pull wire off spark plug (Fig. 12).

2. Drain gasoline from fuel tank: refer to Draining Gasoline, page 8.

3. Tip mower on its right side (Fig. 19). Avoid rotating blade as starting problems may result.

4. Remove dirt and grass clippings that stick to housing by scraping it with a hardwood scraper. Avoid burrs and sharp edges.

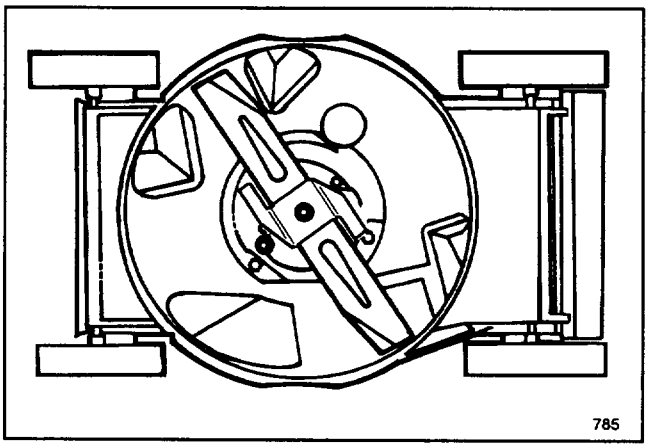

Figure 19

PREPARING MOWER FOR STORAGE

1. For long term storage, either drain gasoline from fuel tank or add a fuel stabilizer to the gasoline. To drain gasoline, refer to Draining Gasoline, page 8. After fuel is drained, start engine and let it idle until all fuel is consumed and engine stops. Repeat the starting procedure two more times to assure all gas is removed from the engine. If gasoline is not drained, gum–like varnish deposits will form and cause poor engine operation, even starting problems.

Fuel can be left in gas tank only if a fuel additive, such as Toro's Stabilizer/Conditioner, is added to gasoline and run through engine before storing. Toro's Stabilizer/Conditioner is a petroleum distillate based conditioner/stabilizer. Toro does not recommend stabilizers with an alcohol base, such as ethanol, methanol or isopropyl. Use fuel additive in recommended quantities as specified on container.

Under normal conditions, all fuel additives remain effective in fuel for 6–8 months.

2. Remove spark plug and pour 2 tablespoons of SAE 30 or 10W30 oil into hole in cylinder. Pull starter rope slowly to coat inside of cylinder. Install spark plug and tighten to 14 ft–lb (19 N·m). **DO NOT INSTALL WIRE ON SPARK PLUG.**

3. Clean underside of mower housing: refer to Cleaning Mower Housing, page 10.

4. Check condition of blade: refer to Inspecting/Removing/Sharpening Blade, page 9.

5. Tighten all nuts, bolts, and screws.

6. Clean dirt and chaff from cylinder, cylinder head fins, and blower housing. Also remove grass clippings, dirt, and grime from external parts of the engine, shrouding, and top of mower housing.

7. Clean air cleaner: refer to Servicing Air Cleaner, page 7.

8. Touch up all rusted or chipped paint surfaces. Toro Re–Kote paint is available from an Authorized TORO Service Dealer.

9. Store mower in a clean, dry place. Cover mower to keep it clean and protected.

OPTIONAL EQUIPMENT

1. **Rear Bagging Kit, Model No. 59279**—Install discharge tunnel and rear mounting grass bag to convert the Recycler®II mower to a rear bagging mower (Fig. 20). Includes discharge tunnel plug.

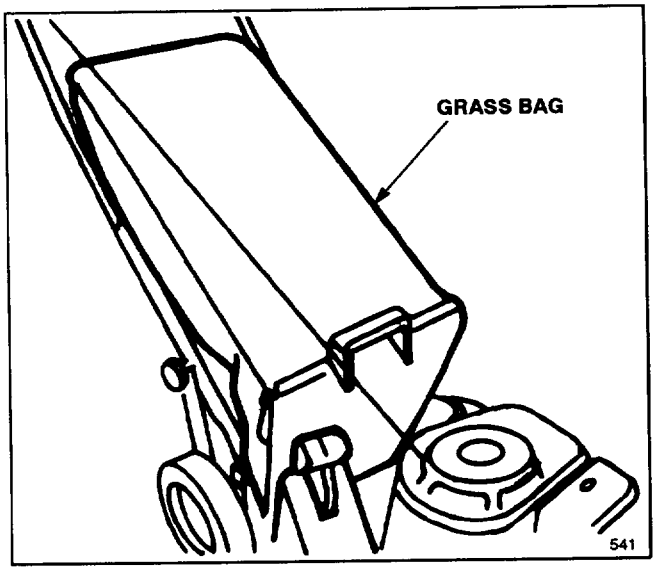

Figure 20

2. **Side Discharge Kit, Model No. 59289**—Install discharge tunnel and rear mounted side discharge chute to convert the Recycler®II mower to a side discharge mower (Fig. 21). Includes discharge tunnel plug.

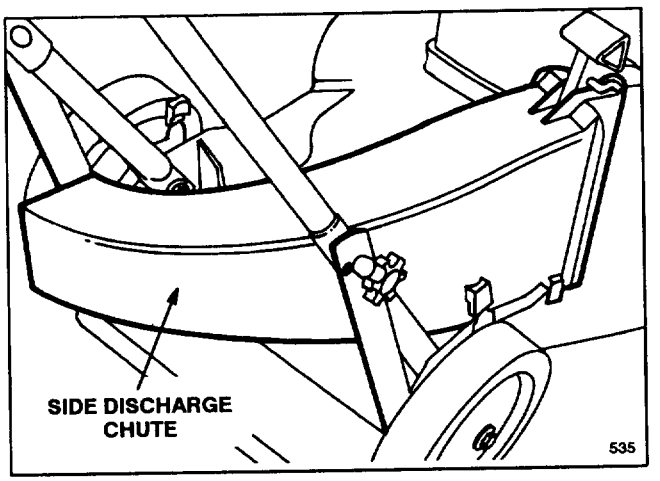

Figure 21

3. **Spark Arrestor, Briggs & Stratton Part No. 398067**—If a spark arrestor is required because of local, state, or federal regulations, it may be purchased at your local Authorized TORO Service Dealer. If mower is operated on any California forest, brush, or grass covered land without a properly operating spark arrestor, the operator is violating state law, Section 4442 Public Resources Code.

PRODUCT IDENTIFICATION

A model and a serial number decal is located on the rear of the mower housing. Always refer to specific numbers on this decal in correspondence or when replacement parts are needed.

TORO SERVICE SUPPORT

If help – concerning safety, set–up, operation, maintenance, or troubleshooting – is ever needed, contact the local Authorized TORO Service Dealer or Distributor. Refer to the "Yellow Pages" for assistance. In addition to skilled service technicians, the dealer and distributor have factory approved accessories and replacement parts. Keep your Toro all TORO. Buy genuine TORO replacement parts and accessories.

TORO Consumer Products

THE TORO TOTAL COVERAGE GUARANTEE

A Full Two–Year Warranty
(Limited Warranty for Commercial Use)

What Is Covered By This Express Warranty?

The Toro Company promises to repair any TORO Product used for residential purposes if defective in materials or workmanship for a period of two years from the date of purchase. The cost of parts and labor are included, but the customer pays the transportation costs.

Transportation within a 15 mile radius of the servicing dealer is covered under this warranty for two–stage snowthrowers, walk behind debris equipment and all TORO Wheel Horse riding products. Walk power mowers, single stage snowthrowers, and other products not specifically covered, are excluded from the transportation coverage provided by this warranty.

What Products Are Covered By This Warranty?

This warranty applies to all gasoline powered Consumer Products (including TORO Wheel Horse riding products). ProLine riding products, wide area walk behind mowers and 21" Commercial mowers without blade stop controls are covered by separate warranty statements.

How About Commercial Use?

TORO Consumer Products used for commercial, institutional or rental use are covered by a limited warranty for the following time periods from the date of purchase:

Products	Warranty Period
• Garden Tractors	
Chassis	1 year limited warranty
Engine	2 year limited warranty
• 21" Commercial Duty Walk Mower with blade stop controls	1 year limited warranty
• Lawn Tractors, Yard Tractors, Rear Engine Riders, 3.0 and 3.5 HP Edgers, Straight Shaft Trimmers, and Backpack Blowers	90 day limited warranty
• All Others	45 day limited warranty

How Do You Get Warranty Service?

Should you feel your TORO product contains a defect in material or workmanship, contact the dealer who sold you the product or any Authorized TORO Service Dealer or TORO Master Service Dealer. The Yellow Pages of your telephone directory is a good reference source. The dealer will either arrange service at his/her dealership or recommend another Authorized Service Dealer who may be more convenient. You may need proof of purchase (copy of registration card, sales receipt, etc.) for warranty validation.

If for any reason you are dissatisfied with the Service Dealer's analysis of the defect in materials or workmanship or if you need a referral to a TORO Service Dealer, please feel free to contact us at the following address:

Toro Customer Service Department
8111 Lyndale Avenue South
Bloomington, MN 55420–1196
612–888–8801

What Must You Do To Keep The Warranty In Effect?

You must maintain your TORO Product by following the maintenance procedures described in the operator's manual. Such routine maintenance, whether performed by a dealer or by you, is at your expense.

What Does This Warranty Not Cover? and How Does Your State Law Relate To This Warranty?

There is no other express warranty except the TORO Starting Guarantee on GTS Engines. This express warranty does not cover:

- Cost of regular maintenance service or parts, such as filters, fuel, lubricants, tune–up parts, blade sharpening, brake and clutch adjustments.
- Any product or part which has been altered or misused or required replacement or repair due to normal wear, accidents, or lack of proper maintenance.
- Repairs necessary due to improper fuel, contaminants in the fuel system, or failure to properly prepare the fuel system prior to any period of non–use over three months.
- Pickup and delivery charges for distances beyond a 15 mile radius from an Authorized TORO Service Dealer (covered products only).

All repairs covered by this warranty must be performed by an Authorized TORO Service Dealer using Toro approved replacement parts.

Repair by an Authorized TORO Service Dealer is your sole remedy under this warranty.

The Toro Company is not liable for indirect, incidental or consequential damages in connection with the use of the TORO Products covered by this warranty, including any cost or expense of providing substitute equipment or service during reasonable periods of malfunction or non–use pending completion of repairs under this warranty. Some states do not allow exclusions of incidental or consequential damages, so the above exclusion may not apply to you.

This warranty gives you specific legal rights, and you may also have other rights which vary from state to state.

COUNTRIES OTHER THAN THE UNITED STATES OR CANADA

Customers who have purchased TORO products exported from the United States or Canada should contact their TORO Distributor (Dealer) to obtain guarantee policies for your country, province, or state. If for any reason you are dissatisfied with your Distributor's service or have difficulty obtaining guarantee information, contact the TORO importer. If all other remedies fail, you may contact us at The Toro Company.