FORM NO. 3320–817

TORO®

MODEL NO. 20435WF – 3900001 & UP
MODEL NO. 20436WF – 3900001 & UP

OPERATOR'S MANUAL

# 21" RECYCLER® II SUPER PRO®
MOWER

## ⚠ SAFETY INSTRUCTIONS

**This mower meets or exceeds CPSC blade safety requirements for walk behind rotary mowers and the B71.1-1990 specifications of the American National Standards Institute. However, improper use or maintenance by the operator or owner can result in injury. To reduce the potential for injury, comply with these safety instructions and always pay attention to the safety alert symbol ⚠ which means CAUTION, WARNING or DANGER. Failure to comply with these instructions may result in personal injury.**

**WARNING:** Engine exhaust contains carbon monoxide which is an odorless, deadly poison. Carbon monoxide is also known to the State of California to cause birth defects. Do not run engine indoors or in an enclosed area.

### BEFORE OPERATING

**1.** Read this manual carefully before operating the mower. Become familiar with the controls and proper use of the mower. Never allow children to operate the mower or adults to operate it without proper instructions.

**2.** Keep everyone, especially children and pets, away from area of operation. Thoroughly inspect area where mower will be used and remove sticks, stones, wire, and debris.

**3.** Wear long pants and substantial shoes. Do not operate mower while wearing open–toed shoes, jewelry, loose clothing or when barefoot.

**4.** Always wear safety glasses or eye shields during operation to protect eyes from foreign objects that may be thrown from the machine.

**5.** Check fuel level before starting engine. Because fuel is highly flammable, handle it carefully.

**A.** Use an approved fuel container.

**B.** Fill fuel tank outdoors, not indoors. **NEVER ADD FUEL TO AN ENGINE THAT IS RUNNING OR HOT.**

**C.** Install gas cap on fuel container and gas tank, and wipe up any spilled gasoline before starting engine.

**6.** Keep all guards, shields, safety devices, cover–deflector assembly, optional grass catcher, optional side discharge chute or optional discharge tunnel plug in place. Repair or replace damaged parts, including decals. Check all safety devices before each use.

**7.** Traction drive (self–propelled model), blade, and engine are designed to stop when control bar is released. Ensure engine kill control bar and brake function properly before each use of mower.

**8.** Disengage the self–propelled mechanism or drive clutch (self–propelled model) before starting the engine.

### WHILE OPERATING

**9.** Do not run engine indoors.

**10.** Always maintain secure footing. Keep a firm grip on the handle and walk; never run. Never operate mower in wet grass. Mow only in daylight or in good artificial light.

**11.** Mow across the face of slopes; never up and down. Use extreme caution when changing direction on slopes. Do not mow excessively steep slopes.

**12.** Keep face, hands, and feet away from the mower housing and cutter blade when the engine is running. Stay behind the handle until the engine stops.

**13.** Since the blade rotates for a few seconds after the control bar is released, stay behind the handle until all moving parts stop.

**14.** After striking a foreign object or if mower vibrates abnormally, stop engine and remove wire from spark plug. Check mower for damage and make all repairs before using mower again.

**15.** Stop engine before adjusting the height–of–cut.

**16.** Stop engine when crossing a gravel driveway, road, or sidewalk.

**17.** Stop engine before leaving the operator's position—behind the handle. Disconnect wire from spark plug if mower will be unattended.

**18.** Do not touch any engine components while it is running or shortly after it is stopped because engine will be hot enough to cause a burn.

**19.** Refuel only when engine is cool.

©The Toro Company-1992

# SAFETY INSTRUCTIONS

## MAINTENANCE AND STORAGE

**20.** Perform only those maintenance instructions described in this manual. If major repairs are ever needed or if assistance is desired, contact your local Authorized TORO Service Dealer.

**21.** Before mower is cleaned, inspected, serviced, or adjusted, stop engine and disconnect wire from spark plug. Keep wire away from plug to prevent accidental starting.

**22.** To ensure the mower is in safe operating condition, frequently check and keep all nuts, bolts, and screws tight. Ensure blade bolt is tightened to 50 ft–lb (68 N·m).

**23.** To reduce fire hazard, keep engine free of excessive grease, grass, leaves, and accumulations of dirt.

**24.** Allow engine to cool before storing mower in any enclosure. Do not store mower with gasoline in fuel tank near any open flame or where gasoline fumes may be ignited by a spark.

**25.** Do not overspeed the engine by changing governor settings.

**26.** At the time of manufacture, the mower conformed to the safety standards in effect for rotary mowers. To assure best performance and continued safety certification of the mower, use genuine TORO replacement parts and accessories. Replacement parts and accessories made by other manufacturers may result in non–conformance with the safety standards, and that could be dangerous.

# SAFETY SYMBOL GLOSSARY


Safety alert


Keep hands and feet away from rotating blade


Keep hands and feet away from blade


Fast


Slow


Choke on



Stop engine before leaving operator position


Keep all guards in place


Read and understand operator's manual



Keep bystanders from area being mowed

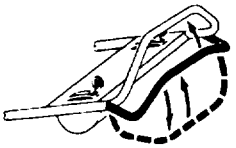
Squeeze control bar against handle to drive

# TABLE OF CONTENTS


| | Page |
|---|---|
| Set–Up Instructions | 3 |
| Before Operating | 4 |
| Recycler® II Super Pro® Mower Tips | 5 |
| Operating Instructions | 6 |
| Maintenance | 8 |
| Servicing Air Cleaner | 8 |
| Replacing Spark Plug | 8 |
| Draining Gasoline | 9 |
| Adjusting Throttle | 9 |
| Changing Crankcase Oil | 9 |
| Adjusting Wheel Drive | 10 |
| Inspecting/Removing/Sharpening Blade | 10 |
| Lubrication | 11 |
| Adjusting Blade Brake | 11 |
| Cleaning Mower Housing | 12 |
| Preparing Mower For Storage | 12 |
| Product Identification | 13 |
| Toro Service Support | 13 |
| Optional Equipment | 13 |
| The Toro Starting Guarantee | 14 |
| Guaranteed To Start Maintenance Record | 16 |
| The Toro Total Coverage Guarantee | |

# SET–UP INSTRUCTIONS

**Note:** Determine left and right hand sides of the unit by standing in the operator's position.

## INSTALL HANDLE

**1.** The mowers are shipped from the factory with filler between the upper and lower handle joints to prevent shipping and assembly damage. Align upper and lower handles and remove the filler with a pliers.

**2.** The left handle knob is shipped from the factory on the outside of the handle (Fig. 1). Remove the left knob and bolt. Reinstall knob and bolt on inside of handle (Fig. 2). Both handle knobs should be positioned on the inside of the handles. Tighten handle knobs.

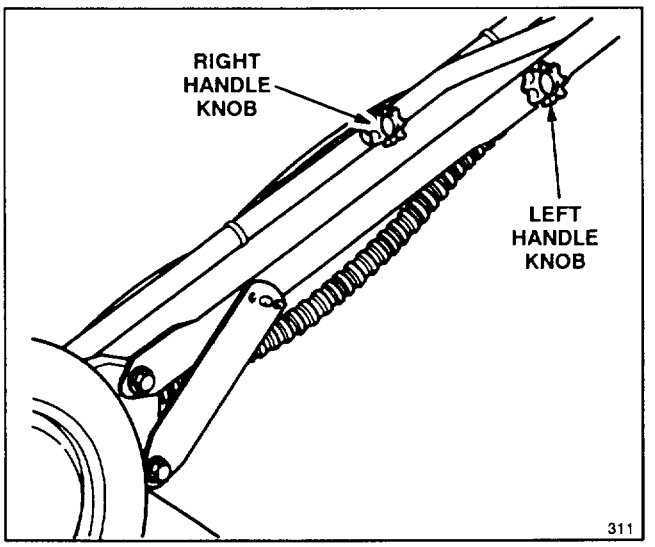


Self–propelled model shown

**Figure 1**

**3.** Move handle latches slightly outward so they will not be in the way when pivoting the handle backward into the operating position (Fig. 2).

**4.** Pivot handle backward. Move handle latches inward while snapping handle stud into center hole of handle latch (Fig. 2). If a handle latch does not fit tightly against the handle tube, remove latch from handle stud, bend the latch inward, and reattach to handle stud. Repeat as necessary to ensure a tight fit between latch and handle. Make sure handle knobs are securely tightened.

**Note:** If handle height is not satisfactory, adjust by placing handle stud (Fig. 2) into a different hole. Tighten handle knobs.

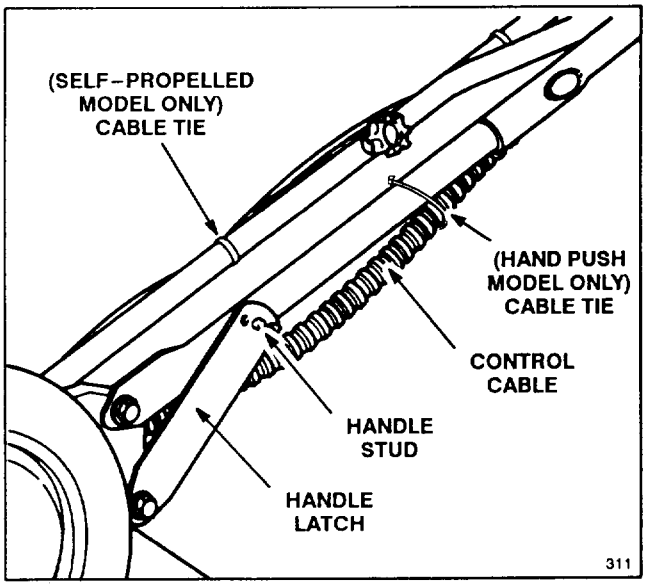


**Figure 2**

**5.** Ensure control cables (Fig. 2) are to the rear and inside of handles. Secure control cables in position with cable ties (Fig. 2).

**6.** Pull starter rope through rope guide on handle. By squeezing control bar to handle, blade brake will release and allow rope to be pulled up easily to loop.

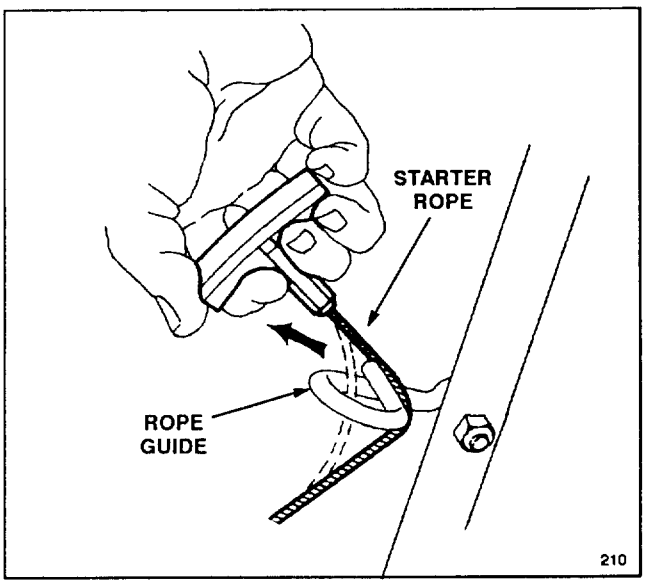


**Figure 3**

# BEFORE OPERATING

## FILL CRANKCASE WITH OIL

Initially, crankcase must be filled with 20 ounces (0.6 liters) of SAE 30 oil. 10W–30 oil may be substituted if SAE 30 is not available. Use any high quality detergent oil having the American Petroleum Institute (API) "service classification"—SE, SF or SG.

Before each use, ensure oil level is between FULL and ADD marks on dipstick (Fig. 4). Add oil if level is low.

1. Position mower on level surface and clean around oil dipstick.

2. Remove dipstick by rotating cap counterclockwise 1/4 turn.

3. Wipe dipstick and insert it into filler neck. Rotate cap clockwise 1/4 turn. Then remove dipstick and check level of oil on side of dipstick with FULL and ADD marks (Fig. 4). If level is low, add only enough oil to raise level to FULL mark on dipstick. **DO NOT FILL ABOVE FULL MARK BECAUSE ENGINE COULD BE DAMAGED WHEN STARTED. POUR OIL SLOWLY.**

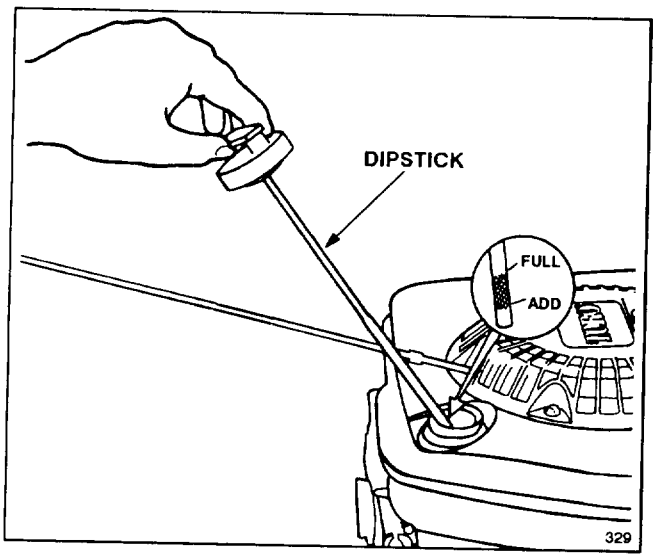


**Figure 4**

4. Insert dipstick into filler neck and rotate cap clockwise 1/4 turn to lock.

**Note:** Check oil level each time mower is used or after every 5 operating hours. Initially, change oil after the first 2 hours of operation; thereafter, change oil after every 25 hours of operation. More frequent oil changes are required in dusty or dirty conditions.

### ⚠ WARNING

**DANGER: Gasoline is extremely flammable and explosive under certain conditions. Do not smoke when handling fuel and keep fuel far away from open flames and sparks. Never buy more than a 30 day supply of gasoline. Store it in an approved container. Keep gasoline out of reach of children.**

**Refuel outdoors and only when engine is cold. Do not fill tank full. Fill tank to within 1/4" to 1/2" (6 to 13 mm) from top of tank, not into filler neck. This space is for expansion of fuel. Use funnel or spout to prevent spilling. Wipe up any spilled gas.**

## FILL FUEL TANK WITH GASOLINE

**Note**: The Toro Company strongly recommends the use of fresh, clean, **UNLEADED** regular grade gasoline in Toro gasoline powered products. Unleaded gasoline burns cleaner, extends engine life, and promotes good starting by reducing the build–up of combustion chamber deposits. Leaded gasoline can be used if unleaded is not available.

1. Clean around fuel tank cap and remove cap from tank. Using unleaded gasoline, fill fuel tank to within 1/4" to 1/2" (6 to 13 mm) from top of tank, not into filler neck. Do not fill tank full.

2. Install fuel tank cap and wipe up any spilled gasoline.

Toro also recommends that Toro Stabilizer/Conditioner be used regularly in all Toro gasoline powered products during operation and storage seasons. Toro Stabilizer/Conditioner cleans the engine during operation and prevents gum–like varnish deposits from forming in the engine during periods of storage.

**IMPORTANT: DO NOT MIX OIL WITH THE GASOLINE. NEVER USE METHANOL, GASOLINE CONTAINING METHANOL, GASOHOL CONTAINING MORE THAN 10% ETHANOL OR WHITE GAS BECAUSE ENGINE FUEL SYSTEM DAMAGE COULD RESULT.**

**DO NOT USE FUEL ADDITIVES OTHER THAN THOSE MANUFACTURED FOR FUEL STABILIZATION DURING STORAGE SUCH AS TORO'S STABILIZER/CONDITIONER OR A SIMILAR PRODUCT. TORO'S STABILIZER/CONDITIONER IS A PETROLEUM DISTILLATE BASED CONDITIONER/STABILIZER. TORO DOES NOT RECOMMEND STABILIZERS WITH AN ALCOHOL BASE SUCH AS ETHANOL, METHANOL OR ISOPROPYL. ADDITIVES SHOULD NOT BE USED TO TRY TO ENHANCE THE POWER OR PERFORMANCE OF MACHINE.**

# RECYCLER® II SUPER PRO® MOWER TIPS

## RECYCLER® II SUPER PRO® MOWER FEATURES

Your Toro Recycler® II Super Pro® mower has a new and completely different cutting concept; it leaves your lawn with a bagged look without bagging clippings.

The mower is equipped with special parts which increase your mower's ability to cut and recut grass clippings, leaves, and other yard debris into tiny particles which are injected down into the grass. These parts are:

- A special blade and accelerator
- Three special "kicker plates" positioned on the underside of the mower deck in strategic positions (Fig. 5)

The blade and three kicker plates are permanent parts of your mower. Remove the blade only for sharpening or replacement. Never remove the kickers, unless they need to be replaced.

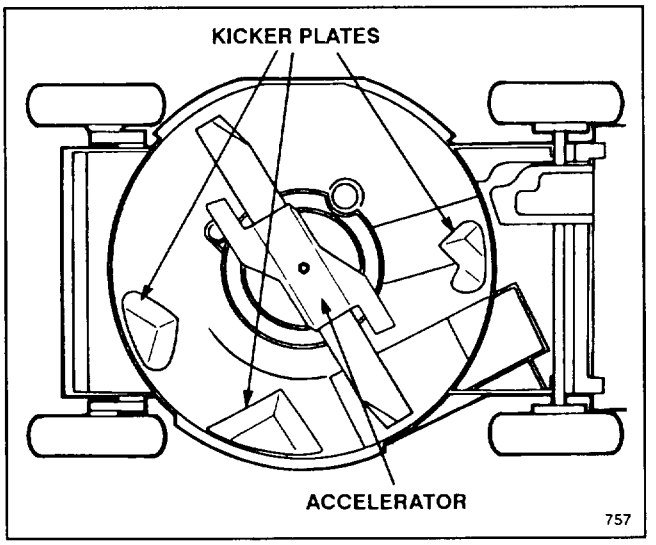


Self–propelled model shown

**Figure 5**

**⚠ WARNING**

- **Wet grass can cause you to slip and contact blade.**
- **Blade contact can seriously injure you.**
- **Mow only in dry conditions.**

## TIPS FOR CUTTING GRASS CLIPPINGS

Even with the Recycler®II Super Pro® mower, you may encounter conditions where it is not possible to hide all of the grass clippings or leaves all of the time down in the lawn. Follow these instructions for the best cutting results and lawn appearance:

- Maintain a **sharp blade** throughout the cutting season. Periodically file down nicks on blade.
- Clean any residue from the underside of mower housing and kickers after each use. See Cleaning Mower Housing, page 12.
- When cutting grass over 6" tall, you may want to cut the lawn twice to hide clippings down in the grass.
- In the heat of the summer, it is best to cut grass at the C, D or E height-of-cut settings. Cut only about 1/3 of the grass blade. Cutting below the C setting is not recommended unless grass is sparse or it is late fall when grass growth begins to slow down. When cutting long grass, you may need to use a higher height–of–cut setting and a slower walking speed; then recut the grass at a more normal setting. If grass is too long and leaves clumps on top of lawn, mower may plug and cause engine to stall.
- Alternate mowing direction. This helps disperse clippings over lawn for even fertilization.

If the lawn appearance is not satisfactory after mowing, try one or more of the following:

- Always mow with a sharp blade. A sharp blade cuts cleanly and without tearing or shredding the grass blades like a dull blade.
- Walk at a slower pace while mowing.
- Raise the height-of-cut setting on your mower.
- Cut your grass more frequently.
- Overlap cutting swaths instead of cutting a full swath with each pass.
- Mow across the marginal areas a second time.
- Set height–of–cut on front wheels one notch lower than rear wheels. (example: set front wheels at "C" setting and rear wheels at "D" setting)

## TIPS FOR CUTTING LEAVES

In the fall, use the Recycler® II Super Pro® mower to cut leaves up into finely cut particles which will be injected down into the grass. When spring arrives, the leaf particles will have decomposed and restored valuable nutrients to the soil.

- When cutting is complete, always be sure that 50% of the lawn shows through the finely cut leaf cover. This may require one or more passes over the leaves.
- Ensure leaves are dry.
- If there are more than 5" of leaves on lawn, set the front wheels one or two notches higher than the rear wheels. This makes it easier to feed leaves under mower deck.
- Walk at a slower mowing speed if leaves are not cut up finely enough to be hidden down in the grass.
- If you cut up a lot of oak leaves, you might want to add lime to your grass in the spring. Lime reduces the acidity of oak leaves.

# OPERATING INSTRUCTIONS

## STARTING, STOPPING, AND SELF–PROPELLING (self–propelled model only)

1. CONTROLS—Throttle, ground speed control (self–propelled model), control bar, and fingertip starter are on upper handle (Figs. 6 & 7).

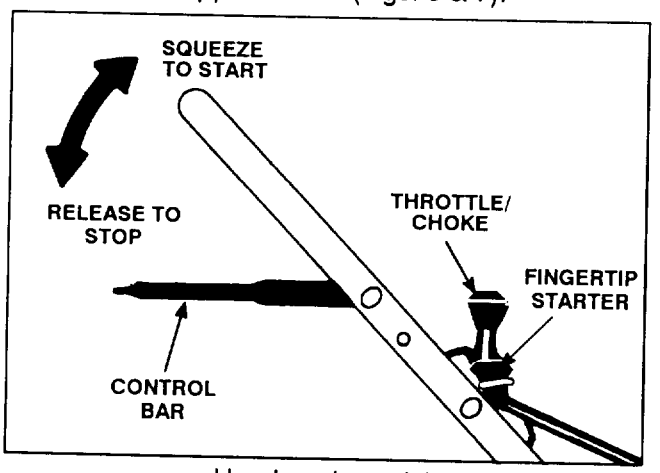


Hand push model

**Figure 6**

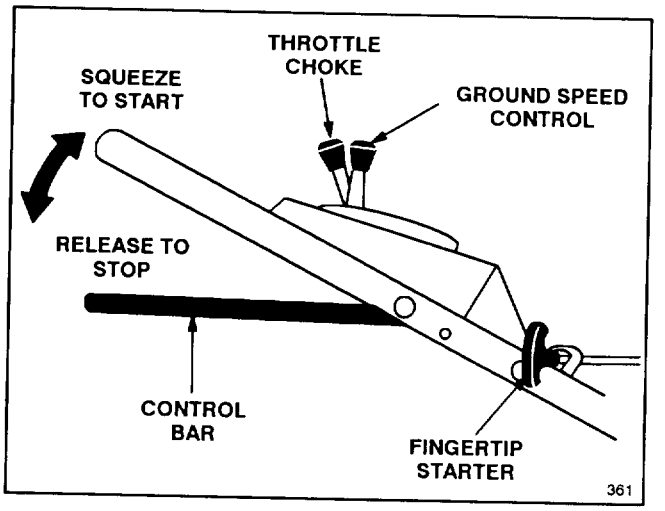


Self–propelled model

**Figure 7**

2. Push spark plug wire onto spark plug (Fig. 13).

3. STARTING—Move ground speed control to "N" (self–propelled model only) and throttle to CHOKE. Lift control bar to handle and hold. Pull fingertip starter out until positive engagement results; then pull vigorously to start the engine. When engine starts, remove throttle from CHOKE and regulate engine speed as desired.

4. GROUND SPEED/SELF–PROPEL OPERATION (self–propelled model only) (Fig. 8)—Move control bar to the RUN/SHIFT position. Move ground speed control to desired setting. Number "1" is slow, "2" is medium, and "3" is a fast walking pace. Move ground speed control to "N" when using the mower for trimming and whenever leaving mower.

To engage the self–propel drive, squeeze the control bar against the handle to the RUN/DRIVE position (Fig. 8). Ground speed varies depending on space between control bar and handle.

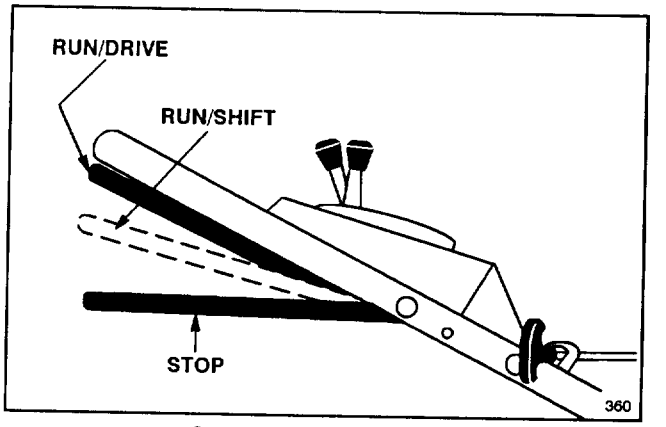


Self–propelled model

**Figure 8**

**Note:** The drive wheels are equipped with freewheeling clutches which enable the mower to be pulled rearward easier when the wheel drive is disengaged. To disengage the clutches, mower must be pushed forward at least 1" after wheel drive operation has stopped.

5. STOPPING—To stop engine, release control bar. Pull wire off spark plug if mower will be unattended or not used.

## SETTING HEIGHT–OF–CUT

Toro's exclusive SmartWheel™ provides a simple method for determining the proper cutting height.

The SmartWheel has two cutting scales — SPARSE/NORMAL and LUSH — to ensure the best height–of–cut setting in any mowing condition. Use the SPARSE/NORMAL scale during the warm summer season for the majority of your mowing. The LUSH scale is for thick, moist, succulent grass that grows most often in the spring.

In general, it is recommended that:

- Grass length should usually be cut at the C, D or E settings or maintained at two to three inches in height.
- Cutting below the C setting is not recommended unless grass is sparse or it is late fall when grass growth begins to slow down. When cutting long grass, you may need to use a higher height–of–cut setting and a slower walking speed; then recut the grass at a more normal setting. If grass is too long and leaves clumps on top of lawn, mower may plug and cause engine to stall.
- The SmartWheel calculates the proper setting to ensure that no more than 1/3 of the grass blade is cut off.

# OPERATING INSTRUCTIONS

## ⚠ DANGER

- **Adjusting height–of–cut levers could bring hands into contact with moving blade.**
- **Contact with moving blade could cause serious personal injury.**
- **Do not adjust height–of–cut settings when engine is running and blade is rotating.**
- **Do not put fingers under housing to lift mower when adjusting height–of–cut levers.**

**1.** Before starting the engine and beginning to mow, push the mower into the grass. Stop when the words SPARSE/NORMAL and LUSH are upright on the SmartWheel design on the rear left wheel (Fig. 9).

**2.** Using the color coded SmartWheel design (Fig. 9), compare the tips of the grass blades to the colors/letters on the wheel. Whichever color/letter the tips of the grass blades correspond with is the proper cutting height.

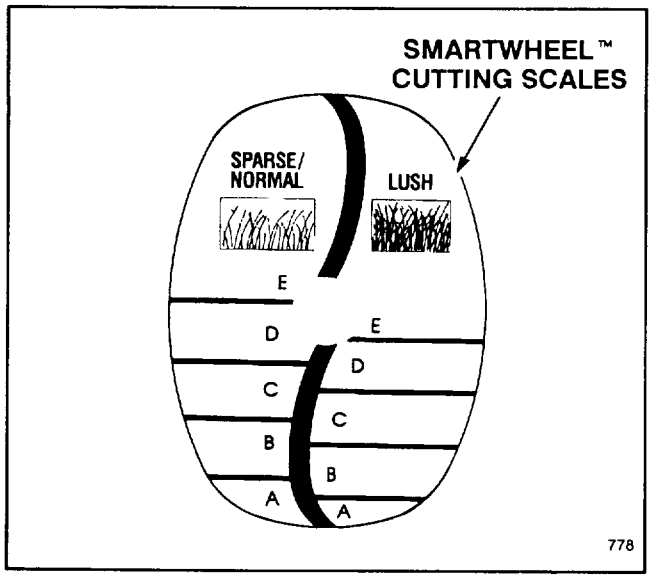


**Figure 9**

**3.** Squeeze the mower's height–of–cut lever toward the wheel and move it to the corresponding color/letter on the mower housing (Fig. 10). For easier adjustment, lift housing up so wheel is off ground. **Do not put fingers under housing when lifting.** Ensure pin on height–of– cut lever engages slot in housing. Adjust all wheels to the same color/letter setting.

**Note:** Front wheels can be adjusted to 1/2 inch. Move adjusting lever past "A" and release pin into slot in housing. It is not recommended that the1/2 inch height–of–cut setting be used on a regular basis.

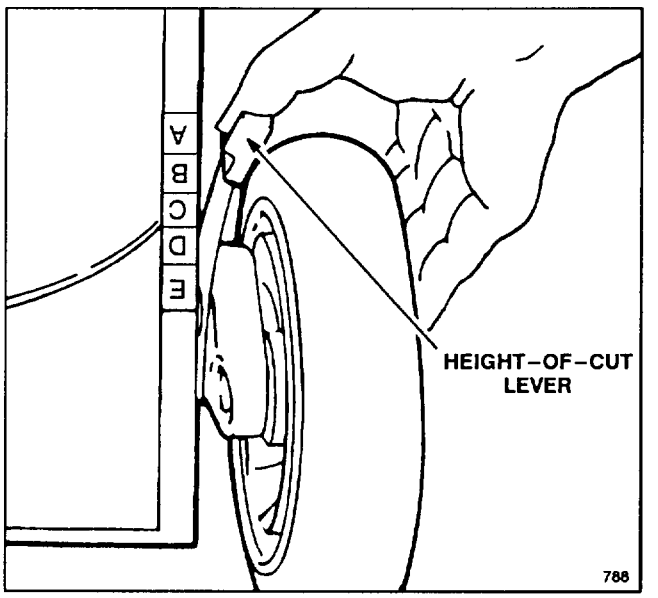


**Figure 10**

# MAINTENANCE

**⚠ CAUTION**

- **Engine could start accidentally.**
- **Accidental starting of engine could cause serious injury to operator or bystanders.**
- **Pull wire off spark plug before performing any maintenance or adjustments.**

## SERVICING AIR CLEANER

Normally, replace air cleaner after every 25 operating hours. More frequent replacement is required when mower is operated in dusty or dirty conditions.

1. Stop engine and pull wire off spark plug (Fig. 13).

2. Remove screw securing air cleaner cover to engine (Fig. 11). Tilt cover down and clean thoroughly.

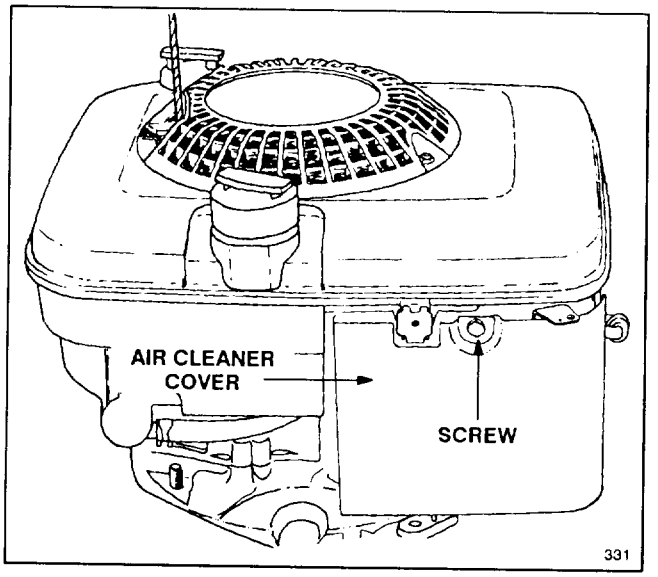


Figure 11

3. Remove paper air cleaner filter (Fig. 12) and discard.

4. Insert new paper air cleaner filter cartridge so lip touches back plate as shown in Figure 12.

**IMPORTANT: Do not try to vacuum or blow dirt out of a dirty paper filter. Always replace a dirty filter with a new one.**

5. Close air cleaner cover and secure with screw.

**IMPORTANT: Do not operate engine without air cleaner element because extreme engine wear and damage will likely result.**

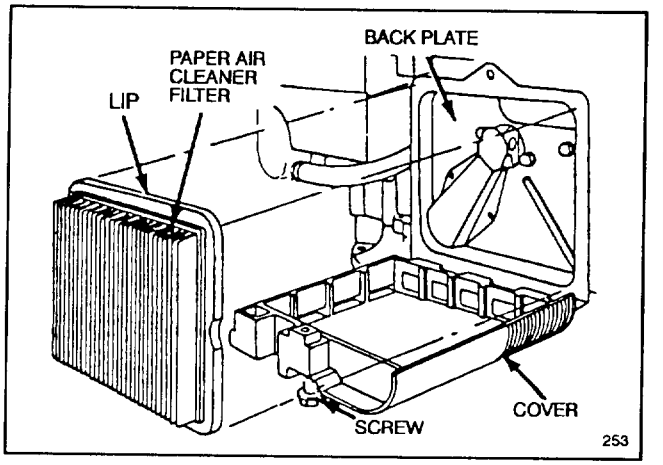


Figure 12

## REPLACING SPARK PLUG

Use a Champion RJ19LM spark plug or equivalent. Correct air gap is 0.030" (0.76 mm). Remove plug after every 25 operating hours and check its condition.

1. Stop engine and pull wire off spark plug (Fig.13).

2. Clean around spark plug and remove plug from cylinder head.

**IMPORTANT: Replace a cracked, fouled, or dirty spark plug. Do not sand blast, scrape, or clean electrodes because engine damage could result from grit entering cylinder.**

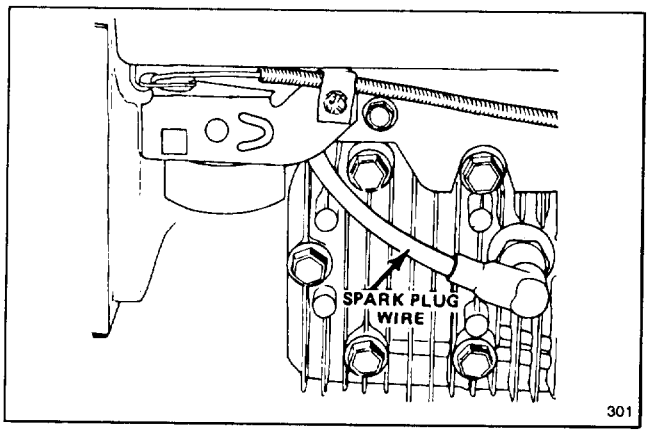


Figure 13

3. Set air gap at 0.030" (0.76 mm) (Fig. 14). Install correctly gapped spark plug and gasket seal. Tighten plug firmly to 15 ft–lb (20 N·m).

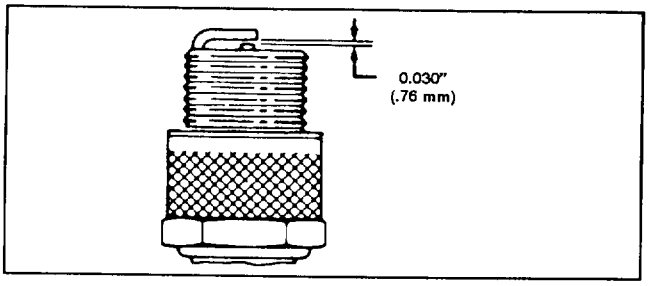


Figure 14

# MAINTENANCE

## DRAINING GASOLINE

1. Stop engine and wait for engine to cool. Pull wire off spark plug (Fig. 13).

**⚠ CAUTION**

- **If gasoline is spilled on a hot engine, it could ignite.**
- **Contact with burning gasoline could cause serious personal injury.**
- **Drain gasoline from a cold engine only.**

2. Remove cap from fuel tank and use pump–type syphon to drain fuel into clean gas can.

**Note:** This is the only procedure recommended for draining fuel.

## ADJUSTING THROTTLE

Throttle control adjustment may be required if engine does not start. Whenever a new throttle control cable is installed, throttle must be adjusted.

1. Stop engine and pull wire off spark plug (Fig.15).

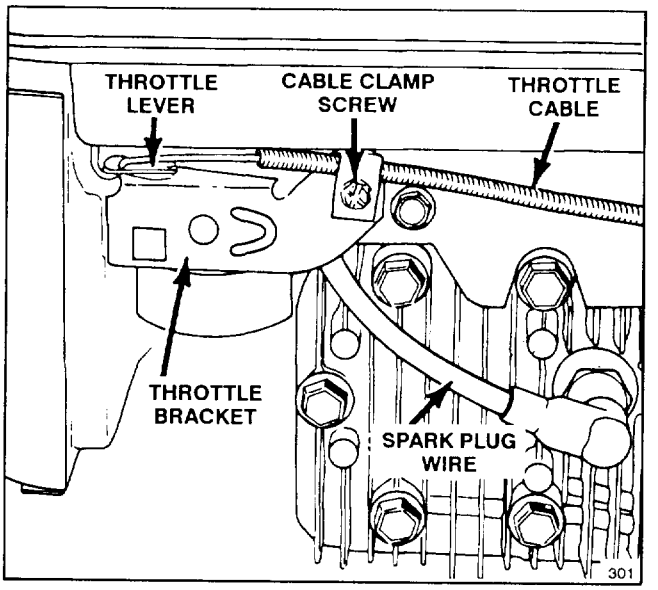


Figure 15

2. Move throttle control to FAST.

3. Loosen cable clamp screw until throttle cable slides (Fig. 15). Align holes in throttle lever and throttle bracket using a 1/8" diameter drill (Fig. 16). Tighten cable clamp screw to lock adjustment in place.

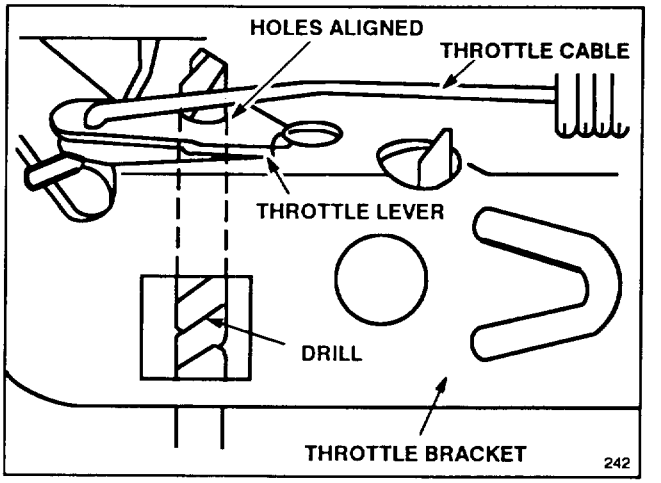


Figure 16

## CHANGING CRANKCASE OIL

Change oil after the first 2 operating hours and after every 25 hours thereafter. Since warm oil drains better and carries more contaminants than cold, run engine for a minute or so before draining oil.

1. Stop engine and pull wire off spark plug (Fig. 15).

2. Drain gasoline from fuel tank: refer to Draining Gasoline, page 9.

3. Tip mower on its right side. Remove drain plug from underside of mower using a 3/8" drive (Fig. 17). Place a drain pan under mower.

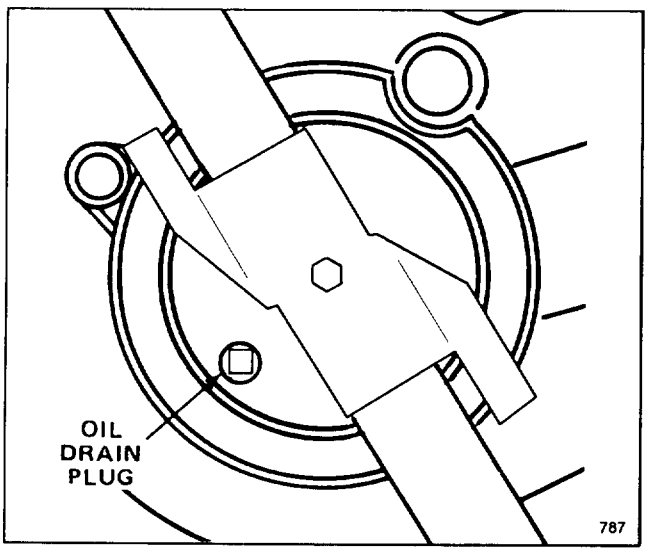


Figure 17

4. Lower mower to allow oil to drain into pan.

5. After draining, clean drain plug and reinstall it. Wipe up any spilled oil. Fill engine with fresh oil: refer to Fill Crankcase With Oil, page 4.

# MAINTENANCE

## ADJUSTING WHEEL DRIVE (self–propelled model only)

If mower does not self–propel or self–propels when control bar is **more** than 1-1/2 inches from the handle, adjust wheel drive control knob on rear of gear box.

**1.** ADJUSTMENT (Fig. 18)—Rotate control knob clockwise 1/2 turn if mower does not self–propel. If mower creeps forward, rotate knob 1/2 turn counterclockwise to loosen belt.

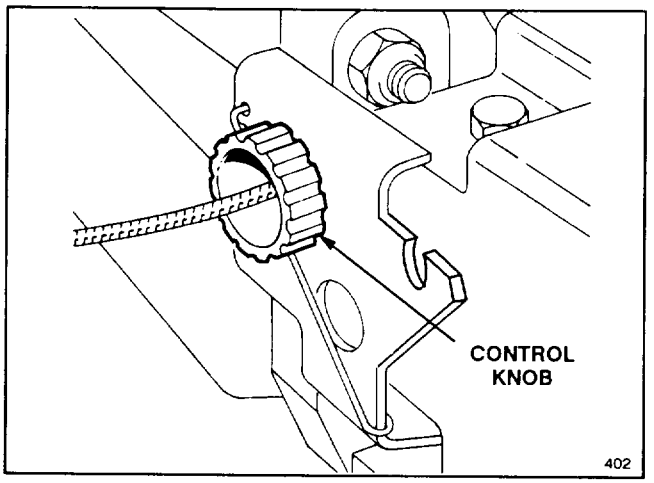


**Figure 18**

**2.** CHECK ADJUSTMENT—Slowly pull mower backward while control bar is gradually moved toward handle. Adjustment is correct when rear wheels stop turning and control bar is about 1–1/2 inches from handle (Fig. 19).

**3.** Repeat steps 1 and 2 until properly adjusted.

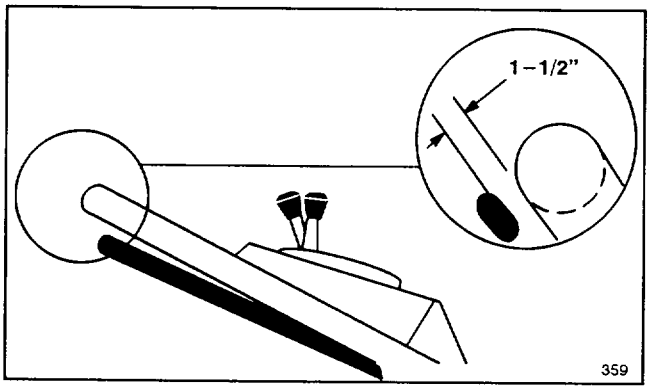


**Figure 19**

## INSPECTING/REMOVING/SHARPENING BLADE

Always mow with a sharp blade. A sharp blade cuts cleanly and without tearing or shredding the grass blades like a dull blade.

**1.** Stop engine and pull wire off spark plug (Fig. 15).

**2.** Drain gasoline from fuel tank; refer to Draining Gasoline, page 9.

**⚠ CAUTION**

- **Engine could start accidentally.**
- **Accidental starting of engine could cause serious injury to operator or bystanders.**
- **Do not attempt to inspect, remove or replace blade without first removing the spark plug wire from spark plug and fastening it away from accidental contact with spark plug.**

**3.** Tip mower on its right side (Fig. 20). Avoid rotating the blade because starting problems may result.

**4.** INSPECTING BLADE—Carefully examine blade for sharpness and wear, especially where flat and curved parts meet (Fig. 21A). Since sand and abrasive material can wear away the metal that connects the flat and curved parts of the blade, check blade before using the mower. If a slot or wear is noticed, (Fig. 21B & C), replace blade. Refer to step 5.

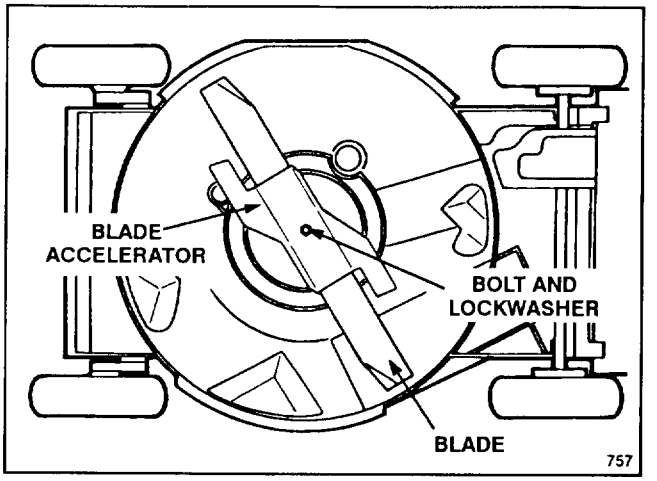


Self–propelled model shown

**Figure 20**

**Note:** For best performance, install new blade before cutting season begins. During the year, file down small nicks to maintain the cutting edge.

**⚠ DANGER**

- **A worn or damaged blade could break and a piece of blade could be thrown into operator's or bystander's area.**
- **A thrown piece of blade could cause serious personal injury or death to operator or bystanders.**
- **Inspect blade periodically for wear or damage.**
- **Replace a worn or damaged blade.**

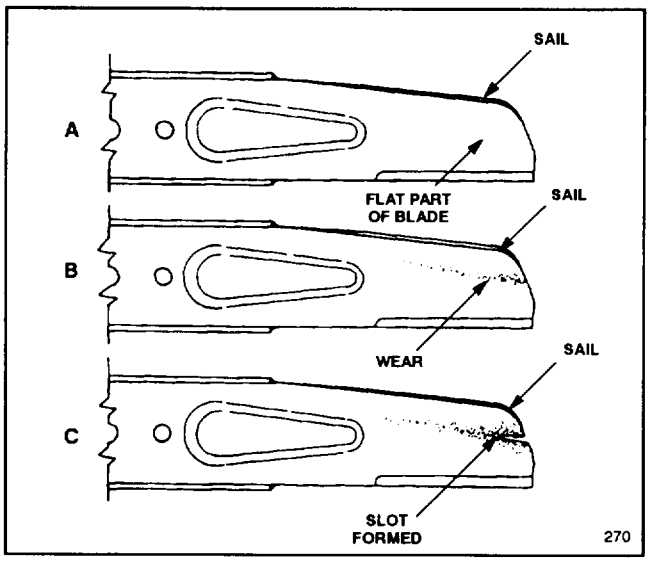


Figure 21

5. REMOVING BLADE—Grasp end of blade using a rag or thickly padded glove. Remove blade bolt, lockwasher, blade accelerator, and blade (Fig. 20).

6. SHARPENING BLADE—Using a file, sharpen top side of blade and maintain original cutting angle (Fig. 22). The blade will remain balanced if same amount of material is removed from both cutting edges.

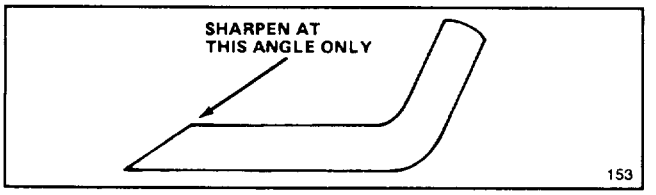


Figure 22

**IMPORTANT: Check balance of blade by putting it on a blade balancer. An inexpensive balancer can be purchased at a hardware store. A balanced blade stays in a horizontal position and an unbalanced blade settles to the heavy side. If blade is not balanced, file more metal off cutting edge on heavy end of blade.**

7. Install sharp, balanced TORO blade, blade accelerator, lockwasher, and blade bolt. Sail part of blade must point toward top of mower housing to ensure correct installation. Tighten the blade bolt to 50 ft–lb (68 N·m).

## LUBRICATION

After every 25 operating hours or when season ends, front and rear wheels must be lubricated.

1. Apply 2 or 3 drops of light oil on inside and outside of all wheel bolts. Spin wheels to distribute oil into bushings. Wipe up excess oil.

2. SELF–PROPELLED MODELS ONLY—Move rear wheel height–of–cut levers to "C" setting. Wipe grease fittings with clean rag (Fig. 23). Install grease gun onto fitting and gently apply 2 or 3 pumps of #2 Multi–Purpose Lithium Base Grease. Excess pressure may damage seals and prevent the free wheel clutch from operating properly.

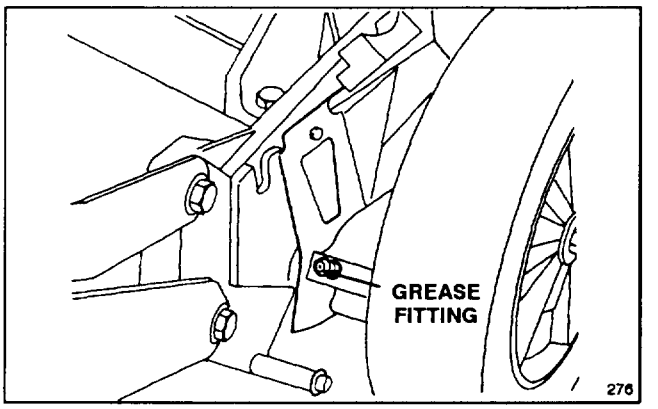


Figure 23

## ADJUSTING BRAKE CABLE

Whenever a new blade brake cable assembly is installed, an adjustment is required.

1. Stop the engine. Pull the wire off the spark plug (Fig. 15).

2. CHECK ADJUSTMENT (Fig. 24 & 25)—Move control bar toward handle until slack in wire is removed. Gap between brake lever and handle must be 1/8"–3/16". See step 3 for adjustment.

3. ADJUST CABLE CONDUIT (Fig. 24 & 25)—Loosen nut on cable bracket. Insert 1/8"–3/16" object between brake lever and handle. Pull down on cable conduit until all slack is removed from wire. Then tighten nut.

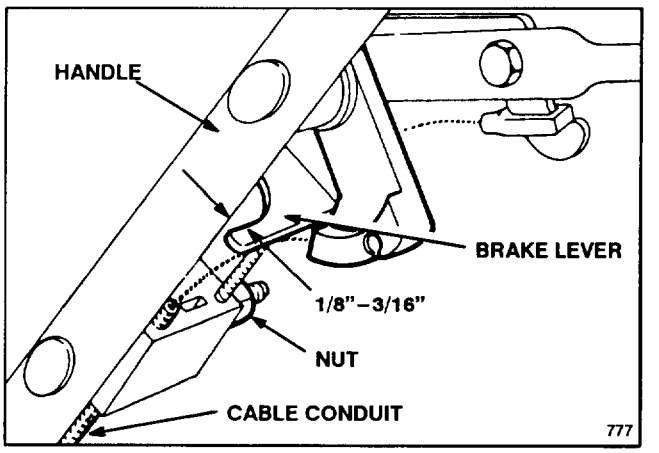


Self–propelled model only

Figure 24

# MAINTENANCE

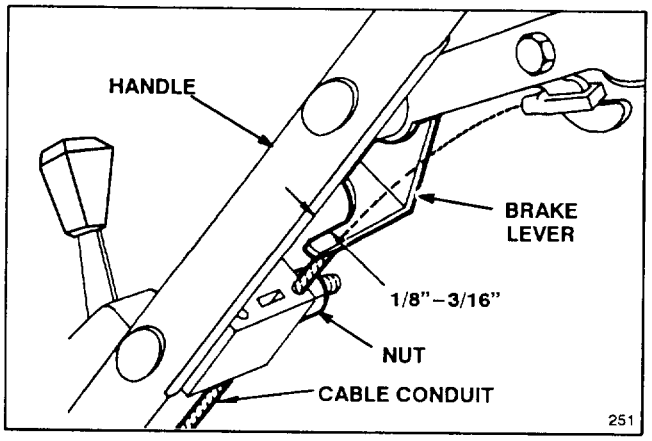


Hand push model only

**Figure 25**

## CLEANING MOWER HOUSING

To ensure best performance, keep underside of mower housing clean. Be especially careful to keep kickers free of debris (Fig. 26).

1. Stop engine and wait for all moving parts to stop. Pull wire off spark plug (Fig. 15).

2. Drain gasoline from fuel tank: refer to Draining Gasoline, page 9.

3. Tip mower on its right side (Fig. 26). Avoid rotating blade because starting problems may result.

4. Remove dirt and grass clippings that stick to housing with a garden hose. Scrape out remaining debris with a hardwood scraper. Avoid burrs and sharp edges.

5. Turn mower upright.

6. If a garden hose was used to clean the housing, start the engine and let it run for a few minutes to dry out any moisture that may have entered it. While the engine is running, engage and disengage the safety system several times to dry it out.

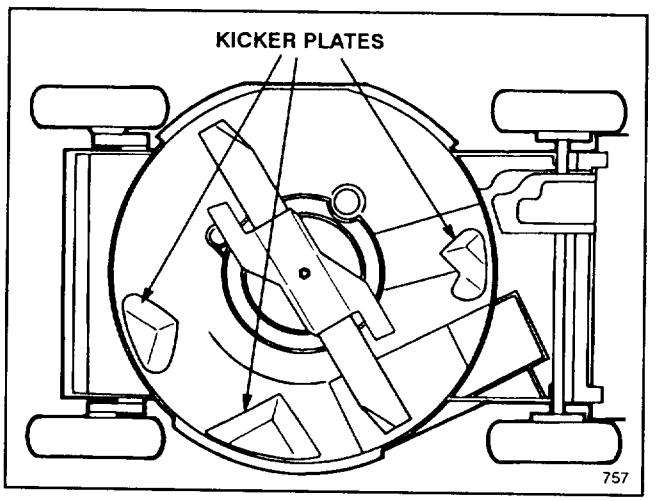


Self–propelled model shown

**Figure 26**

## PREPARING MOWER FOR STORAGE

1. For long term storage, either drain gasoline from fuel tank or use a fuel additive before storing. To drain gasoline, refer to Draining Gasoline, page 9. After fuel is drained, start engine and let it idle until all fuel is consumed and engine stops. Repeat the starting procedure two more times to ensure all gas is removed from the engine. If gasoline is not drained, gum–like varnish deposits will form and cause poor engine operation, even starting problems.

Fuel can be left in gas tank only if a fuel additive, such as Toro's Stabilizer/Conditioner, is added to gasoline before storing. Toro's Stabilizer/Conditioner is a petroleum distillate based conditioner/stabilizer. Toro does not recommend stabilizers with an alcohol base, such as ethanol, methanol or isopropyl. Use fuel additive in recommended quantities as specified on container.

Under normal conditions, fuel additives remain effective in fuel for 6–8 months.

2. Drain oil: refer to Changing Crankcase Oil, page 9. After oil is drained, do not fill crankcase with oil until the following steps (3–10) are completed.

3. Remove spark plug and pour 2 tablespoons of SAE 30 oil into hole in cylinder. Pull starter rope slowly to coat inside of cylinder. Install spark plug and tighten to 15 ft–lb (20 N·m). **DO NOT INSTALL WIRE ON SPARK PLUG.**

4. Clean mower housing: refer to Cleaning Mower Housing, page 12.

5. Check condition of blade: refer to Inspecting/Removing/Sharpening Blade, page 10.

6. Tighten all nuts, bolts, and screws.

7. Clean dirt and chaff from cylinder, cylinder head fins, and blower housing. Also remove grass clippings, dirt, and grime from external parts of the engine, shrouding, and top of mower housing.

8. Clean air cleaner: refer to Servicing Air Cleaner, page 8.

9. Lubricate the wheels: refer to Lubrication, page 11.

10. Touch up all rusted or chipped paint surfaces. Toro Re–Kote paint is available from an Authorized TORO Service Dealer.

11. Fill crankcase with oil; refer to Fill Crankcase With Oil, page 4.

12. Store mower in a clean, dry place. Cover mower to keep it clean and protected.

# PRODUCT IDENTIFICATION

A model and a serial number decal is located at rear of mower housing on the hand push model and on the underside of the control panel on the self–propelled model. Always refer to specific numbers on this decal in correspondence or when replacement parts are needed.

# TORO SERVICE SUPPORT

If help - concerning safety, set–up, operation, maintenance, or troubleshooting - is ever needed, contact the local Authorized TORO Service Dealer or Distributor. Refer to the "Yellow Pages" for assistance. In addition to skilled service technicians, the dealer and distributor have factory approved accessories and replacement parts. Keep your Toro all TORO. Buy genuine TORO replacement parts and accessories.

# OPTIONAL EQUIPMENT

For special conditions, the following accessories may be purchased at your local Authorized Toro Service Dealer.

**1. Rear Bagging Kit (Model 59174 for self–propelled models, Model 59179 for hand push models)**—Install discharge tunnel and rear mounting grass bag to convert Recycler® II Super Pro® mower to a rear bagging mower (Fig. 27). Includes discharge tunnel plug.

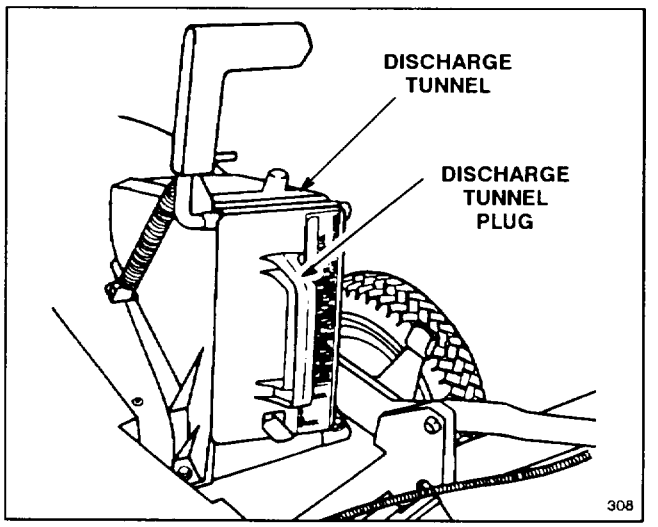


**Figure 27**

**2. Side Discharge Kit, Model 59189**—Install discharge tunnel and rear mounting side discharge chute to convert Recycler® II Super Pro® mower to a side discharge mower (Fig. 28). Includes discharge tunnel plug.

**3. Dethatcher Kit, Model 59131 (self–propelled model only)**—Installs in minutes. Front mounted for easy maneuverability. Spring tines loosen thatch for easy cutting (Fig. 29).

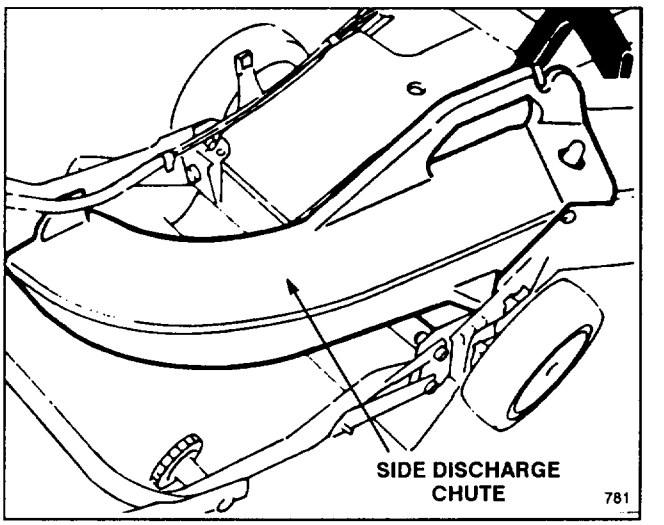


**Figure 28**

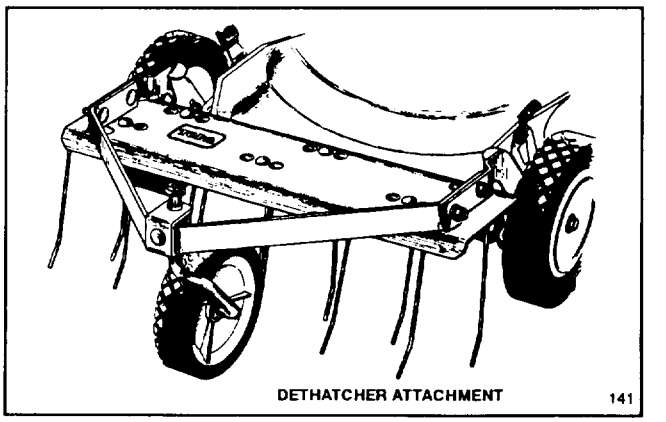


**Figure 29**

**4. Spark Arrestor, Part No. 398067**—If a spark arrestor is required because of local, state, or federal regulations, it may be purchased at your local Authorized Toro Service Dealer. If mower is operated on any California forest, brush, or grass covered land without a properly operating spark arrestor, the operator is violating state law, Section 4442 Public Resources Code.

It is Toro's policy to design and produce high quality products. To ensure customer satisfaction, Toro has extensive warranty coverage on its products. Your TORO GTS Engine powered product has two warranty statements covering it. The Toro Total Coverage Guarantee is our standard warranty statement and is printed on the last page of this manual.

In addition to The Toro Total Coverage Guarantee, we are so confident that the TORO GTS Engine will provide a high level of performance and durability that we are providing a *Starting Guarantee!* Please read the details of this additional warranty coverage printed below.

# THE TORO STARTING GUARANTEE

*A Two Year Limited Warranty*
*On All GTS–2 Engines*

## What Is Covered?

The Toro Company guarantees that your GTS–2 Engine will start on the first or second pull for two years from the date of purchase—if you provide the routine maintenance it requires—or we will fix it. The cost of parts and labor are included, but you must pay transportation costs. This covers GTS–2 engines on Toro rotary mowers.

## What Must You Do To Keep The Warranty In Effect?

You must maintain your GTS–2 Engine by following the maintenance schedule detailed in the operator's manual, at your expense. You must record this work in the maintenance chart provided in your owner's manual and keep your proof of purchase.

## How Do You Get Service?

If the starting performance of your GTS–2 Engine should diminish to the point where it will not start in one or two pulls by a normal, able–bodied adult, you should follow the procedures below:

1. Contact any Authorized TORO Service Dealer, TORO Master Service Dealer, or TORO Distributor (the Yellow Pages of your telephone directory is a good reference source).

2. He will either instruct you to return the product to him or recommend another Authorized TORO Service outlet which might be more convenient.

3. Bring the product, your maintenance records, and proof of purchase to the Service Dealer.

If, for any reason, you are dissatisfied with the Dealer's analysis of your engine's starting condition, or the assistance provided, please feel free to contact us:

TORO Customer Service Department
8111 Lyndale Avenue South
Minneapolis, Minnesota 55420

## What Does This Warranty Not Cover?

This Warranty does not cover:

1. Any repairs on products used commercially.

2. Normal maintenance including replacement of spark plugs, air filter, fuel filter, and carburetor adjustments.

3. Oil change and lubrication.

4. Repairs or adjustments due to:

   a. Failure to follow proper maintenance procedures;

   b. Rotary mower blade striking an object;

   c. Contaminants in the fuel system;

   d. Improper fuel or fuel mixture (consult your owner's manual if in doubt);

   e. Failure to drain the fuel system prior to any period of non–use over three months;

   f. Operation misuse, neglect or accidents;

   g. Repairs or attempted repairs by anyone other than an Authorized TORO Service Dealer.

5. Special operational conditions where starting may require more than two pulls, including:

   a. First time starts after extended period of non–use or seasonal storage;

   b. Cool temperature starts such as those found in early spring and late fall may require an additional pull or two;

   c. Improper starting procedures. If you are having difficulty starting your unit, please check the operator's manual to ensure you are using the correct starting procedures. This can save an unnecessary visit to a Service Dealer.

All warranty repairs reimbursable under this warranty must be performed by an Authorized TORO Service Dealer using Toro approved replacement parts.
The above remedy through repair by an Authorized TORO Service Dealer is the purchaser's sole remedy.

## How Does State Law Relate To This Warranty?

There is no other express warranty except for The Toro Total Coverage Guarantee. All implied warranties of merchantability (that the product is fit for ordinary use) and fitness for use (that the product is fit for a particular purpose) are limited to the duration of the express warranty.

Some states do not allow limitation on how long implied warranties last, so the above exclusion may not apply to you.

The Toro Company is not liable for indirect, incidental or consequential damages in connection with the use of the product, including any cost or expense of providing substitute equipment or service during periods of malfunction or non–use.

Some states do not allow exclusions of incidental or consequential damages, so the above exclusion may not apply to you.

This warranty gives you specific legal rights, and you may also have other rights which vary from state to state.

# GUARANTEED TO START MAINTENANCE RECORD

To keep the starting guarantee in effect, you must perform the following maintenance after every 25 operating hours, more often in dusty and dirty conditions. Follow the procedures in this Operator's Manual and record information on this chart.

| Date | Hours Used | Air Cleaner Service | Change Oil Doesn't Apply to 2-Cycle | Lubricate Wheels | Check Spark Plug | Mower Storage |
|---|---|---|---|---|---|---|
| | | | | | | |
| | | | | | | |
| | | | | | | |

TORO Consumer Products

# THE TORO TOTAL COVERAGE GUARANTEE

A Full Two–Year Warranty
(Limited Warranty for Commercial Use)

## What Is Covered By This Express Warranty?

The Toro Company promises to repair any TORO Product used for residential purposes if defective in materials or workmanship for a period of two years from the date of purchase. The cost of parts and labor are included, but the customer pays the transportation costs.

Transportation within a 15 mile radius of the servicing dealer is covered under this warranty for two–stage snowthrowers, walk behind debris equipment and all TORO Wheel Horse riding products. Walk power mowers, single stage snowthrowers, and other products not specifically covered, are excluded from the transportation coverage provided by this warranty.

## What Products Are Covered By This Warranty?

This warranty applies to all gasoline powered Consumer Products (including TORO Wheel Horse riding products). ProLine riding products, wide area walk behind mowers and 21" Commercial mowers without blade stop controls are covered by separate warranty statements.

## How About Commercial Use?

TORO Consumer Products used for commercial, institutional or rental use are covered by a limited warranty for the following time periods from the date of purchase:

| Products | Warranty Period |
|---|---|
| • Garden Tractors | |
| Chassis | 1 year limited warranty |
| Engine | 2 year limited warranty |
| • 21" Commercial Duty Walk Mower with blade stop controls | 1 year limited warranty |
| • Lawn Tractors, Yard Tractors, Rear Engine Riders, 3.0 and 3.5 HP Edgers, Straight Shaft Trimmers, and Backpack Blowers | 90 day limited warranty |
| • All Others | 45 day limited warranty |

## How Do You Get Warranty Service?

Should you feel your TORO product contains a defect in material or workmanship, contact the dealer who sold you the product or any Authorized TORO Service Dealer or TORO Master Service Dealer. The Yellow Pages of your telephone directory is a good reference source. The dealer will either arrange service at his/her dealership or recommend another Authorized Service Dealer who may be more convenient. You may need proof of purchase (copy of registration card, sales receipt, etc.) for warranty validation.

If for any reason you are dissatisfied with the Service Dealer's analysis of the defect in materials or workmanship or if you need a referral to a TORO Service Dealer, please feel free to contact us at the following address:

Toro Customer Service Department
8111 Lyndale Avenue South
Bloomington, MN 55420–1196
612–888–8801

## What Must You Do To Keep The Warranty In Effect?

You must maintain your TORO Product by following the maintenance procedures described in the operator's manual. Such routine maintenance, whether performed by a dealer or by you, is at your expense.

## What Does This Warranty Not Cover? and How Does Your State Law Relate To This Warranty?

There is no other express warranty except the TORO Starting Guarantee on GTS Engines. This express warranty does not cover:

- Cost of regular maintenance service or parts, such as filters, fuel, lubricants, tune–up parts, blade sharpening, brake and clutch adjustments.
- Any product or part which has been altered or misused or required replacement or repair due to normal wear, accidents, or lack of proper maintenance.
- Repairs necessary due to improper fuel, contaminants in the fuel system, or failure to properly prepare the fuel system prior to any period of non–use over three months.
- Pickup and delivery charges for distances beyond a 15 mile radius from an Authorized TORO Service Dealer (covered products only).

All repairs covered by this warranty must be performed by an Authorized TORO Service Dealer using Toro approved replacement parts.

Repair by an Authorized TORO Service Dealer is your sole remedy under this warranty.

**The Toro Company is not liable for indirect, incidental or consequential damages in connection with the use of the TORO Products covered by this warranty, including any cost or expense of providing substitute equipment or service during reasonable periods of malfunction or non–use pending completion of repairs under this warranty. Some states do not allow exclusions of incidental or consequential damages, so the above exclusion may not apply to you.**

**This warranty gives you specific legal rights, and you may also have other rights which vary from state to state.**

## COUNTRIES OTHER THAN THE UNITED STATES OR CANADA

Customers who have purchased TORO products exported from the United States or Canada should contact their TORO Distributor (Dealer) to obtain guarantee policies for your country, province, or state. If for any reason you are dissatisfied with your Distributor's service or have difficulty obtaining guarantee information, contact the TORO importer. If all other remedies fail, you may contact us at The Toro Company.

UPL-57329


TORO