FORM NO. 3320–797

TORO®

MODEL NO. 20912B – 3900001 & UP
MODEL NO. 20917B – 3900001 & UP

OPERATOR'S MANUAL

48 CM HP & SP REAR BAGGER MOWER

ENGLISH

⚠ SAFETY INSTRUCTIONS

Improper use or maintenance of this mower by the operator or owner can result in injury. To reduce the potential for injury, comply with these safety instructions and always pay attention to the safety alert symbol ⚠ . Failure to comply with these instructions may result in personal injury.

WARNING: Engine exhaust contains carbon monoxide which is an odorless, deadly poison. Carbon monoxide is also known to the State of California to cause birth defects. Do not run engine indoors or in an enclosed area.

BEFORE OPERATING

1. Read this manual carefully before operating the mower. Become familiar with the controls and proper use of the mower. Never allow children to operate the mower or adults to operate it without proper instructions.

2. Keep everyone, especially children and pets, away from area of operation. Thoroughly inspect area where mower will be used and remove sticks, stones, wire, and debris that could be picked up and thrown by mower.

3. Wear long pants and substantial shoes. Do not operate mower while wearing open sandals, jewelry, loose clothing or when barefoot.

4. Check fuel level before starting engine. Do not fill fuel tank indoors, when the engine is running, or until engine cools for several minutes after running. Wipe up spilled gasoline before starting engine.

5. Keep all guards, shields, and safety devices in place. Repair or replace damaged parts, including decals.

6. Traction drive on self–propelled model is designed to stop when control bar is released. Assure control functions properly before each use of mower.

7. Because fuel is highly flammable, handle it carefully.

- **A.** Use an approved container.
- **B.** Fill fuel tank outdoors, not indoors. **NEVER ADD FUEL TO AN ENGINE THAT IS RUNNING OR HOT.**
- **C.** Install gas cap on fuel container and gas tank, and wipe up any spilled gasoline before starting engine.

WHILE OPERATING

8. Do not run engine indoors.

9. Always maintain secure footing. Keep a firm grip on the handle and walk; never run. Never operate mower in wet grass. Mow only in daylight or in good artificial light.

10. Mow across the face of slopes; never up and down. Use extreme caution when changing direction on slopes. Do not mow excessively steep slopes.

11. Always wear safety glasses or eye shields during operation to protect eyes from foreign objects that may be thrown from the machine.

12. Keep face, hands, and feet away from the mower housing and cutter blade when the engine is running.

13. Stay behind the handle until the engine stops and keep clear of discharge opening at all times.

14. When bagging grass, stop engine before the bag is removed and emptied.

15. Shut engine off and wait for all moving parts to stop before unclogging chute.

16. Since the blade rotates for a few seconds after the engine is shut off, stay behind the handle until all moving parts stop.

17. After striking a foreign object or if mower vibrates abnormally, stop engine and remove wire from spark plug. Check mower for damage and make all repairs before using mower again.

18. Stop the engine before adjusting the height–of–cut.

19. Stop the engine when crossing a gravel driveway, road, or sidewalk.

20. Stop engine before leaving the operator's position—behind the handle. Disconnect wire from spark plug if mower will be unattended.

21. Do not touch engine while it is running or shortly after it is stopped because engine will be hot enough to cause a burn.

MAINTENANCE

22. Perform only those maintenance instructions described in this manual. If major repairs are ever needed or if assistance is desired, contact your local Authorized TORO Service Dealer.

23. Before mower is cleaned, inspected, serviced, or adjusted, stop engine and disconnect wire from spark plug. Keep wire away from plug to prevent accidental starting.

24. To assure the mower is in safe operating condition, frequently check and keep all nuts, bolts, and screws tight. Ensure blade nuts are tightened to 20–35 N·m (15–25 ft–lb).

25. To reduce fire hazard, keep engine free of excessive grease, grass, leaves, and accumulations of dirt.

©The Toro Company–1992

SAFETY INSTRUCTIONS

26. Do not overspeed the engine by changing governor settings.

27. Check grass catcher bag frequently for wear or deterioration. Replace with a new bag when worn or damaged for your protection.

28. Allow engine to cool before storing mower in any enclosure. Do not store mower near any open flame or where gasoline fumes may be ignited by a spark.

29. At the time of manufacture, the mower conformed to the safety standards in effect for rotary mowers. To assure optimum performance and continued safety certification of the mower, use genuine TORO replacement parts and accessories. Replacement parts and accessories made by other manufacturers may result in non–conformance with the safety standards, and that could be dangerous.

SAFETY SYMBOL GLOSSARY



Safety alert



Keep hands and feet away from rotating blade



Read and understand operator's manual



Stop engine before leaving operator's position



Choke on



Ignition off



Fast



Slow



Keep all guards in place



Keep bystanders from area being mowed



Place foot here when starting



Never open discharge door on mower when engine is running, unless grass bag is installed



Traction drive – ENGAGED



Traction drive – DISENGAGED

Self–propelled model only

TABLE OF CONTENTS

	Page
Set–Up Instructions	3
Before Operating	4
Operating Instructions	5
Maintenance	7
Servicing Air Cleaner	7
Replacing Spark Plug	8
Draining Gasoline	8
Adjusting Throttle	8
Adjusting Wheel Traction Drive	9
Inspecting/Removing/Sharpening Blade	10
Lubrication	11
Cleaning Mower Housing	11
Preparing Mower For Storage	11
Toro Service Support	12
Product Identification	12

SET–UP INSTRUCTIONS

INSTALL HANDLE

1. INSTALLING HANDLE—Loosen knobs on mounting brackets (Fig. 1).

2. Position brackets in a vertical position so that holes face up.

3. Slide handle ends into holes in mounting brackets until handle ends are completely seated in brackets (Fig.1). Make sure throttle cable and traction cable (self–propelled model) rest on top of left mounting bracket (Fig. 2).

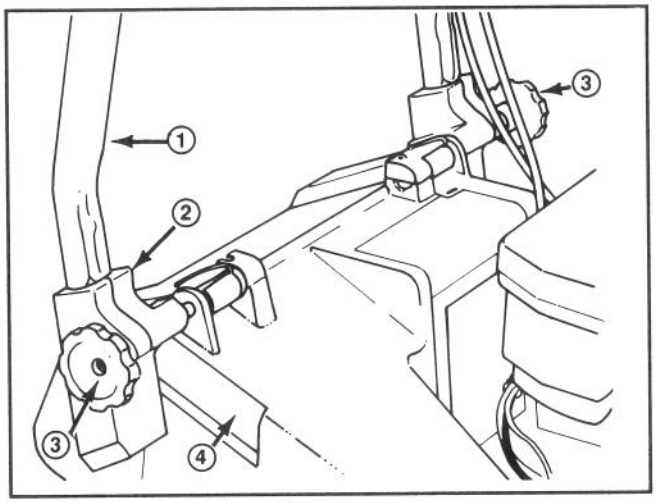

Figure 1

1. **Handle**
2. **Mounting bracket**
3. **Knobs**
4. **Housing pocket**

4. Rotate handle and brackets rearward until brackets fit securely into housing pockets (Fig. 2).

5. Tighten knobs until edges of slots on top of mounting brackets touch.

6. Use cable tie to secure cable(s) to lower side of left hand tube (Fig. 3). Cable tie should be positioned 1" from bend in handle. See Figure 3 for correct cable placement. Cut excess length from end of cable tie on lower left handle.

Note: Make sure cable(s) do not interfere with the raising or lowering of discharge door.

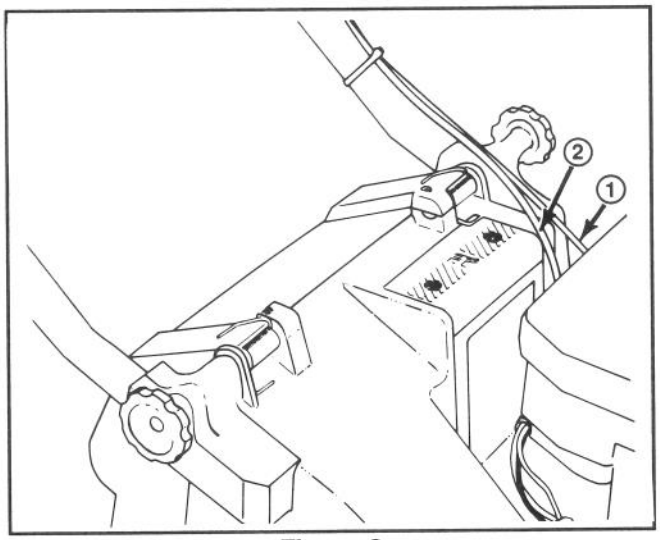

Figure 2

1.Throttle cable * **2.Traction cable**

* **Self–propelled model**

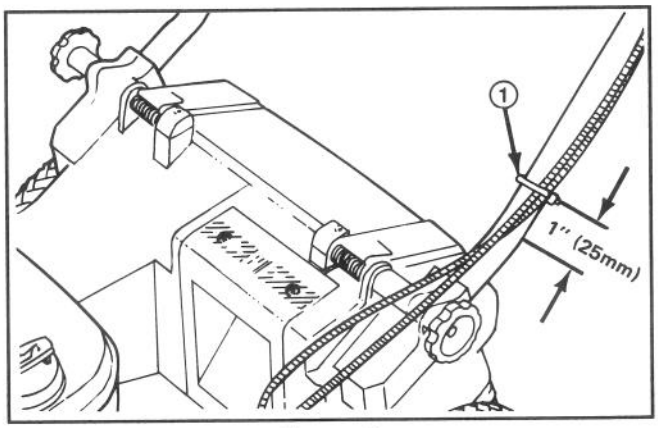

Figure 3

1. Cable tie

INSTALL GRASS BAG

1. Raise discharge door, slide bag ramp attached to bag into discharge opening, and hook bag frame onto rounded portion of mounting brackets (Fig. 4).

Note: Make sure grass bag door is **fully** closed against grass bag before installing bag on mower.

SET–UP INSTRUCTIONS

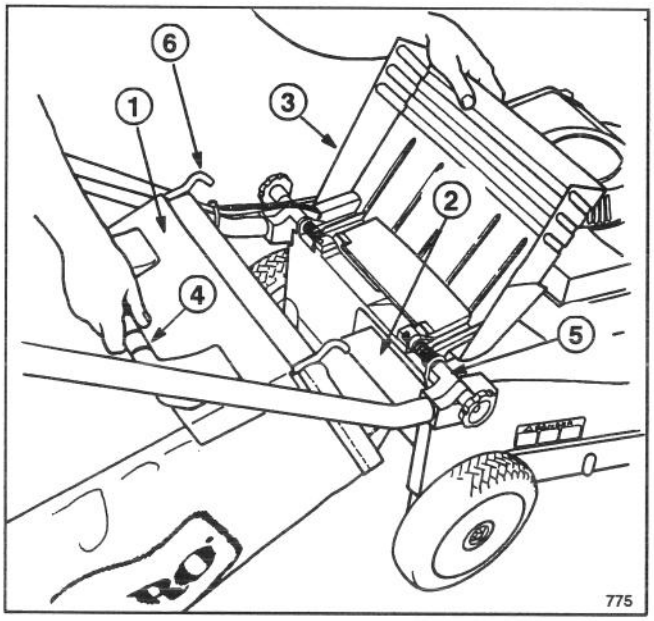

Figure 4

1. Bag door
2. Bag ramp
3. Discharge door
4. Bag handle
5. Mounting bracket
6. Bag frame hook

2. Allow discharge door to rest on top of bag (Fig. 5).

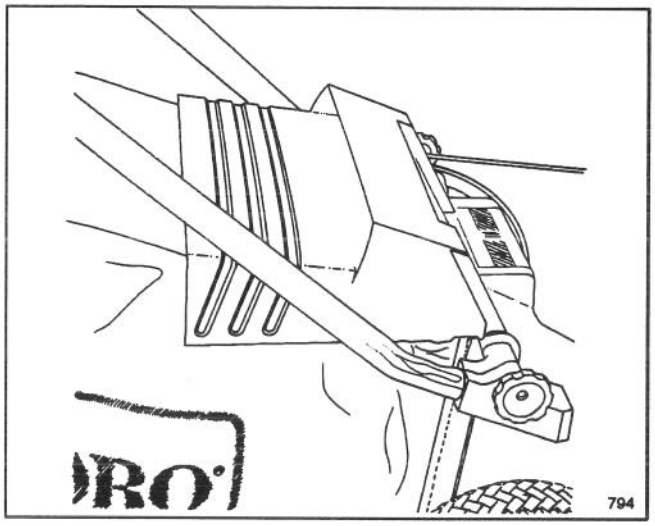

Figure 5

BEFORE OPERATING

WARNING

DANGER: Gasoline is extremely flammable and explosive under certain conditions. DO NOT SMOKE when handling fuel and keep fuel far away from open flames and sparks. Never buy more than a 30 day supply of gasoline. Store it in an approved container. Keep gasoline out of reach of children.

Refuel outdoors and only when engine is cold. Do not fill tank full. Fill tank to within 6 to 13 mm (1/4" to 1/2") from top of tank, not into filler neck. This space is for expansion of fuel. Use funnel or spout to prevent spilling. Wipe up any spilled gas.

MIX GASOLINE AND OIL (Fig. 6)

This product uses a two–cycle engine which requires a mixture of gasoline and two–cycle oil (50:1 gas/oil ratio). Failure to use proper fuel mixture will cause serious engine damage.

1. OIL—For optimum performance, use Toro Two–Cycle Oil. If Toro Two–Cycle Oil is not available, use another high grade two–cycle oil that has the NMMA or BIA–TCW certification printed on the label. Mix fresh, unleaded gasoline and oil as specified in the chart below. Leaded regular gasoline can be used if unleaded is not available.

NEVER USE AUTOMOTIVE OIL (i.e. SAE 30, 10W30 etc.), TWO–CYCLE OIL THAT IS NOT CERTIFIED NMMA/BIA–TCW OR THE WRONG MIX RATIO BECAUSE THE ENGINE CAN BE DAMAGED, AND IT WOULD NOT BE COVERED BY WARRANTY.

2. Mixing Gasoline and Oil—Pour correct amount of two cycle oil into an approved gasoline container and add a small amount of gasoline (see following chart for correct measurements). Install cap on gasoline container and shake the container to mix oil and gas thoroughly. Remove cap and add remaining amount of gasoline.

Toro also recommends that Toro Stabilizer/Conditioner be used regularly in all Toro gasoline powered products during operation and storage seasons. Toro Stabilizer/Conditioner cleans the engine during operation and prevents gum–like varnish deposits from forming in the engine during periods of storage.

IMPORTANT: NEVER USE METHANOL, GASOLINE CONTAINING METHANOL, GASOHOL CONTAINING MORE THAN 10% ETHANOL, PREMIUM GASOLINE, OR WHITE GAS BECAUSE ENGINE FUEL SYSTEM DAMAGE COULD RESULT.

DO NOT USE FUEL ADDITIVES OTHER THAN THOSE MANUFACTURED FOR FUEL STABILIZATION DURING STORAGE SUCH AS TORO'S STABILIZER/CONDITIONER OR A SIMILAR PRODUCT. TORO'S STABILIZER/CONDITIONER IS A PETROLEUM DISTILLATE BASED CONDITIONER/STABILIZER. TORO DOES NOT RECOMMEND STABILIZERS WITH AN ALCOHOL BASE SUCH AS ETHANOL, METHANOL OR ISOPROPYL. ADDITIVES SHOULD NOT BE USED TO TRY TO ENHANCE THE POWER OR PERFORMANCE OF MACHINE.

NOTE: Do not mix gasoline and oil in the product fuel tank. Oil that is at room temperature mixes easier and more thoroughly than cold oil.

BEFORE OPERATING

50:1 GAS/OIL Mixing Chart

Unit of Measure	Gasoline	Oil
U.S. Gallon	1 gallon	2.6 oz.
Imperial Gallon	1 gallon	3 oz.
Liter	1 liter	20 ml

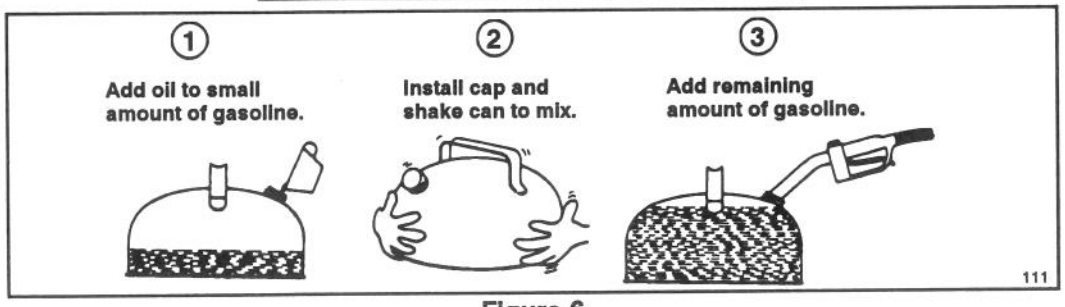

Figure 6

OPERATING INSTRUCTIONS

OPERATING TIPS

1. CUTTING AND BAGGING—Best results are achieved when only about 1/3 of the grass blade is cut. If long grass must be cut, use highest height–of–cut setting (E) for first mowing. Then recut the grass at a more normal setting. If too long of grass is cut, mower may plug and cause engine to stall. When cutting in dry, dusty conditions move the throttle to a slower speed to reduce the amount of dust generated by mower.

2. SHARP BLADE—Begin each cutting season with a sharp blade. Periodically file down nicks.

STARTING, STOPPING, AND SELF–PROPELLING

CONTROLS—Throttle and self–propel control bar (self–propelled model) are on upper handle (Fig. 7). Primer is on front of engine, and recoil starter is on top of engine (Fig. 8).

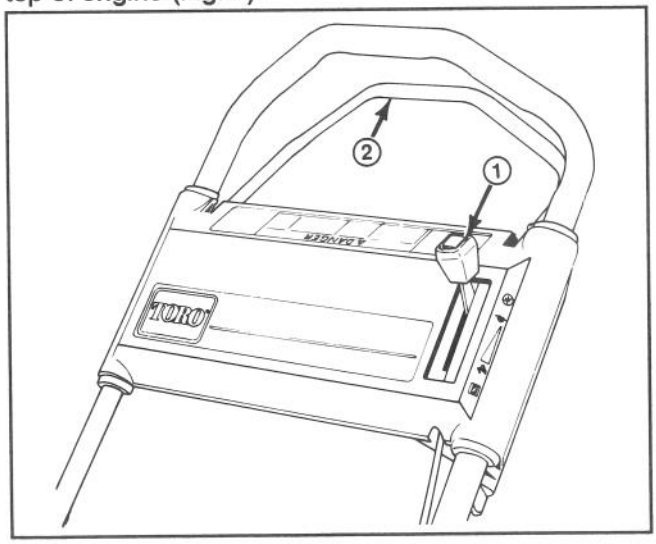

Figure 7

1.Throttle *** 2.Self–propel control bar**

*** Self–propelled model**

1. STARTING—Push spark plug wire onto spark plug (Fig. 8). Move throttle forward to CHOKE position (Fig. 9).

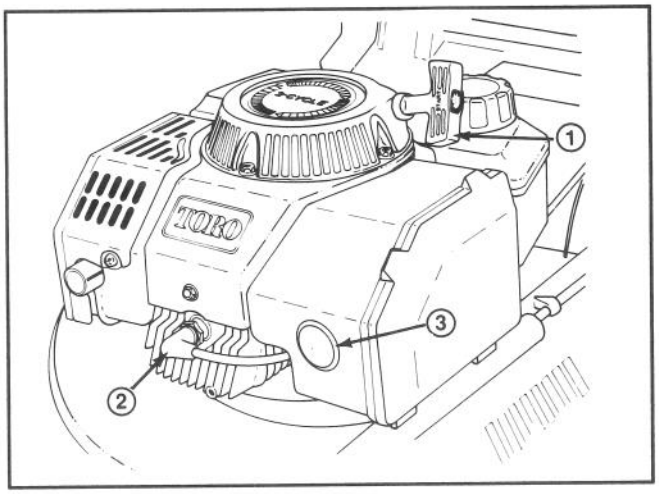

Figure 8

1. Recoil starter **2. Spark plug wire** **3. Primer**

2. Cover hole in center of primer with thumb and push two times.

Choke and primer are usually not necessary when starting a warm engine.

3. Pull engine mounted recoil starter (Fig. 8) out until slack in rope is taken up. Then pull vigorously to start the engine. When engine starts, move throttle rearward to FAST position or regulate engine speed as desired.

NOTE: If engine does not start, move throttle to ENGINE OFF position (Fig. 9) and wait 3 seconds. Then repeat steps 1–3 until engine starts.

OPERATING INSTRUCTIONS

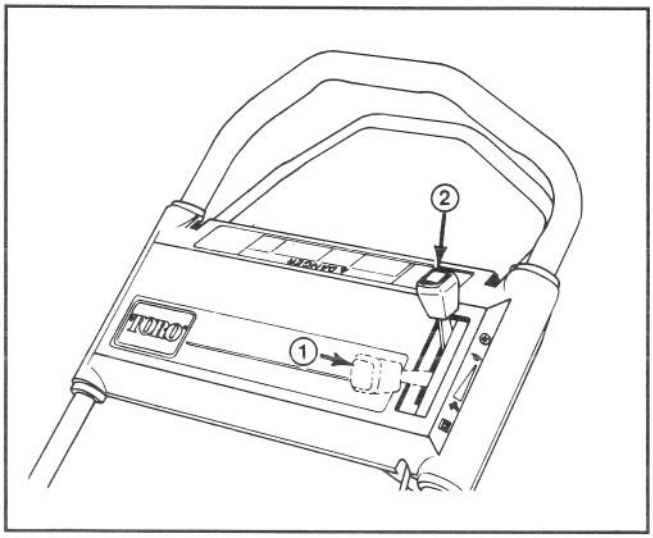

Figure 9

1. Choke on
2. Engine off

4. STOPPING (Fig. 9)—To stop engine, move throttle rearwards to ENGINE OFF position. Pull wire off spark plug if mower will be unattended or not used.

5. WHEEL TRACTION OPERATION (self–propelled model) (Fig. 10)—To self–propel the mower, squeeze the control bar against the handle. To stop the self–propel drive, release the control bar.

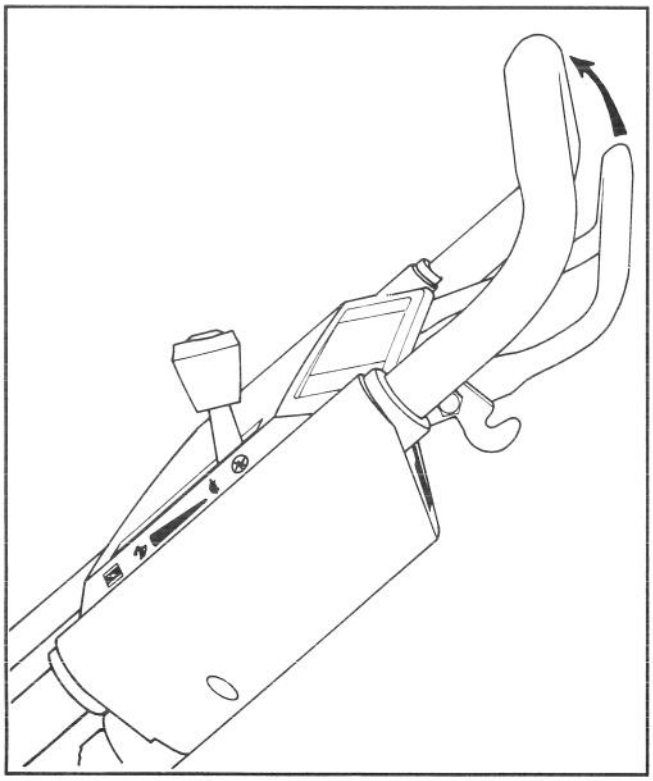

Figure 10

Note: The drive wheels are equipped with freewheeling clutches which enable the mower to be pulled rearward easier when the wheel drive is disengaged. To disengage the clutches, mower must be pushed forward at least 2.5 cm (1") after wheel drive operation has stopped.

USING GRASS BAG

1. Stop engine and wait for all parts to stop.

2. INSTALLING BAG—Raise discharge door, slide bag ramp attached to bag into discharge opening, and hook bag frame onto mounting brackets (Fig. 11). Allow discharge door to rest on top of bag (Fig. 12).

Note: Make sure grass bag door is **fully** closed against grass bag before installing bag on mower.

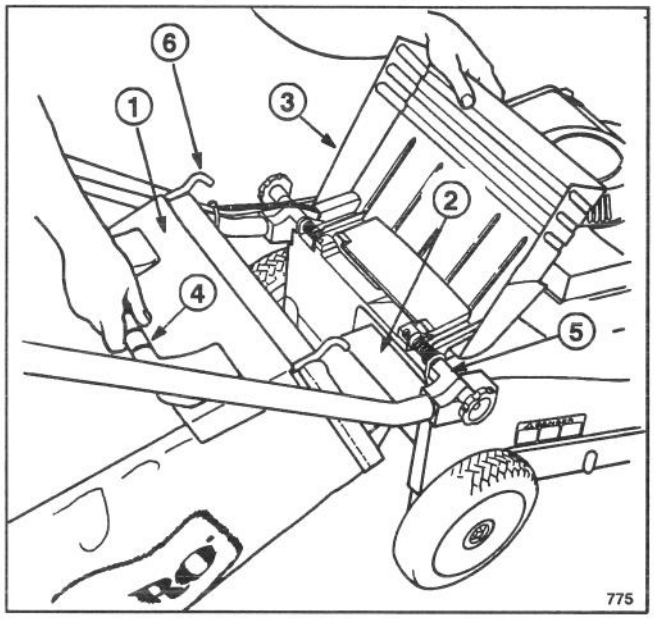

Figure 11

1. Bag door
2. Bag ramp
3. Discharge door
4. Bag handle
5. Mounting bracket
6. Bag frame hook

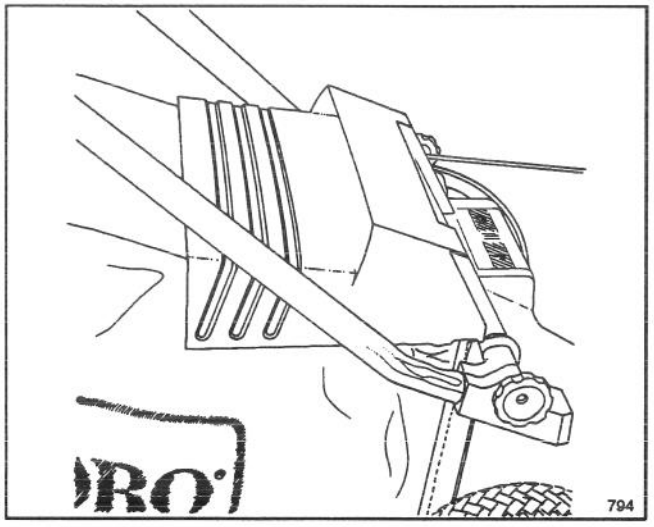

Figure 12

3. REMOVING BAG—**Stop engine and wait for all moving parts to stop.** For protection, always keep hands and feet away from mower housing while engine is running. Raise discharge door. While holding discharge door up, grasp handle on grass bag and lift bag off mower. Allow discharge door to close.

OPERATING INSTRUCTIONS

Note: When removing the grass bag, the bag ramp scoops out any clippings that may be plugging the discharge opening. If the discharge opening remains plugged, clear any clippings from the mower.

⚠ DANGER

- **Grass clippings and other objects can be thrown from an open discharge tunnel.**
- **Objects thrown with enough force could cause serious personal injury or death to operator or bystander.**
- **Never open door on discharge tunnel when engine is running unless the grass bag is securely installed.**

⚠ DANGER

- **A worn grass bag could allow small stones and other similar debris to be thrown in operator's or bystander's direction.**
- **Thrown objects can cause serious personal injury or death to operator or bystanders.**
- **Check the grass bag frequently. If it is damaged, install a new genuine TORO replacement bag.**

4. EMPTYING BAG—Grasp bag frame handle and rear of grass bag. Tip bag door up and gradually tip bag forward to empty clippings.

ADJUSTING HEIGHT–OF–CUT

The five letters on the belt cover represent the height–of–cut settings. All wheels automatically adjust to the same height–of–cut setting.

1. Stop the engine and pull wire off spark plug (Fig. 8).
2. Use one or two fingers to squeeze the height–of–cut adjustment lever (Fig. 13).

To raise the wheel height, squeeze the lever to unlock the height–of–cut adjustment lever and pull up on the mower. Release the lever when the desired height is found. To lower the height, squeeze the height–of–cut adjustment lever to release the lever and push down on the mower **while rolling the mower forwards**. Use the pointer on the link rod to find the correct setting.

3. Make sure the height–of–cut adjustment lever is locked into a height setting before beginning operation. The height should not change when the height–of–cut is locked.

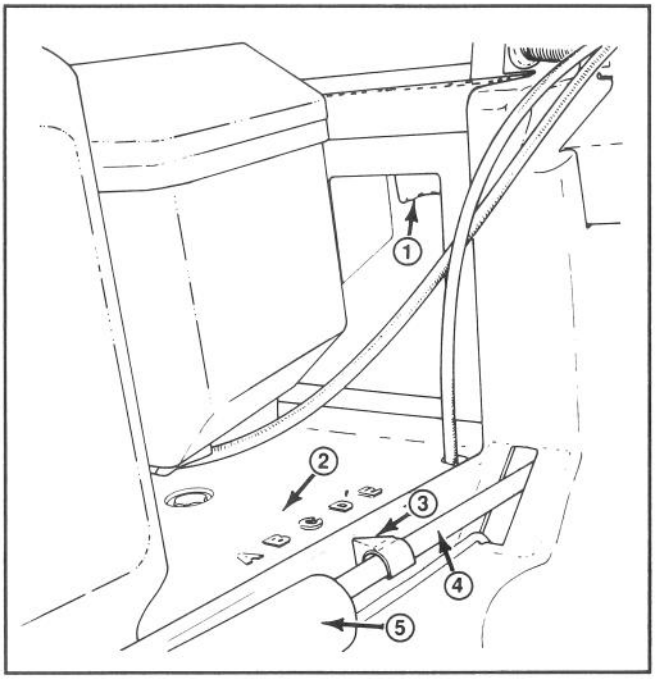

Figure 13

1. **Height–of–cut adjustment lever**
2. **Height settings**
3. **Pointer**
4. **Link rod**
5. **Spring cover**

MAINTENANCE

⚠ CAUTION

- **Engine could start accidentally.**
- **Accidental starting of engine could cause serious injury to operator or bystanders.**
- **Pull wire off spark plug before performing any maintenance or adjustments.**

SERVICING AIR CLEANER

Normally, clean air cleaner after every 25 operating hours. More frequent cleaning is required when mower is operated in dusty or dirty conditions.

1. Stop engine and pull wire off spark plug (Fig. 14).
2. Lift tabs at top of air cleaner cover and pivot cover down (Fig. 14). Clean cover thoroughly.
3. If foam element is dirty, remove it from air cleaner body (Fig. 14). Clean thoroughly.

MAINTENANCE

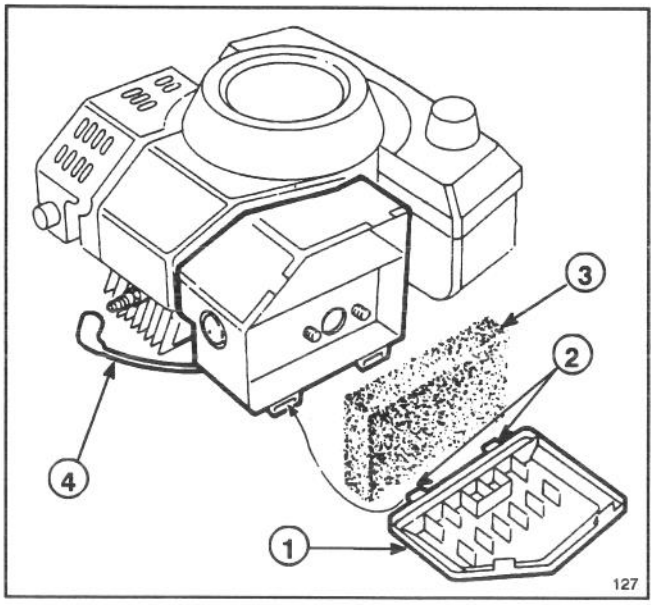

Figure 14

1. Cover
2. Locking tabs
3. Foam element
4. Spark plug wire

A. WASH foam element in a solution of liquid soap and warm water. Squeeze to remove dirt, but do not twist because foam may tear. Rinse thoroughly in clear water.

B. DRY by wrapping in a clean rag. Squeeze rag and foam element to dry.

C. SATURATE element with 25 ml (5 teaspoons) of SAE 30 engine oil. Squeeze element to remove excess oil and to distribute oil thoroughly. A damp element is desirable.

4. Reinstall foam element (flange side facing outward) and air cleaner cover.

IMPORTANT: Do not operate engine without air cleaner element otherwise extreme engine wear and damage will likely result.

REPLACING SPARK PLUG

Use an NGK BPMR4A spark plug or equivalent. Correct air gap is 0.8 mm (0.032"). Remove plug after every 25 operating hours and check its condition.

1. Stop engine and pull wire off spark plug (Fig. 14).

2. Clean around spark plug and remove plug from cylinder head.

IMPORTANT: Replace a cracked, fouled, or dirty spark plug. Do not sand blast, scrape, or clean electrodes because engine damage could result from grit entering cylinder.

3. Set air gap at 0.8 mm (0.032") (Fig. 15). Install correctly gapped spark plug and gasket seal. Tighten plug firmly to 20 N·m (15 ft–lb).

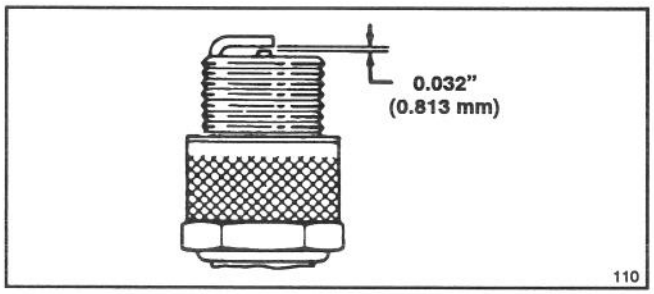

Figure 15

DRAINING GASOLINE

1. Stop engine and wait for it to cool. Pull wire off spark plug (Fig. 14).

Note: Drain gasoline from a cold engine only.

2. Remove cap from fuel tank and use pump–type syphon to drain fuel into clean gas can.

Note: This is the only procedure recommended for draining fuel.

ADJUSTING THROTTLE

Throttle control adjustment may be required if engine does not start or stop. Whenever a new throttle control cable is installed, the throttle must be adjusted.

1. Stop engine and pull wire off spark plug (Fig. 14).

2. Drain gasoline. See Draining Gasoline, page 8.

3. Remove gas tank by removing (4) capscrews securing recoil cover and gas tank in place (Fig. 16). Lift off recoil cover and move gas tank to left side of engine, allowing it to hang on its hose.

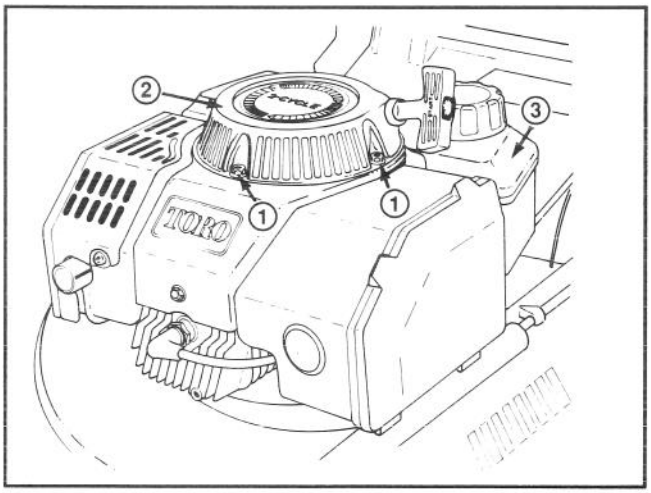

Figure 16

1. Capscrews (4)
2. Recoil cover
3. Gas tank

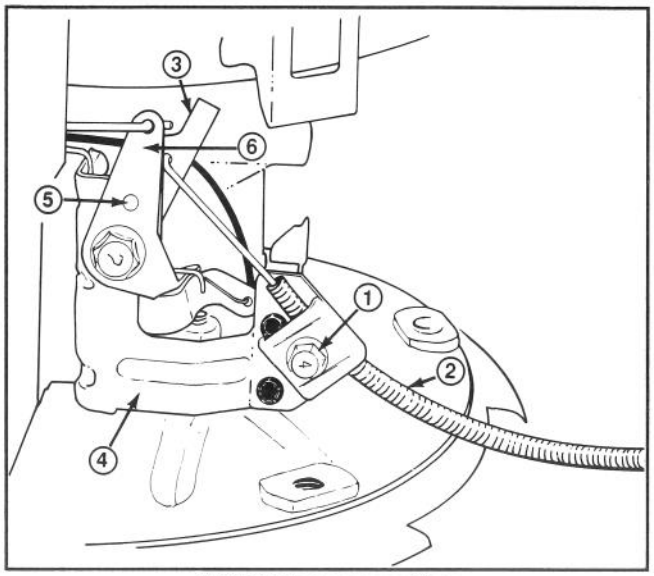

FAST (full speed) position

Figure 17

1. Cable clamp screw
2. Throttle cable
3. Throttle lever
4. Throttle bracket
5. Aligned holes
6. Choke bracket

4. Move throttle control to OFF (engine kill) position (Fig. 9).

5. Loosen cable clamp screw until throttle cable slides (Fig. 18).

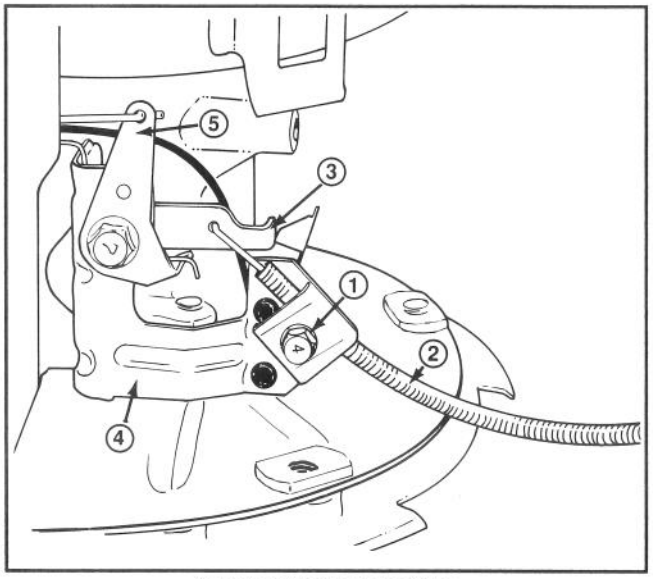

OFF (engine kill) position

Figure 18

1. Cable clamp screw
2. Throttle cable
3. Throttle lever
4. Throttle bracket
5. Choke bracket

6. Align throttle lever so that it touches kill switch and is in alignment with the throttle bracket (Fig. 18).

There should be a distance of 2 mm (.08") between throttle lever and throttle bracket when in alignment.

7. Tighten cable clamp screw to lock adjustment in place.

8. Move throttle to FAST (full speed) position.

9. Check to see if holes in throttle lever and choke bracket are aligned (Fig. 17). If not, repeat steps 4–9 until throttle is properly adjusted.

10. Reinstall gas tank and recoil.

ADJUSTING WHEEL TRACTION DRIVE (self–propelled model only)

If mower does not self–propel or has a tendency to creep forward when drive is not engaged, an adjustment to the wheel traction control cable is necessary.

1. Stop engine.

2. Rotate adjustment knob (Fig. 19) 1/2 turn clockwise to tighten drive belt, or 1/2 turn counterclockwise to loosen belt. Hold control cable while rotating to prevent cable from turning.

3. To check traction adjustment, slowly squeeze the control bar toward the handle. The traction is adjusted correctly when resistance is felt when the control bar is approximately 25 mm (1") from upper handle (Fig. 20).

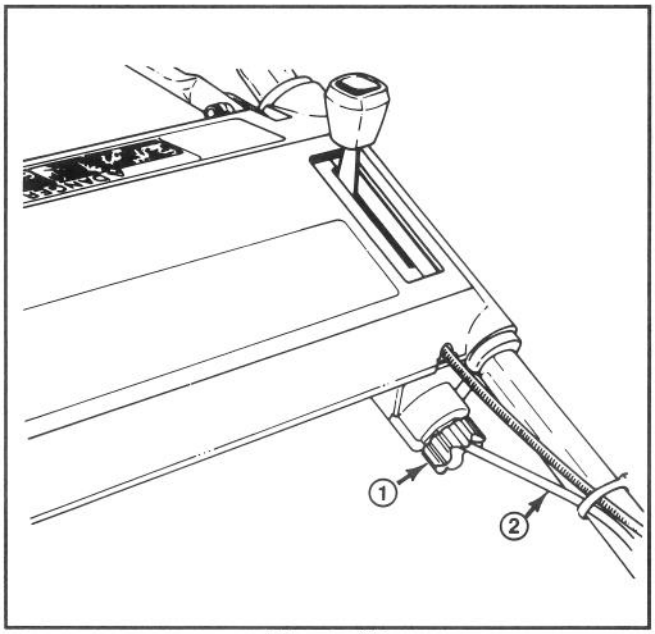

Figure 19

1. Adjustment knob
2. Control cable

4. If loss of traction or improper engagement still occurs after readjustment, repeat steps 2–3 until properly adjusted.

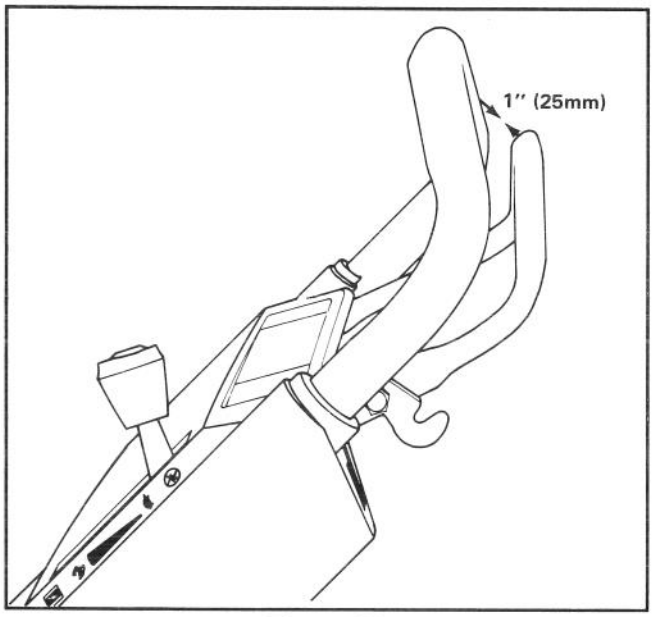

Figure 20

INSPECTING/REMOVING/SHARPENING BLADE

1. Stop engine and pull wire off spark plug (Fig. 14).
2. Drain gasoline from fuel tank; refer to Draining Gasoline, page 8.
3. Tip mower on its right side (Fig. 21). Avoid rotating blade as starting problems may result.

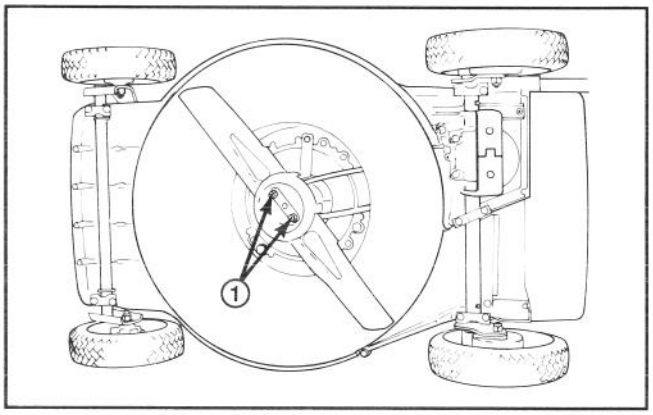

Figure 21

1. Blade nuts

4. INSPECTING BLADE—Carefully examine blade for sharpness and wear, especially where flat and curved parts meet (Fig. 22A). Since sand and abrasive material can wear away the metal that connects the flat and curved parts of the blade, check blade before using the mower. If a slot or wear is noticed, (Fig. 22B & C), replace blade with a new TORO blade. Refer to step 5.

Note: For best performance, install a new TORO blade before cutting season begins. During the year, file down small nicks to maintain the cutting edge.

5. REMOVING BLADE—Grasp end of blade using a rag or thickly padded glove. Remove (2) locknuts, (2) washers, anti–scalp cup, and blade (Fig. 21 & 23).

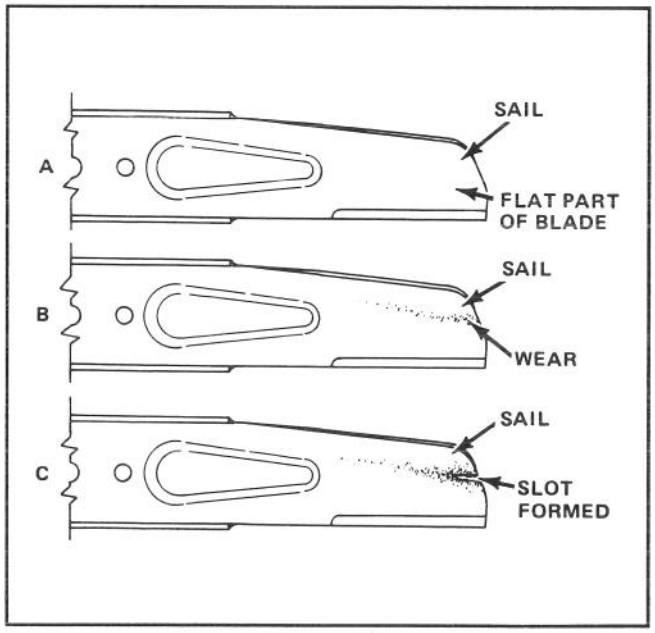

Figure 22

⚠ DANGER

- **A worn or damaged blade could break and a piece of blade could be thrown into operator's or bystander's area.**
- **A thrown piece of blade could cause serious personal injury or death to operator or bystanders.**
- **Inspect blade periodically for wear or damage.**
- **Replace a worn or damaged blade.**

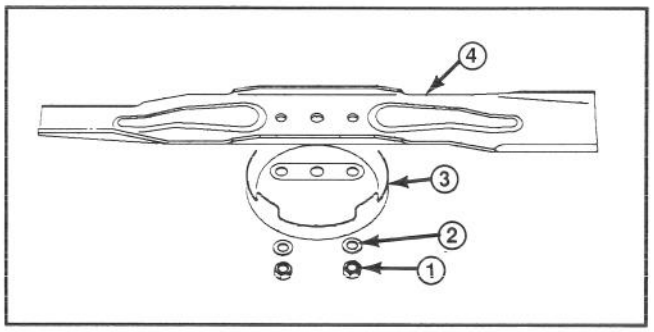

Figure 23

1. Blade nut
2. Washer
3. Anti–scalp cup
4. Blade

6. SHARPENING BLADE—Using a file, sharpen top side of blade (side facing top of mower housing) and maintain original cutting angle (Fig. 24). The blade remains balanced if the same amount of material is removed from both cutting edges.

MAINTENANCE

IMPORTANT: Check balance of blade by putting it on a blade balancer. An inexpensive balancer can be purchased at a hardware store. A balanced blade stays in a horizontal position and an unbalanced blade settles to the heavy side. If blade is not balanced, file more metal off cutting edge on heavy end of blade.

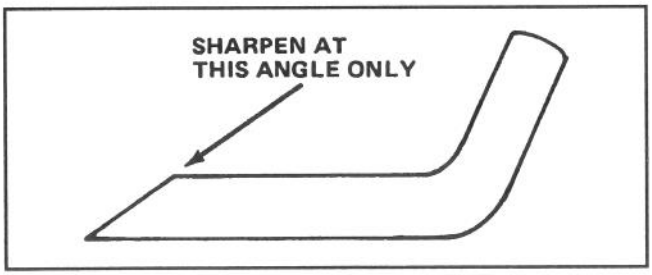

Figure 24

7. Install sharp, balanced TORO blade, anti–scalp cup, (2) washers, and (2) blade nuts. Sail part of blade must point toward top of mower housing to assure correct installation. Tighten blade nuts to 20–35 N·m (15–25 ft–lb).

LUBRICATION

After every 25 operating hours or when season ends, front and rear wheels must be lubricated.

1. Apply 2 or 3 drops of light oil on inside and outside of all wheel bolts. Spin wheels to distribute oil into bushings. Wipe up excess oil.

2. SELF–PROPELLED MODEL only—Drain gasoline; refer to Draining Gasoline, page 8.

3. Set mower to highest height–of–cut setting (E).

4. Tip mower on its right side. Wipe grease fittings with clean rag (Fig. 25). Install grease gun onto fitting and gently apply two or three pumps of #2 Multi–Purpose Lithium Base Grease.

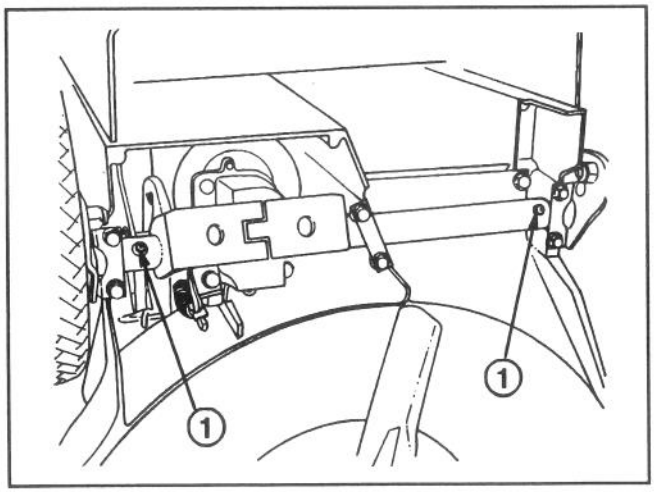

Figure 25

1. **Grease fitting (self–propelled model)**

UPL-57156

CLEANING MOWER HOUSING

To assure optimum performance, keep underside of mower housing and inside of discharge area clean.

1. Drain gasoline from fuel tank: refer to Draining Gasoline, page 8.

2. Tip mower on its right side (Fig. 26). Avoid rotating blade because starting problems may result.

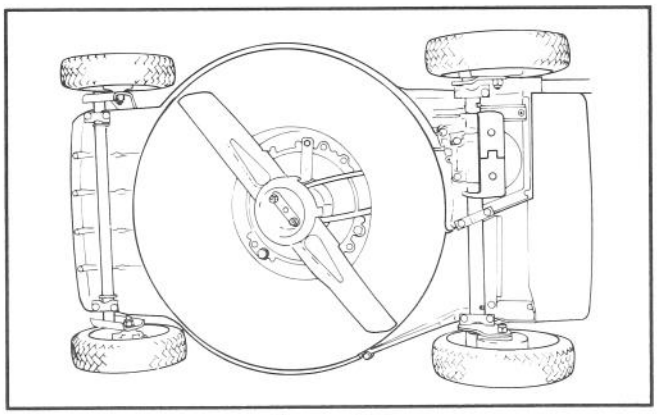

Figure 26

3. Remove dirt and grass clippings that stick to housing by spraying it with a garden hose. Scrape out remaining debris with hardwood scraper. Avoid burrs and sharp edges.

4. Clean discharge door and hinges of grass or debris that may impair operation of door.

PREPARING MOWER FOR STORAGE

1. For long term storage, either drain gasoline from fuel tank or use a fuel additive before storing. To drain gasoline, refer to Draining Gasoline, page 8. After fuel is drained, start engine and let it idle until all fuel is consumed and engine stops. Repeat the starting procedure two more times to assure all gas is removed from the engine. If gasoline is not drained, gum–like varnish deposits will form and cause poor engine operation, even starting problems.

Fuel can be left in gas tank only if a fuel additive, such as Toro's Stabilizer/Conditioner, is added to gasoline and run through engine before storing. Toro's Stabilizer/Conditioner is a petroleum distillate based conditioner/stabilizer. Toro does not recommend stabilizers with an alcohol base, such as ethanol, methanol or isopropyl. Use fuel additive in recommended quantities as specified on container.

Under normal conditions, all fuel additives remain effective in fuel for 6–8 months.

2. Remove spark plug and pour 30 ml (2 tablespoons) of SAE 30 oil into hole in cylinder. Pull starter rope slowly to coat inside of cylinder. Install spark plug and tighten to 20.4 N·m (15 ft–lb). **DO NOT INSTALL WIRE ON SPARK PLUG.**

3. Clean mower housing; refer to Cleaning Mower Housing, page 11.

MAINTENANCE

4. Check condition of blade; refer to Inspecting/Removing/Sharpening Blade, page 10.
5. Tighten all nuts, bolts, and screws.
6. Clean all dirt, chaff, grass clippings, and grime from external parts of the engine, shrouding, and top of mower housing.
7. Clean air cleaner; refer to Servicing Air Cleaner, page 7.
8. Lubricate the wheels; refer to Lubrication, page 11.
9. Touch up all rusted or chipped paint surfaces. Toro Re–Kote paint is available from an Authorized TORO Service Dealer.
10. Store mower in a clean, dry place. Cover mower to keep it clean and protected.

TORO SERVICE SUPPORT

If help – concerning safety, set–up, operation, maintenance, or troubleshooting – is ever needed, contact the local Authorized TORO Service Dealer or Distributor. In addition to skilled service technicians, the dealer and distributor have factory approved accessories and replacement parts. Keep your Toro all TORO. Buy genuine TORO replacement parts and accessories.

PRODUCT IDENTIFICATION

A model and a serial number decal is located at rear of mower housing, near the discharge door. Always refer to specific numbers on this decal in correspondence or when replacement parts are needed.