Form No. 3378-184 Rev A

TORO®

Count on it.

Operator's Manual

Walk-Behind Rotary Broom

Model No. 23740—Serial No. 313000001 and Up
Model No. 38700—Serial No. 313000001 and Up

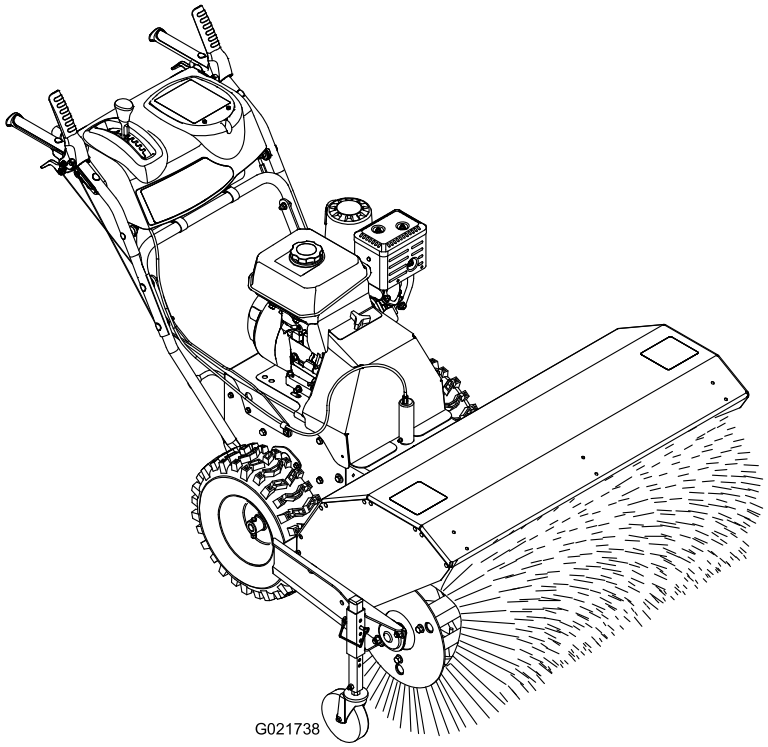

Register at www.Toro.com.
Original Instructions (EN)

3378-184 A

Replacement Engine Owner's Manuals may be ordered through the engine manufacturer.

Introduction

⚠ WARNING

CALIFORNIA
Proposition 65 Warning

This product contains a chemical or chemicals known to the State of California to cause cancer, birth defects, or reproductive harm.

The engine exhaust from this product contains chemicals known to the State of California to cause cancer, birth defects, or other reproductive harm.

Important: The engine in this product is not equipped with a spark arrester muffler. It is a violation of California Public Resource Code (CPRC) Section 4442 to use or operate this engine on any forest-covered, brush-covered, or grass-covered land as defined in CPRC 4126. Other states or federal areas may have similar laws.

To acquire a spark arrester for your unit, see your Engine Service Dealer.

This machine is intended to be used by residential homeowners or professional, hired operators. It is designed for removing snow, dust, and dirt from paved surfaces, such as driveways and sidewalks, and other surfaces for traffic on residential or commercial properties, as well as thatch from grass.

Read this information carefully to learn how to operate and maintain your machine properly and to avoid injury and machine damage. You are responsible for operating the machine properly and safely.

You may contact Toro directly at www.Toro.com for machine and accessory information, help finding a dealer, or to register your machine.

Whenever you need service, genuine Toro parts, or additional information, contact an Authorized Service Dealer or Toro Customer Service and have the model and serial numbers of your machine ready. Figure 1 identifies the location of the model and serial numbers on the machine. Write the numbers in the space provided.

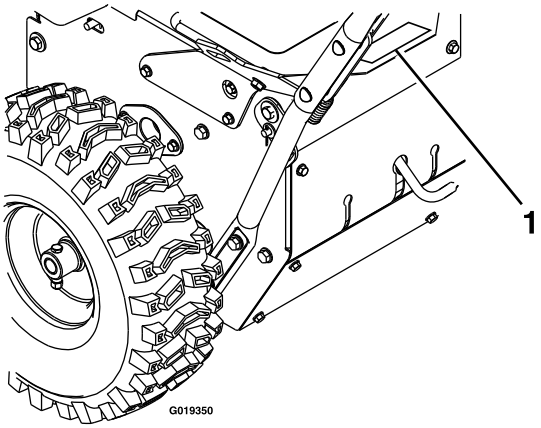

Figure 1

1. Model and serial number location

Model No. _____

Serial No. _____

This manual identifies potential hazards and has safety messages identified by the safety alert symbol (Figure 2), which signals a hazard that may cause serious injury or death if you do not follow the recommended precautions.



Figure 2

1. Safety alert symbol

This manual uses 2 words to highlight information. **Important** calls attention to special mechanical information and **Note** emphasizes general information worthy of special attention.

© 2013—The Toro® Company
8111 Lyndale Avenue South
Bloomington, MN 55420

Contact us at www.Toro.com.
Printed in the USA
All Rights Reserved

Contents

Safety 4
- Training 4
- Preparation 4
- Operation 4
- Clearing a Clogged Broom 5
- Maintenance and Storage 5
- Slope Indicator 6
- Safety and Instructional Decals 7

Product Overview 9
- Controls 9
- Specifications 10
- Attachments/Accessories 10

Operation 10
- Operating Instructions 10
- Transporting the Machine 14

Maintenance 15
- Recommended Maintenance Schedule(s) 15
- Checking the Engine Oil Level 16
- Checking the Traction Cable 16
- Checking for Loose Hardware 16
- Changing the Engine Oil 16
- Checking the Tire Pressure 16
- Checking the Condition of the Belts 16
- Lubricating the Broom Angle Lock Pin and Hex Shaft 16
- Checking the Spark Plug 17
- Checking the Broom Cable 17
- Checking the Broom Shaft Shear Pin 17
- Checking the Broom Segments 18
- Adjusting the Traction Cable 18
- Adjusting the Broom Drive 18
- Adjusting the Wheel Clutch Cable 19

Storage 19
- Preparing the Machine for Storage 19
- Removing the Machine from Storage 20

Troubleshooting 21

Safety

Read and understand the contents of this manual before the engine is ever started.

⚠This is the safety alert symbol. It is used to alert you to potential personal injury hazards. Obey all safety messages that follow this symbol to avoid possible injury or death.

Improperly using or maintaining this machine could result in injury or death. To reduce this potential, comply with the following safety instructions.

Training

- Read the operating and service instruction manual carefully. Be thoroughly familiar with the controls and the proper use of the machine. Know how to stop the machine and disengage the controls quickly.
- Never allow children to operate the machine. Never allow adults to operate the machine without proper instruction.
- Keep the area of operation clear of all persons, particularly small children, and pets.
- Exercise caution to avoid slipping or falling, especially when operating in reverse.

Preparation

- Thoroughly inspect the area where the machine is to be used and remove all doormats, sleds, boards, wires, and other foreign objects.
- Do not operate the machine without wearing appropriate garments. Wear footwear which will improve footing on slippery surfaces.

⚠ CAUTION

This machine produces sound levels in excess of 85 dBA at the operator's ear and can cause hearing loss through extended periods of exposure.

Wear hearing protection when operating this machine.

- Handle fuel with care; it is highly flammable.
  - Use an approved fuel container.
  - Never add fuel to a running or hot engine.
  - Fill fuel tank outdoors with extreme care. Never fill fuel tank indoors.
  - Replace gasoline caps securely and wipe up spilled fuel.
- Never attempt to make any adjustments while the engine is running (except where specifically recommended by manufacturer).
- Let engine and machine adjust to outdoor temperatures before starting to clear snow.
- The operation of any powered machine can result in foreign objects being thrown into the eyes. Always wear safety glasses or eye shields during operation or while performing an adjustment or repair.

Operation

- Do not put hands or feet near or under rotating parts. Keep clear of the discharge opening at all times.
- Exercise extreme caution when operating on or crossing gravel drives, walks, or roads. Stay alert for hidden hazards or traffic.
- After striking a foreign object, stop the engine, remove the wire from the spark-plug, thoroughly inspect the machine for any damage, and repair the damage before restarting and operating the machine.
- If the machine should start to vibrate abnormally, stop the engine and check immediately for the cause. Vibration is generally a warning of trouble.
- Stop the engine whenever you leave the operating position, before unclogging the broom housing, and when making any repairs, adjustments, or inspections.
- When cleaning, repairing, or inspecting, make certain the rotary broom and all moving parts have stopped. Disconnect the spark-plug wire, and keep the wire away from the plug to prevent accidental starting.
- Do not run the engine indoors, except when starting it and for moving the machine in or out of the building. Open the outside doors; exhaust fumes are dangerous.
- Do not clear snow, dirt, or thatch across the face of slopes. Exercise extreme caution when changing direction on slopes. Do not attempt to clear steep slopes.
- Never operate the machine without proper guards, plates, or other safety protective devices in place.
- Never operate the machine near glass enclosures, automobiles, window wells, drop-offs, etc. without proper adjustment of the snow discharge angle. Keep children and pets away.
- Do not overload the machine capacity by attempting to clear snow, dirt, or thatch at too fast a rate.
- Never operate the machine at high transport speeds on slippery surfaces. Use care when reversing.
- Never direct discharge at bystanders or allow anyone in front of the machine.
- Disengage power to the rotary broom when machine is transported or not in use.
- Use only attachments and accessories approved by the manufacturer of machine (such as wheel weights, counterweights, cabs, etc.).
- Never operate the machine without good visibility or light. Always be sure of your footing, and keep a firm hold on the handles. Walk; never run.

- Never operate the machine without good visibility or light.
- Take all possible precautions when leaving the machine unattended. Shift into neutral, set the parking brake, stop the engine and remove the key.

Clearing a Clogged Broom

⚠ WARNING

The rotating broom could cause serious injury.

Always use caution when cleaning the broom.

To clear the broom:

- Park the machine on level ground. Stop engine, wait for all moving parts to stop, and remove the spark plug wire(s).
- Sharp objects can become entangled in bristles. Use gloves and caution when cleaning out the broom of foreign objects; not bare hands.

Maintenance and Storage

- Check all fasteners at frequent intervals for proper tightness to be sure the machine is in safe working condition.
- Never store the machine with fuel in the fuel tank inside a building where ignition sources are present such as hot water and space heaters, clothes dryers, etc. Allow the engine to cool before storing in any enclosure.
- Always refer to owner's guide instructions for important details if the machine is to be stored for an extended period.
- Maintain or replace safety and instructions labels, as necessary.
- When operating in snow conditions, run the machine a few minutes after throwing snow to prevent freeze-up of the collector/impeller.

Slope Indicator

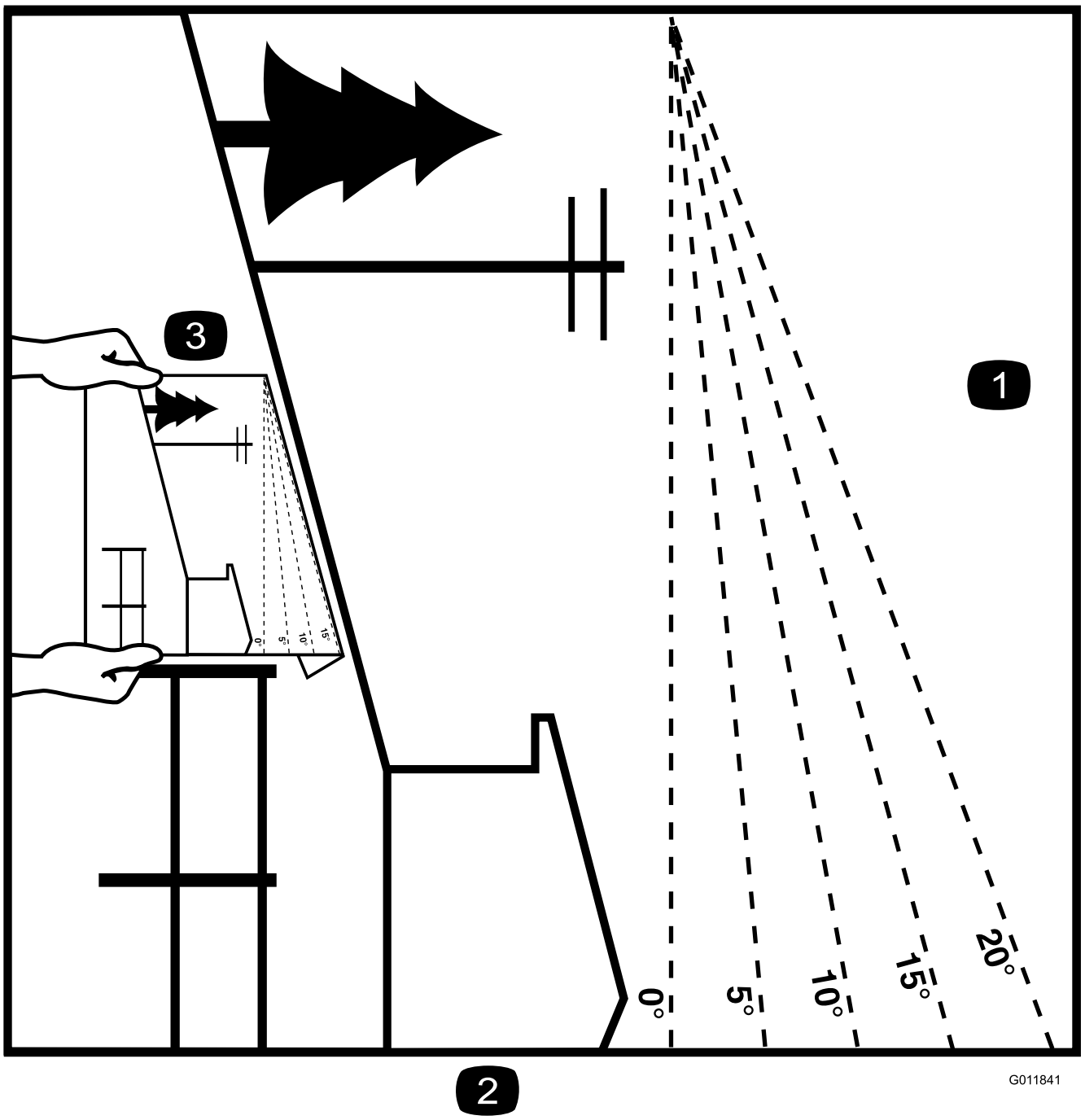

Figure 3

1. The maximum slope you can safely operate the machine on is **10°**. Use the slope indicator to determine the degree of slope of hills before operating. **Do not operate this machine on a slope greater than 10°.** Fold along the appropriate line to match the recommended slope.
2. Align this edge with a vertical surface, a tree, building, fence pole, etc.
3. Example of how to compare slope with folded edge.

Safety and Instructional Decals

Important: **Safety and instruction decals are located near areas of potential danger. Replace damaged decals.**

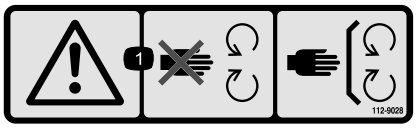

112-9028

1. Warning—stay away from moving parts; keep all guards in place.

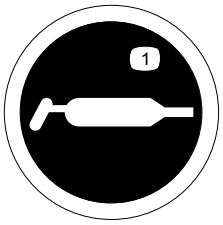

115-2903

1. Grease

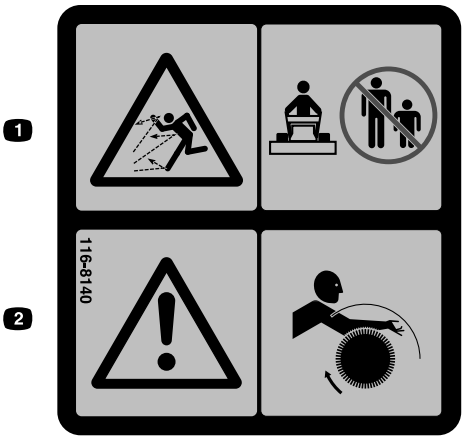

116-8140

1. Thrown object hazard-Do Not operate when people and pets are in the area.
2. Warning-Entanglement hazard-stay clear of rotating broom.

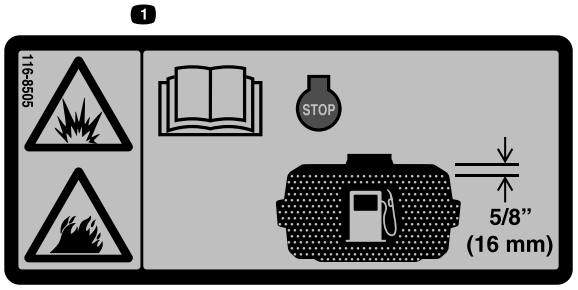

116-8505

1. Explosion/Fire hazard–Read the Operator's Manual. Stop engine before filling fuel tank. Leave 5/8 inch (16mm) at top of tank for fuel expansion-Do Not overfill tank.



117–2718

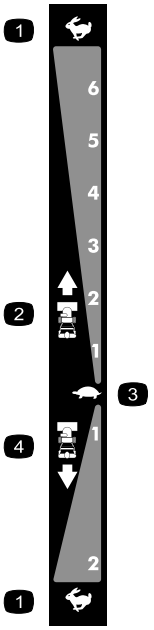

106-4525

Reorder part no. 112-6633

1. Fast
2. Forward speeds
3. Slow
4. Reverse speeds

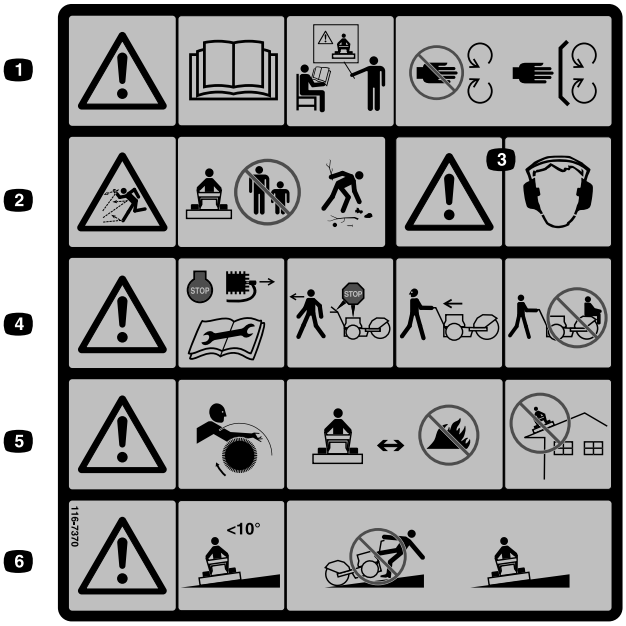

116-7370

1. Warning-Read the Operator's Manual. Do Not operate this machine unless you are trained. Stay away from moving parts; keep all guards in place.
2. Thrown object hazard-Do Not operate when people and pets are in the area; pick up objects that could be thrown by broom.
3. Warning-Wear hearing protection.
4. Warning-Stop engine and remove spark plug before adjusting, servicing, or cleaning machine and attachments. Before leaving the operator's position, disengage broom, traction drive, and stop engine. Look behind and to the side before changing directions. Do Not carry passengers.
5. Warning-Entanglement hazard-stay clear of rotating broom. Broom bristles will melt or burn-keep away from extreme heat or flame. Do Not operate on any roof or other elevated surface.
6. Warning-Do Not operate on slopes greater than 10 degrees. Use extreme caution when operating on slopes; operate across slopes not up and down.



126–0017

1. Engage the left turn lever to turn left.
2. Engage the traction control lever to activate the traction drive.
3. Engage the broom angle lever to adjust the broom.
4. Engage the PTO lever to activate the PTO.
5. Engage the right turn lever to turn right.

Product Overview

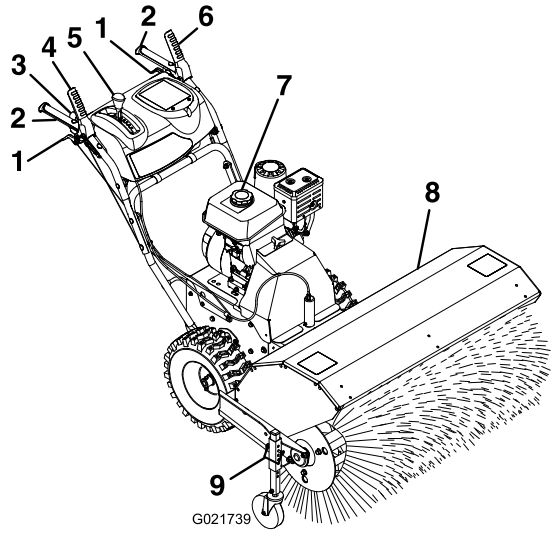

Figure 4

1. Wheel clutch lever
2. Handle
3. Broom angle lever
4. Broom drive lever
5. Speed selector lever
6. Traction drive lever
7. Fuel cap
8. Broom
9. Broom height adjustment pin

Controls

Determine the left and right sides of the machine from the normal operating position.

Choke Control

The choke control is the top lever located on the rear left hand side of the engine above the fuel shut-off valve.

The choke is used to aid in starting a cold engine. Move the lever left to the On position for a cold start. Do not run a warm engine with the choke in the On position.

Throttle Control

The throttle control is located on the rear right hand side of the engine.

The throttle is used to control engine speed. Moving the throttle control to the left will increase engine speed and moving it right will decrease engine speed.

Engine On/Off Switch

Located on the right hand side of the engine.

Rotate the switch clockwise to the On position before starting the engine. Rotate the switch counterclockwise to the Off position to kill the engine.

Fuel Shut-Off Valve

The fuel shut-off valve is the lower lever located on the rear left hand side of the engine below the choke. The fuel shut-off valve shuts off the flow of fuel when the machine will not be used for a few days, when parking inside a building, and during transport to and from the job.

Move the lever to the left to shut off fuel. Move the lever to the right to turn on fuel.

Wheel Clutch Levers

Located below the right hand and left hand handles.

The wheel clutch levers allow the drive to momentarily disengage to one or both wheels with the traction drive lever still engaged. This allows easier turning and maneuvering the machine (Figure 5).

Squeezing both wheel clutch levers simultaneously disengages the drive to both wheels (free-wheeling). This enables you to manually move the machine backward without stopping to shift it into a reverse gear. It also allows you to maneuver and transport the machine more easily when the engine is not running.

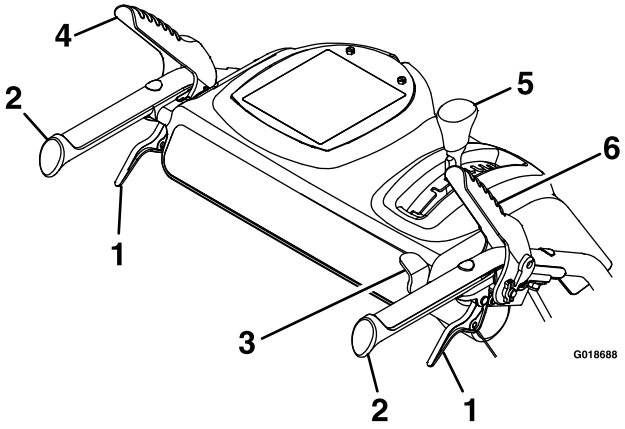

Figure 5

1. Wheel clutch lever
2. Handle
3. Broom angle lever
4. Traction drive lever
5. Speed selector lever
6. Broom drive lever

Broom Drive Lever

Located above the right hand handle (Figure 5).

To engage the broom, squeeze the lever to the handle. To disengage the broom, release the right hand lever.

Traction Drive Lever

Located above the left hand handle (Figure 5).

The traction drive lever controls the forward and reverse motion of the machine. To engage the traction drive, squeeze the lever to the handle.

Note: Holding down the traction drive lever against the handle engages the traction drive to both wheels.

Speed Selector Lever

Located on the main console panel (Figure 5).

The speed selector has 6 forward and 2 reverse settings. To change speeds, release the traction drive lever and shift the speed selector lever to the desired setting. The lever locks in a notch at each speed setting.

Broom Angle Lever

Located on the right hand handle (Figure 5).

The broom can be locked into three positions; straight ahead, or angled to the left or right 19°.

Specifications

Width	118 cm (46.5 inches)
Length	185.5 cm (73 inches)
Height	105.5 cm (41.5 inches)
Weight	146.5 kg (323 lbs)
Engine rpm (no load)	Full speed: 3600 ±100 rpm

Attachments/Accessories

A selection of Toro approved attachments and accessories is available for use with the machine to enhance and expand its capabilities. Contact your Authorized Service Dealer or Distributor or go to www.Toro.com for a list of all approved attachments and accessories.

Operation

Operating Instructions

Open the Fuel Shut-Off Valve

Move the fuel shut-off valve located below the choke, to the right to turn on fuel.

Starting the Engine

1. On the right hand side of the engine, rotate the engine On/Off switch clockwise to the On position.
2. On the rear left hand side of the engine, move the choke lever to the left to the On position. On a warm engine, leave the choke in the Off position.
3. Place the throttle midway between the Slow and Fast positions located on rear right hand side of the engine.
4. Slowly pull the engine recoil handle until you feel resistance and then stop. Allow the recoil handle to return and then sharply pull it straight out. Allow the rope to return slowly.
5. Allow the engine to warm up for several minutes, then move the choke toward the Off position.

Stopping the Engine

1. Bring the unit to a full stop.
2. Place the throttle midway between the Slow and Fast positions.
3. Allow the engine to run for a minimum of 15 seconds, then turn the engine On/Off switch to the Off position to stop the engine.
4. Wait for all moving parts to stop before leaving the operating position.
5. Close the fuel shut-off valve by moving it to the left when the machine will not be in use for a few days, when transporting, or when the unit is parked inside a building.

Driving the Machine

⚠ CAUTION

If the traction drive is not properly adjusted, the machine may move in the direction opposite of what you intended, causing injury and/or property damage.

Carefully check the traction drive and adjust it properly, if necessary.

Important: If the machine moves when the traction lever is in the released position, check the traction cable (refer to Checking the Traction Cable (page 16) and

Adjusting the Traction Cable (page 18)) or contact your authorized Toro dealer.

Driving Forward

1. Place the speed selector lever to the desired forward position, making sure it locks in the notch (Figure 6).

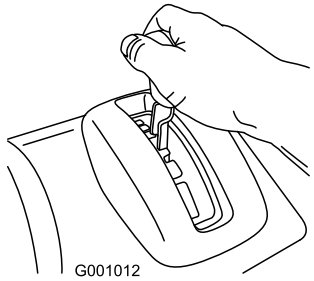

Figure 6

Note: If the ground speed is too fast, debris or snow will pile up in front of the broom causing the broom to bulldoze instead of sweep. This can damage the bristles and the drive line.

2. Slowly squeeze the left hand traction drive lever to the handle (Figure 7).

Note: Holding down the traction drive lever against the handle engages the traction drive to both wheels.

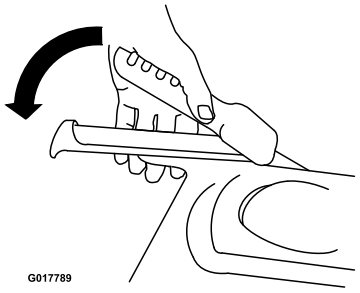

Figure 7

---

3. To stop the traction drive, release the traction drive lever.
4. To move forward, engage the traction drive and slowly squeeze the left hand traction lever to the handle (Figure 8). Momentarily squeezing and releasing the left or right wheel clutch lever allows for steering adjustments to keep the machine going in a straight line, especially in deep snow.

   To turn right, lift up on the right wheel clutch lever and squeeze it toward the handle. This disengages the drive to the right wheel while the left wheel continues driving, and the machine turns to the right.

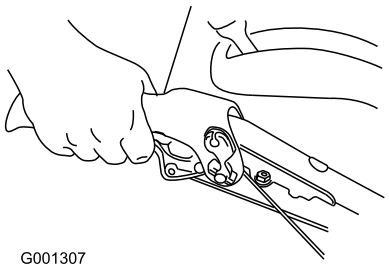

Figure 8

Note: Similarly, squeezing the left wheel clutch lever turns the machine to the left.

When you complete the turn, release the wheel clutch lever. The drive engages both wheels (Figure 9).

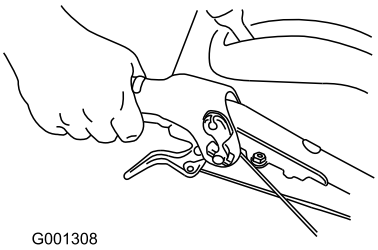

Figure 9

---

5. To stop the traction drive, release the traction drive lever.

Driving Rearward

1. Place the speed selector lever to the desired rearward position, making sure it locks in the notch.
2. To move rearward, engage the traction drive and slowly squeeze the left hand traction lever to the handle. Momentarily squeezing and releasing the left or right wheel clutch lever allows for steering adjustments to keep the machine going in a straight line.

   To turn right, squeeze the right wheel clutch lever toward the handle. This disengages the drive to the right wheel while the left wheel continues driving, and the machine turns to the right.

   Note: Similarly, squeezing the left wheel clutch lever turns the machine to the left.

Squeezing both wheel clutch levers simultaneously disengages the drive to both wheels. This enables machine to be moved rearward without stopping to shift it into a reverse gear. It also allows you to maneuver and transport the machine more easily when the engine is not running.

Operating the Broom

⚠ DANGER

When the machine is in operation, contact with rotating or moving parts will severely injure hands and feet.

- **Before adjusting, cleaning, inspecting, troubleshooting, or repairing the machine, stop the engine and wait for all moving parts to stop. Disconnect the wire from the spark plug and keep it away from the plug to prevent someone from accidentally starting the engine.**
- **Stay behind the handles and away from the broom while operating the machine.**
- **Keep face, hands, feet, and any other part of your body or clothing away from concealed, moving, or rotating parts.**

⚠ WARNING

Contact with a rotating broom can result in serious personal injury or death to the operator or bystanders.

- **To remove an obstruction from the broom; refer to Clearing a Clogged Broom (page 13).**
- **Do not operate the machine if the broom drive lever is not functioning properly. Contact your authorized Toro dealer.**

⚠ WARNING

The rotating broom can throw stones and other foreign objects, causing serious personal injury to the operator or to bystanders.

- **Keep the working area clear and free of all objects that the broom could pick up and throw.**
- **Keep all children and pets away from the area of operation.**

⚠ CAUTION

When the broom is engaged, it may drive the unit in the reverse direction. If the broom height is adjusted too low, the machine may move more forcefully in the reverse direction, causing injury and/or property damage.

Carefully check the broom height and adjust it properly or contact your authorized Toro dealer.

1. Set the engine throttle to the Fast position.
2. Place the speed selector lever into the desired position and slowly squeeze the left hand traction drive lever.

   Important: Make sure the traction drive is engaged before operating the broom; otherwise the broom may drive the unit in the reverse direction.
3. To engage the broom, slowly squeeze the right hand broom lever to the handle (Figure 10).

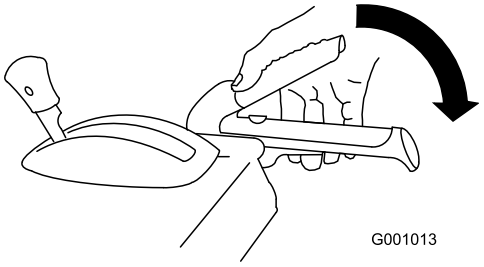

Figure 10

   - If the engine slows down under a load or the wheels slip, shift the machine into a lower gear.
   - If the front of the machine rides up, shift the machine into a lower gear. If the front continues to ride up, lift up on the handles.
4. To stop the broom, release the right hand lever.

Checking the Sweeping Path

A broom sweeps with the tips of its bristles. When too much down pressure is applied, the broom is no longer using its tips; the broom is now working with the sides of the bristles. This limits the flicking action of the bristles, sweeping effectiveness, and can decrease broom life.

1. Drive to a flat dusty area and stop the machine.
2. With the engine running move the throttle midway between Slow and Fast. Engage the broom and allow the broom to sweep for approximately 30 seconds.
3. Disengage the broom and stop the engine.
4. Wait for all moving parts to stop before leaving the operating position.
5. Turn the engine On/Off switch to the Off position.
6. Make sure the area swept equals the length of the broom and a maximum width of 51-102 mm (2-4 inches).

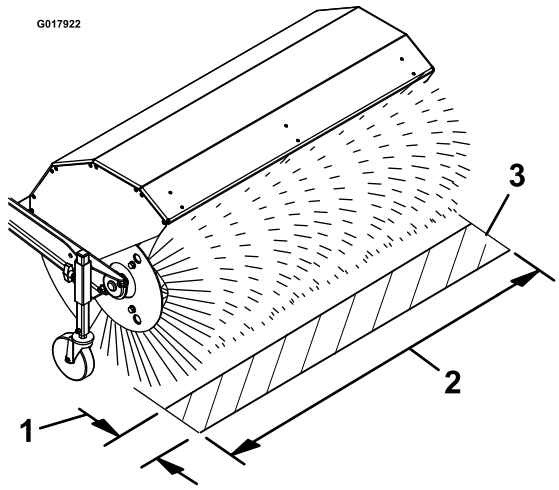

Figure 11

1. 51-102 mm (2–4 inches) maximum width
2. Length of broom
3. Swept area

7. Adjust the broom height if necessary.

Adjusting the Broom Height

1. Drive to a flat dusty area and stop the machine.
2. Disengage the broom and stop the engine.
3. Wait for all moving parts to stop before leaving the operating position.
4. Turn the engine On/Off switch to the Off position.
5. To adjust the broom height, remove and retain the pin from the adjuster sleeve and caster wheel tube.
6. Raise or lower the caster wheel tube to achieve the sweep area as stated in Checking the Sweeping Path (page 12). Select any hole combination that is in alignment to place and latch the retaining pin; match the same position on the other side.
7. For fine tuning adjustments, slide the adjuster sleeve one pin hole up or down on the caster wheel tube to adjust the broom height in 3 mm (1/8 inch) increments (Figure 12). Repeat for the other caster wheel.

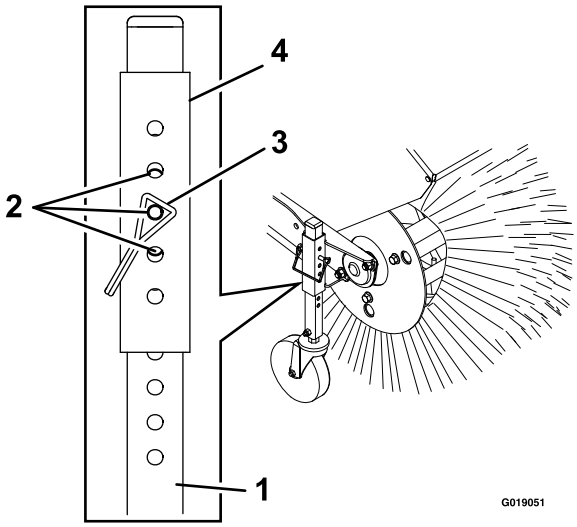

Figure 12

1. Caster wheel tube
2. Positions to achieve 3 mm (1/8 inch) increments
3. Pin
4. Adjuster sleeve

- To raise the broom in 3 mm (1/8 inch) increments, slightly raise the adjuster sleeve and insert the pin into the next pin hole below the current hole used.
- To lower the broom in 3 mm (1/8 inch) increments, slightly lower the adjuster sleeve and insert the pin into the next pin hole above the current hole used.

8. Once the desired height is reached, secure the pin on each caster wheel. Recheck the sweeping area.

Adjusting Broom Side Angle

1. Disengage the broom and stop the engine.
2. Wait for all moving parts to stop.
3. Push the lever down using the right hand thumb (Figure 5).
4. Squeeze the left wheel clutch lever to the handle and push the broom housing to the desired angle; the broom can rotate 19° to the right or left, or straight ahead.
5. Once the broom is positioned, release the broom angle lever. Release the left wheel clutch lever and make sure the broom is locked into place.

Clearing a Clogged Broom

⚠ WARNING

The rotating broom could cause serious injury.

Always use caution when cleaning the broom.

- If the broom becomes clogged, stay in the operating position and release the left hand traction drive lever. While engaging the broom, push down on the handles to raise the front of the machine a few centimeters (inches) off the pavement. Then lift the handles quickly to bump

the front of the machine on the pavement. Repeat if necessary.

- If you cannot unclog the broom by bumping the front of the machine:
  - Park the machine on level ground. Stop the engine, wait for all moving parts to stop, and remove the spark plug wire(s).
  - Sharp objects can become entangled in bristles. Use gloves and caution when cleaning out the broom of foreign objects; not bare hands.

Preventing Freeze-up

- In snowy and cold conditions, some controls and moving parts may freeze. Do not use excessive force when trying to operate frozen controls. If you have difficulty operating any control or part, start the engine and let it run for a few minutes.
- After using the machine, let the engine run for a few minutes to prevent moving parts from freezing. Engage the broom to clear any remaining snow from inside the housing. Stop the engine and wait for all moving parts to stop, and remove the spark plug wire(s). Remove all ice, snow, or other debris from the machine.
- Reconnect spark plug wire(s). With the engine switch in the Off position, pull the recoil starter handle several times to prevent the recoil starter from freezing up.

Transporting the Machine

⚠ WARNING

Loading the machine onto a trailer without strong enough or properly supported ramps could be dangerous. The ramps could collapse causing the unit to fall, which could cause injury.

- **Use proper ramps that are secured to the truck or trailer.**
- **Keep feet and legs out from under the unit when loading and unloading.**
- **If necessary, use assistance when loading.**

Be sure the fuel shut-off valve is closed.

Use a heavy duty trailer to transport the machine. Place the machine in either a forward or reverse gear, then block the wheels.

Securely fasten the machine to the trailer with straps, chains, cables, or ropes.

Be sure that the trailer has all necessary lighting and marking as required by law.

Maintenance

Note: Determine the left and right sides of the machine from the normal operating position.

Recommended Maintenance Schedule(s)

Maintenance Service Interval	Maintenance Procedure
After the first 2 hours	• Check the traction cable. • Check the broom cable.
After the first 5 hours	• Change the engine oil.
Before each use or daily	• Check the engine oil level. • Check for loose hardware. • Check the broom shaft shear pin.
Every 50 hours	• Check the tire pressure. • Check the condition of the belts.
Every 100 hours	• Change the engine oil (more frequently in severe conditions). • Lubricate the broom angle lock pin.
Every 160 hours	• Check the spark plug.
Yearly	• Check the traction cable. • Lubricate the hex shaft. • Check the broom cable.
Yearly or before storage	• Check the air pressure in the drive tires and inflate them to 116–137 kPa (17–20 psi). • Drain the gasoline and run the engine to dry out the fuel tank and the carburetor at the end of the season. • Have an authorized service dealer inspect and replace the traction drive belt, if necessary.

Important: **You can find more information about maintaining and servicing your machine at www.Toro.com.**

Important: **Refer to your engine operator's manual for additional maintenance procedures. For engine adjustments, repairs, or warranty service not covered in this manual, contact an Authorized Kohler Servicing Dealer.**

Checking the Engine Oil Level

Service Interval: Before each use or daily

Engine Oil Type: Toro 4–Cycle Premium Engine Oil

1. Turn off the engine and wait for all moving parts to stop. Make sure the unit is on a level surface.
2. Check the oil level once the engine is cold.
3. Clean the area around the dipstick. Remove the dipstick and wipe the oil off. Insert the dipstick according to the engine manufacturer's recommendations. Remove the dipstick and read the oil level.
4. If the oil level is low, wipe off the area around the oil fill cap, remove the cap and fill to the Full mark on the dipstick. Toro 4-Cycle Premium Engine Oil is recommended; refer to the *Engine Owner's* manual for an acceptable alternative.

Note: Do not overfill.

Note: Do not operate the engine with the oil level below the Low or Add mark on the dipstick, or over the Full mark.

Checking the Traction Cable

Service Interval: After the first 2 hours

Yearly

1. Turn off the engine, wait for all moving parts to stop, and remove the spark plug wire(s).
2. With the traction lever disengaged, check the pin in the elongated slot in the left side of the machine above the tire (Figure 13). There should be a gap of 6 mm (1/4 inch) from the front of the slot to the front edge of the pin. If adjustment is necessary, see Adjusting the Traction Cable (page 18).

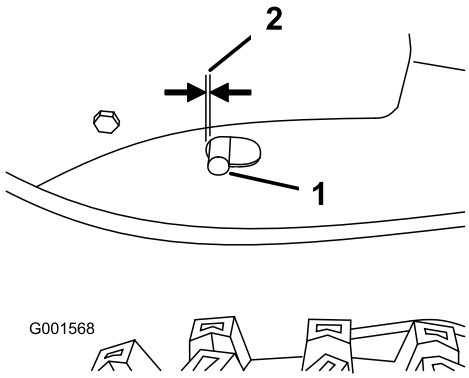

Figure 13

1. Pin
2. 6 mm (1/4 inch)

Checking for Loose Hardware

Service Interval: Before each use or daily

1. Turn off the engine, wait for all moving parts to stop, and remove the spark plug wire(s).
2. Visually inspect the machine for any loose hardware or any other possible problem. Tighten the hardware or correct the problem before operating.

Changing the Engine Oil

Service Interval: After the first 5 hours

Every 100 hours (more frequently in severe conditions).

1. Turn off the engine and wait for all moving parts to stop.
2. Disconnect the wire from the spark plug.
3. Drain the oil while the engine is warm from operation.
4. Place a pan under drain fitting and remove the oil drain plug. Allow the oil to drain and replace the oil drain plug.
5. Clean around the oil fill cap and remove the cap. Fill to the specified capacity and replace the cap. Use the oil recommended in the Checking the Engine Oil Level (page 16) section. Do not overfill.
6. Start the engine and check for leaks. Stop the engine and recheck the oil level.
7. Wipe up any spilled oil from the engine deck mounting surfaces.

Checking the Tire Pressure

Service Interval: Every 50 hours

1. Turn off the engine, wait for all moving parts to stop, and leave engine switch in the Off position.
2. Check the tire pressure in the drive tires.
3. Inflate the drive tires to 117-138 kPa (17-20 psi).

Checking the Condition of the Belts

Service Interval: Every 50 hours

1. Turn off the engine, wait for all moving parts to stop, and remove the spark plug wire(s).
2. Remove the belt cover and engine shield to check the belt condition.

Lubricating the Broom Angle Lock Pin and Hex Shaft

Service Interval: Every 100 hours

Yearly

1. Turn off the engine, wait for all moving parts to stop, and leave the engine switch in the Off position.

2. Lubricate the broom angle lock pin fitting with NGLI grade #2 multi-purpose gun grease.

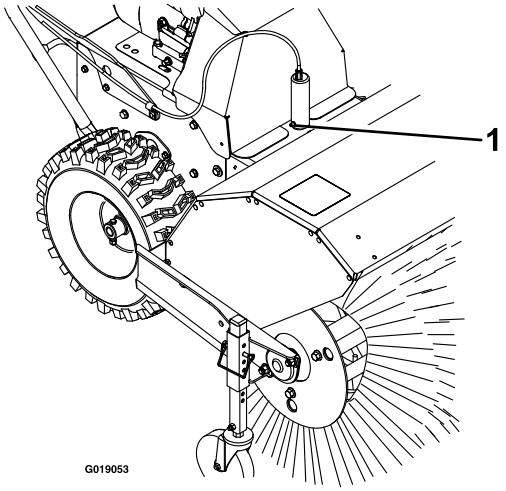

Figure 14

1. Broom angle lock pin

3. Remove the belt cover and engine shield.
4. Move the speed selector lever to position R2.
5. Dip a long, clean, small tipped paint brush in automotive engine oil and lightly lubricate the hex shaft. Rock the machine forward and rearward to rotate the hex shaft.

   Important: Do not get oil on the rubber wheel or the aluminum friction drive plate as the traction drive will slip (Figure 15).

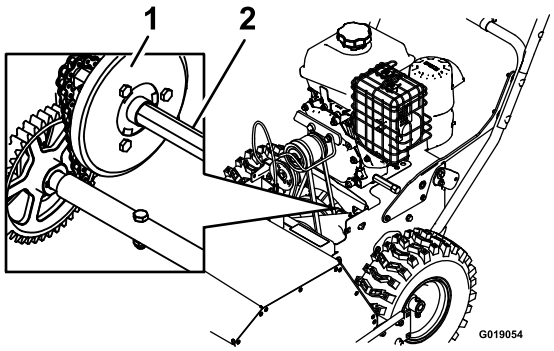

Figure 15

1. Aluminum friction drive plate
2. Hex shaft

6. Move the speed selector lever to position 6.
7. Lubricate the other end of the hex shaft.
8. Move the speed selector lever forward and rearward a few times.
9. Install the belt cover and engine shield.

Checking the Spark Plug

Service Interval: Every 160 hours

Remove the spark plug, check the condition and reset the gap, or replace with a new plug. See your *Engine Owner's Manual*.

Checking the Broom Cable

Service Interval: After the first 2 hours

Yearly

1. Turn off the engine, wait for all moving parts to stop, and remove the spark plug wire(s).
2. Remove the belt cover and engine shield.
3. With the broom lever disengaged, ensure the gap between the broom clutch assembly and the tab is 3.2 mm (1/8 inch). If the broom is not properly adjusted, see Adjusting the Broom Drive (page 18).

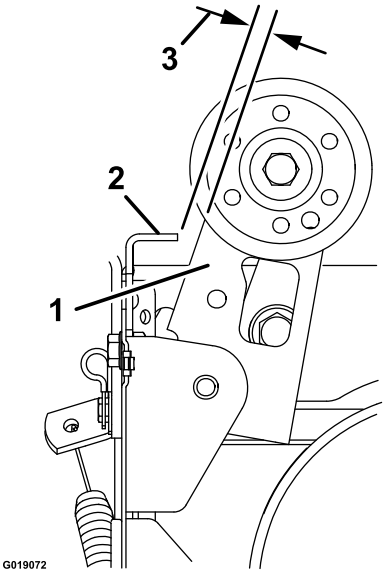

Figure 16

1. Broom clutch assembly
2. Tab
3. 3.2 mm (1/8 inch)

Checking the Broom Shaft Shear Pin

Service Interval: Before each use or daily

1. Move the machine to a level surface.
2. Turn off the engine, wait for all moving parts to stop, and remove the spark plug wire(s).
3. Check the shear pin located on the broom shaft on either side of the gear box.

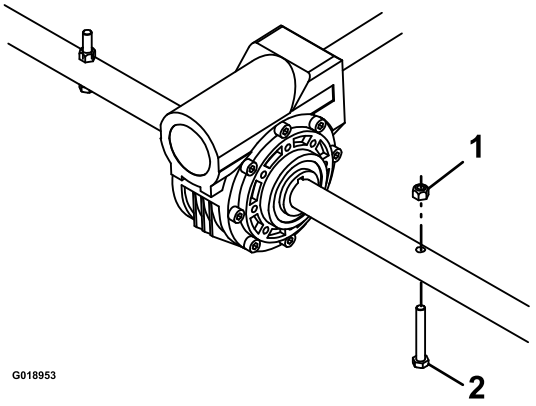

Figure 17

1. Nut
2. Shear pin

4. If the shear pin is damaged, remove the pin and replace with a Toro recommended pin. Secure the pin with a nut.

Checking the Broom Segments

1. Move the machine to a level surface.
2. Turn off the engine, wait for all moving parts to stop, and remove the spark plug wire(s).
3. Raise the broom by resetting the caster positions.
4. On both sides of the unit, remove and retain the outer bearing housing hardware.
5. Manually pull the power unit rearward to remove the broom assembly from the unit.
6. Support the splined shaft on either side of the gearbox.
7. Stand the broom core assembly on end so the removable end retainer plate is facing upward.

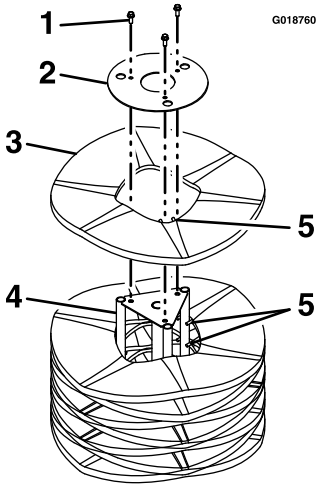

Figure 18

1. Hardware
2. End retainer plate
3. Broom segment
4. Support shaft
5. Alignment fingers

8. Remove and retain the hardware from the end retainer plate.
9. Remove the damaged broom segment(s). Install the new segment(s) by staggering the metal ring alignment fingers as shown in Figure 18.

   Important: Damage may occur to the broom assembly if the broom segments are not properly installed.
10. Install the broom assembly onto the unit.

    Important: Make sure the bearing setscrews are tightened before operating the broom.

Adjusting the Traction Cable

If the machine does not drive in the forward or reverse speeds or it drives when you release the traction lever, adjust the traction cable.

With the traction lever disengaged, check the pin in the elongated slot in the left side of the machine above the tire. There should be a gap of 6 mm (1/4 inch) from the front of the slot to the front edge of the pin (Checking the Traction Cable (page 16)).

If the left hand traction cable is not properly adjusted, do the following steps:

1. Loosen the jam nut.
2. Loosen or tighten the turnbuckle to adjust the pin until it is the proper gap from the front edge of the slot.
3. Tighten the jam nut (Figure 19).

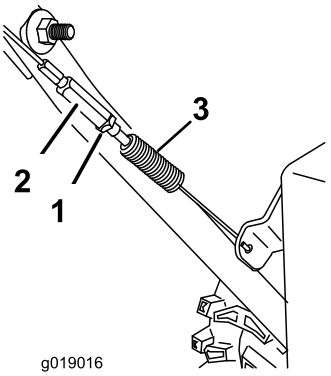

Figure 19

1. Jam nut
2. Turnbuckle

Adjusting the Broom Drive

If the broom cable is not properly adjusted (see Checking the Broom Cable (page 17)), do the following steps:

1. Loosen the jam nut (Figure 20).

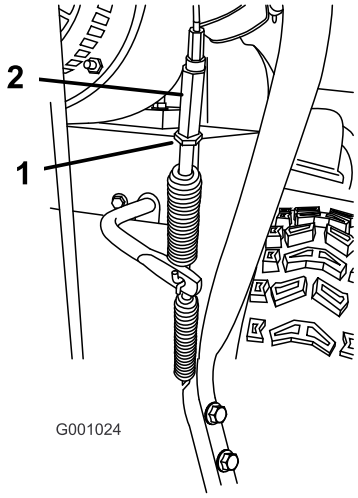

Figure 20

1. Jam nut
2. Turnbuckle

2. Loosen or tighten the turnbuckle that adjusts the tension on the cable (Figure 20).
3. Adjust the turnbuckle until the gap between the broom clutch assembly and the tab is 3.2 mm (1/8 inch) (Figure 16).
4. Tighten the jam nut.
5. If the broom cable is properly adjusted but a problem remains, contact your authorized service dealer.

Adjusting the Wheel Clutch Cable

1. Squeeze the lever fully, then check the gap between the bottom of the handle and the wheel clutch lever end.

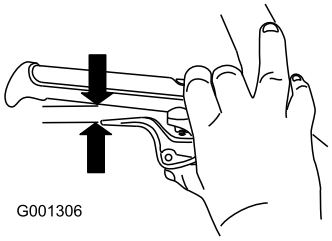

Figure 21

Note: The gap should be approximately the thickness of a pencil (6 mm or 1/4 inch). If it is greater, loosen the cable clamp nut, slide the cable jacket up slightly, tighten the cable clamp nut, and check the gap again.

2. Repeat for the other cable.

Storage

⚠ WARNING

- **Gasoline vapors can explode.**
- **Do not store gasoline more than 30 days.**
- **Do not store the machine in an enclosure near an open flame.**
- **Allow the engine to cool before storing it.**

Preparing the Machine for Storage

1. On the last refueling of the year, add fuel stabilizer to fresh fuel as directed by the engine manufacturer.
2. Run the engine for 10 minutes to distribute the conditioned fuel through the fuel system.
3. Loosen the hose clamp that secures the fuel line to the valve and slide the fuel line off the fuel shutoff valve.
4. Open the fuel shutoff valve and allow the fuel to drain out of the fuel tank into an approved fuel container.
5. Install the fuel line onto the fuel shutoff valve and secure it with a hose clamp.
6. Run the machine until the engine stops from running out of fuel.
7. Prime the engine and start it again.
8. Allow the engine to run until it stops. When you can no longer start the engine, it is sufficiently dry.
9. Stop the engine and allow it to cool.
10. Remove the ignition key.
11. Disconnect the spark plug wire.
12. Remove the spark plug, add 1 oz. (30 ml) of oil through the spark plug hole, and pull the starter rope **slowly** several times to distribute oil throughout the cylinder to prevent cylinder corrosion during the off-season.
13. Loosely install the spark plug.
14. Dispose of any unused fuel properly. Recycle it according to local codes, or use it in your automobile.

    Note: Do not store stabilized fuel for more than 90 days.
15. Clean the machine thoroughly.
16. Touch up chipped surfaces with paint available from an Authorized Service Dealer. Sand affected areas before painting, and use a rust preventative to prevent the metal parts from rusting.
17. Tighten all loose screws, bolts, and locknuts. Repair or replace any damaged parts.
18. Cover the machine and store it in a clean, dry place out of the reach of children. Allow the engine to cool before storing it in any enclosure.

Removing the Machine from Storage

1. Remove the spark plug and spin the engine rapidly using the starter to blow the excess oil from the cylinder.
2. Install the spark plug by hand and then torque it to 20.4 N-m (15 ft-lb).
3. Connect the spark plug wire.
4. Perform the annual maintenance procedures as given in the Recommended Maintenance Schedule.

Troubleshooting

Important: **It is essential that all operator safety mechanisms be connected and in proper operating condition prior to use.**

When a problem occurs, do not overlook the simple causes. For example: starting problems could be caused by an empty fuel tank.

The following table lists some of the common causes of trouble. Do not attempt to service or replace major items or any items that call for special timing of adjustments procedures (such as valves, governor, etc.). Have this work done by your engine service dealer.

Note: When disconnecting electrical connectors, do not pull on the wires to separate the connectors.

Problem	Possible Cause	Corrective Action
The engine will not start, starts hard, or fails to keep running.	1. The fuel tank is empty. 2. The fuel shutoff valve is closed. 3. The throttle and choke are not in the correct position. 4. There is dirt in fuel valve. 5. The fuel cap vent is blocked. 6. Dirt, water, or stale fuel is in the fuel system. 7. The air cleaner is dirty. 8. The spark plug is faulty. 9. The spark plug wire is not connected.	1. Fill the fuel tank. 2. Open the fuel shutoff valve. 3. Be sure the throttle control is midway between the Slow and Fast positions, and the choke is in the On position for a cold engine or the Off position for a warm engine. 4. Clean the fuel valve screen and cup. 5. Clean the fuel cap vent. 6. Contact an authorized service dealer. 7. Clean or replace the air cleaner element. 8. Clean, adjust or replace the spark plug. 9. Check the spark plug wire connection.
The engine loses power.	1. The engine load is excessive. 2. The air cleaner is dirty. 3. The oil level in the crankcase is incorrect. 4. There is dirt in fuel tank filter. 5. Dirt, water, or stale fuel is in the fuel system.	1. Reduce the ground speed or adjust the broom. 2. Clean or replace the air cleaner element. 3. Check the oil level in the crankcase. 4. Clean the fuel tank filter. 5. Contact an authorized service dealer.
The broom does not clean the surface.	1. The broom height is incorrect . 2. The tire pressure in the drive tires is not correct. 3. You are cleaning too much debris at one time.	1. Adjust the broom height. 2. Adjust the tire pressure in the drive tires. 3. Slow down and clear smaller areas of debris.
The broom does not rotate.	1. The broom is clogged. 2. The broom drive lever is not engaged. 3. The broom drive belt is slipping. 4. The belt is broken. 5. The shear pin is broken.	1. Unclog the broom. 2. Engage the broom drive lever. 3. Adjust or replace the belt. 4. Replace the belt. 5. Replace the shear pin.
The machine pulls left or right.	1. The tire pressure in the drive tires is not correct.	1. Adjust the tire pressure in the drive tires.
The machine does not drive.	1. The drive belt is worn, loose or broken. 2. The drive belt is off a pulley.	1. Install a new belt. 2. Replace or adjust the belt.

Problem	Possible Cause	Corrective Action
There is abnormal vibration.	1. The broom assembly is loose or damaged. 2. The engine mounting bolts are loose. 3. engine pulley or idler pulley is loose. 4. The engine pulley is damaged. 5. The belt is damaged.	1. Tighten the hardware. Replace the broom assembly or contact an authorized service dealer. 2. Tighten the engine mounting bolts. 3. Tighten the appropriate pulley. 4. Contact an authorized service dealer. 5. Install a new belt.
The broom does not stop when the drive lever is released.	1. The broom drive belt is out of adjustment.	1. Check the broom drive adjustment.
The broom wears out prematurely.	1. You are using the incorrect broom height.	1. Adjust the broom height.
The speed selector is difficult to move or frozen in place.	1. The hex shaft needs lubrication.	1. Lubricate the hex shaft.

Notes:

The Toro Warranty

SWS
Turf Renovation
and
Tree Care

A limited warranty (see warranty periods below)

Conditions and Products Covered

The Toro Company and its affiliate, Toro Warranty Company, pursuant to an agreement between them, jointly warrant your Toro Products listed below to be free from defects in materials or workmanship.

This warranty covers the cost of parts and labor, but you must pay transportation costs.

The following time periods apply from the date of purchase:

Products	Warranty Period
Turf Renovation	
Walk-Behind Aerator	1 year
▪Engine	2 years
Stand-On Aerator	1 year
▪Battery	90 days Parts and Labor 1 year Parts Only
▪Engine	2 years
Dethatcher	1 year
▪Engine	2 years
Turf Seeder	1 year
▪Engine	2 years
Tree Care	
Log Splitter	1 year
▪Battery	90 days Parts and Labor 1 year Parts Only
▪Engine	2 years
Stump Grinder	1 year
▪Engine	2 years
Brush Chipper	1 year
▪Battery	90 days Parts and Labor 1 year Parts Only
▪Engine	3 years

Where a warrantable condition exists, we will repair the Product at no cost to you including diagnosis, labor, and parts.

Instructions for Obtaining Warranty Service

If you think that your Toro Product contains a defect in materials or workmanship, follow this procedure**:

1. Contact any Authorized Servicing Outlet to arrange service at their dealership. To locate one convenient to you, access our website at www.Toro.com. Select “Where to Buy” and select “Contractor” under product type. You may also call our toll free number below.
2. Bring the product and your proof of purchase (sales receipt) to them.
3. If for any reason you are dissatisfied with the Service Outlet’s analysis or with the assistance provided, contact us at:

   SWS Customer Care Department
   Toro Warranty Company
   8111 Lyndale Avenue South
   Bloomington, MN 55420-1196
   Toll Free: 888-384-9940

**Toro Authorized Rental Customers who have purchased products directly from Toro and have signed the Toro Rental Customer Agreement have the ability to perform their own warranty work. Please visit Toro’s Rental Portal for electronic warranty clam filing procedures or call the toll free number above.

Owner Responsibilities

You must maintain your Toro Product by following the maintenance procedures described in the *Operator’s Manual*. Such routine maintenance, whether performed by a dealer or by you, is at your expense. Parts scheduled for replacement as required maintenance (“Maintenance Parts”), are warranted for the period of time up to the scheduled replacement time for that part. Failure to perform required maintenance and adjustments can be grounds for disallowing a warranty claim.

Items and Conditions Not Covered

Not all product failures or malfunctions that occur during the warranty period are defects in materials or workmanship. This express warranty does not cover the following:

- Product failures which result from the use of non-Toro replacement parts, or from installation and use of add-on, modified, or unapproved accessories
- Product failures which result from failure to perform required maintenance and/or adjustments
- Product failures which result from operating the product in an abusive, negligent or reckless manner
- Parts subject to consumption through use unless found to be defective. Examples of parts which are consumed, or used up, during normal product operation include, but are not limited to, belts, cutters, blades, teeth, spark plugs, tires, filters, etc.
- Failures caused by outside influence. Items considered to be outside influence include, but are not limited to, weather, storage practices, contamination, use of unapproved coolants, lubricants, additives, or chemicals, etc.
- Normal “wear and tear” items. Normal “wear and tear” includes, but is not limited to, worn painted surfaces, scratched decals, etc.
- Any component covered by a separate manufacturer’s warranty
- Pickup and delivery charges

General Conditions

Repair by an Authorized Servicing Outlet or Self-Service as an Authorized Rental Customer is your sole remedy under the warranty.

Neither The Toro Company nor Toro Warranty Company is liable for indirect, incidental or consequential damages in connection with the use of the Toro Products covered by this warranty, including any cost or expense of providing substitute equipment or service during reasonable periods of malfunction or non-use pending completion of repairs under this warranty. All implied warranties of merchantability and fitness for use are limited to the duration of this express warranty. Some states do not allow exclusions of incidental or consequential damages, or limitations on how long an implied warranty lasts, so the above exclusions and limitations may not apply to you.

This warranty gives you specific legal rights, and you may also have other rights which vary from state to state.

Except for the engine warranty coverage and the Emissions warranty referenced below, if applicable, there is no other express warranty. The Emissions Control System on your Product may be covered by a separate warranty meeting requirements established by the U.S. Environmental Protection Agency (EPA) or the California Air Resources Board (CARB). Refer to the California Emission Control Warranty Statement supplied with your Product or contained in the engine manufacturer’s documentation for details.

Countries Other than the United States or Canada

Customers who have purchased Toro products outside the United States or Canada should contact their Toro Distributor (Dealer) to obtain guarantee policies for your country, province, or state. If for any reason you are dissatisfied with your Distributor's service or have difficulty obtaining guarantee information, contact the Toro importer. If all other remedies fail, you may contact us at Toro Warranty Company.

Australian Consumer Law: Australian customers will find details relating to the Australian Consumer Law either inside the box or at your local Toro Dealer.