FORM NO. 3320-780

TORO

MODEL NO. 38054 – 3900001 & UP

OPERATOR'S MANUAL

521 SNOWTHROWER

⚠ SAFETY INSTRUCTIONS

The 521 SNOWTHROWER meets or exceeds the Outdoor Power Equipment Institute's safety standards for snowthrowers; thus, Toro proudly displays the OPEI safety seal. To assure maximum safety, optimum performance, and to gain knowledge of the product, it is essential that you or any other operator of the snowthrower read and understand the contents of this manual before the engine is ever started. Pay particular attention to the safety alert symbol ⚠ which means CAUTION, WARNING OR DANGER — "personal safety instruction." Read and understand the instruction because it has to do with safety. Failure to comply with instruction may result in personal injury.

The following instructions are comparable to the Instructions For Safe Snowthrowing adopted by the American National Standards Institute (ANSI). The snowthrower is designed and tested to offer reasonably safe service; however, failure to comply with the following instructions **MAY RESULT IN PERSONAL INJURY.**

WARNING: Engine exhaust contains carbon monoxide which is an odorless, deadly poison. Carbon monoxide is also known to the State of California to cause birth defects. Do not run engine indoors or in an enclosed area.

BEFORE OPERATING

1. Read and understand the contents of this manual before operating the snowthrower. Become familiar with all controls and know how to stop the engine quickly.
2. Keep everyone, especially children and pets, away from snowthrower and area of operation. Never allow children to operate the snowthrower. Adults should operate the snowthrower only after reading this manual.
3. Inspect area thoroughly where snowthrower will be used. Remove doormats, sleds, boards, sticks, wire, and any other foreign objects which might be picked up and thrown by the snowthrower.
4. Keep all shields and safety devices in place. If a shield, safety device or decal is illegible, damaged or lost, repair or replace it before beginning operation. Also, tighten any loose nuts, bolts or screws.
5. Wear adequate winter clothing and rubber boots that will ensure proper footing on slippery surfaces. Do not wear loose fitting clothing that could possibly get caught in moving parts.
6. Adjust both skids so auger housing clears gravel or crushed rock surfaces.
7. Before starting the engine, ensure auger drive control and traction (wheel drive) control are in disengaged position

©The Toro Company 1992

⚠ SAFETY INSTRUCTIONS

8. Always use a grounded, three wire plug and cord to start snowthrower equipped with an electric starter. Extension cord must be connected to a properly grounded outlet.

9. Fill fuel tank with gasoline before starting the engine. Avoid spilling any gasoline. Because gasoline is highly flammable, handle it carefully. **DO NOT SMOKE WHILE HANDLING GASOLINE.**

A. Use an approved gasoline container.

B. Fill fuel tank outdoors, not indoors. **NEVER ADD FUEL TO AN ENGINE THAT IS RUNNING OR HOT.** Engine must be cool to reduce potential fire hazard.

C. Open doors if engine will be started in the garage because exhaust fumes are dangerous and could possibly be deadly. Do not run engine indoors.

D. Wipe up any spilled gasoline. Reinstall gasoline container cap and snowthrower fuel tank cap securely before starting the engine.

WHILE OPERATING

10. **ROTATING IMPELLER OR AUGER CAN CUT OFF OR INJURE FINGERS OR HANDS. STAY BEHIND THE HANDLES AND AWAY FROM DISCHARGE OPENING WHILE OPERATING THE SNOWTHROWER. KEEP FACE, HANDS, FEET, AND ANY OTHER PART OF YOUR BODY OR CLOTHING AWAY FROM CONCEALED, MOVING OR ROTATING PARTS.**

11. **BEFORE ADJUSTING, CLEANING, REPAIRING, AND INSPECTING THE SNOWTHROWER, AND BEFORE UNCLOGGING THE DISCHARGE CHUTE, SHUT ENGINE OFF AND WAIT FOR ALL MOVING PARTS TO STOP. ALSO, PULL WIRE OFF SPARK PLUG AND KEEP WIRE AWAY FROM THE PLUG TO PREVENT ACCIDENTAL STARTING. USE A STICK, NOT YOUR HAND, TO REMOVE OBSTRUCTIONS FROM DISCHARGE CHUTE**

12. Before leaving the operator's position behind the handles—rotate ignition key to OFF and wait for all moving parts to stop. Remove key from switch if snowthrower will be left unattended.

13. Allow engine to warm up outdoors before clearing snow.

14. Operate the snowthrower only when there is good visibility or light. Always maintain secure footing and balance and keep a firm grip on the handles, especially when operating in reverse. Walk; never run.

15. Be attentive when using the snowthrower, and stay alert for holes in the terrain and other hidden hazards. Be careful when clearing snow from a gravel drive because stones could be picked up and thrown if skids are not adjusted so auger housing clears all rocks.

16. Do not make any adjustments while the engine is running, with the exception of carburetor adjustments.

17. Never direct discharge of snow or operate snowthrower near bystanders, glass enclosures, automobiles and trucks, window wells or a drop off without proper adjustment of the snow chute and deflector angle.

18. Clear snow from slopes by going up and down, never across the face. Use caution when changing directions. Use lower gear when operating on slopes. Never clear snow from steep slopes.

19. Do not overload the snowthrower by clearing snow at too fast a rate.

20. **DO NOT USE SNOWTHROWER ON A ROOF.**

⚠ SAFETY INSTRUCTIONS

21. If a foreign object is hit or snowthrower vibrates abnormally, stop engine by turning key to OFF and wait for all moving parts to stop. Pull wire off spark plug and check snowthrower immediately for possible damage, an obstruction or loose parts. Vibration is generally a sign of trouble. Repair any damage before starting engine and operating snowthrower again.

22. Do not touch engine while it is running or soon after it is stopped because the engine will be hot enough to cause a burn. Do not add oil or check oil level in crankcase when engine is running.

23. Never operate snowthrower at high transport speeds on slippery surfaces. Use care when backing.

MAINTAINING SNOWTHROWER

24. Perform only those maintenance instructions described in this manual. Shut engine off before performing any maintenance service or adjustment. Additionally, pull wire off spark plug and keep wire away from plug to prevent accidental starting. If major repairs are ever needed, contact your local Authorized TORO Service Dealer for assistance.

25. Keep snowthrower in safe operating condition by keeping nuts, bolts, and screws tight. Check engine mounting bolts frequently to assure they are tight.

26. Do not overspeed the engine by changing governor settings. Recommended maximum engine speed is 3500 rpm. To assure safety and accuracy, check maximum engine speed (3500 rpm) with a tachometer.

27. Allow engine to cool before storing in an enclosure such as a garage or storage shed. **NEVER STORE SNOWTHROWER IN HOUSE (LIVING AREA) OR BASEMENT BECAUSE GASOLINE AND FUMES ARE HIGHLY FLAMMABLE, EXPLOSIVE, AND DANGEROUS IF INHALED.** Do not store snowthrower near any open flame or where gasoline fumes may be ignited by a spark.

28. When storing the snowthrower for an extended time—off season storage or 30 days—drain gasoline from fuel tank to prevent a potential hazard. Store gasoline in a safety-approved red metal container. Remove key from ignition switch when storing snowthrower. Store key in a memorable place.

29. At the time of manufacture, the snowthrower conformed with or exceeded OPEI safety standards in effect for snowthrowers. Therefore, to ensure best performance and safety, purchase genuine TORO replacement parts and accessories to keep the TORO all TORO. **NEVER USE "WILL FIT" REPLACEMENT PARTS AND ACCESSORIES.** The TORO logo assures genuineness.

30. For safety reasons, use only those accessories and attachments recommended by The TORO Company to ensure continued safety certification of the product. Using unapproved accessories and attachments could contribute to a potential hazard.

SAFETY INSTRUCTIONS

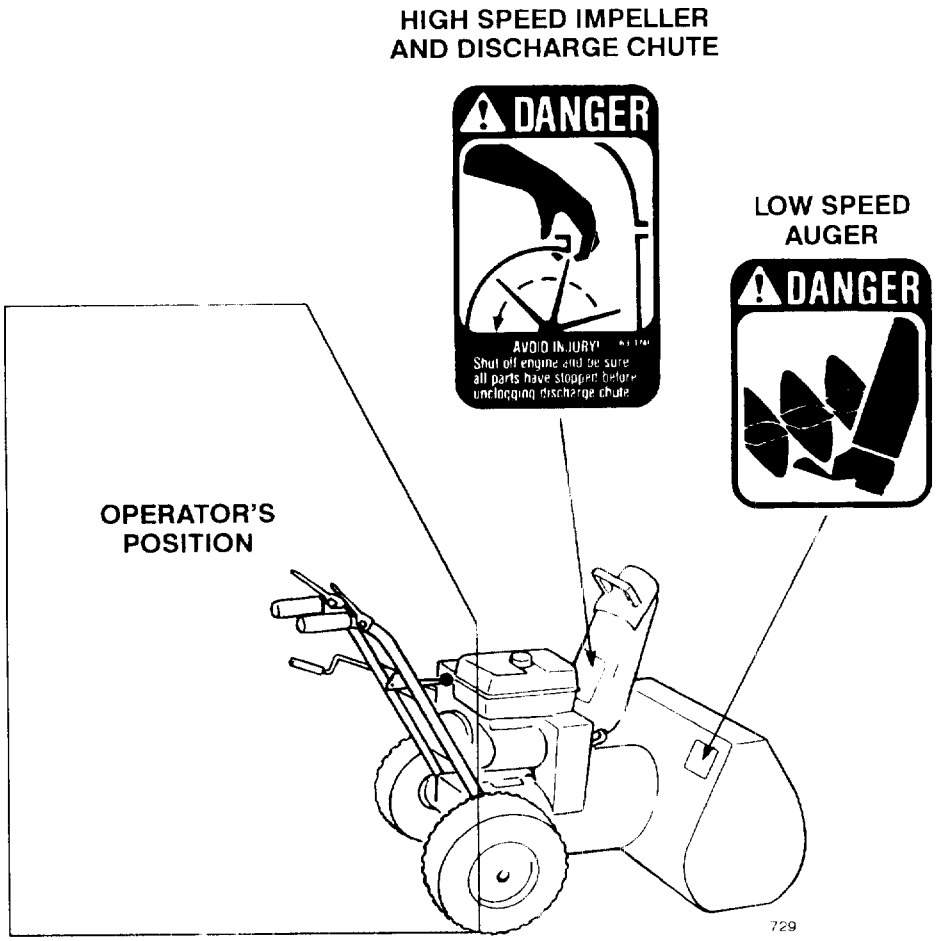

BEFORE OPERATING

Read and understand the contents of this manual before operating the snowthrower. Become familiar with all controls and know how to stop the engine quickly.

SAFETY SYMBOL GLOSSARY

Safety decals and instructions are easily visible to the operator and are located near any area of potential danger. Replace any decal that is damaged or lost.



Safety alert



Slow



Fast



Neutral



Engine speed (Throttle)



Hot surface



Keep hands away



Read and understand operator's manual



Shut off engine before unclogging discharge chute



Avoid injury from rotating auger. Keep hands, feet and clothing away.



Choke on



Choke off



Primer pump

LOOSE PARTS

Part	Qty	Use
Cotter Pin Flat Washer	1 1	Install on Speed Selector Rod
Capscrews & Curved Washers	4	Install Handle
Clevis Pin Cotter Pin Flange Nut	1 1 2	Install Auger & Traction Drive Control Rod
Capscrew & Locknut Locknut & Pyramidal Washer	1 1	Install Chute Control Rod
Flange Head Capscrew	1	Connect Wires
Carriage Bolt Rubber Washer Friction Plate Large Flat Washer Curved Washer Locknut	1 1 1 1 1 1	Secure Chute Deflector
Key	1	Use in Ignition Switch
Registration Card	2	Used to Validate Product Warranty

Specifications and design subject to change without notice.

ACCESSORIES

Description	Part Number
110 Vac Electric Starter Kit	23-3790
Tire Chain Kit	62-7630
Drift Breaker Kit	37-7020
Light Kit	54-9822

TABLE OF CONTENTS

	Page
Safety Instructions	1
Safety Symbol Glossary	5
Loose Parts	6
Accessories	6
Assembly Instructions	7
Before Operating	11
Fill Crankcase With Oil	11
Fill Fuel Tank With Gasoline	13
Controls	13
Starting/Stopping Instructions	14
Operating Instructions	15
Snowthrowing Tips	15
Adjusting Skids and Scraper Blade	16
Maintenance	17
Draining Gasoline	17
Lubricating Snowthrower	18
Changing Crankcase Oil	18
Auger Gear Box	19
Adjusting Auger/Impeller Drive Belt	19
Replacing Auger/Impeller Drive Belt	19
Replacing Traction Drive Belt	20
Adjusting Traction Drive	21
Adjusting Speed Selector	21
Adjusting Carburetor	22
Replacing Spark Plug	23
Preparing Snowthrower for Storage	24
Identification and Ordering	24

ASSEMBLY INSTRUCTIONS

Note: Determine left and right sides of snowthrower by standing in the normal operating position.

INSTALL HANDLE

1. Remove tie straps securing control rods to handle.

2. Remove the axle pins from both wheels and slide the wheels outward on the axle approximately one inch to make clearance for assembly of handles.

3. Position left handle against side of unit, align handle mount holes with holes in side plate, and secure with two capscrews and curved washers until finger tight (Fig. 1).

Note: Concave side of curved washer goes against outside of handle.

Repeat procedure on right side. Make sure handles are at same height before tightening handle screws on both sides of unit.

4. Reinstall the wheels. Note that there are two holes in each end of the axle. Axle pins are installed through holes in the wheel hub and through inner hole of axle (Fig. 2).

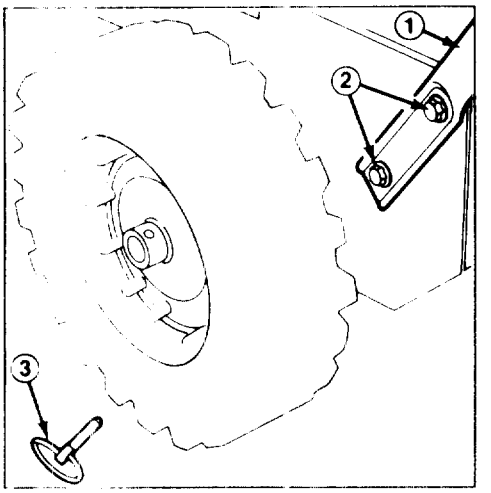

Figure 1

1. Handle
2. Capscrews and curved washers
3. Axle pin

Note: If snowthrower is to be equipped with optional tire chains, wheels must be pinned through outer axle holes.

ASSEMBLY INSTRUCTIONS

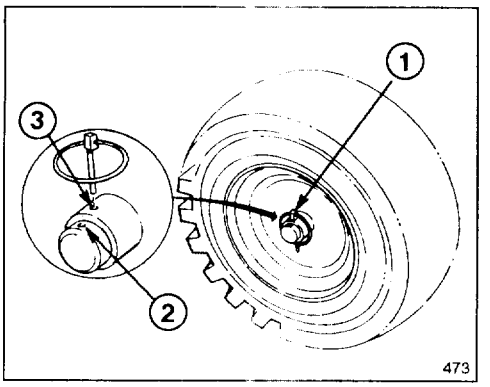

Figure 2

1. Axle pin
2. Outer axle hole
3. Inner axle hole and wheel hub

CONNECT IGNITION WIRES

1. Remove phillips head screw from engine bracket, install wire with smaller connector and reassemble to engine bracket (Fig. 3).

2. Insert flange head capscrew through large connector on remaining wire and install in lower hole in engine bracket (Fig. 3).

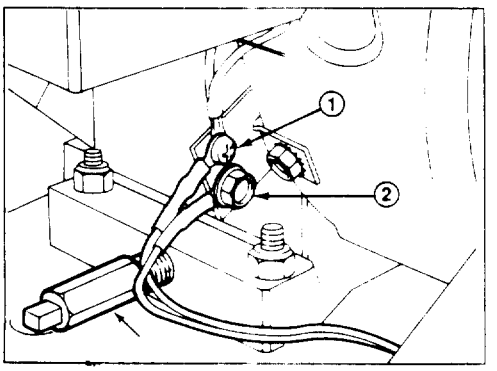

Figure 3

1. Small wire connector and phillips head screw
2. Flange head capscrew and large wire connector

INSTALL SPEED SELECTOR ROD

1. Pull speed selector arm (Fig. 4) to the fully "out" position and move speed selector (Fig. 6) on control panel to the R (REVERSE) position to ease assembly.

2. Install speed selector rod into selector arm, add one flat washer on the selector rod and secure with cotter pin (Fig. 4).

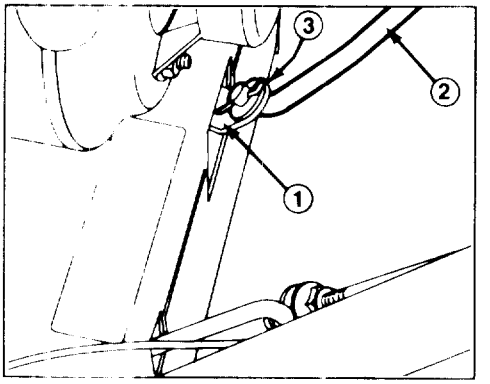

Figure 4

1. Speed selector arm
2. Speed selector rod
3. Flat washer and cotter pin

INSTALL TRACTION ROD

1. Thread a flange nut (flange side down) onto traction rod located on left handle (Fig. 5).

2. Insert traction rod through loop in lower traction rod (Fig. 5).

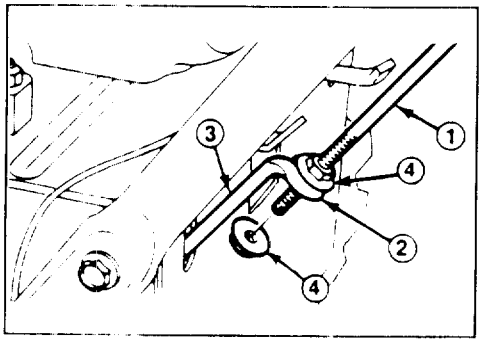

Figure 5

1. Traction rod
2. Loop
3. Lower traction rod
4. Flange nuts

3. Thread a flange nut (flange side up) onto bottom of traction control rod below loop in lower traction rod (Fig. 5).

4. Adjust the two flange nuts up or down on the traction control rod until the distance between the top of the handgrip and the bottom of the traction control lever (Figs. 6 and 7) is approximately four inches. **This is a preliminary setting only.** Tighten the two flange nuts finger tight.

5. Move speed selector (Fig. 6) into third gear.

Note: If speed selector will not move into third gear, an adjustment is necessary: refer to Adjusting Speed Selector, page 21. Make the adjustment before continuing with assembly.

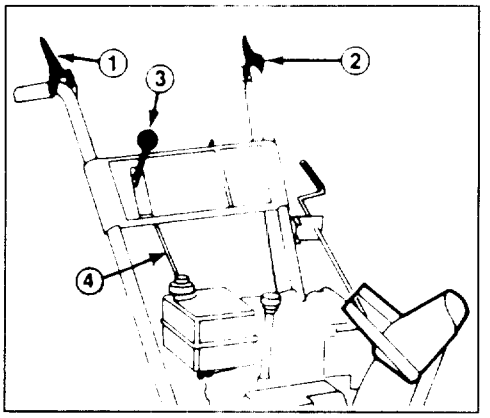

Figure 6

1. Auger control lever
2. Traction control lever
3. Speed selector
4. Speed selector rod

6. Slowly pull machine backward while slowly depressing traction control lever toward handle. Adjustment is correct when wheels stop turning and the distance between the top of the handgrip and the bottom of the traction control lever is one to two inches (Fig. 7). Readjust the two flange nuts, if necessary, to obtain this dimension and then tighten the two flange nuts securely.

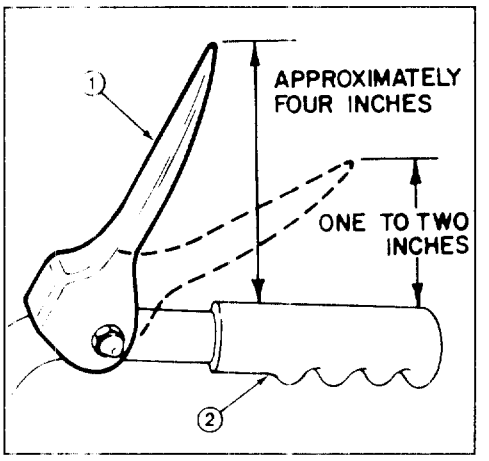

Figure 7

1. Traction control lever 2. Handgrip

INSTALL AUGER DRIVE CONTROL LINKAGE

1. Loosen jam nut above clevis on upper control rod (Fig. 8).

2. Align holes in clevis and lower control rod and insert clevis pin (Fig. 8).

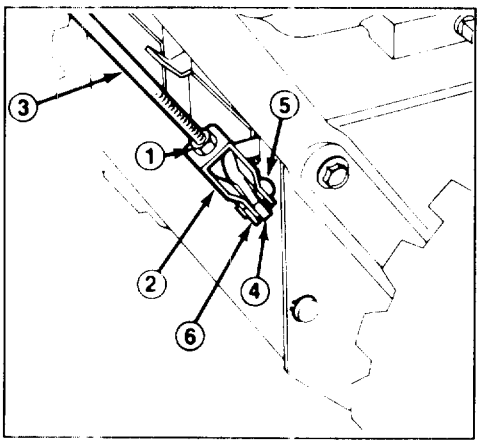

Figure 8

1. Jam nut
2. Clevis
3. Upper control rod
4. Lower control rod
5. Clevis pin
6. Cotter pin

3. Check the distance between the top of the handgrip and the bottom of the auger control lever (Figs. 6 & 9). Distance should be approximately four inches. **This is a preliminary setting only.**

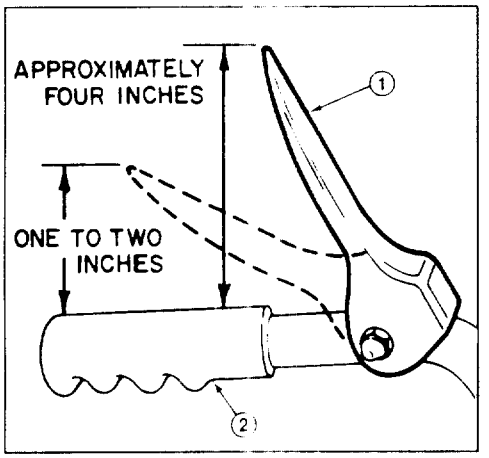

Figure 9

1. Auger control lever 2. Handgrip

4. Compress auger control lever slowly toward handgrip. The amount of force to compress the lever will increase noticeably when slack is removed from the drive belt (approximately one-half of lever movement). Adjustment is correct when the force begins to increase and the distance between the top of the handgrip and the bottom of the auger control lever is one to two inches.

Note: If force does not noticeably increase, remove the belt cover (refer to Replacing Auger Impeller Drive Belt, steps 1-2, page 15) and measure the one to two inch dimension above the handgrip at the point where the slack is removed from the auger drive belt.

5. To adjust the distance, remove clevis pin, loosen jam nut and thread clevis up or down to increase or decrease distance between handgrip and auger control lever (Fig. 8).

6. When adjustment is correct, install clevis pin and secure it in place with the cotter pin. Tighten jam nut to secure clevis (Fig. 8).

INSTALL CHUTE CONTROL ROD

1. Assemble chute control bracket and rod to left side of handle with capscrew and locknut. Leave locknut loose until assembly is completely mounted (Fig. 10).

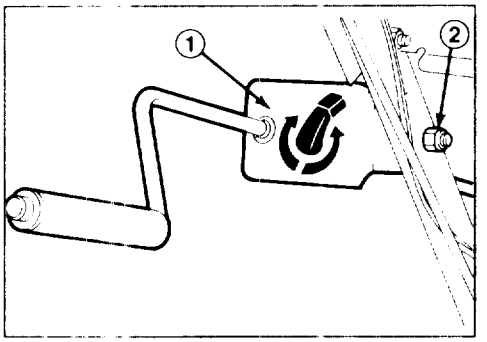

Figure 10

1. Chute control bracket and rod
2. Capscrew and locknut

2. Apply No. 2 general purpose grease to worm gear. Next, mount worm gear and bracket to mounting flange and secure with pyramidal washer and locknut (Fig. 11).

3. Slide worm gear into teeth of chute retaining ring and tighten locknut (Fig. 11).

4. Tighten the locknut securing chute control bracket against left handle (Fig. 10).

5. Check operation of chute control rod. Move worm gear slightly outward if binding is evident.

ASSEMBLY INSTRUCTIONS

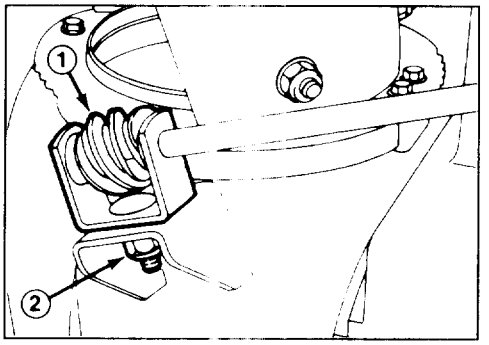

Figure 11

1. Worm gear and bracket
2. Pyramidal washer and locknut

SECURE CHUTE DEFLECTOR

1. Pivot deflector upward and back until deflector stop passes over lip on top of chute.

2. Secure left side of deflector to discharge chute using parts as illustrated (Fig. 12). Make sure rubber washer and friction plate are positioned between chute and deflector and friction plate tabs fit into holes in deflector. See Figure 12 for proper installation sequence of parts.

Note: Concave side of curved washer goes against large flat washer.

3. Tighten nuts on both sides of deflector. Do not over-tighten nuts so that excessive force is required to change deflector angle.

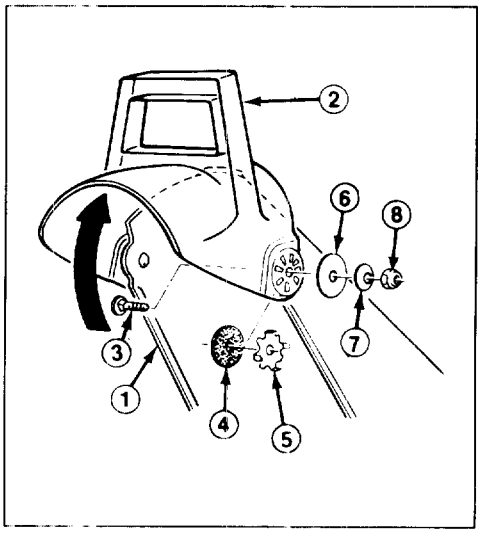

Figure 12

1. Chute
2. Deflector
3. Carriage bolt
4. Rubber washer
5. Friction plate
6. Large flat washer
7. Curved washer
8. Locknut

CHECK TIRE PRESSURE

IMPORTANT: Check pressure of tires because they are over-inflated at the factory for shipping. Therefore, before the snowthrower is operated, reduce pressure in both tires to 7-15 psi equally.

BEFORE OPERATING

FILL CRANKCASE WITH OIL

The engine is shipped from the factory without oil in the crankcase. Therefore, before starting the engine, oil must be added to the crankcase.

IMPORTANT: Check level of oil every 5 operating hours or each time unit is used. Initially, change oil after the first 2 hours of operation; thereafter, under normal conditions, change oil after every 25 hours of operation or annually, whichever comes first.

1. Move unit to a level surface to ensure an accurate oil level reading.

2. Clean area around dipstick to prevent foreign matter from entering filler hole when dipstick is removed.

3. Remove dipstick from crankcase (Fig. 13).

4. Slowly pour 21 ounces (0.621 liters) of SAE 5W-30 or SAE 10 oil into the filler hole. The engine uses any high-quality detergent oil having the American Petroleum Institute (API) "service classification"—SE, SF or SG.

Note: Dipstick must be fully installed to ensure accurate gauging of oil level. DO NOT OVERFILL. POUR OIL SLOWLY.

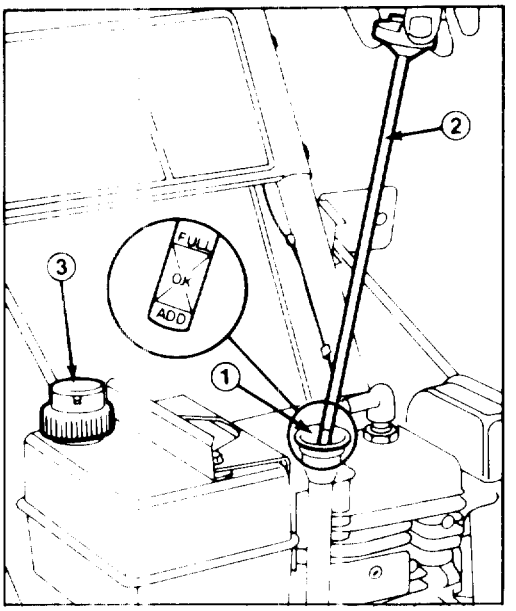

Figure 13

1. Filler hole
2. Dipstick
3. Fuel tank cap

WARNING

DANGER: Because gasoline is flammable, caution must be used when storing or handling it. Do not fill fuel tank while engine is running, hot, or when unit is in an enclosed area. Keep away from open flame and electrical spark. DO NOT SMOKE while filling the fuel tank to prevent the possibility of an explosion. Always fill fuel tank outside and wipe up any spilled gasoline before starting engine. Use a funnel or spout to prevent spilling gasoline. Do not fill tank full. Fill fuel tank to about 1/4 " to 1/2" (6 to 13 mm) from the top of the tank, not into the filler neck. This space is for expansion of fuel.

Store gasoline in a clean, approved container and keep the cap in place on the container. Keep gasoline in a cool, well-ventilated place—never in the house. To assure volatility, do not buy more than a 30 day supply of gasoline. Gasoline is a fuel for internal combustion engines. Therefore, do not use it for any other purpose. Since many children like the smell of gasoline, keep it out of their reach because the fumes are explosive and dangerous to inhale.

BEFORE OPERATING

FILL FUEL TANK WITH GASOLINE

THE TORO COMPANY STRONGLY RECOMMENDS THE USE OF CLEAN, FRESH **UNLEADED** REGULAR GASOLINE IN TORO GASOLINE POWERED PRODUCTS. UNLEADED GASOLINE BURNS CLEANER, EXTENDS ENGINE LIFE, AND PROMOTES GOOD STARTING BY REDUCING THE BUILDUP OF COMBUSTION CHAMBER DEPOSITS. LEADED GASOLINE CAN BE USED IF UNLEADED IS NOT AVAILABLE.

IMPORTANT: NEVER USE METHANOL, GASOLINE CONTAINING METHANOL, GASOHOL CONTAINING MORE THAN 10% ETHANOL, PREMIUM GASOLINE OR WHITE GAS BECAUSE ENGINE FUEL SYSTEM DAMAGE COULD RESULT.

Toro also recommends that Toro Stabilizer/Conditioner be used regularly in all Toro gasoline powered products during operation and storage seasons. Toro Stabilizer/Conditioner cleans the engine during operation and prevents gum-like varnish deposits from forming in the engine during periods of storage.

DO NOT USE FUEL ADDITIVES OTHER THAN THOSE MANUFACTURED FOR FUEL STABILIZATION DURING STORAGE SUCH AS TORO'S STABILIZER/CONDITIONER OR A SIMILAR PRODUCT. TORO'S STABILIZER/CONDITIONER IS A PETROLEUM DISTILLATE BASED CONDITIONER/STABILIZER. TORO DOES NOT RECOMMEND STABILIZERS WITH AN ALCOHOL BASE SUCH AS ETHANOL, METHANOL OR ISOPROPYL. ADDITIVES SHOULD NOT BE USED TO TRY TO ENHANCE THE POWER OR PERFORMANCE OF MACHINE.

1. Clean area around the fuel tank cap (Fig. 13). Remove cap from fuel tank. Using unleaded, regular gasoline, fill tank to within 1/4" to 1/2" (6 to 13 mm) from the top of the tank, not into the filler neck. This space is for expansion of fuel. Do not fill tank full. Reinstall fuel tank cap.

CONTROLS

Auger Drive Control (Fig. 14)—Control has two positions: ENGAGE and DISENGAGE. To engage both auger and impeller, compress lever against right handgrip. To disengage, release lever.

Traction Control (Fig. 14)—To engage traction (wheel drive), lever must be compressed against left handgrip. To stop traction, release lever.

Speed Selector (Fig. 14)—The control has four positions: reverse, 1, 2 and 3. To change speeds, move gear shift to position desired. Lever will lock in notch at each speed selection. Use positions 1,2 or 3 depending on snow conditions.

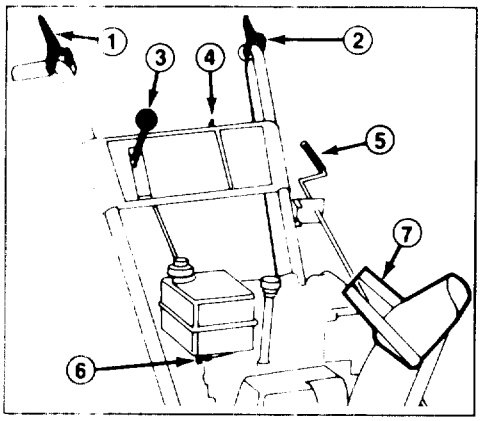

Figure 14

1. **Auger drive control**
2. **Traction control**
3. **Speed selector**
4. **Ignition switch**
5. **Discharge chute control**
6. **Fuel shut-off valve**
7. **Chute deflector handle**

CONTROLS

Ignition Switch (Fig. 14)—Switch has two positions: ON and OFF. Rotate key to ON position before starting engine with the recoil starter. To stop engine, rotate key to OFF.

Throttle (Fig. 15)—Moving the throttle upward increases engine speed.

Choke (Fig. 15)—Rotate choke to FULL choke position to start a cold engine. As engine warms up, move choke gradually to OFF.

Primer (Fig. 15)—Press primer to pump a small amount of gasoline into engine for improved cold weather starting.

Fuel Shut-Off Valve (Fig. 14)—Valve is located under fuel tank. Close valve to stop fuel flow from fuel tank and open valve to allow fuel to flow to the carburetor. Close valve when snowthrower is not in use.

Discharge Chute Control (Fig. 14)—Rotate discharge chute control clockwise to move discharge chute to the left and counterclockwise to move chute to the right.

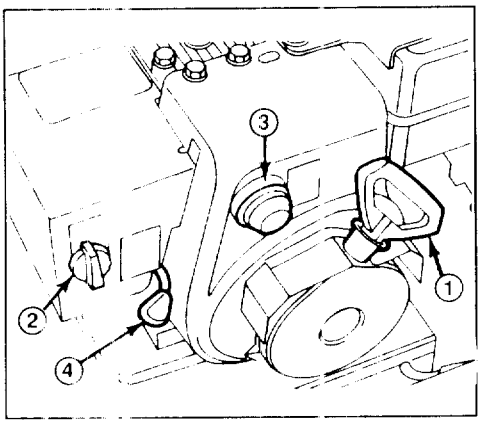

Figure 15

1. Recoil starter
2. Choke
3. Primer
4. Throttle

Recoil Starter (Fig. 15)—Recoil starter is on back side of engine. Pull recoil starter to start engine.

Chute Deflector Handle (Fig. 14)—Deflector handle is on top of discharge chute, and it is used to control height of the snow stream.

STARTING/STOPPING INSTRUCTIONS

TO START ENGINE

Note: If engine is operated when temperature is +40° F (4° C) or higher, remove carburetor heater box (Fig. 16). However the heater box must be reinstalled when temperature falls below +40° F (4° C). To remove heater box

A. Remove (2) phillips screws and (1) hex head screw securing heater box in place (Fig. 16). Pull choke knob off choke rod (Fig. 15).

B. Lift heater box up and away from the engine, and reinstall choke knob on mounting pin

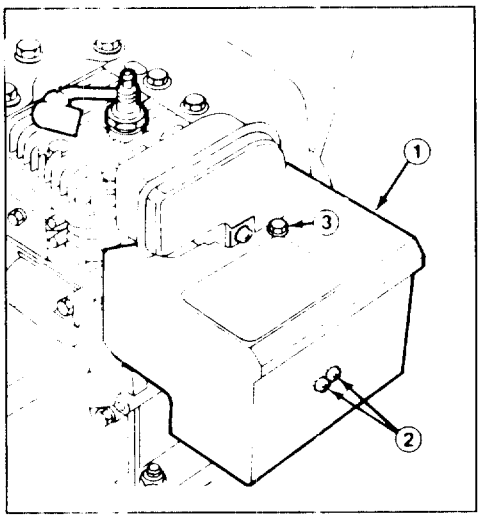

Figure 16

1. Carburetor heater box
2. Phillips screws
3. Hex head screw

STARTING/STOPPING INSTRUCTIONS

IMPORTANT: Check auger and impeller to ensure that both parts are not frozen but free to rotate. Also, make sure discharge chute is not obstructed. **USE A STICK, NOT YOUR HAND, TO REMOVE ANY OBSTRUCTIONS.**

1. Move throttle (Fig. 15) to FAST.

2. Open fuel shut-off valve below fuel tank (Fig. 14)

3. Rotate choke (Fig. 15) to full choke position.

4. Rotate ignition key (Fig. 14) to ON.

5. Cover hole in center of primer with thumb and push primer slowly three times. **DO NOT PRIME IF THE ENGINE HAS BEEN RUNNING AND IS HOT.**

Note: Excessive priming may cause flooding of engine and failure to start.

6. Grasp recoil starter handle (Fig. 15) and pull it out slowly until positive engagement results; then pull vigorously to start the engine. Keep firm grip on starter handle and return the rope slowly.

Note: If engine does not start or if temperature is -10° F (-23° C) or below, additional priming may be required. After each additional prime, try to start the engine before priming again.

7. After engine starts, immediately rotate choke (Fig. 15) to 3/4 position. As engine warms up, rotate choke to 1/2 position; then to OFF position. If engine falters, return choke to 1/2 position. When engine warms sufficiently, rotate choke to OFF position.

BEFORE STOPPING ENGINE

1. Engage auger to clear any remaining snow from inside the housing.

2. Run engine for a few minutes to help dry off any moisture which may have accumulated on engine.

3. With engine running, pull recoil starter with a rapid, continuous full arm stroke three or four times. This helps prevent possible freeze-up of recoil starter due to extreme snow blowing conditions.

Note: Pulling of recoil starter rope produces a loud, clattering sound. This is not harmful to the engine or the starter.

TO STOP ENGINE

1. Release traction and auger drive controls (Fig. 14).

2. Move throttle (Fig. 15) to slow and rotate ignition key (Fig. 14) to OFF.

3. Wait for all moving parts to stop before leaving the operator's position (behind the handles).

OPERATING INSTRUCTIONS

SNOWTHROWING TIPS

1. When snowthrower is not being used, close fuel shut-off valve and remove key from the switch.

2. Remove snow as soon as possible after it falls. This produces best snow removal results.

3. Adjust skids to match the type of surface being cleaned; refer to Adjusting Skids, page 16.

4. The snowthrower is designed to clean snow down to the contact surface, but there are times when the front of the snowthrower may tend to ride up. If this happens, reduce forward speed by shifting into a lower gear. If front still tends to ride up, lift up on both handles to hold down front of snowthrower.

OPERATING INSTRUCTIONS

5. Discharge snow downwind whenever possible, and overlap each swath to ensure complete snow removal. If wheels slip, shift into a lower gear to reduce forward speed.
6. Run snowthrower for a few minutes after clearing snow so moving parts do not freeze. Engage auger to clear any remaining snow from inside housing.
7. Do not overload snowthrower by clearing snow at too fast a rate. If engine slows down, shift to a lower gear to reduce forward speed.
8. Always use full throttle (maximum engine speed) when throwing snow.
9. In wet or slushy conditions, clogging of the discharge chute will be reduced by maintaining maximum engine speed and by not overloading the engine.

DANGER

- ROTATING IMPELLER OR AUGER CAN CUT OFF OR INJURE FINGERS OR HANDS. STAY BEHIND THE HANDLES AND AWAY FROM DISCHARGE OPENING WHILE OPERATING THE SNOWTHROWER. KEEP FACE, HANDS, FEET AND ANY OTHER PART OF YOUR BODY OR CLOTHING AWAY FROM CONCEALED, MOVING OR ROTATING PARTS.

- BEFORE ADJUSTING, CLEANING, REPAIRING AND INSPECTING THE SNOWTHROWER, AND BEFORE UNCLOGGING THE DISCHARGE CHUTE, SHUT ENGINE OFF AND WAIT FOR ALL MOVING PARTS TO STOP. ALSO, PULL WIRE OFF SPARK PLUG AND KEEP WIRE AWAY FROM THE PLUG TO PREVENT ACCIDENTAL STARTING. USE A STICK, NOT YOUR HANDS, TO REMOVE OBSTRUCTIONS FROM DISCHARGE CHUTE.

10. In some snow and cold weather conditions, some controls and moving parts may freeze. Therefore, when any control becomes hard to operate, stop the engine and wait for all moving parts to stop; then check all parts for freeze up. DO NOT USE EXCESSIVE FORCE AND TRY TO OPERATE THE CONTROLS WHEN FROZEN. Free all controls and moving parts before operating.

ADJUSTING SKIDS AND SCRAPER BLADE

FOR CONCRETE OR ASPHALT SURFACES

1. Pull wire off spark plug and make sure wire does not contact plug accidentally.
2. Check the tire pressure in both tires. Make sure that they are inflated equally between 7 and 15 psi.
3. Move snowthrower to a level surface. Next, loosen (4) flange nuts securing both skids to the auger side plates (Fig. 17). Skids must slide up and down.

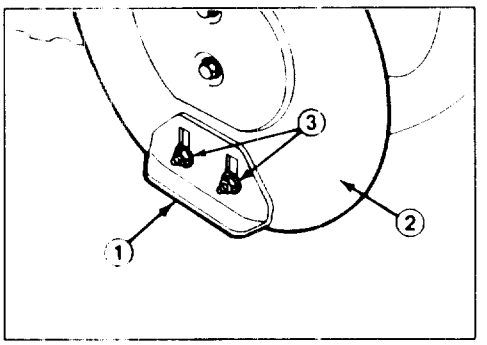

Figure 17

1. Skid
2. Auger side plate
3. Flange nuts

4. Support the auger blades off the ground so that both the scraper and the auger blades (Fig. 18) clear the level surface by at least 1/16 inch.

OPERATING INSTRUCTIONS

Note: The scraper should be higher above the pavement if the pavement surfaces on which the snowthrower will be used are cracked, rough or uneven.

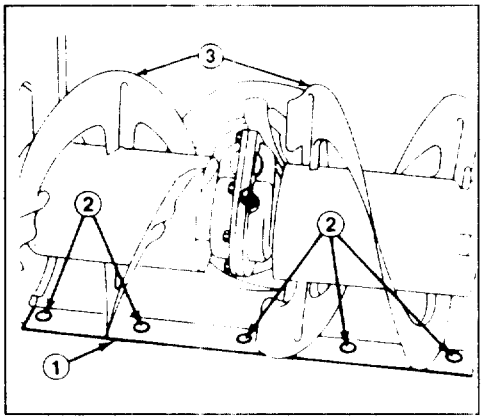

Figure 18

1. Scraper
2. Mounting screws
3. Auger blades

5. Check the scraper blade adjustment. Scraper should be above and parallel to level surface. To adjust scraper, loosen (5) mounting screws, level scraper, and retighten screws.

6. When scraper is adjusted correctly and is supported above level surface move the skids down to sit flat on the ground and tighten the (4) flange nuts securing both skids to the auger side plates. Skids will now support the auger blades and scraper above the ground.

FOR GRAVEL SURFACES

For gravel or crushed rock surfaces, adjust the skids to prevent picking up rocks.

1. Pull wire off spark plug and make sure wire does not contact plug accidentally.

2. Loosen the (4) flange nuts securing both skids to auger side plates. Next slide skids down as far as possible so auger will be supported as far from the level surface as skid adjustment allows; then tighten flange nuts.

MAINTENANCE

WARNING

To prevent accidental starting of the engine while performing maintenance, rotate ignition key to off and remove it from the switch. Next, pull wire off spark plug and make sure wire does not accidentally touch the plug.

DRAINING GASOLINE

1. Close fuel shut-off valve located under fuel tank (Fig. 19).

2. Place a clean drain pan under shut-off valve.

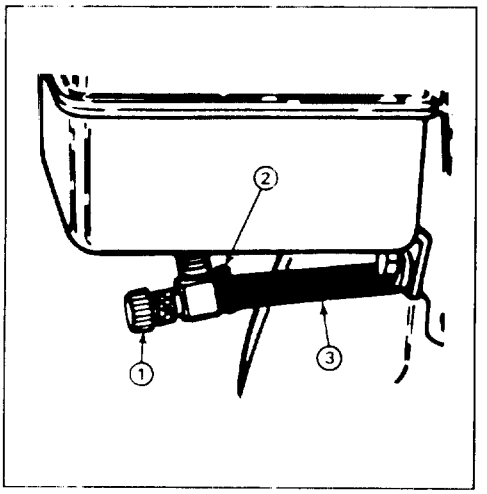

Figure 19

1. Fuel shut-off valve
2. Hose clamp
3. Fuel line

WARNING

Since gasoline is highly flammable, drain it outdoors and make sure engine is cool to prevent a potential fire hazard. Wipe up any gasoline that may have spilled. Do not drain gasoline near any open flame or where gasoline fumes may be ignited by a spark. DO NOT SMOKE a cigar, cigarette or pipe when handling gasoline.

3. Loosen hose clamp securing fuel line to valve and slide line off valve (Fig. 19).

4. Open valve allowing fuel to flow into drain pan.

5. Reinstall fuel line and secure with hose clamp.

LUBRICATING SNOWTHROWER

Lubricate moving parts of the snowthrower after every 15 hours of operation.

1. Pull wire off spark plug and make sure wire does not contact plug accidentally.

2. Drain gasoline from fuel tank; refer to Draining Gasoline, page 17.

3. Tip snowthrower forward onto auger housing and block it so it cannot fall. Now, remove four screws holding bottom cover in place and remove cover (Fig. 20).

4. Lightly lubricate snowthrower with light oil and grease as shown in Figure 21. Wipe up any excess oil or grease.

IMPORTANT: Do not get oil or grease on rubber wheel or friction drive plate because the wheel will slip and the rubber may deteriorate.

5. Reinstall bottom cover with (4) screws.

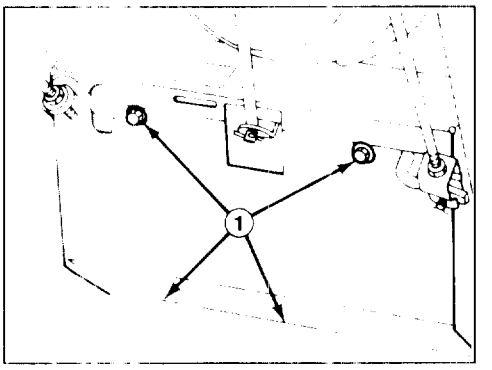

Figure 20
1. Screws

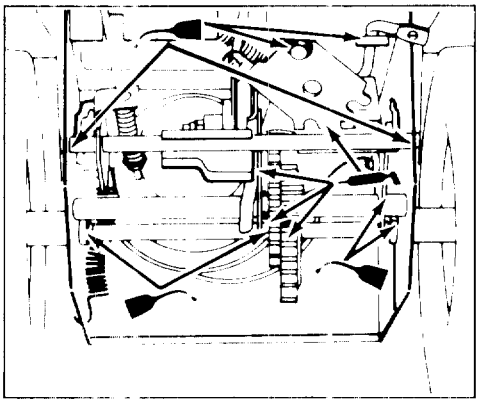

Figure 21

CHANGING CRANKCASE OIL

Initially, change oil after the first 2 hours of engine operation thereafter, under normal conditions, change oil after every 25 hours of engine operation or annually, whichever comes first. If possible, run engine just before changing oil because warm oil flows better and carries more contaminants than cold oil.

1. Pull wire off spark plug and make sure wire does not contact plug accidentally.

2. Block up the rear of the snowthrower chassis and remove the left wheel.

3. Clean area around oil drain plug. Next, slide oil drain pan below drain extension then remove oil drain plug (Fig. 22).

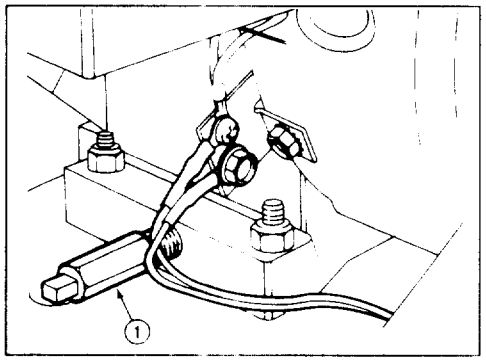

Figure 22

1. Drain plug

4. After all oil is drained, reinstall oil drain plug and left wheel.

5. Position snowthrower on a level surface. Next, fill crankcase with oil: refer to Fill Crankcase With Oil, page 11. Wipe up any oil that may have spilled.

AUGER GEAR BOX

The auger gear box is filled with grease at the factory so regular maintenance is not required.

ADJUSTING AUGER/IMPELLER DRIVE BELT

If auger/impeller belt slips, resulting in decreased snowthrowing performance, either an adjustment or a new belt is required.

1. Check adjustment per steps 4-6 of Install Auger Drive Control Linkage, page 9. Make adjustments if required.

2. Check tension of belt by operating the auger. **If belt still slips, replace the belt. USE ONLY GENUINE TORO REPLACEMENT PARTS.**

REPLACING AUGER/IMPELLER DRIVE BELT

When auger/impeller drive belt (Fig. 23) becomes worn, stretched, oil-soaked or otherwise damaged, belt replacement is required.

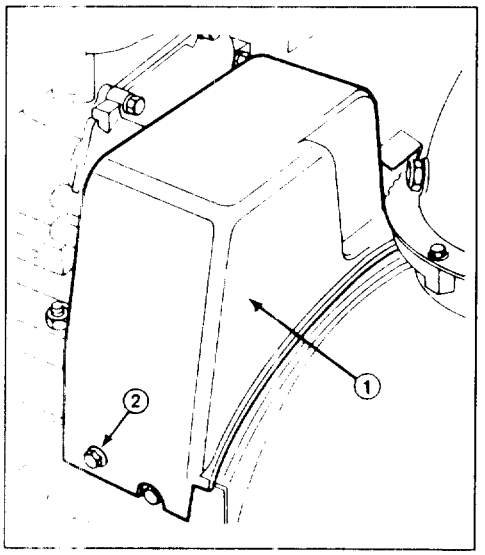

Figure 23

1. Belt cover 2. Screw (2)

1. Pull wire off spark plug and make sure it does not contact the plug accidentally.

2. Remove (2) screws holding belt cover in place and set cover aside (Fig. 23).

3. Remove auger/impeller drive belt from engine pulley and large auger/impeller pulley (Fig. 24).

4. Install new belt around large auger/impeller pulley (Fig. 24). Next, loop belt over engine pulley, making sure that belt is on inside of idler pulley and belt guide (Fig. 24).

5. Adjust auger drive linkage. Refer to steps 4-6 of Install Auger Drive Control Linkage, page 9.

6. Reinstall belt cover with (2) screws.

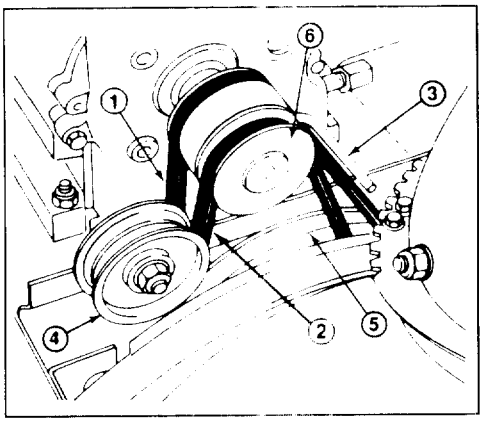

Figure 24

1. Traction drive belt
2. Auger/impeller drive belt
3. Belt guide
4. Idler pulley
5. Large auger/ impeller pulley
6. Engine pulley

REPLACING TRACTION DRIVE BELT

When traction drive belt becomes worn, stretched, oil-soaked or otherwise defective, belt replacement is required.

1. Pull wire off spark plug and make sure it does not contact the plug accidentally.

2. Drain gasoline from fuel tank. Refer to Draining Gasoline page 17.

3. Remove (2) screws holding belt cover in place and set cover aside (Fig. 23).

4. Remove auger/impeller drive belt from engine pulley and large auger/ impeller pulley (Fig. 24).

5. Tip snowthrower forward and block it so it cannot fall.

6. Remove (4) screws securing bottom cover to frame (Fig. 25). Remove bottom cover.

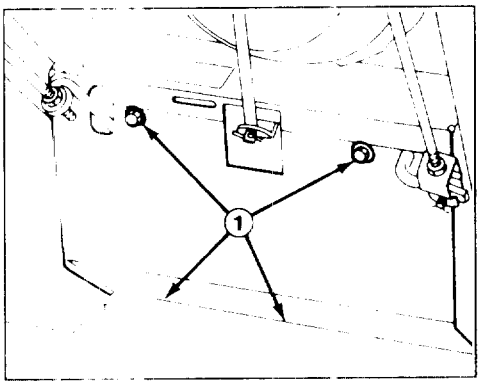

Figure 25

1. Four screws

7. Disconnect spring from notch in bottom edge of side plate (Fig. 26).

CAUTION

Spring is under heavy tension. Use caution when removing.

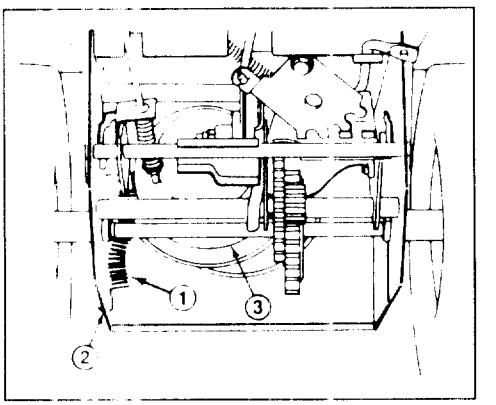

Figure 26

1. Spring
2. Notch in side plate
3. Large traction pulley

8. Set unit upright and remove traction drive belt from engine pulley and large traction pulley (Fig. 24).

9. Install new belt around large traction pulley. Next, loop belt over engine pulley, making sure that belt is on inside of belt guide (Fig. 24).

10. Tip snowthrower forward and block it so it cannot fall.

11. Hook spring into notch in bottom edge of side plate (Fig. 26).

12. Replace bottom cover with four screws and set unit upright.

13. Reinstall auger/impeller drive belt around large auger/impeller pulley and engine pulley, making sure that belt is on inside of idler pulley and belt guide (Fig. 24).

Note: If auger/impeller drive belt is replaced with a new belt, adjust auger drive linkage. Refer to steps 4–6 of Install Auger Drive Control Linkage, page 9.

14. Reinstall belt cover with (2) screws.

ADJUSTING TRACTION DRIVE

If speed selector shifts properly but snowthrower does not drive in reverse or forward speeds an adjustment may be required.

1. Check adjustment per steps 5 and 6 of Install Traction Rod, page 8. Make adjustments if required.

2. If linkage is adjusted correctly and problem persists, contact your local Authorized Toro Service Dealer.

ADJUSTING SPEED SELECTOR

If there is slow or no ground speed in No.1 speed selection, or speed selector cannot be moved into No. 3 speed selection, an adjustment of the speed selector linkage is required.

1. Pull wire off spark plug and make sure wire does not contact plug accidentally.

2. Remove (4) screws securing bottom cover to frame. Remove cover (Fig. 25).

3. Loosen flange nuts securing selector plate to control panel. This allows selector plate to move freely for adjustment (Fig. 27).

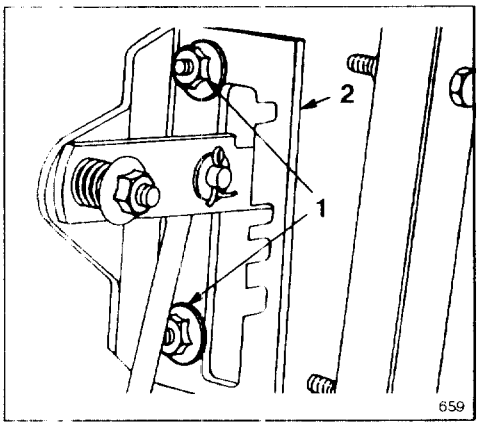

Figure 27

1. **Flange nuts** 2. **Speed selector plate**

4. Shift speed selector to third gear and push down on speed selector plate to move drive assembly to the right. Drive assembly should be 1/8" from roll pin; if not, slide selector plate (Fig. 27) until 1/8" dimension is correct (Fig. 28).

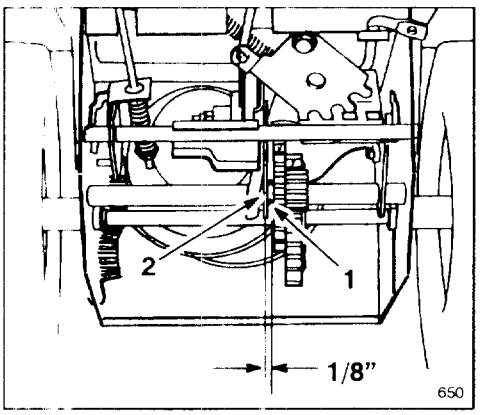

Figure 28

1. **Roll pin** 2. **Drive assembly**

5. With drive assembly 1/8"from the contacting roll pin, tighten flange nuts securing speed selector plate.

6. Shift speed selector to R (REVERSE) and back to third to check adjustment. If space between roll pin and drive assembly is more than 1/16 of an inch (1.6 mm), repeat steps 2–4.

7. Reassemble bottom cover with (4) screws.

ADJUSTING CARBURETOR

The carburetor has been adjusted at the factory, but an occasional adjustment may be required.

1. Remove carburetor heater box: see To Start Engine, paragraph one, steps A & B, page 14

Note: Skip steps 2 and 3 if the engine will start and run.

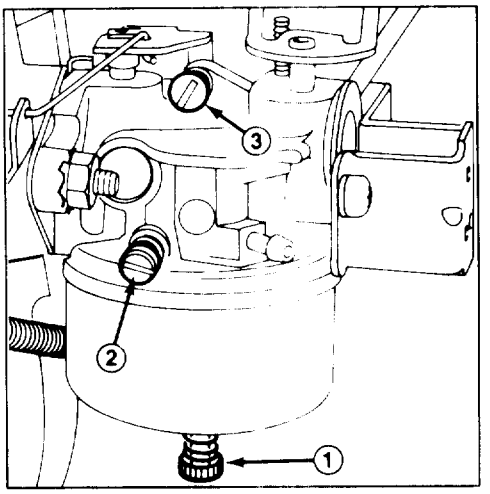

Figure 29

1. Power adjusting screw
2. Idle mixture screw
3. Idle speed screw

2. Power Adjusting Screw (Fig. 29)—Close screw by gently rotating it clockwise until a slight seating resistance is felt. Next, rotate power adjusting screw one full turn—360°—counterclockwise.

IMPORTANT: Do not close power adjusting screw or idle mixture screw too tight because the screw and seat will likely be damaged.

3. Idle Mixture Screw (Fig. 29)—Close screw by gently rotating it clockwise until a slight seating resistance is felt. Next, rotate idle mixture screw 1-1/2 full turns counterclockwise.

4. Start engine and let it warm up for approximately 3 to 5 minutes; then move throttle to FAST.

⚠ WARNING

Engine must be running so final adjustment of the carburetor can be performed. To guard against possible personal injury, move auger drive and traction drive controls to DISENGAGE, and remember to keep hands, feet, face, and other parts of your body or clothing away from muffler, auger, discharge chute, and any moving part(s).

⚠ WARNING

Engine exhaust contains carbon monoxide which is an odorless, deadly poison. Do not run engine indoors or in an enclosed area.

5. Rotate power adjusting screw (Fig. 29) clockwise—in—1/8 turn at a time until engine misses because of a lean gasoline mixture. Then rotate screw counterclockwise—out—1/8 turn at time until engine runs unevenly because of a rich gasoline mixture. Next, rotate power adjusting screw clockwise, back to the midpoint between the rich and lean settings, so engine runs smoothly.

Note: Wait several seconds between each 1/8 turn setting so engine can adjust to the new fuel mixture.

6. Move throttle to idle speed. Next, rotate idle speed screw until engine idles fast—1750 rpm.

7. Rotate idle mixture screw (Fig. 29) clockwise—in—1/8 turn at a time until engine begins to miss because of a lean mixture. Then rotate screw counterclockwise—out—1/8 turn at a time until engine runs unevenly because of rich mixture. Next, rotate idle mixture screw clockwise, back to the mid-point between rich and lean settings.

Note: Wait several seconds between each 1/8 turn setting so engine can adjust to the new fuel mixture.

8. Again, rotate idle speed screw (Fig. 29) until engine idles at 1750 rpm.

9. Check carburetor adjustment by quickly moving throttle from low speed to high speed. Engine should accelerate without hesitation or sputtering. If engine does not accelerate properly, adjust carburetor to a slightly richer mixture. Also, if engine falters under load open power adjusting screw 1/8 turn counterclockwise.

10. After carburetor is adjusted, shut engine off before replacing carburetor heater box

REPLACING SPARK PLUG

Use a Champion RJ-19LM spark plug or equivalent. Set air gap at 0.030" (0.76 mm). Since air gap between center and side electrodes of the spark plug increases gradually during normal engine operation, install a new plug after every 25 hours of engine operation

1. Clean area around spark plug so foreign matter cannot fall into cylinder when plug is removed.

2. Pull wire off spark plug (Fig. 30) and remove plug from cylinder head.

IMPORTANT: A cracked, fouled or dirty spark plug must be replaced.

Do not sand blast, scrape or clean electrodes because grit may eventually release from the plug and fall into the cylinder. The result will likely be engine damage.

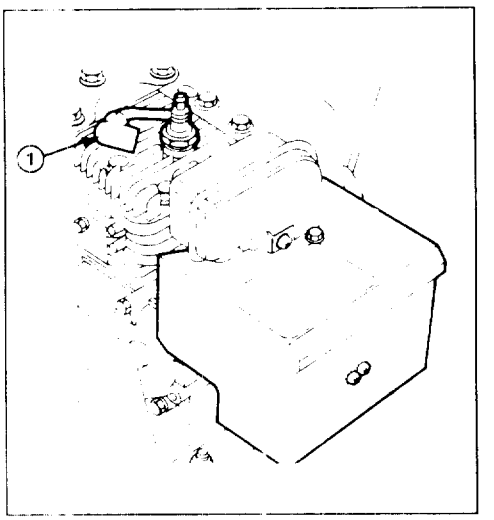

Figure 30

1. Spark plug wire

3. Set air gap between electrodes of new spark plug at 0.030" (0.76 mm) (Fig. 31). Next, install spark plug in cylinder head. Tighten plug to 15 ft-lb (20.4 N·m).

4. Push the wire onto the spark plug (Fig. 30).

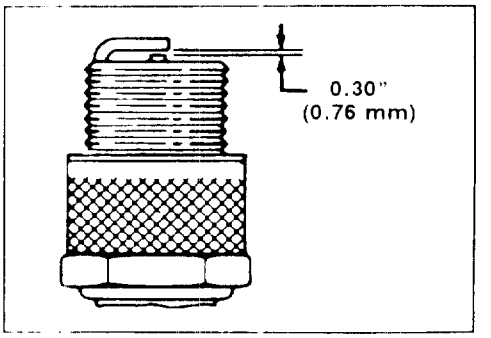

Figure 31

MAINTENANCE

PREPARING SNOWTHROWER FOR STORAGE

1. For long term storage, either drain gasoline from fuel tank or use a fuel additive before storing. To drain gasoline, refer to Draining Gasoline, page 17. After fuel is drained, start engine and let it idle until all fuel is consumed and engine stops. Repeat the starting procedure two more times to ensure all gas is removed from the engine. If gasoline is not drained, gum-like varnish deposits will form and cause poor engine operation and starting problems.

Fuel can be left in gas tank only if a fuel additive, such as Toro's Stabilizer/Conditioner, is added to gasoline and run through engine before storing. Toro's Stabilizer/Conditioner is a petroleum distillate based conditioner/stabilizer. Toro does not recommend stabilizers with an alcohol base, such as ethanol, methanol or isopropyl. Use fuel additive in recommended quantities as specified on container.

Under normal conditions, fuel additives remain effective in fuel for 6–8 months

2. Remove spark plug from cylinder head. Next, pour two teaspoons of engine oil into spark plug hole in cylinder head. Install spark plug in cylinder head, but do not install wire on the plug. Then pull recoil starter slowly to distribute oil on inside of cylinder.

3. Lubricate the snowthrower: refer to Lubricating Snowthrower, page 18. Change crankcase oil: see Changing Crankcase Oil, page 18.

4. Clean the snowthrower. Touch up chipped surfaces with paint. Toro Re-Kote paint is available from an Authorized TORO Service Dealer. Sand affected areas before painting, and use a rust preventative to prevent metal parts from rusting.

5. Tighten all screws and nuts. If any part is damaged, repair or replace it.

6. Store snowthrower in a clean, dry place, and cover it for protection.

IDENTIFICATION AND ORDERING

MODEL AND SERIAL NUMBER

The snowthrower has two identification numbers: a model number and a serial number. The two numbers are stamped on a decal which is located on back of engine mounting plate. In any correspondence concerning the snowthrower, supply model and serial numbers to ensure that correct information and replacement parts are obtained

To order replacement parts from an Authorized TORO Service Dealer, supply the following information:

1. Model and serial numbers of the snowthrower.
2. Part number, description, and quantity of part(s) desired.

Note: Do not order by reference number if a parts catalog is being used; use the PART NUMBER.