FORM NO. 3320-622

TORO®

MODEL NO. 38080 - 2000001 & UP

OPERATOR'S MANUAL

824 SNOWTHROWER

⚠ SAFETY INSTRUCTIONS

The 824 SNOWTHROWER meets or exceeds the Outdoor Power Equipment Institute's safety standards for snowthrowers; thus, Toro proudly displays the OPEI safety seal. To ensure maximum safety, best performance, and to gain knowledge of the product, it is essential that you or any other operator of the snowthrower read and understand the contents of this manual before the engine is ever started. Pay particular attention to the safety alert symbol ⚠ which means CAUTION, WARNING OR DANGER — "personal safety instruction." Read and understand the instruction because it has to do with safety. Failure to comply with instruction may result in personal injury.

The following instructions are comparable to the Instructions For Safe Snowthrowing adopted by the American National Standards Institute (ANSI). The snowthrower is designed and tested to offer reasonably safe service; however, failure to comply with the following instructions **MAY RESULT IN PERSONAL INJURY.**

BEFORE OPERATING

1. Read and understand the contents of this manual before operating the snowthrower. Become familiar with all controls and know how to stop the engine quickly.

2. Keep everyone, especially children and pets, away from snowthrower and area of operation. Never allow children to operate the snowthrower. Adults should operate the snowthrower only after reading this manual.

3. Inspect area thoroughly where snowthrower will be used. Remove doormats, sleds, boards, sticks, wire, and any other foreign objects which might be picked up and thrown by the snowthrower.

4. Keep all shields and safety devices in place. If a shield, safety device or decal is illegible, damaged or lost, repair or replace it before beginning operation. Also, tighten any loose nuts, bolts or screws.

5. Wear adequate winter clothing and rubber boots that will ensure proper footing on slippery surfaces. Do not wear loose fitting clothing that could possibly get caught in moving parts.

6. Adjust both skids so auger housing clears gravel or crushed rock surfaces.

7. Before starting the engine, move auger drive control to OFF (disengage) and wheel drive control to N (neutral).

8. Always use a grounded, three wire plug and cord to start snowthrower equipped with an electric starter. Extension cord must be connected to a properly grounded outlet.

9. Fill fuel tank with gasoline before starting the engine. Avoid spilling any gasoline. Because gasoline is highly flammable, handle it carefully. **DO NOT SMOKE WHILE HANDLING GASOLINE.**

A. Use an approved gasoline container.

B. Fill fuel tank outdoors, not indoors. **NEVER ADD FUEL TO AN ENGINE THAT IS RUNNING OR HOT.** Engine must be cool to reduce potential fire hazard.

C. Open doors if engine will be started in the garage because exhaust fumes are dangerous and could possibly be deadly. Do not run engine indoors.

D. Wipe up any spilled gasoline. Reinstall gasoline container cap and snowthrower fuel tank cap securely before starting the engine.

WHILE OPERATING

10. STAY BEHIND THE HANDLES AND AWAY FROM DISCHARGE OPENING WHILE OPERATING THE SNOWTHROWER. ROTATING IMPELLER OR AUGER CAN CUT OFF OR INJURE FINGERS OR HANDS. KEEP FACE, HANDS, FEET, AND ANY OTHER PART OF YOUR BODY OR CLOTHING AWAY FROM CONCEALED, MOVING OR ROTATING PARTS.

11. BEFORE ADJUSTING, CLEANING, REPAIRING, AND INSPECTING THE SNOWTHROWER, AND BEFORE UNCLOGGING THE DISCHARGE CHUTE, SHUT ENGINE OFF AND WAIT FOR ALL MOVING PARTS TO STOP. ALSO, PULL WIRE OFF SPARK PLUG AND KEEP WIRE AWAY FROM THE PLUG TO PREVENT ACCIDENTAL STARTING. USE A STICK, NOT YOUR HAND, TO REMOVE OBSTRUCTIONS FROM DISCHARGE CHUTE.

©The Toro Company-1991

SAFETY INSTRUCTIONS

12. CHECK THE INTERLOCK SYSTEM EVERY TIME SNOWTHROWER IS USED. FAILURE OF THE INTERLOCK SYSTEM MAY RESULT IN PERSONAL INJURY. AN INOPERATIVE INTERLOCK SYSTEM ALLOWS THE AUGER/IMPELLER AND/OR WHEEL DRIVE TO CONTINUE ROTATING WITH THE ENGINE WHEN THE INTERLOCK LEVER IS RELEASED. IF INTERLOCK SYSTEM DOES NOT OPERATE PROPERLY, DO NOT USE THE SNOWTHROWER. HAVE THE INTERLOCK SYSTEM REPAIRED IMMEDIATELY BY AN AUTHORIZED TORO SERVICE DEALER. DO NOT TRY TO DEFEAT THE INTERLOCK SYSTEM BY DISCONNECTING WIRES OR SWITCHES, OR IN ANY OTHER WAY MAKE IT INOPERATIVE.

13. Before leaving the operator's position—behind the handles—move auger drive control to OFF (disengage), wheel drive control to N (neutral), and rotate ignition key to OFF. Remove key from switch if snowthrower will be left unattended.

14. Move auger drive control to OFF (disengage) before transporting or storing the snowthrower.

15. Engines produce carbon monoxide which is an odorless, deadly poison. Do not run engine indoors or in an enclosed area.

16. Allow engine to warm up outdoors before clearing snow.

17. Operate the snowthrower only when there is good visibility or light. Always maintain secure footing and balance and keep a firm grip on the handles, especially when operating in reverse. Walk; never run.

18. Be attentive when using the snowthrower, and stay alert for holes in the terrain and other hidden hazards. Be careful when clearing snow from a gravel drive because stones could be picked up and thrown if skids are not adjusted so auger housing clears all rocks.

19. Do not make any adjustments while the engine is running.

20. Never direct discharge of snow or operate snowthrower near bystanders, glass enclosures, automobiles and trucks, window wells or a drop-off without proper adjustment of the snow chute and deflector angle.

21. Clear snow from slopes by going up and down, never across the face. Use caution when changing directions. Use lower gear when operating on slopes. Never clear snow from steep slopes.

22. Do not overload the snowthrower by clearing snow at too fast a rate.

23. DO NOT USE SNOWTHROWER ON A ROOF.

24. If a foreign object is hit or snowthrower vibrates abnormally, stop engine by turning key to OFF and wait for all moving parts to stop. Pull wire off spark plug and check snowthrower immediately for possible damage, an obstruction or loose parts. Vibration is generally a sign of trouble. Repair any damage before starting engine and operating snowthrower again.

25. Do not touch engine while it is running or soon after it is stopped because the engine will be hot enough to cause a burn. Do not add oil or check oil level in crankcase when engine is running because this could be a potential hazard.

26. Never operate snowthrower at high transport speeds on slippery surfaces. Use care when backing.

MAINTAINING SNOWTHROWER

27. Perform only those maintenance instructions described in this manual. Shut engine off before performing any maintenance service or adjustment. Additionally, pull wire off spark plug and keep wire away from plug to prevent accidental starting. If major repairs are ever needed, contact your local Authorized TORO Service Dealer for assistance.

28. Keep snowthrower in safe operating condition by keeping nuts, bolts, and screws tight. Check engine mounting bolts frequently to assure they are tight.

29. Do not overspeed the engine by changing governor settings. Recommended maximum engine speed is 3500 rpm. To assure safety and accuracy, check maximum engine speed (3500 rpm) with a tachometer.

30. Allow engine to cool before storing in an enclosure such as a garage or storage shed. **NEVER STORE SNOWTHROWER IN HOUSE (LIVING AREA) OR BASEMENT BECAUSE GASOLINE AND FUMES ARE HIGHLY FLAMMABLE, EXPLOSIVE, AND DANGEROUS IF INHALED.** Do not store snowthrower near any open flame or where gasoline fumes may be ignited by a spark.

31. When storing the snowthrower for an extended time—off season storage or 30 days—drain gasoline from fuel tank to prevent a potential hazard. Store gasoline in a safety-approved red metal container. Remove key from ignition switch when storing snowthrower. Store key in a memorable place.

32. At the time of manufacture, the snowthrower conformed with or exceeded OPEI safety standards in effect for snowthrowers. Therefore, to ensure best performance and safety, purchase genuine TORO replacement parts and accessories to keep the TORO all TORO. **NEVER USE "WILL FIT" REPLACEMENT PARTS AND ACCESSORIES.** The TORO logo assures genuineness.

33. For safety reasons, use only those accessories and attachments recommended by The TORO Company to ensure continued safety certification of the product. Using unapproved accessories and attachments could contribute to a potential hazard.

SAFETY DECALS AND INSTRUCTIONS

Safety decals and instructions are easily visible to the operator and are located near any area of potential danger. Replace any decal that is damaged or lost.

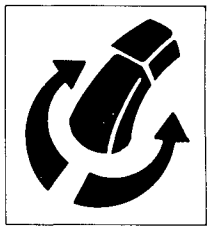

ON CHUTE CONTROL BRACKET
(Part No. 63-3510)



NEAR HANDLE GRIP
(Part No. 29-6360)



ON DISCHARGE CHUTE
(Part No. 63-3760)



ON BACK OF ENGINE
(Part No. 74-1170)



ON AUGER HOUSING
(Part No. 53-7670)



ABOVE CHOKE
(Part No. 39-3850)

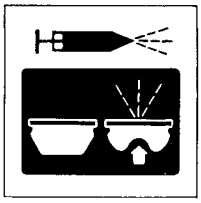

NEAR PRIMER
(Part No. 62-5760)



ON ENGINE
(Part No. 53-7680)

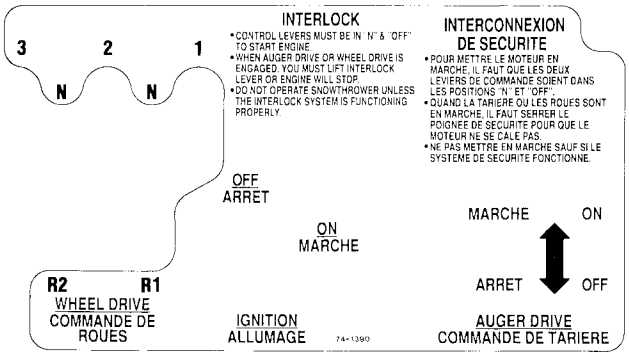

ON CONTROL PANEL
(Part No. 74-1390)

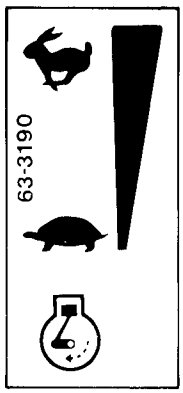

ON ENGINE
(Part No. 63-3190)

LOOSE PARTS

Part	Qty	Use
Capscrew & Washer	4	Install Handles, page 5
Clevis Pin & Cotter Pin	1	Install Auger Drive Control Rod, page 5
Clevis Pin & Cotter Pin	2	Install Wheel Drive Control Rods, page 6
Capscrew & Locknut	1	Install Chute Control Rod, page 7
Carriage Bolt, Locknut, Pyramidal Washer & Washer	1	
Carriage Bolt, Locknut, Belleville Washer & Rubber Washer	2	Install Deflector & Handle, page 7
Key	1	Use in ignition switch
Registration Card	2	Used to validate product warranty

Specifications and design subject to change without notice.

ACCESSORIES

Description	Part Number
110 Vac Electric Starter Kit	37-4810
Tire Chain Kit	56-2700
Snow Cab Assembly	42-3380
Drift Breaker Kit	20-0690
Heavy Duty Skid Kit	20-2850
Light Kit	54-9822

TABLE OF CONTENTS

Page

Safety Instructions 1
Safety Decals and Instructions 3
Loose Parts 4
Accessories 4
Setting Up Instructions 5
Before Operating 8
- Fill Crankcase With Oil 8
- Fill Fuel Tank With Gasoline 9

Controls 10
Starting and Stopping Instructions 11
Operating Instructions 12
- Checking Safety Interlock System 12
- Free Wheeling or Self-Propelled Drive 12
- Snowthrowing Tips 13
- Adjusting Skids 13

Page

Maintenance 14
- Draining Gasoline 14
- Lubricating Snowthrower 14
- Changing Crankcase Oil 14
- Auger Gear Box 15
- Adjusting Traction Drive Linkage 15
- Replacing and Adjusting Traction Drive Belt . 15
- Replacing Auger/Impeller Drive Belt 16
- Adjusting Auger/Impeller Drive Belt 16
- Adjusting Carburetor 17
- Replacing Spark Plug 17
- Preparing Snowthrower for Storage 18

Identification and Ordering 18
The Toro Promise

SETTING UP INSTRUCTIONS

Note: Determine left and right sides of snowthrower by standing in the normal operating position.

INSTALL HANDLES

1. Remove carton from around snowthrower.
2. Remove plastic ties from handles, controls, and any other area of the unit.
3. Slide handles to the inside of the side plates and line up all holes (Fig. 1).

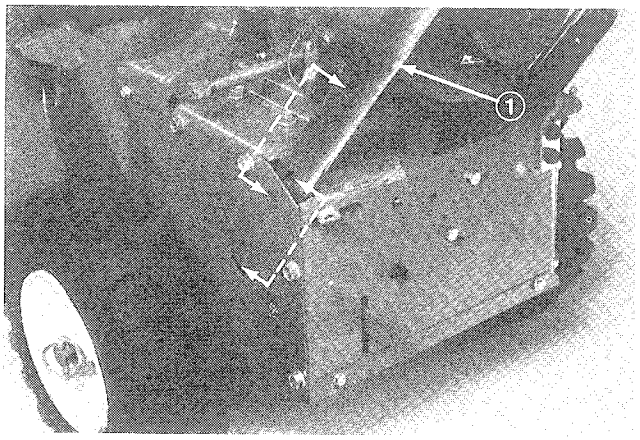

Figure 1

1. Handle

4. Secure handles to side plates with capscrews and washers (Fig. 2).

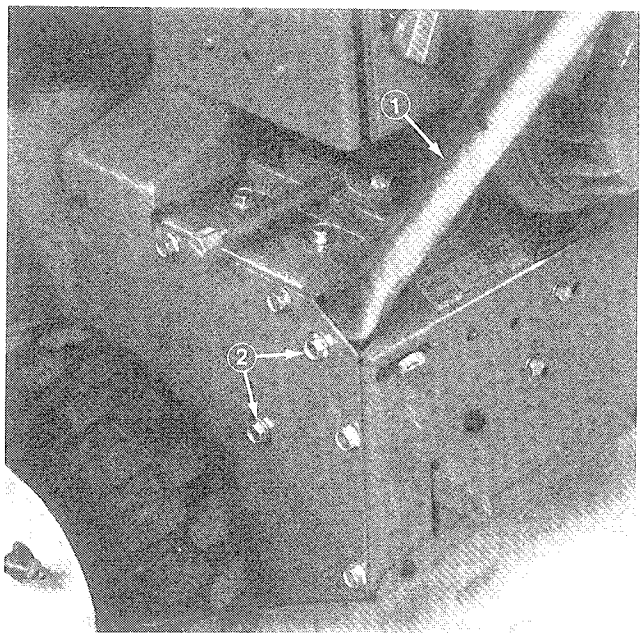

Figure 2

1. Handle
2. Capscrew and washer

INSTALL AUGER DRIVE CONTROL ROD

1. Move auger drive control backward to OFF (disengage) position (Fig. 3).

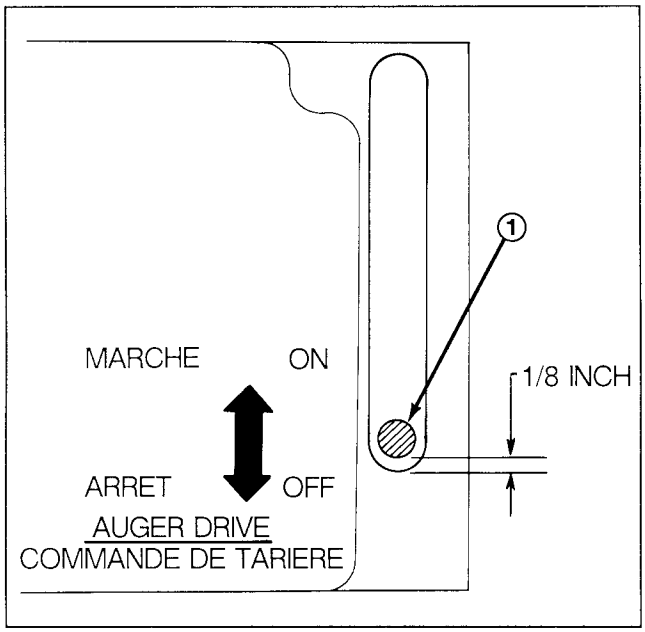

Figure 3

1. Auger drive control

2. Rotate clevis at end of auger drive control rod until holes in clevis line up with hole in bent rod. Temporarily insert clevis pin thru holes (Fig. 4).

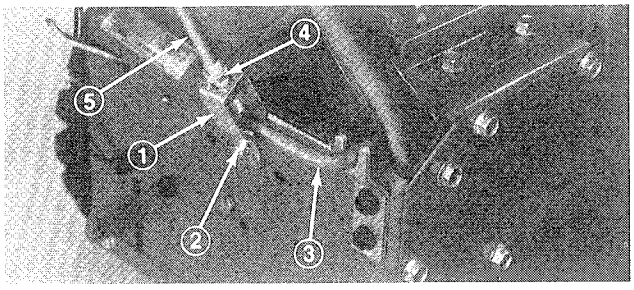

Figure 4

1. Clevis
2. Clevis pin and cotter pin
3. Bent rod
4. Jam nut
5. Auger drive control rod

SETTING UP INSTRUCTIONS

3. Check location of auger drive control in slot on control panel. **BACK EDGE OF AUGER DRIVE CONTROL MUST BE 1/8 INCH FROM REAR OF SLOT (Fig. 3).** Remove clevis pin, rotate clevis up or down on rod, and reinsert clevis pin until 1/8 inch dimension is obtained.

⚠ DANGER

- IMPROPER ADJUSTMENT MAY CAUSE INJURY IF AUGER/IMPELLER TURNS WHEN DISENGAGED.
- ROTATING IMPELLER OR AUGER CAN CUT OFF OR INJURE FINGERS OR HANDS.
- KEEP FACE, HANDS, FEET AND ANY OTHER PART OF YOUR BODY OR CLOTHING AWAY FROM CONCEALED, MOVING OR ROTATING PARTS.
- MAKE CERTAIN THAT AUGER DRIVE CONTROL ADJUSTMENT IS MAINTAINED.

4. Secure clevis pin with cotter pin and tighten the jam nut firmly against top of clevis (Fig. 4).

INSTALL WHEEL DRIVE CONTROL RODS

1. Move wheel drive control lever into No. 1, 1st gear position (Fig. 5).

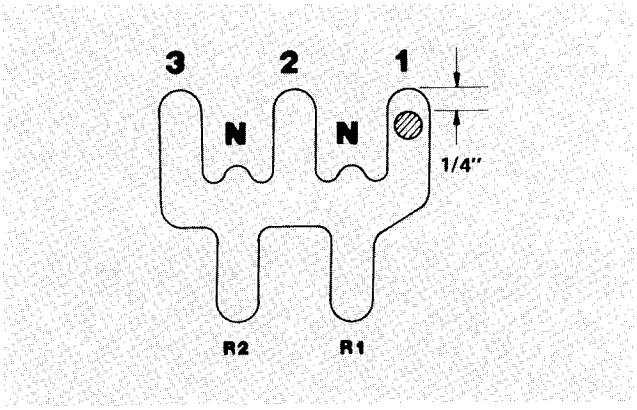

Figure 5

2. Push up on long rod and rotate clevis until clevis pin will fit loosely thru holes in clevis and link arm. Temporarily insert clevis pin and release long rod (Fig. 6).

3. Inspect location of control lever in slot. Control lever must be 1/4 inch from front of slot (Fig. 5).

IMPORTANT: Lever position in slot will vary due to free play in control lever linkage. Be sure to check 1/4 inch dimension with lever at rearmost point of free play.

4. Remove clevis pin, rotate clevis up or down on rod, and reinsert clevis pin until 1/4 inch dimension is obtained.

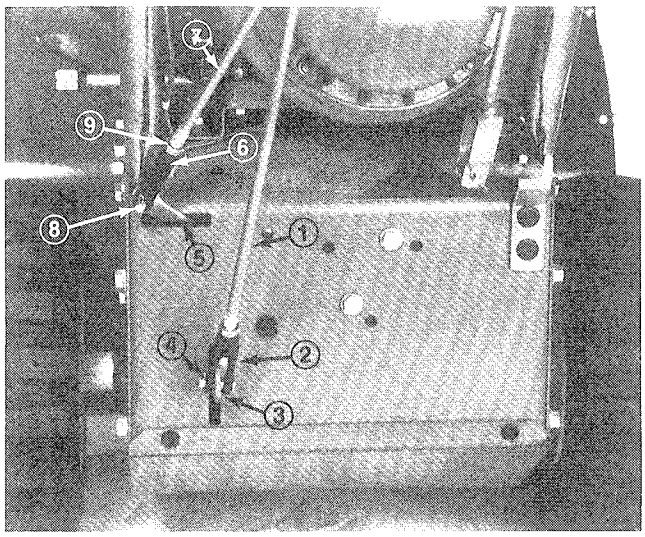

Figure 6

1. Long rod
2. Clevis
3. Link arm
4. Clevis pin and cotter pin
5. Shift arm
6. Clevis
7. Short rod
8. Clevis pin and cotter pin
9. Jam nut

5. Secure clevis pin with cotter pin (Fig. 6).

6. Move wheel drive control lever onto the hump between N and 1 (Fig. 7). Hold wheel drive control lever in this position — on hump.

Note: Lever must be held against the hump, not in the N or 1 position.

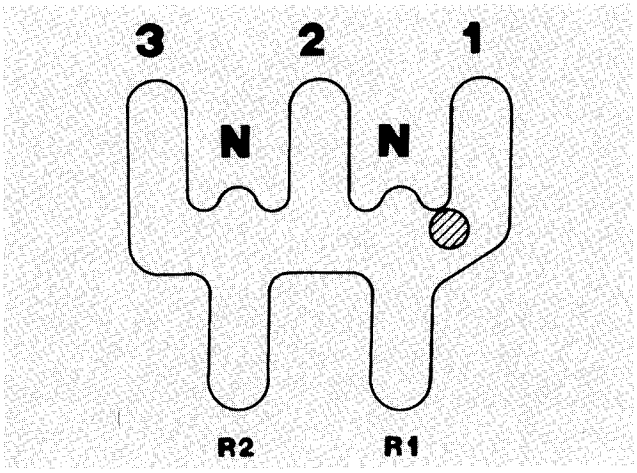

Figure 7

7. Move shift arm (Fig. 6) fully to the left. Next, rotate clevis at end of shortest rod until holes in clevis line up with hole in shift arm (Fig. 6). Secure clevis and shift arm together with clevis pin and cotter pin (Fig. 6).

8. Tighten the jam nut against top of both clevises (Fig. 6).

SETTING UP INSTRUCTIONS

INSTALL CHUTE CONTROL ROD

1. Install chute control bracket and rod against left side of handle with capscrew and locknut; but do not tighten the locknut (Fig. 8).

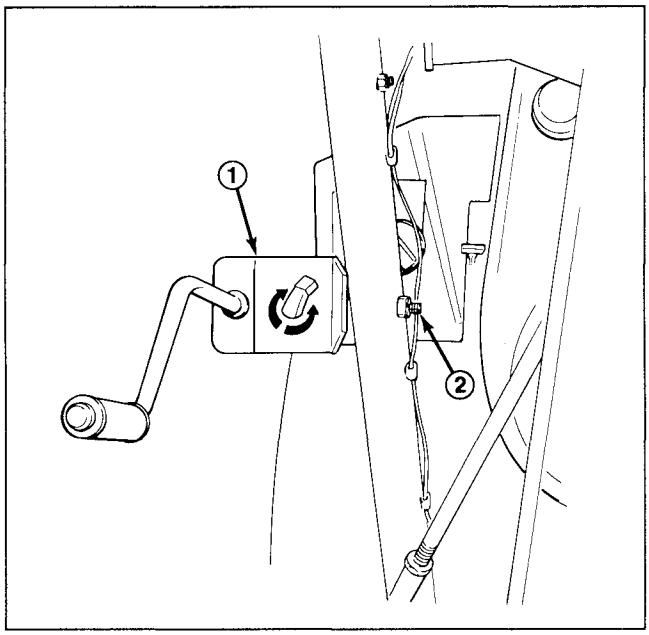

Figure 8

1. Chute control bracket
2. Capscrew and locknut

2. Apply general purpose grease to worm gear. Next, mount worm bracket and gear on top of mounting flange with carriage bolt, pyramidal washer, flat washer and cone locknut (Fig. 9). Do not tighten locknut.

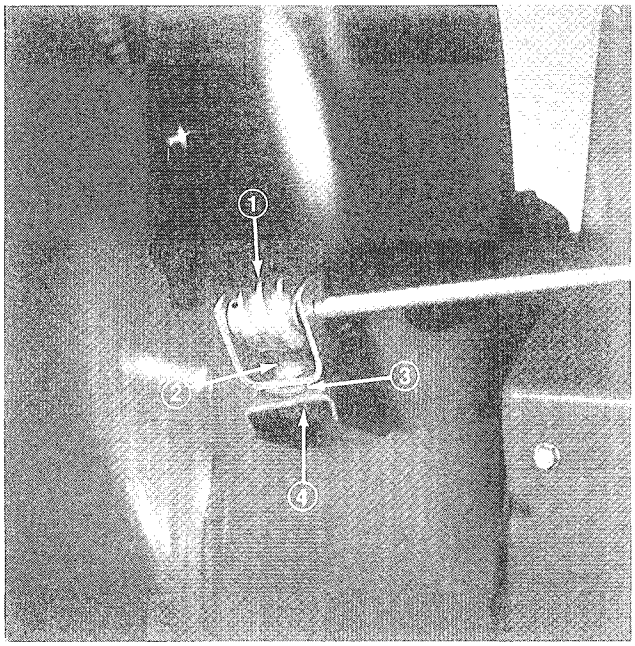

Figure 9

1. Worm gear
2. Carriage bolt
3. Flat washer
4. Pyramidal washer and locknut

Note: Position flat washer between worm bracket and mounting flange.

3. Push worm firmly against teeth in retaining ring; then tighten locknut (Fig. 9). Also tighten locknut holding chute control bracket against left handle (Fig. 8). Check operation by rotating chute control. Repeat if necessary.

INSTALL DEFLECTOR AND HANDLE (Fig. 10)

1. Place carriage bolt thru square hole in chute from the inside of chute.

2. Place rubber washer over bolt and assemble deflector and handle so that rubber washer is between chute and deflector.

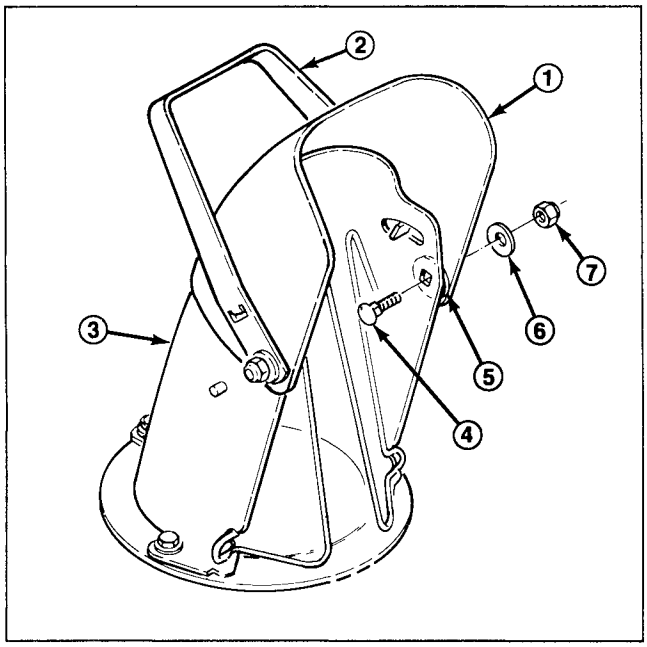

Figure 10

1. Deflector
2. Deflector handle
3. Chute
4. Carriage bolt
5. Rubber washer
6. Belleville washer
7. Locknut

3. Install Belleville washer and locknut on bolt.

4. Repeat for other side of deflector.

5. Tighten nuts on both sides of deflector. Do not over-tighten nuts so that excessive force is required to change deflector angle.

SETTING UP INSTRUCTIONS

CONNECT WIRES

1. Plug handle wires firmly into plug on engine (Fig. 11).
2. Push plastic retaining clip holding the wires into hole on top left of main frame (Fig. 11).

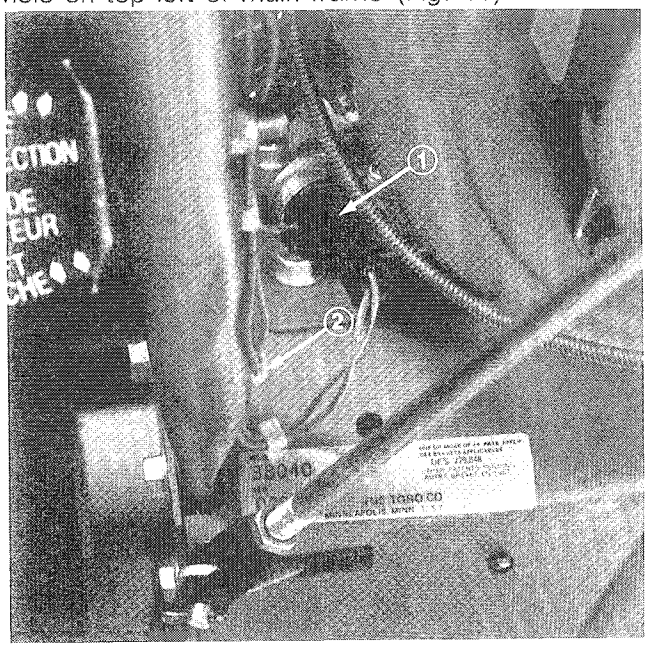

Figure 11

1. Engine plug 2. Retaining clip

CHECK TIRE PRESSURE

IMPORTANT: Check pressure of tires because they are over-inflated at the factory for shipping. Therefore, before the snowthrower is operated, reduce pressure in both tires to 7-15 psi equally.

BEFORE OPERATING

FILL CRANKCASE WITH OIL

The engine is shipped from the factory without oil in the crankcase. Therefore, before trying to start the engine, oil must be added to the crankcase.

IMPORTANT: Check level of oil every 5 operating hours or each time unit is used. Initially, change oil after the first 2 hours of operation; thereafter, under normal conditions, change oil after every 25 hours of operation or annually.

1. Move unit to a level surface to ensure an accurate oil level reading.
2. Clean area around dipstick to prevent foreign matter from entering filler hole when dipstick is removed.
3. Remove dipstick from crankcase (Fig. 12).
4. Slowly pour 24 ounces of SAE 5W-30 or SAE 10 oil into the filler hole. The engine uses any high-quality detergent oil having the American Petroleum Institute (API) "service classification"—SE, SF or SG.

Note: Dipstick must be fully installed to ensure accurate gauging of oil level. DO NOT OVERFILL.

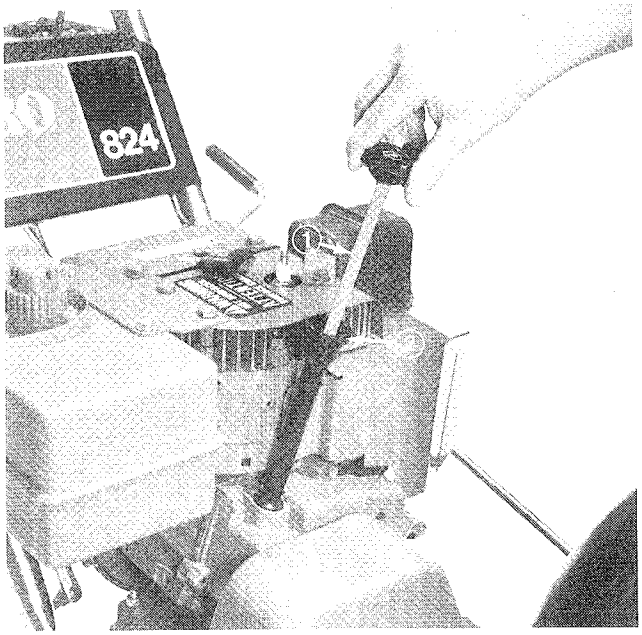

Figure 12

1. Dipstick 2. Filler hole

BEFORE OPERATING

⚠ WARNING

DANGER: Because gasoline is flammable, caution must be used when storing or handling it. Do not fill fuel tank while engine is running, hot or when unit is in an enclosed area. Keep away from open flame and electrical spark. DO NOT SMOKE while filling the fuel tank to prevent the possibility of an explosion. Always fill fuel tank outside and wipe up any spilled gasoline before starting engine. Use a funnel or spout to prevent spilling gasoline. Do not fill tank full. Fill fuel tank to about 1/4 " to 1/2" (6 to 13 mm) from the top of the tank, not into the filler neck. This space is for expansion of fuel.

Store gasoline in a clean, approved container and keep the cap in place on the container. Keep gasoline in a cool, well-ventilated place—never in the house. To assure volatility, do not buy more than a 30 day supply of gasoline. Gasoline is a fuel for internal combustion engines. Therefore, do not use it for any other purpose. Since many children like the smell of gasoline, keep it out of their reach because the fumes are explosive and dangerous to inhale.

FILL FUEL TANK WITH GASOLINE

THE TORO COMPANY STRONGLY RECOMMENDS THE USE OF CLEAN, FRESH **UNLEADED** REGULAR GASOLINE IN TORO GASOLINE POWERED PRODUCTS. UNLEADED GASOLINE BURNS CLEANER, EXTENDS ENGINE LIFE, AND PROMOTES GOOD STARTING BY REDUCING THE BUILDUP OF COMBUSTION CHAMBER DEPOSITS. LEADED GASOLINE CAN BE USED IF UNLEADED IS NOT AVAILABLE.

IMPORTANT: NEVER USE METHANOL, GASOLINE CONTAINING METHANOL, GASOHOL CONTAINING MORE THAN 10% ETHANOL, PREMIUM GASOLINE, OR WHITE GAS BECAUSE ENGINE FUEL SYSTEM DAMAGE COULD RESULT.

Toro also recommends that Toro Stabilizer/Conditioner be used regularly in all Toro gasoline powered products during operation and storage seasons. Toro Stabilizer/Conditioner cleans the engine during operation and prevents gum-like varnish deposits from forming in the engine during periods of storage.

DO NOT USE FUEL ADDITIVES OTHER THAN THOSE MANUFACTURED FOR FUEL STABILIZATION DURING STORAGE SUCH AS TORO'S STABILIZER/CONDITIONER OR A SIMILAR PRODUCT. TORO'S STABILIZER/CONDITIONER IS A PETROLEUM DISTILLATE BASED CONDITIONER/STABILIZER. TORO DOES NOT RECOMMEND STABILIZERS WITH AN ALCOHOL BASE SUCH AS ETHANOL, METHANOL OR ISOPROPYL. ADDITIVES SHOULD NOT BE USED TO TRY TO ENHANCE THE POWER OR PERFORMANCE OF MACHINE.

1. Clean area around the fuel tank cap. Remove cap from fuel tank. Using unleaded, regular gasoline, fill tank to within 1/4" to 1/2" (6 to 13 mm) from the top of the tank, not into the filler neck. This space is for expansion of fuel. Do not fill tank full. Reinstall fuel tank cap.

CONTROLS

Interlock Lever (Fig. 13)—Interlock lever must be compressed against right handle grip when auger drive or wheel drive control is engaged. The engine will shut off if lever is released when auger drive or wheel drive control is engaged. **Check the interlock system every time snowthrower is used.** Refer to Checking Safety Interlock System, page 12.

Auger Drive Control (Fig. 13)—Control has two positions: ON (engage) and OFF (disengage). To engage auger and impeller, push control forward to front of slot. To disengage auger and impeller, pull control backward.

Wheel Drive Control (Fig. 13)—The control has seven positions: N—neutral (2), R1 and R2—reverse, 1, 2, and 3. To change speeds, move gear shift to position desired. Control must be held in R—reverse—when backing. When released, gear shift automatically returns to neutral. Use positions 1,2, and 3 depending on snow conditions. Keep interlock lever compressed when shifting.

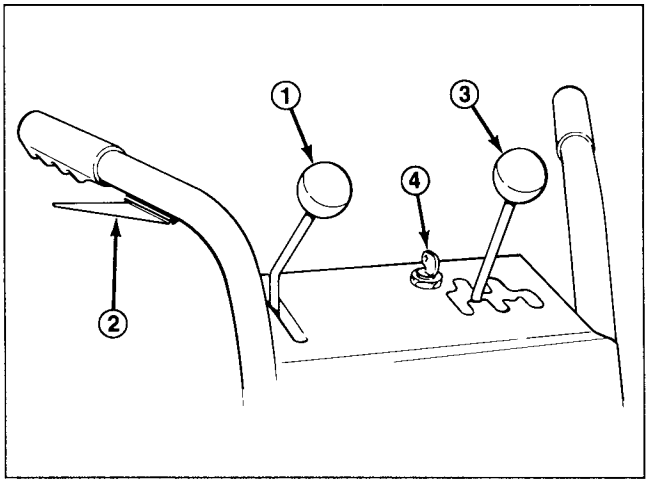

Figure 13

1. Auger drive control
2. Interlock lever
3. Wheel drive control
4. Ignition switch

Throttle (Fig. 14)—Move throttle upward to increase the engine speed.

Ignition Switch (Fig. 13)—Switch has two positions: ON and OFF. Rotate key to ON position before starting engine with the recoil starter. To stop engine, rotate key to OFF.

Choke (Fig. 14)—Rotate choke to FULL choke position to start a cold engine. As engine warms up, rotate choke gradually to OFF.

Primer (Fig. 14)—Press primer to pump small amount of gasoline into engine for improved cold weather starting.

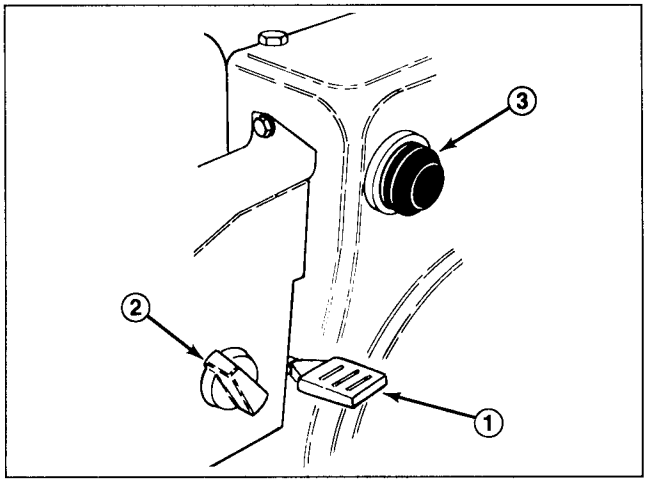

Figure 14

1. Throttle
2. Choke
3. Primer

Fuel Shut-Off Valve (Fig. 15)—Valve is located under fuel tank. Close valve to stop fuel flow from fuel tank and open valve to allow fuel to flow to the carburetor. Close valve when snowthrower is not in use.

Discharge Chute Control (Fig. 15)—Rotate discharge chute control clockwise to move discharge chute to the left and counterclockwise to move chute to the right.

Recoil Starter (Fig. 15)—Recoil starter is on back side of engine. Pull recoil starter to start engine.

Deflector Handle (Fig. 15)—Deflector handle is on top of discharge chute, and it is used to control height of the snow stream.

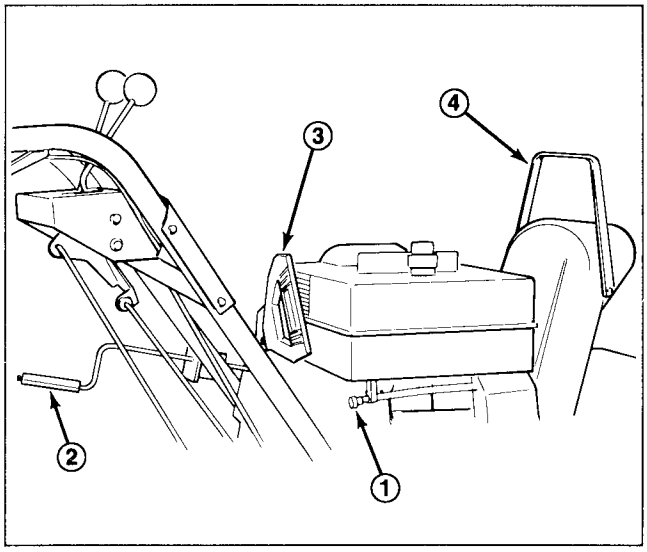

Figure 15

1. Fuel shut-off valve
2. Discharge chute control
3. Recoil starter
4. Deflector handle

STARTING/STOPPING INSTRUCTIONS

TO START ENGINE

Note: If engine is operated when temperature is +40° F (4° C) or higher, remove carburetor heater box. However, the heater box (Fig. 16) must be reinstalled when temperature falls below +40° F (4° C). To remove heater box:

A. Remove mounting screws securing heater box in place. Grasp choke knob and pull it off mounting pin.

B. Lift heater box up and away from the engine, and reinstall choke knob on mounting pin.

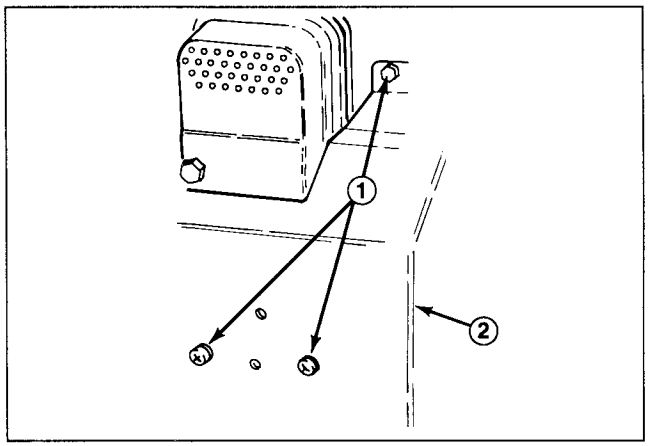

Figure 16

1. Mounting screws
2. Heater box

IMPORTANT: Check auger and impeller to ensure that both parts are not frozen, but free to rotate. Also, make sure discharge chute is not obstructed. USE A STICK, NOT YOUR HAND, TO REMOVE ANY OBSTRUCTIONS.

1. Move auger drive control to OFF (disengage) position (Fig. 17).

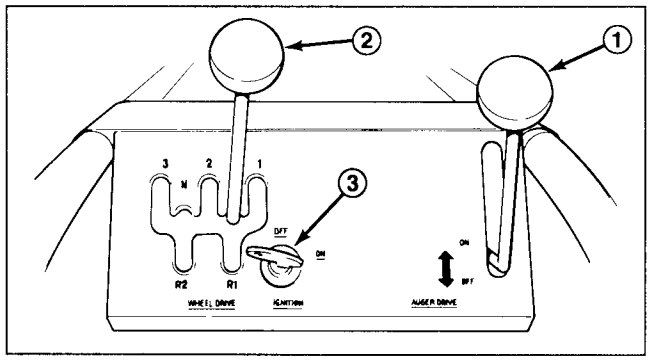

Figure 17

1. Auger drive control
2. Wheel drive control
3. Ignition switch

2. Move wheel drive control (Fig. 17) to N—neutral—and throttle (Fig. 18) to FAST.

3. Open fuel shut-off valve below fuel tank (Fig. 15).

4. Move choke to full choke position (Fig. 18).

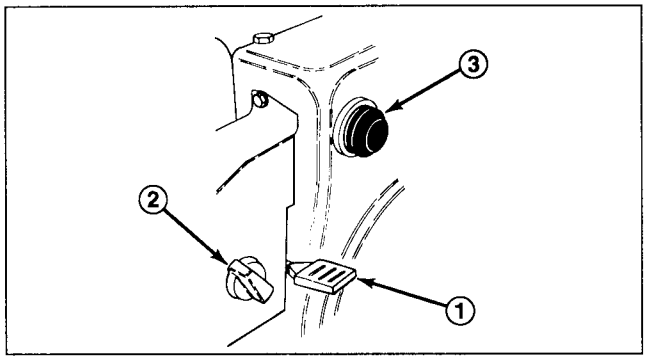

Figure 18

1. Throttle
2. Choke
3. Primer

5. Rotate ignition key to ON (Fig. 17).

6. Depress primer (Fig. 18) three times.

7. Grasp recoil starter handle (Fig. 15) and pull it out slowly until positive engagement results; then pull vigorously to start the engine. Keep firm grip on starter handle and return the rope slowly.

Note: If engine does not start or if temperature is -10° F or below, additional priming may be required.

8. After engine starts, immediately move choke (Fig. 18) to 3/4 position. As engine warms up, move choke to 1/2 position; then to OFF position. If engine falters, return choke to 1/2 position. When engine warms sufficiently, move choke to OFF position.

BEFORE STOPPING ENGINE

1. Engage impeller to clear any remaining snow from inside the housing.

2. Run engine for a few minutes to help dry off any moisture which may have accumulated on engine.

3. With engine running, pull recoil starter with a rapid, continuous full arm stroke three or four times. This helps prevent possible freeze-up of recoil starter due to extreme snow blowing conditions.

Note: Pulling of recoil starter rope produces a loud, clattering sound. This is not harmful to the engine or the starter.

TO STOP ENGINE

1. Move wheel drive control to N—neutral—and auger drive control to OFF (disengage).

2. Move throttle to slow and rotate ignition key to OFF.

OPERATING INSTRUCTIONS

CHECKING SAFETY INTERLOCK SYSTEM

The safety interlock system (Fig. 19) stops the engine if the operator releases the interlock lever before moving the wheel drive control to N — neutral — and auger drive control to OFF (disengage). To keep engine running when wheel drive is in gear or when auger drive control is ON (engaged), the interlock lever (Fig. 19) must be compressed against handle grip. This system also prevents the operator from starting the engine with the wheel drive control in gear or auger drive control engaged.

DANGER

- CHECK THE INTERLOCK SYSTEM EVERY TIME SNOWTHROWER IS USED.
- FAILURE OF THE INTERLOCK SYSTEM MAY RESULT IN PERSONAL INJURY.
- AN INOPERATIVE INTERLOCK SYSTEM WILL ALLOW THE AUGER/IMPELLER AND/OR WHEEL DRIVE TO CONTINUE ROTATING WITH THE ENGINE WHEN THE INTERLOCK LEVER IS RELEASED.
- ROTATING IMPELLER OR AUGER CAN CUT OFF OR INJURE FINGERS OR HANDS.
- IF INTERLOCK SYSTEM DOES NOT OPERATE PROPERLY, DO NOT USE THE SNOWTHROWER. HAVE THE INTERLOCK SYSTEM REPAIRED IMMEDIATELY BY AN AUTHORIZED TORO SERVICE DEALER. DO NOT TRY TO DEFEAT THE INTERLOCK SYSTEM BY DISCONNECTING WIRES OR SWITCHES, OR IN ANY OTHER WAY MAKE IT INOPERATIVE.

To check interlock system:

1. Push snowthrower outdoors onto a flat, open area. Start the engine: refer to Starting and Stopping Instructions, page 11.

2. Slowly move auger drive control to ON (engage) while interlock lever is fully released. **IF ENGINE DOES NOT SHUT OFF, DO NOT USE THE SNOWTHROWER. HAVE THE INTERLOCK SYSTEM REPAIRED IMMEDIATELY BY AN AUTHORIZED TORO SERVICE DEALER.**

Note: In order to avoid restarting the snowthrower after steps 2 and 3 (when system operates correctly), move control back to OFF (or N) when engine begins to shut off.

3. Slowly move wheel drive control to No. 1 — 1st gear — while interlock lever is fully released. **IF ENGINE DOES NOT SHUT OFF, DO NOT USE THE SNOWTHROWER. HAVE THE INTERLOCK SYSTEM REPAIRED IMMEDIATELY BY AN AUTHORIZED TORO SERVICE DEALER.**

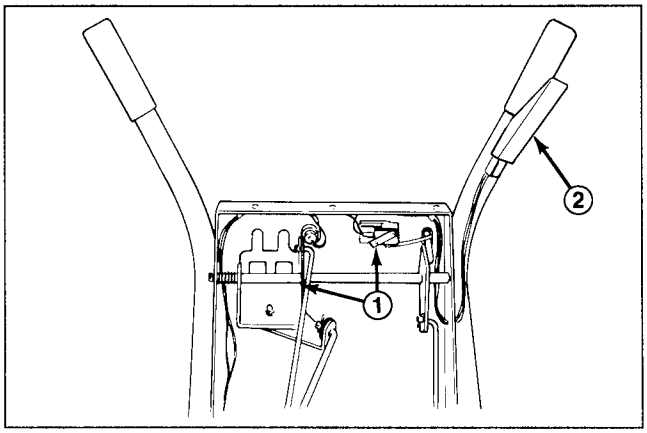

Figure 19

1. Switch
2. Interlock lever

FREE WHEELING OR SELF-PROPELLED DRIVE

The snowthrower can be free wheeled or engaged for self-propelled operation. There are two holes in each end of the axle. When axle pins are thru outer axle holes and not thru wheel hub (Fig. 20), snowthrower free wheels. By contrast, when pins are installed thru holes in wheel hub and inner hole of axle (Fig. 20), snowthrower propels itself.

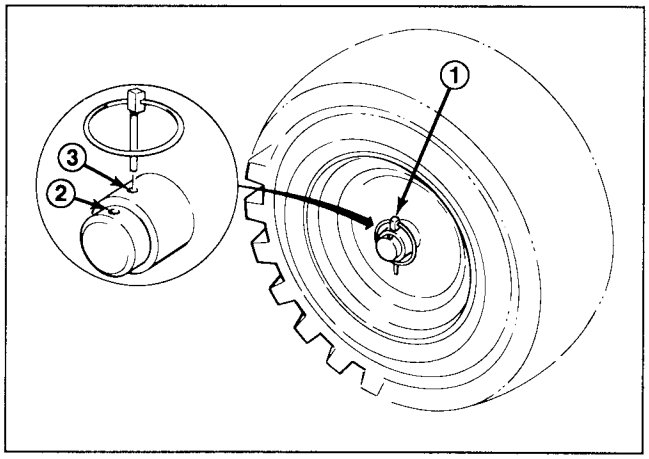

Figure 20

1. Axle pin
2. Outer axle hole
3. Inner axle hole and wheel hub

OPERATING INSTRUCTIONS

SNOWTHROWING TIPS

1. When snowthrower is not being used, close fuel shut-off valve, place wheel drive control in N—neutral—position, auger drive control in OFF (disengage) position, and remove key from the switch.

2. Remove snow as soon as possible after it falls. This produces best snow removal results.

3. Adjust skids to match the type of surface being cleaned; refer to Adjusting Skids, page 13.

4. The snowthrower is designed to clean snow down to the contact surface, but there are times when front of snowthrower may tend to ride up. If this happens, reduce forward speed by shifting into a lower gear. If front still tends to ride up, lift up on both handles to hold down front of snowthrower.

5. Discharge snow downwind whenever possible, and overlap each swath to ensure complete snow removal. If wheels slip, shift into a lower gear to reduce forward speed.

6. Run snowthrower for a few minutes after clearing snow so moving parts do not freeze. Engage impeller to clear any remaining snow from inside housing.

7. Do not overload snowthrower by clearing snow at too fast a rate. If engine slows down, shift to a lower gear to reduce forward speed.

8. Always use full throttle (maximum engine speed) when throwing snow.

9. In wet or slushy conditions, clogging of the discharge chute will be reduced by maintaining maximum engine speed and by not overloading the engine.

⚠ DANGER

- STAY BEHIND THE HANDLES AND AWAY FROM DISCHARGE OPENING WHILE OPERATING THE SNOWTHROWER. ROTATING IMPELLER OR AUGER CAN CUT OFF OR INJURE FINGERS OR HANDS. KEEP FACE, HANDS, FEET AND ANY OTHER PART OF YOUR BODY OR CLOTHING AWAY FROM CONCEALED, MOVING OR ROTATING PARTS.

- BEFORE ADJUSTING, CLEANING, REPAIRING AND INSPECTING THE SNOWTHROWER, AND BEFORE UNCLOGGING THE DISCHARGE CHUTE, SHUT ENGINE OFF AND WAIT FOR ALL MOVING PARTS TO STOP. ALSO, PULL WIRE OFF SPARK PLUG AND KEEP WIRE AWAY FROM THE PLUG TO PREVENT ACCIDENTAL STARTING. USE A STICK, NOT YOUR HANDS, TO REMOVE OBSTRUCTIONS FROM DISCHARGE CHUTE.

10. In some snow and cold weather conditions, some controls and moving parts may freeze. Therefore, when any control becomes hard to operate, stop the engine; then check all parts for freeze up. DO NOT USE EXCESSIVE FORCE AND TRY TO OPERATE THE CONTROLS WHEN FROZEN. Free all controls and moving parts before operating.

ADJUSTING SKIDS (Fig. 21)

FOR CONCRETE OR ASPHALT SURFACES

1. Move snowthrower to a level surface. Next, loosen (4) flange nuts securing both skids to the auger side plates. Skids must slide up and down.

2. Push snowthrower forward so pivoting scraper blade moves backward.

3. Adjust both skids so there is 1/8 of an inch between bottom of auger and level surface. When skids are adjusted correctly, tighten flange nuts. Next, check pivoting scraper blade that is mounted at bottom of auger housing. Scraper must be parallel with level surface. If scraper is not parallel, adjust skids again.

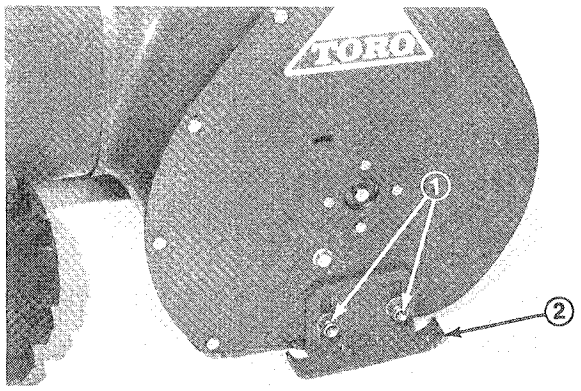

Figure 21

1. Flange nuts 2. Skid

FOR GRAVEL SURFACES

For gravel or crushed rock surfaces, adjust the skids to prevent picking up rocks.

Loosen the (4) flange nuts securing both skids to auger side plates. Next, slide skids down as far as possible so auger is as far from the level surface as skid adjustment allows; then tighten flange nuts.

MAINTENANCE

WARNING

To prevent accidental starting of the engine while performing maintenance, rotate ignition key to off and remove it from the switch. Next, pull wire off spark plug (Fig. 22) and make sure wire does not accidentally touch the plug.

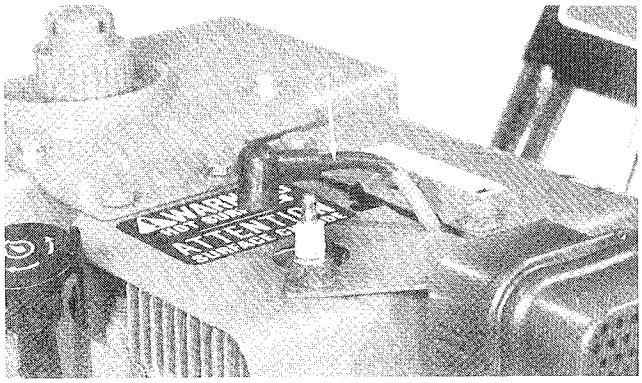

Figure 22

1. Spark plug wire

DRAINING GASOLINE

1. Close fuel shut-off valve located under fuel tank (Fig. 23).

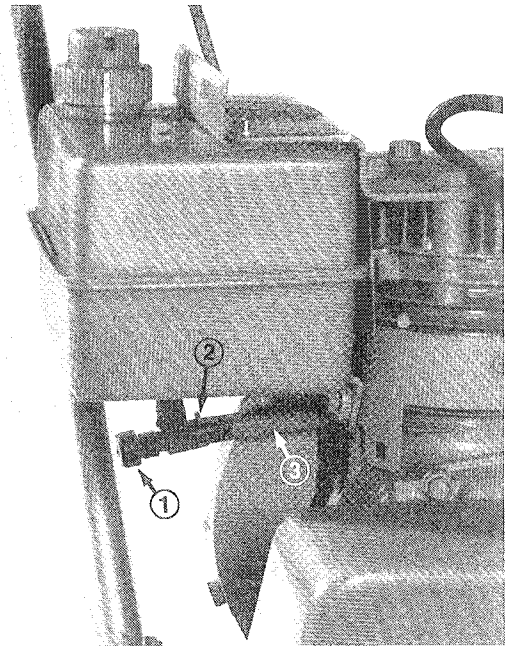

Figure 23

1. Fuel shut-off valve
2. Hose clamp
3. Fuel line

2. Place a clean drain pan under shut-off valve.

WARNING

Since gasoline is highly flammable, drain it outdoors and make sure engine is cool to prevent a potential fire hazard. Wipe up any gasoline that may have spilled. Do not drain gasoline near any open flame or where gasoline fumes may be ignited by a spark. DO NOT SMOKE a cigar, cigarette or pipe when handling gasoline.

3. Loosen hose clamps securing fuel line to valve and slide line off valve (Fig. 23).
4. Open valve allowing fuel to flow into drain pan.
5. Reinstall fuel line and secure with hose clamp.

LUBRICATING SNOWTHROWER

Lubricate moving parts of the snowthrower after every 15 hours of operation or annually.

1. Drain gasoline from fuel tank; refer to Draining Gasoline, page 14.
2. Tip snowthrower forward onto auger housing and block it so it cannot fall.
3. Remove (4) thread forming screws holding rear shield in place, and slide shield away from traction unit.
4. Lightly lubricate drive chains, sprocket bushing, nylon ring, hex shaft, and the other pivot points with light oil (Fig. 24).
5. Wipe up any excess oil and install rear shield with (4) thread forming screws.

IMPORTANT: Do not get oil on rubber wheel or friction drive plate because the wheel will slip and the rubber may deteriorate.

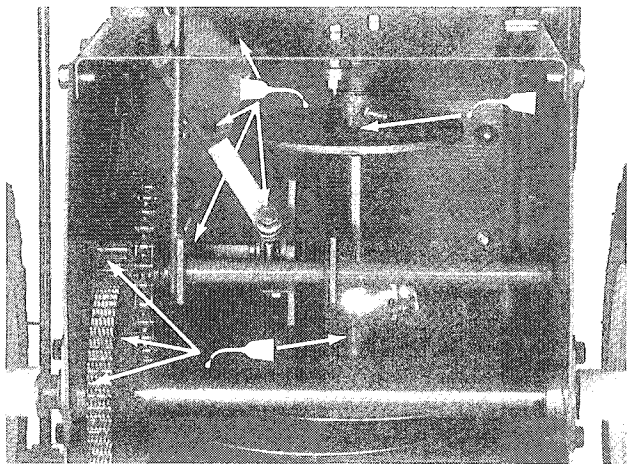

Figure 24

CHANGING CRANKCASE OIL

Initially, change oil after the first 2 hours of engine operation; thereafter, change oil after every 25 hours of engine operation or annually. If possible, run engine just before changing oil because warm oil flows better and carries more contaminants than cold oil.

1. Pull wire off spark plug and make sure wire does not contact plug accidentally.

2. Clean area around oil drain cap. Next, slide oil drain pan below drain extension; then remove oil drain cap (Fig. 25).

3. After all oil is drained, reinstall oil drain cap securely.

4. Position snowthrower on a level surface. Next, fill crankcase with oil: see Fill Crankcase With Oil, page 8. Wipe up any oil that may have spilled.

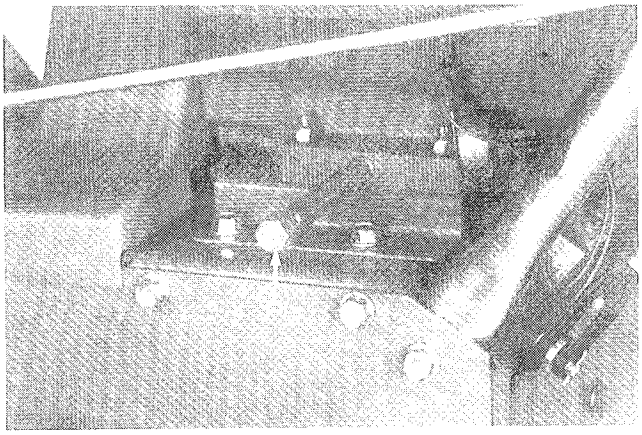

Figure 25

1. Drain cap

AUGER GEAR BOX

The auger gear box is filled with grease at the factory so regular maintenance is not required.

ADJUSTING TRACTION DRIVE LINKAGE

If snowthrower drives in forward speeds but not in reverse or vice versa, or if snowthrower does not disengage—come out of gear—an adjustment is required.

1. Move wheel drive control lever into No. 1, 1st gear (Fig. 26).

2. Inspect location of control lever in slot. Control lever must be 1/4 inch from front of slot (Fig. 26).

IMPORTANT: Lever position in slot will vary due to free play in control lever linkage. Be sure to check 1/4 inch dimension with lever at rearmost point of free play.

3. If wheel drive control lever is not 1/4 inch from front of slot, adjust long control rod. Refer to steps 1-5 of Install Wheel Drive Control Rods, page 6.

4. If control lever is adjusted correctly and problem persists, contact your local Authorized Toro Service Dealer.

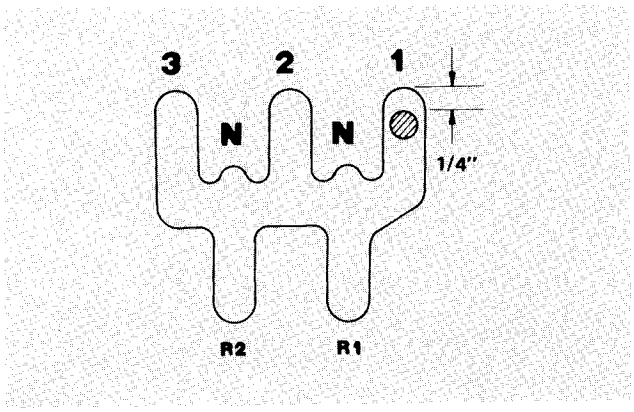

Figure 26

REPLACING AND ADJUSTING TRACTION DRIVE BELT (Fig. 27)

When traction drive belt becomes worn, stretched, oil-soaked or otherwise defective, belt replacement is required. **USE ONLY GENUINE TORO REPLACEMENT PARTS.**

1. Pull wire off spark plug (Fig. 22) and make sure it does not contact the plug accidentally.

2. Remove two screws holding belt cover in place, and set cover aside.

3. Move auger drive control to OFF (disengage) and wheel drive control to N (neutral). Next, remove auger belt from engine pulley and large auger pulley.

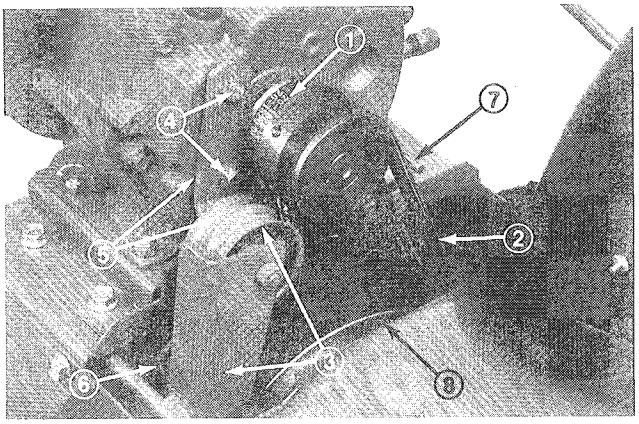

Figure 27

1. Traction belt
2. Auger belt
3. Auger idler arm
4. Capscrews
5. Traction idler arm
6. Large traction pulley
7. Belt guide
8. Large auger pulley

4. Loosen two capscrews securing traction idler arm to front of engine. Next, remove traction belt from engine pulley and large traction pulley.

5. Install new traction belt around large traction pulley. Next, loop belt over engine pulley, making sure that belt is on inside of traction idler arm and belt guide.

6. Slide traction idler arm against belt to remove belt slack and tighten capscrews.

Note: Tension belt only enough to remove slack. Do not over-tension.

7. Install auger belt around large auger pulley. Next, loop belt over engine pulley, making sure that belt is on inside of auger idler arm and belt guide.

8. Reinstall belt cover with two screws.

9. Reinstall wire on spark plug and test operate unit to check traction. If little traction is evident, proceed to step 10. If traction operation is satisfactory, proceed to operate machine.

10. Remove wire from spark plug and remove belt cover. Loosen two capscrews securing traction idler arm and slide arm further against belt. Move arm a minimal amount to ensure belt is not over-tensioned.

11. Repeat steps 8 and 9.

REPLACING AUGER/IMPELLER DRIVE BELT (Fig. 28)

When auger/impeller drive belt becomes worn, stretched, oil-soaked or otherwise defective, belt replacement is required. **USE ONLY GENUINE TORO REPLACEMENT PARTS.**

1. Pull wire off spark plug (Fig. 22) and make sure it does not contact the plug accidentally.

2. Remove two screws holding belt cover in place and set cover aside.

3. Move auger drive control to OFF (disengage) and wheel drive control to N (neutral). Next, remove auger belt from engine pulley and large auger pulley.

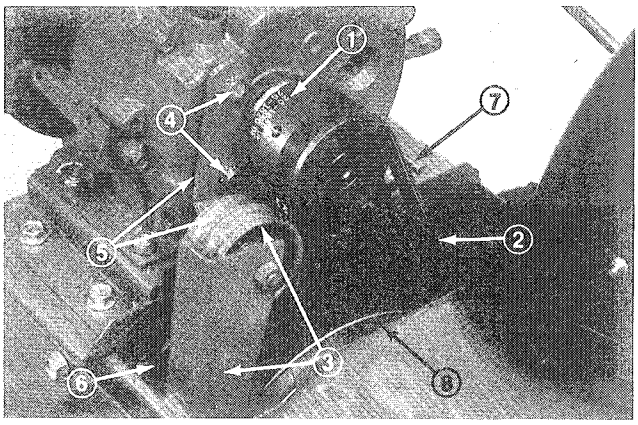

Figure 28

1. Traction belt
2. Auger belt
3. Auger idler arm
4. Capscrews
5. Traction idler arm
6. Large traction pulley
7. Belt guide
8. Large auger pulley

4. Install new auger belt around large auger pulley. Next, loop belt over engine pulley, making sure that belt is on inside of auger idler arm and belt guide.

5. Reinstall belt cover with two screws.

ADJUSTING AUGER/IMPELLER DRIVE BELT

If auger/impeller belt slips, resulting in decreased snowthrowing performance, either an adjustment or a new belt is required.

DANGER

- **IMPROPER ADJUSTMENT MAY CAUSE INJURY IF AUGER/IMPELLER TURNS WHEN DISENGAGED.**
- **ROTATING IMPELLER OR AUGER CAN CUT OFF OR INJURE FINGERS OR HANDS.**
- **KEEP FACE, HANDS, FEET AND ANY OTHER PART OF YOUR BODY OR CLOTHING AWAY FROM CONCEALED, MOVING OR ROTATING PARTS.**
- **MAKE CERTAIN THAT AUGER DRIVE CONTROL ADJUSTMENT IS MAINTAINED.**

1. Move auger drive control backwards to OFF (disengage) (Fig. 29). **BACK EDGE OF AUGER DRIVE CONTROL MUST BE 1/8 INCH FROM REAR OF SLOT.**

2. If auger drive control is not 1/8 inch from rear of slot, adjust control rod. Refer to Install Auger Drive Control Rod, page 5.

3. Check tension of belt by operating the auger. **If belt still slips, replace the belt. USE ONLY GENUINE TORO REPLACEMENT PARTS.**

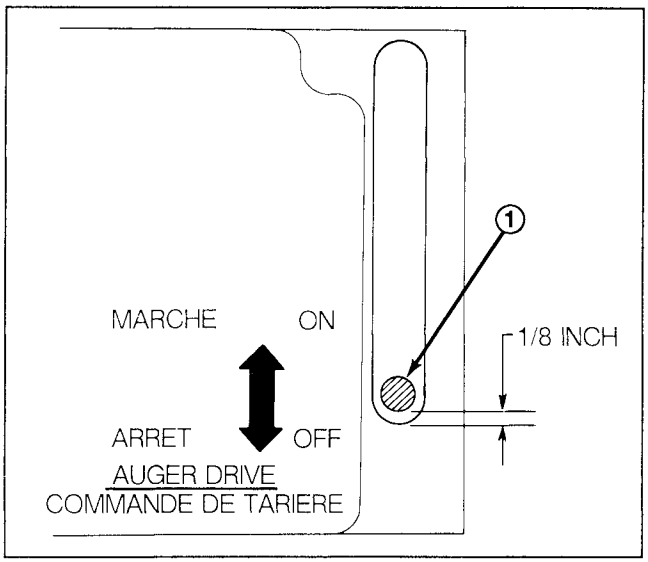

Figure 29

1. Auger drive control

MAINTENANCE

ADJUSTING CARBURETOR

The carburetor has been adjusted at the factory, but an occasional adjustment may be required.

1. Remove carburetor heater box: see To Start Engine, paragraph one, steps A & B, page 11.

Note: Skip steps 2 and 3 if the engine will start and run.

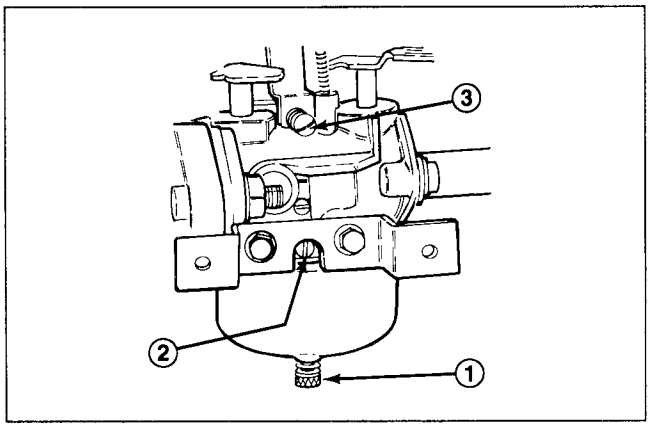

Figure 30

1. Power adjusting screw
2. Idle mixture screw
3. Idle speed screw

IMPORTANT: Do not close power adjusting screw too tight because the screw and seat will likely be damaged.

2. Power Adjusting Screw (Fig. 30)—Close screw by gently rotating it clockwise until a slight seating resistance is felt. Next, rotate power adjusting screw 1 full turn—360°—counterclockwise.

IMPORTANT: Do not close idle mixture screw too tight because the screw and seat will likely be damaged.

3. Idle Mixture Screw (Fig. 30)—Close screw by gently rotating it clockwise until a slight seating resistance is felt. Next, rotate idle mixture screw 1-1/2 full turns counterclockwise.

4. Start engine and let it warm up for approximately 3 to 5 minutes; then move throttle to FAST.

⚠ WARNING

Engine must be running so final adjustment of the carburetor can be performed. To guard against possible personal injury, move auger drive and wheel drive controls to DISENGAGE, and remember to keep hands, feet, face, and other parts of the body away from muffler, auger, discharge chute, and any moving part(s).

⚠ WARNING

Engines produce carbon monoxide which is an odorless, deadly poison. Do not run engine indoors or in an enclosed area.

5. Rotate power adjusting screw (Fig. 30) clockwise—in—1/8 turn at a time until engine misses because of a lean gasoline mixture. Then rotate screw counterclockwise—out—1/8 turn at time until engine runs unevenly because of a rich gasoline mixture. Next, rotate power adjusting screw clockwise, back to the midpoint between the rich and lean setting, so engine runs smoothly.

Note: Wait several seconds between each 1/8 turn setting so engine can adjust to the new fuel mixture.

6. Move throttle backward to idle speed. Next, rotate idle speed screw until engine idles fast—1750 rpm.

7. Rotate idle mixture screw (Fig. 30) clockwise—in—1/8 turn at a time until engine begins to miss because of a lean mixture. Then rotate screw counterclockwise—out—1/8 turn at a time until engine runs unevenly because of rich mixture. Next, rotate idle mixture screw clockwise, back to the mid-point between rich and lean settings.

Note: Wait several seconds between each 1/8 turn setting so engine can adjust to the new fuel mixture.

8. Again, rotate idle speed screw (Fig. 30) until engine idles at 1750 rpm.

9. Check carburetor adjustment by quickly moving throttle from low speed to high speed. Engine should accelerate without hesitation or sputtering. If engine does not accelerate properly, adjust carburetor to a slightly richer mixture. Also, if engine falters under load, open power adjusting screw 1/8 turn counterclockwise.

10. After carburetor is adjusted, shut engine off before replacing carburetor heater box.

REPLACING SPARK PLUG

Use a Champion RJ-19LM spark plug or equivalent. Set air gap at 0.030" (0.76 mm). Since air gap between center and side electrodes of the spark plug increases gradually during normal engine operation, install a new plug after every 25 hours of engine operation.

1. Clean area around spark plug so foreign matter cannot fall into cylinder when plug is removed.

2. Pull wire off spark plug (Fig. 31) and remove plug from cylinder head.

MAINTENANCE

IMPORTANT: A cracked, fouled or dirty spark plug must be replaced. Do not sand blast, scrape or clean electrodes because grit may eventually release from the plug and fall into the cylinder. The result will likely be engine damage.

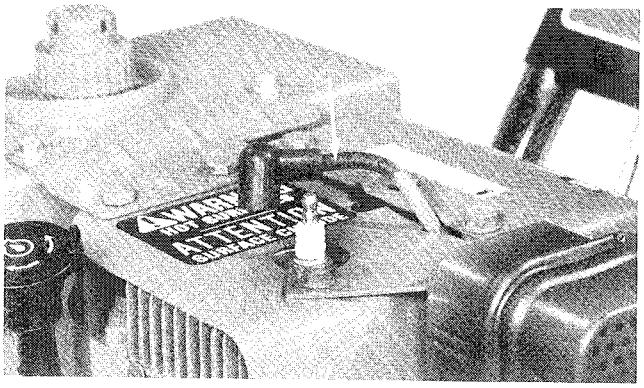

Figure 31

1. Spark plug wire

3. Set air gap between electrodes of new spark plug at 0.030" (0.76 mm) (Fig. 32). Next, install spark plug in cylinder head. Tighten plug to 15 ft-lb (20.4 N·m).

4. Push the wire onto the spark plug (Fig. 31).

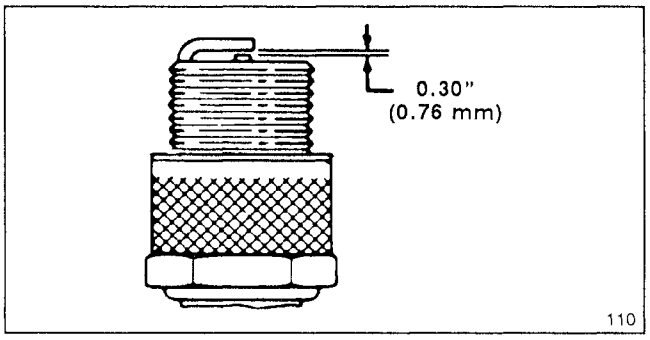

Figure 32

PREPARING SNOWTHROWER FOR STORAGE

1. For long term storage, either drain gasoline from fuel tank or use a fuel additive before storing. To drain gasoline, refer to Draining Gasoline, page 14. After fuel is drained, start engine and let it idle until all fuel is consumed and engine stops. Repeat the starting procedure two more times to ensure all gas is removed from the engine. If gasoline is not drained, gum-like varnish deposits will form and cause poor engine operation and starting problems.

Fuel can be left in gas tank only if a fuel additive, such as Toro's Stabilizer/Conditioner, is added to gasoline and run through engine before storing. Toro's Stabilizer/Conditioner is a petroleum distillate based conditioner/stabilizer. Toro does not recommend stabilizers with an alcohol base, such as ethanol, methanol or isopropyl. Use fuel additive in recommended quantities as specified on container.

Under normal conditions, fuel additives remain effective in fuel for 6-8 months.

2. Remove spark plug from cylinder head. Next, pour two teaspoons of engine oil into spark plug hole in cylinder head. Install spark plug in cylinder head, but do not install wire on the plug. Then pull recoil starter slowly to distribute oil on inside of cylinder.

3. Lubricate the snowthrower: refer to Lubricating Snowthrower, page 14. Change crankcase oil: see Changing Crankcase Oil, page 14.

4. Clean the snowthrower. Touch up chipped surfaces with paint. Toro Re-Kote paint is available from an Authorized TORO Service Dealer. Sand affected areas before painting, and use a rust preventative to prevent metal parts from rusting.

5. Tighten all screws and nuts. If any part is damaged, repair or replace it.

6. Store snowthrower in a clean, dry place, and cover it for protection.

IDENTIFICATION AND ORDERING

MODEL AND SERIAL NUMBER

The snowthrower has two identification numbers: a model number and a serial number. The two numbers are stamped on a decal which is located on back of engine mounting plate. In any correspondence concerning the snowthrower, supply model and serial numbers to ensure that correct information and replacement parts are obtained.

To order replacement parts from an Authorized TORO Service Dealer, supply the following information:

1. Model and serial numbers of the snowthrower.

2. Part number, description, and quantity of part(s) desired.

Note: Do not order by reference number if a parts catalog is being used; use the PART NUMBER.

MAINTENANCE RECORD

Date	Hours Used	Oil Change	Lubrication	Summer Storage	Fall Service	Spark Plug Gap

The Toro Promise

A Two Year Limited Warranty
On All
Gasoline Powered Consumer Products

The Toro Company promises to repair these TORO Products if defective in materials or workmanship. The following time periods from the date of purchase apply:

Residential Product	2 Years
Residential Products Used Commercially . . .	45 Days

The costs of parts and labor are included, but the customer pays the transportation costs. Just return any residential product to an Authorized TORO Service Dealer or TORO Distributor.

Should you feel your TORO is defective and wish to rely on The Toro Promise, the following procedure is recommended:

1. Contact any Authorized TORO Service Dealer, TORO Master Service Dealer, or TORO Distributor (the Yellow Pages of your telephone directory is a good reference source).
2. He will either instruct you to return the product to him or recommend another Authorized TORO Service outlet which might be more convenient.
3. Bring the product along with your original sales slip, or other evidence of purchase date, to the service dealer.
4. The servicing dealer will inspect the unit, advise you whether the product is defective and, if so, make all repairs necessary to correct the defect without extra charge to you.

If for any reason you are dissatisfied with the dealer's analysis of the defect or the service performed, you may contact us.

Write:

TORO Customer Service Department
8111 Lyndale Avenue South
Minneapolis, Minnesota 55420

The above remedy of product defects through repair by an Authorized TORO Service Dealer is the purchaser's sole remedy for any defect.

THERE IS NO OTHER EXPRESS WARRANTY. ALL IMPLIED WARRANTIES OF MERCHANTABILITY AND FITNESS FOR USE ARE LIMITED TO THE DURATION OF THE EXPRESS WARRANTY.

Some states do not allow limitations on how long implied warranty lasts, so the above limitation may not apply to you.

This Warranty applies only to parts or components which are defective and does not cover repairs necessary due to normal wear, misuse, accidents, or lack of proper maintenance. Regular, routine maintenance of the unit to keep it in proper operating condition is the responsibility of the owner.

All warranty repairs reimbursable under The Toro Promise must be performed by an Authorized TORO Service Dealer using Toro approved replacement parts.

Repairs or attempted repairs by anyone other than an Authorized TORO Service Account are not reimbursable under The Toro Promise. In addition, these unauthorized repair attempts may result in additional malfunctions, the correction of which is not covered by warranty.

The Toro Company is not liable for indirect, incidental or consequential damages in connection with the use of the product including any cost or expense of providing substitute equipment or service during periods of malfunction or non-use.

Some states do not allow the exclusion of incidental or consequential damages, so the above exclusion may not apply to you.

This warranty gives you specific legal rights, and you may also have other rights which vary from state to state.

COUNTRIES OTHER THAN THE UNITED STATES OR CANADA

Customers who have purchased TORO products exported from the United States or Canada should contact their TORO Distributor (Dealer) to obtain guarantee policies for your country, province or state. If for any reason you are dissatisfied with your Distributor's service or have difficulty obtaining guarantee information, contact the TORO importer. If all other remedies fail, you may contact us at The Toro Company.

Compliance with Radio Interference Regulations Certified.
Certifie Conforme au Reglement sur le Brouillage Radioelectrique.

Litho in U.S.A.