FORM NO. 3314-555

TORO®

MODEL NO. 59169

INSTALLATION INSTRUCTIONS

RECYCLER® KIT

FOR 8-25 REAR ENGINE RIDER

Since this instruction sheet covers only a small portion of the information necessary to maintain and operate your rider, we suggest that you keep this material with your Operator's Manual so that both may be referred to for instructions concerning safe operation and proper maintenance procedures.

NOTE: It is recommend that this kit be installed by an Authorized Toro Service Dealer to ensure the best performance.

ASSEMBLY INSTRUCTIONS

NOTE: Make sure engine is shut off and wire is removed from spark plug. **Remove the cutting deck and all bagging attachments from rider as instructed in operator's manual.**

REMOVE OLD BLADE

1. Use a rag or thickly padded glove to hold old blade. Depending on your unit's blade assembly, remove lock nut, anti-scalp cup, and blade (Fig. 1) or blade bolt, washer, and blade (Fig. 2). Save the old blade for future use if Recycler® Kit is removed.

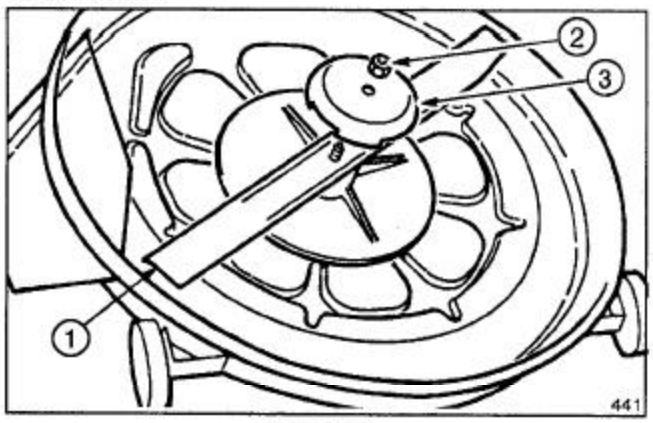

Figure 1

1. Blade 2. Lock nut 3. Anti-scalp cup

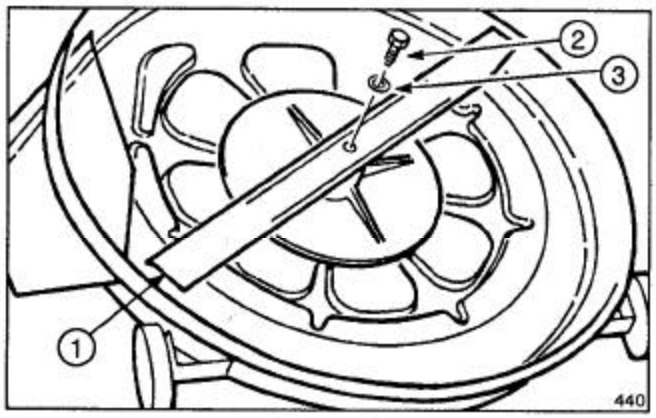

Figure 2

1. Blade 2. Blade bolt 3. Washer

NOTE: Since blade fasteners are tightened at the factory, it may be difficult to remove them. If the blade bolt or nut cannot be removed, contact an Authorized TORO Service Dealer for assistance.

REMOVE DECK BAFFLE (Fig. 3)

1. Remove capscrew, washer and lock nut securing rear of baffle to underside of mower housing.

2. Loosen grass deflector pivot post lock nut securing front of baffle to underside of mower housing. Remove baffle; retain for future use if Recycler® Kit is removed. Retighten pivot post lock nut securely. DO NOT REMOVE DEFLECTOR FROM MOWER HOUSING.

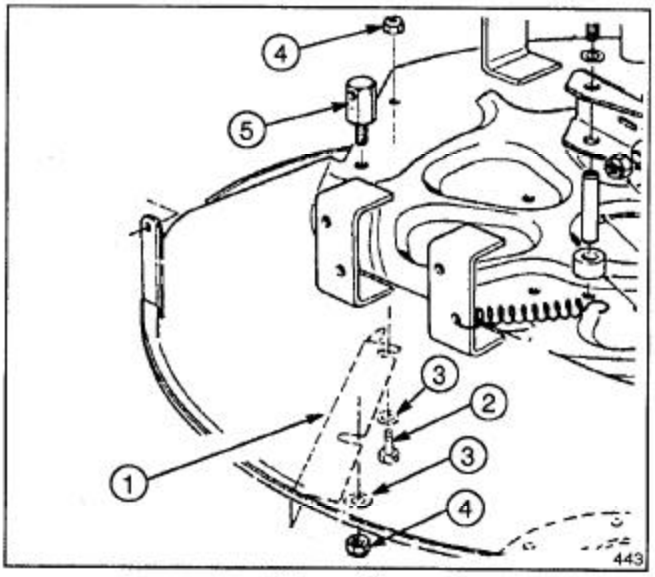

Figure 3

1. Baffle
2. Capscrew
3. Washer
4. Lock nut
5. Pivot post

3. Reinstall the capscrew, washer and lock nut.

© The TORO Company - 1991

ASSEMBLY INSTRUCTIONS

INSTALL DECK RING

Two of the eight deck ring holes are already in rim of the deck. The four deck ring pieces are identical. Use the deck ring pieces as templates for marking and drilling the remaining deck ring holes. When fastening deck ring pieces to rim, make sure all capscrew heads are positioned downward.

1. Align holes in two deck ring pieces with hole in front center of deck rim (Fig. 4). Loosely fasten ring pieces to rim with a capscrew and lock nut (Fig. 5). Then attach remaining two deck ring pieces to rear center hole in rim (Fig. 4). Do not tighten lock nuts securely; deck ring pieces should be loose enough to rotate around capscrews.

2. Using the deck ring pieces as templates, mark and punch six holes in rim.

3. After holes are marked, rotate deck ring pieces out of the way (Fig. 4) and drill six 5/16" (.312) dia. holes in rim of deck.

4. Rotate deck ring pieces back into position, fasten to deck using remaining (6) capscrews and lock nuts (Fig. 5).

5. Tighten (8) lock nuts securely.

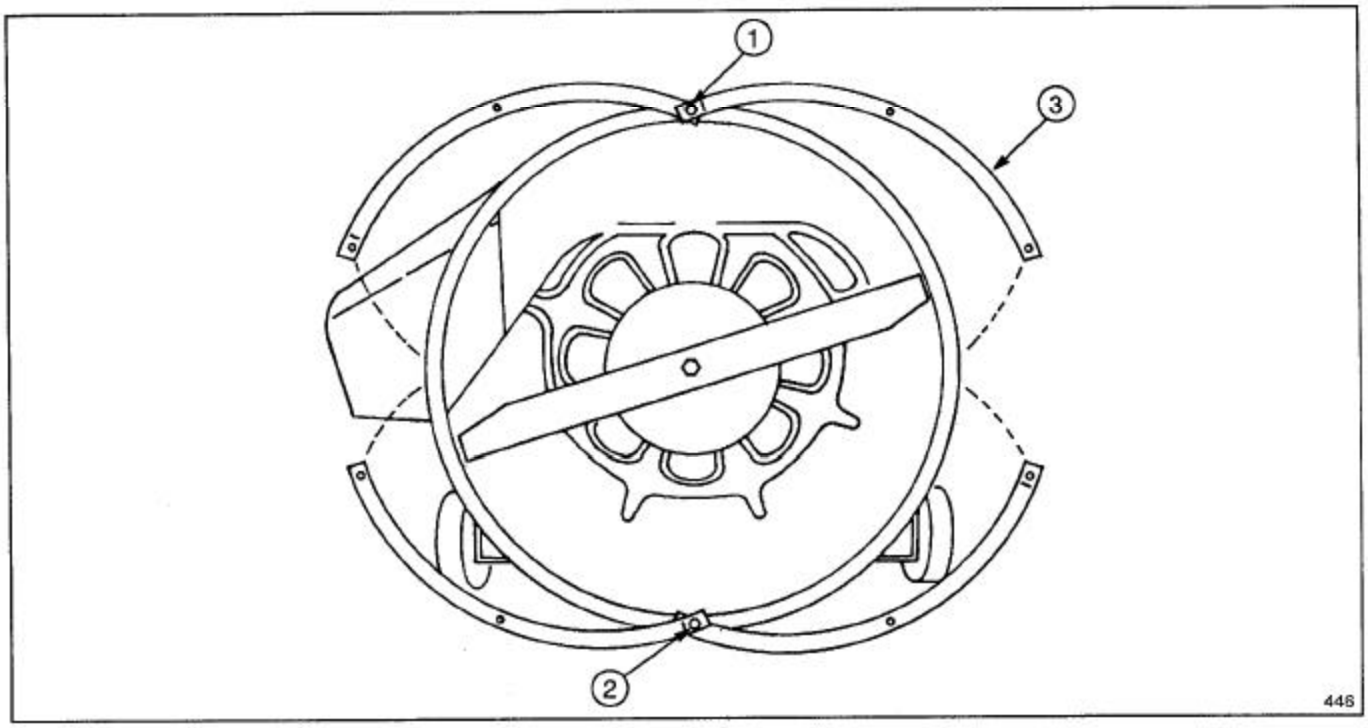

Figure 4

1. Front center hole 2. Rear center hole 3. Deck ring piece

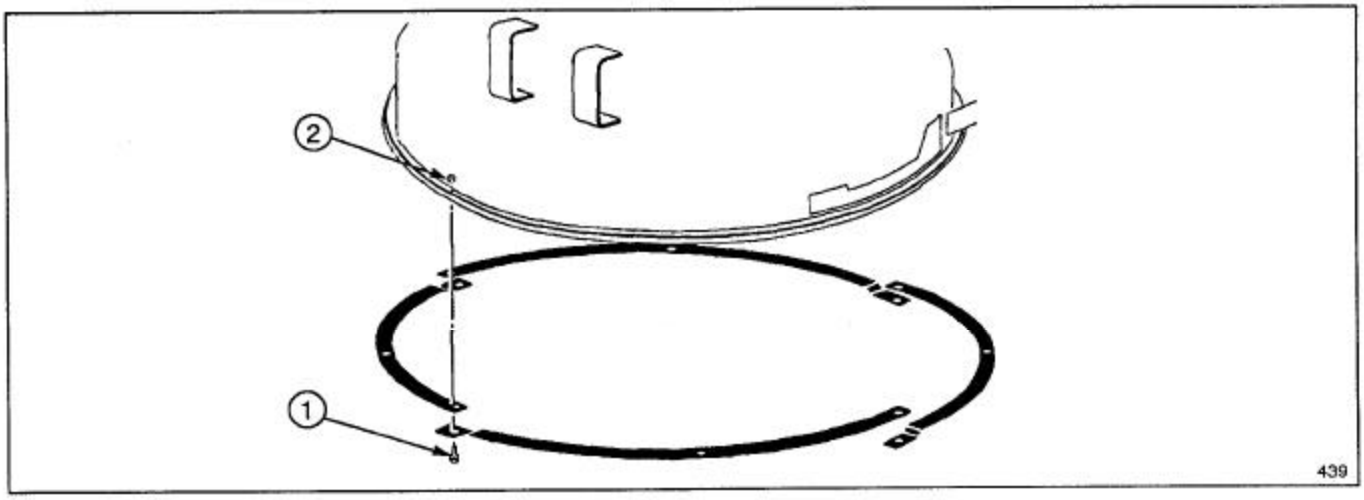

Figure 5

1. Capscrew 2. Lock nut

ASSEMBLY INSTRUCTIONS

MARK AND DRILL HOLES FOR KICKER INSTALLATION (Fig. 6)

Holes for the kickers will need to be marked and drilled. Use the kickers as templates for marking holes. All of the kickers are identical so it does not matter which one is used as a template. Install the kickers in a clockwise direction around the deck.

Make sure underside of mower deck is clean before marking holes or installing kickers. If the underside of the deck is dirty, it will be difficult to see marks.

When marking holes, hold kicker firmly against mower deck.

IMPORTANT: POSITION KICKERS CAREFULLY SO THAT HOLES WILL NOT BE DRILLED THROUGH BRACKETS ON TOP OF DECK.

1. Position first kicker on underside of mower deck with highest point of kicker directly aligned with hole for mounting deck ring as shown in Figure 6.

2. Mark hole locations and remove kicker.

3. Line up the second kicker in a position roughly similar to that shown in Figure 6, making sure the kicker is firmly lined up with the deck wall. To precisely locate the second kicker, measure the distance from the left hole of the first kicker to the right hole of the second kicker. The distance should be 6-7/16".

4. Mark hole locations and remove kicker.

5. Line up the third kicker in a position roughly similar to that shown in Figure 6, making sure the kicker is firmly lined up with the deck wall. To precisely locate the third kicker, measure the distance from the left hole of the second kicker to the right hole of the third kicker. The distance should be 6-1/4". Mark hole locations.

6. Position fourth kicker on underside of mower deck with highest point of kicker directly aligned with hole for mounting deck ring as shown in Figure 6. Mark hole locations.

IMPORTANT: <u>BE CAREFUL NOT TO DRILL HOLES THROUGH BRACKETS ON TOP OF DECK.</u> DO NOT DRILL THROUGH HOLES IN KICKERS AS KICKER DAMAGE MAY OCCUR.

7. Using a sharp drill bit, drill 13/64" (.203) dia. holes in deck. Drill must be sharp to prevent it from walking.

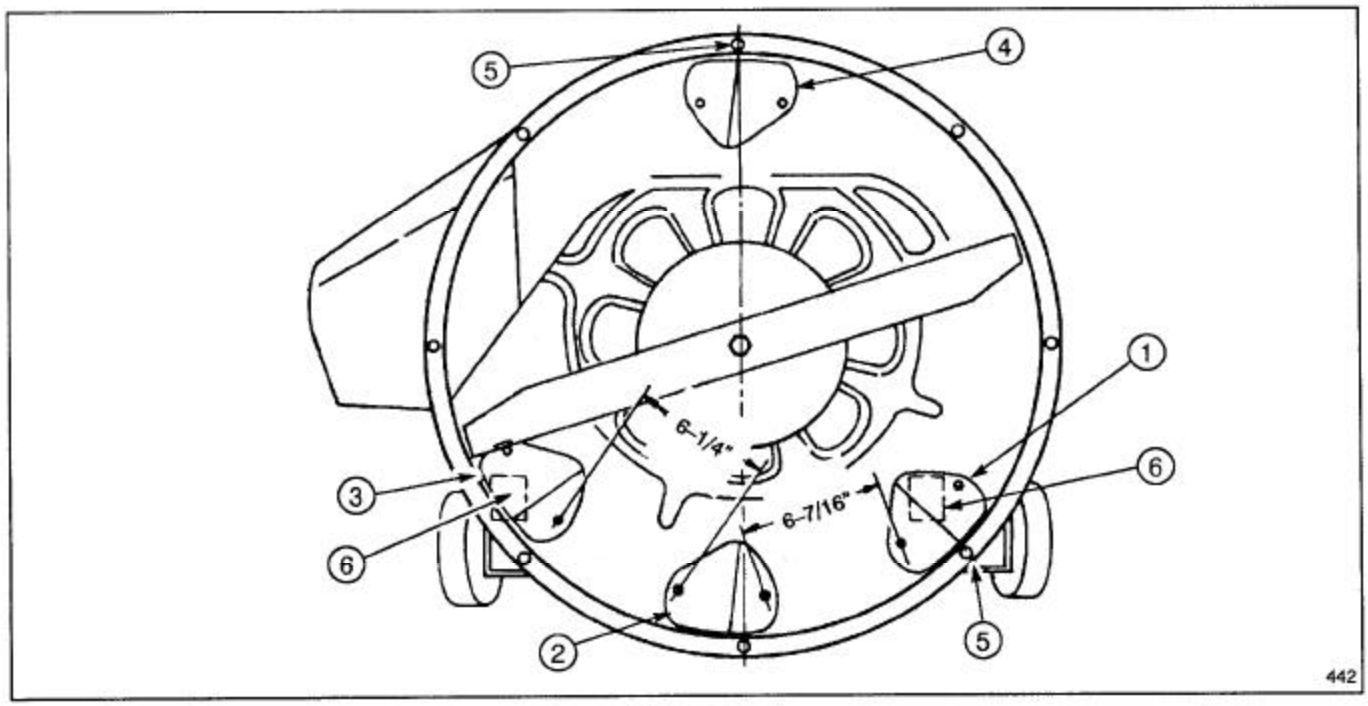

Figure 6

1. First kicker
2. Second kicker
3. Third kicker
4. Fourth kicker
5. Holes for mounting deck ring
6. Brackets on top of deck

ASSEMBLY INSTRUCTIONS

INSTALL KICKERS

The four plastic kickers are identical. All of the kicker self-tapping screws are the same length.

1. Position the kickers as shown in Figure 6, aligning holes in kickers with holes in deck.

2. Insert self-tapping screws from top of deck and fasten kickers securely in place.

INSTALL NEW BLADE

1. Depending on your unit, install in sequence the new blade, anti-scalp cup (if one was on unit), and lock nut (Fig. 7) or the new blade, washer and blade bolt (Fig. 8). Tighten blade bolt or lock nut to 50 ft-lbs.

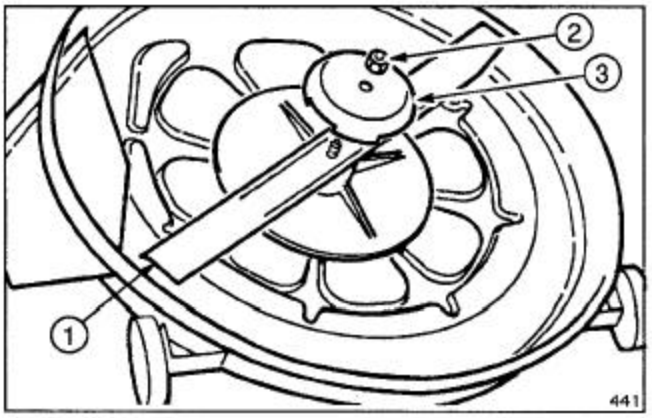

Figure 7

1. Blade **2. Lock nut** **3. Anti-scalp cup**

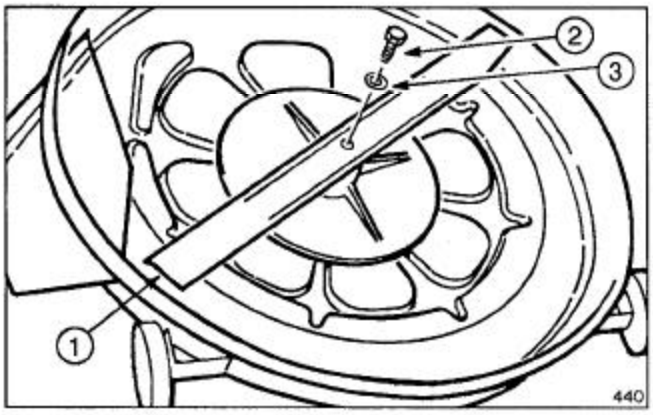

Figure 8

1. Blade **2. Blade bolt** **3. Washer**

INSTALL DISCHARGE COVER (Fig. 9)

1. Lift grass deflector. Position plastic discharge cover over discharge opening so that bolt goes through hole in discharge cover.

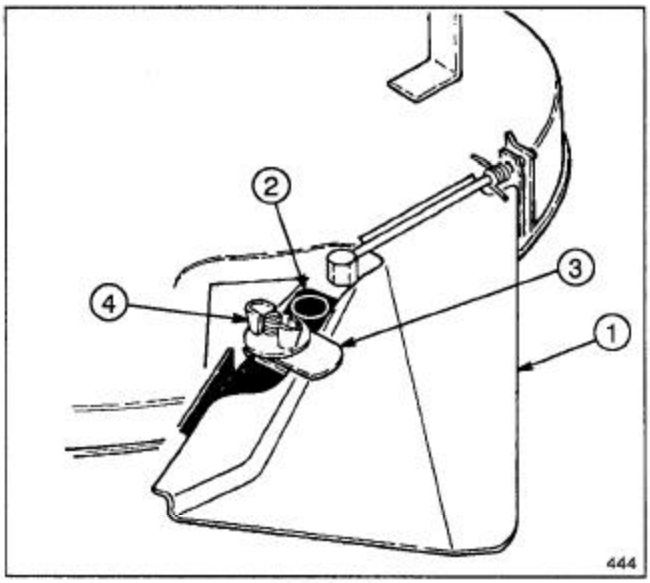

Figure 9

1. Grass deflector **3. Metal tab**
2. Plastic discharge cover **4. Wing nut**

2. Place metal tab on bolt.

3. Lower grass deflector and make sure edge of deflector is secured under metal tab.

4. Secure grass deflector, metal tab and discharge cover to deck securely with wing nut.

Note: If the discharge cover is removed for side discharge or bagging of clippings, the wing nut and metal tab must be saved for future mounting of discharge cover.

INSTALL DECAL

1. Thoroughly clean left side of deck with a soap and water solution.

NOTE: Deck must be dry before installing decal.

2. Install decal (Fig. 10).

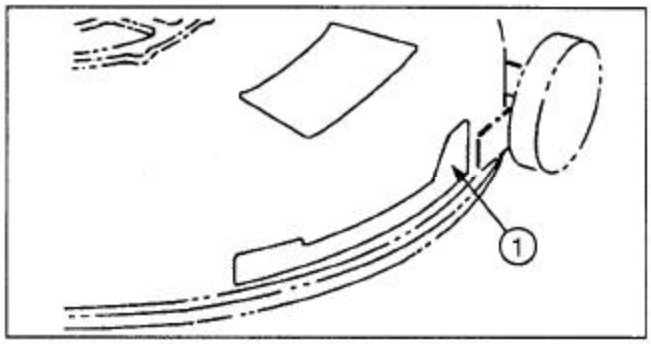

Figure 10

1. Decal

OPERATING INSTRUCTIONS

TIPS FOR CUTTING GRASS

Follow these instructions for the best cutting results and lawn appearance:

- Always use FAST (full) throttle when mowing.

- Maintain a **sharp blade** throughout the cutting season. A sharp blade cuts cleanly and without tearing or shredding the grass blades like a dull blade. Tearing and shredding causes the grass to turn brown at the edges which impairs growth and increases susceptibility to diseases. About every 30 days, remove the wire from the spark plug and check the cutter blade for sharpness. File down any nicks on blade to restore its sharp edge.

- Clean any residue from the underside of the mower housing and kickers after each use. If residue is allowed to build up in mower housing and on kickers, cutting performance may be unsatisfactory.

- Very long or extremely wet grass can be cut, but specific operating techniques must be used. Start by setting height-of-cut in the highest position. Using 1st gear and maximum throttle speed, move into the grass and cut a swath that is only half as wide as the mower housing. If side discharging, direct grass clippings toward area that was cut previously. Stop forward movement occasionally to allow discharge area to clear itself. Cutting too much grass may clog the mower housing and discharge area. If mower housing does clog, shut engine off, disengage blade and remove the obstruction with a stick.

DANGER

Before removing any obstruction from mower housing, move blade control into DISENGAGE detent, depress clutch and brake pedals, shift into neutral and turn ignition key to OFF position. Remove wire from spark plug to prevent the possibility of accidental starting.

- When the rider is used to cut a lawn for the first time, cut grass slightly longer than normal to ensure that cutting height of mower housing will not cause scalping, which could result from severe undulations of the ground. In general, however, the cutting height used in the past is probably the best one to use. When cutting grass over six inches tall, you may want to cut the lawn twice to hide clippings down in the grass.

- If the grass is ever allowed to grow slightly longer than normal, or if it contains a high degree of moisture, raise cutting height higher than usual and cut the grass at this setting. Next, cut the grass again using the lower, normal setting. This method of cutting long grass results in an even distribution of clippings and an acceptable quality-of-cut.

- In the heat of the summer, it is best to cut only about 1/3 of the grass blade. Cutting below the 3rd setting is not recommended unless grass is sparse or it is late fall when grass growth begins to slow down.

- If the cutting width of the rider is wider than the mower previously used, raise height-of-cut setting one notch to ensure undulations in turf are not cut too short.

- MOWING IN EXTREME CONDITIONS—Air is required to cut and recut grass clippings in mower housing, so do not set height-of-cut too low or totally surround housing by uncut grass. Always try to have one side of the mower housing free from uncut grass, allowing air to be drawn into housing. When making an initial cut thru center of uncut area, operate rider at a slower speed and back up if rider starts to clog.

- STOPPING RIDER—If forward motion of rider has to be stopped while cutting, a clump of grass clippings may be deposited on lawn. Follow this procedure for stopping while cutting:

A. With blade engaged, move onto a previously cut area.

B. Raise deck one or two height-of-cut settings while driving rider forward and deck is in operation.

C. Depress clutch and brake pedals, move throttle control lever to SLOW position, disengage mower and rotate ignition key to OFF.

- MOW AT PROPER INTERVALS—Under most normal conditions you'll need to mow approximately every 4–5 days. But remember, grass grows at different rates at different times. This means that in order to maintain the same height-of-cut, which is a good practice, you'll need to cut more frequently in early spring; as the grass growth rate slows in mid summer, cut only every 8–10 days. If you are unable to mow for an extended period due to weather conditions or other reasons, mow first with the height-of-cut at a high level; then mow again 2–3 days later with a lower height setting.

- Alternate mowing direction. This helps disperse clippings over lawn for even fertilization.

OPERATING INSTRUCTIONS

• SIDE DISCHARGING OR BAGGING—To side discharge or use bagging attachment, remove the wingnut securing the plastic discharge cover to the grass deflector. NEVER REMOVE THE GRASS DEFLECTOR FROM THE MOWER HOUSING. If the complete kit is removed, reinstall the deck baffle (Fig. 3).

WARNING

Never remove the grass deflector (Fig. 9) from the mower housing. If the discharge cover under the grass deflector is removed in order to side discharge or bag, the grass deflector routes discharged material down toward the turf. If the deflector is ever damaged, replace it. Without the deflector or complete grass catcher assembly mounted in place, discharged material could cause personal injury or blade contact could occur.

The Recycler® Kit's special features reduce clipping size, thus decreasing amount of grass to be disposed of and number of times bagger will have to be emptied.

Note: When bagger is full, mower will begin to inject clippings down into the grass.

If the lawn appearance is not satisfactory after mowing, try one of the following:

- Sharpen the blade.
- Raise the height-of-cut setting on your mower.
- Cut your grass more frequently.
- Overlap cutting swaths instead of cutting a full swath with each pass.
- Mow across the marginal areas a second time.

TIPS FOR CUTTING LEAVES

In the fall, you can cut your leaves up into finely cut particles and inject the particles down into the grass. When spring arrives, the leaf particles will have decomposed and restored valuable nutrients to the soil.

- When cutting is complete, always be sure that 50% of the lawn shows through the finely cut leaf cover. This may require one or more passes over the leaves.
- If there are more than five inches of leaves on lawn, raise the deck one or two notches higher. This makes it easier to feed leaves under mower deck.
- If leaves are not cut up finely enough to be hidden down in the grass, make a second pass 90° to the first pass.
- If you cut up a lot of oak leaves, you might want to add lime to your grass in the spring. Lime reduces the acidity of oak leaves.


TORO®