Form No. 3371-927 Rev B

TORO®

Count on it.

Parts Catalog

GrandStand® Mower

With 102cm TURBO FORCE® Cutting Unit

Model No. 74536TE—Serial No. 312000001 and Up

Register at www.Toro.com.
Original Instructions (EN)

CE

3371-927 B

Ordering Replacement Parts

To order replacement parts, please supply the part number, the quantity, and the description of each part desired.

Understanding Reference Numbers

Each identified part in an illustration has a reference number. The reference number for a part also appears in the parts list, along with other information about the part.

This catalog uses two special reference number formats, one to indicate parts in a service assembly and another to indicate the quantity of a given part in an illustration.

Service Assembly Reference Numbers

Parts in service assemblies have reference numbers in the form a:b. The a represents the reference number of the entire service assembly and the b represents a sequential number unique to each part within the service assembly.

For example, a wheel assembly might be identified by reference number 6, the tire by 6:1, the valve by 6:2, and the wheel by 6:3. When you order the assembly identified by reference number 6, you receive all parts identified by reference numbers 6:1,6:2, and 6:3. However, you may also order any part individually. Reference numbers of this type appear in illustration and in parts lists.

Reference Numbers Indicating Quantity

In an illustration, if a reference number indicates more than one part, the reference number has the form nX y. The n represents the quantity of the part, the X is the multiplication symbol, and the y represents the reference number.

For example, in an illustration, the reference number 2X 37 means that two of the parts identified by reference number 37 are indicated.

List of Abbreviations

AR: as required

ASM: assembly

BBC: blade brake control

BHTF: button head thread forming

CARR: carriage

CCW: counter clockwise

CW: clockwise

DEG: degrees

DPA: Dual Point Adjustment

ECM: electronic control module

EXT: external

FH: flat head

GA: gauge

HD: heavy-duty

HF: hex flange

HH: hex head

HHF: hex head flange

HHFTF: hex head flange thread forming

HJ: hex jam

HLH: hex lag head

HOC: height-of-cut

HSBH: hex socket button head

HSFH: hex socket flat head

HSH: hex socket head

HWH: hex washer head

HWHTF: hex washer head thread forming

HYD: hydraulic

LH: left hand

LP: Liquefied Petroleum Gas

LPG: Liquefied Petroleum Gas

NI: nylon insert

NPTF: national pipe thread fine

PFH: phillips flat head

PPH: phillips pan head

PPHTF: phillips pan head thread forming

PRH: phillips round head

PTH: phillips truss head

PTO: power-take-off

RH: right hand

ROPS: roll-over protection system

RRB: rear roller brush

SFH: slotted fillister head

SHH: slotted hex head

SHWH: slotted hex washer head

SPH: slotted pan head

SQH: square head

SRH: slotted round head

STD: standard

TAP: self tapping

TTH: torx truss head

Contents

Main Frame Assembly 4
Wheel and Bearing Assembly No. 112-3810 5
Parking Brake Assembly 6
Height-of-Cut Plate Assembly 7
Deck Lift Assembly 8
Deck Lift Spring Assembly No. 119-2338 10
Cushion and Platform Assembly 11
Cushion Assembly No. 117-9770 12
Platform Assembly No. 117-7675 13
Traction Drive Assembly 14
Hydraulic Motor Assembly No. 104-1171 16
Hydraulic Pump Assembly No. 119-0176 17
Hydraulic Pump Assembly No. 119-0177 18
Pump Idler Assembly No. 117-7685 19
Motion Control Assembly 20
Speed Control Assembly 21
Engine Assembly 22
Fuel Tank Assembly 24
Vent Hose Assembly 25
Electrical Assembly 26
Deck Assembly 27
Deflector Assembly No. 119-2347 29
Spindle Assembly No. 117-7635 30
Spindle Assembly No. 117-7636 31
Spindle Assembly No. 117-7640 32
Attachments and Accessories 33

© 2013—The Toro® Company
8111 Lyndale Avenue South
Bloomington, MN 55420

Contact us at www.Toro.com.
Printed in the USA.
All Rights Reserved

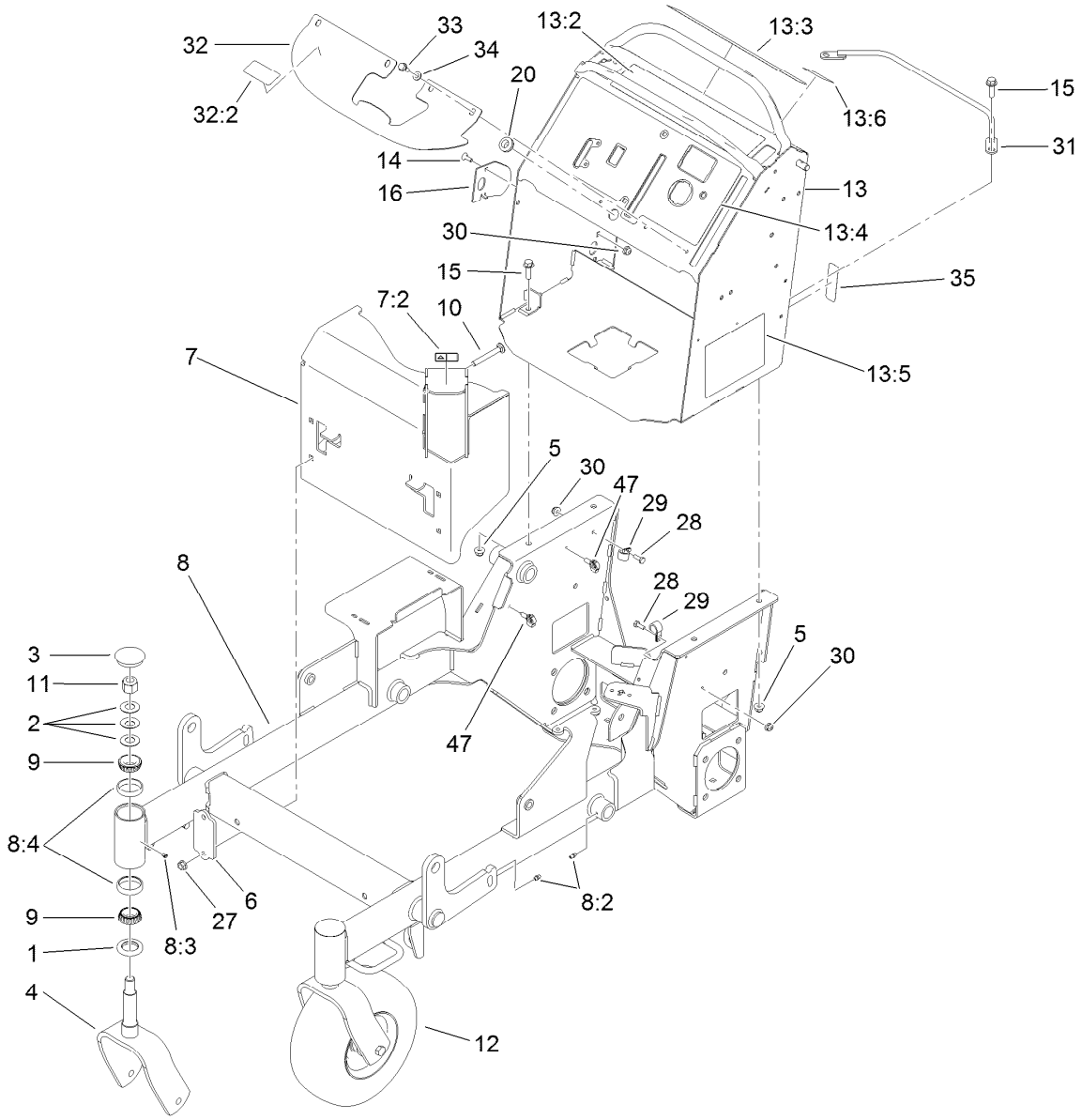

Main Frame Assembly

Ref.	Part Number	Qty.	Description
1	1-543511	2	Seal-Grease
2	1-633508	6	Washer-Bellville
3	103-4882	2	Cap-Grease
4	103-8618-01	2	Fork-Caster
5	104-8301	4	Nut-Flange, NI
6	119-7303-01	2	Bracket-Mounting, Guard
7	119-0230	1	Muffler Guard ASM
7:2	106-5517	1	Decal-Warning, Hot Surface
8	117-7680	1	Frame ASM
8:2	302-5	5	Fitting-Grease
8:3	1-811010	2	Plug
8:4	1-543508	4	Cup-Bearing
9	1-543509	4	Bearing-Roller, Tapered
10	3231-10	4	Screw-CARR
11	3296-51	2	Nut-Lock, NI
12	112-3810	2	Wheel/Tire And Bearing ASM
13	120-6430	1	Control Tower ASM
13:2	117-0454	1	Decal-Opc
13:3	117-3626	1	Decal-Warning
13:4	119-0234	1	Decal-Panel, Control
13:5	119-0241	1	Decal-Service Aid
13:6	120-6447	1	Decal-Stability, Ce
14	1-807512	1	Bolt-CARR
15	119-4061	4	Screw-HHF
16	119-7312	1	Plate-Striker
20	112-7069	1	Grommet
27	32128-21	4	Nut-HF
28	321-4	2	Screw-HH
29	2412-87	2	Clamp-Cable
30	104-7201	3	Nut-HF
31	119-1878-03	1	Retainer-Cable
32	119-0239	1	Cover-Tank
32:2	116-3290	1	Decal-Fill, Fuel
33	32144-11	4	Screw-HWHTF
34	3256-70	4	Washer-Flat
35	116-3267	1	Decal-Fuse
47	32180-040	2	Clip-Harness

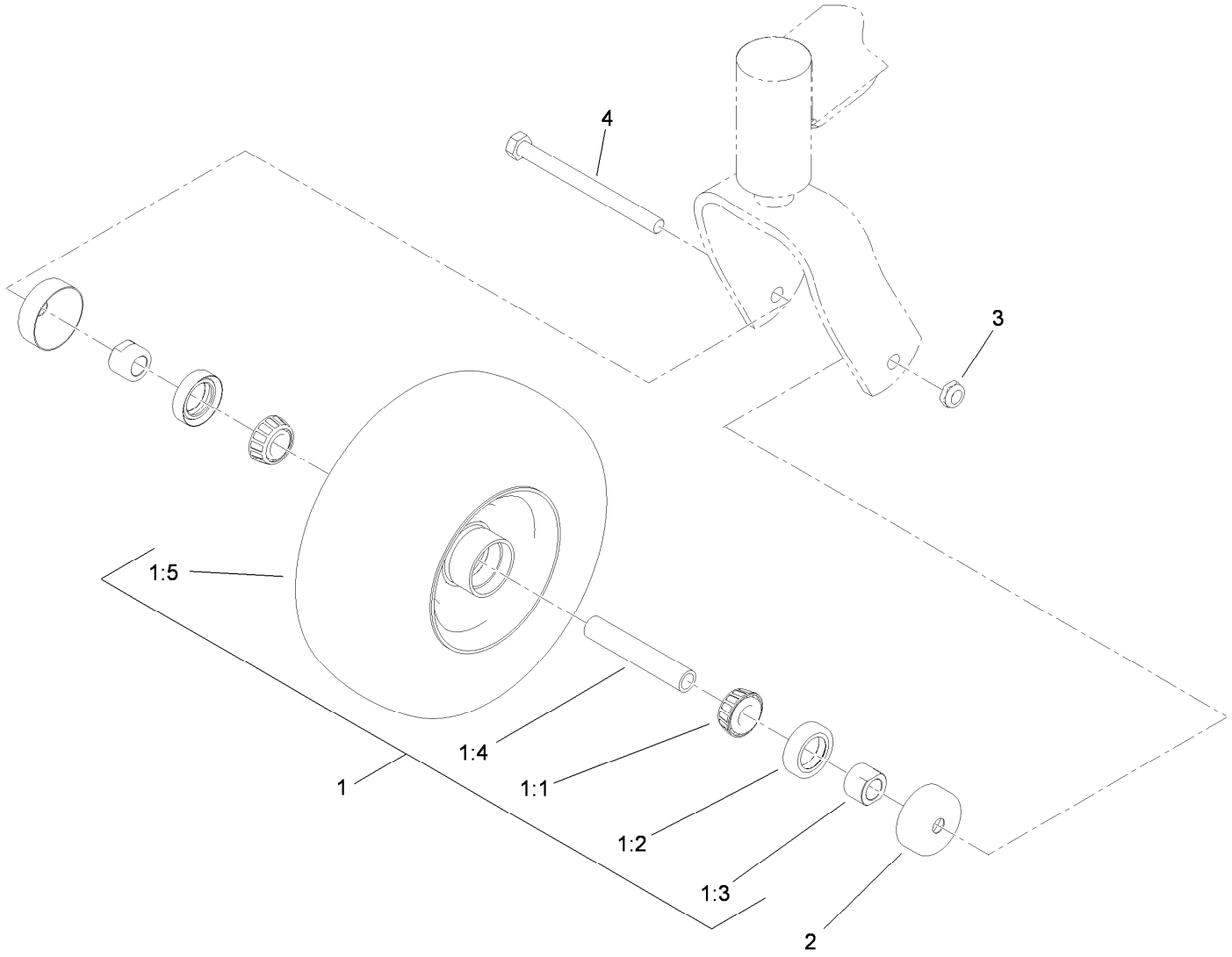

Wheel and Bearing Assembly No. 112-3810

Ref.	*Part Number*	*Qty.*	*Description*
1		1	Wheel And Bearing ASM ●
1:1	1-633585	2	Bearing-Cone, Taper
1:2	103-0063	2	Seal-Caster
1:3	103-3051	2	Spacer-Nut ■
1:4	103-3157	1	Axle-Caster
1:5	110-9965	1	Wheel And Tire ASM
2	103-2768	2	Guard-Seal
3	3296-45	1	Nut-Lock, NI
4	325-20	1	Screw-HH

● Not serviced separately
■ Use Pro-Lock, Nut Type (P/N 1-840022, .5ml tube) on spacer nut

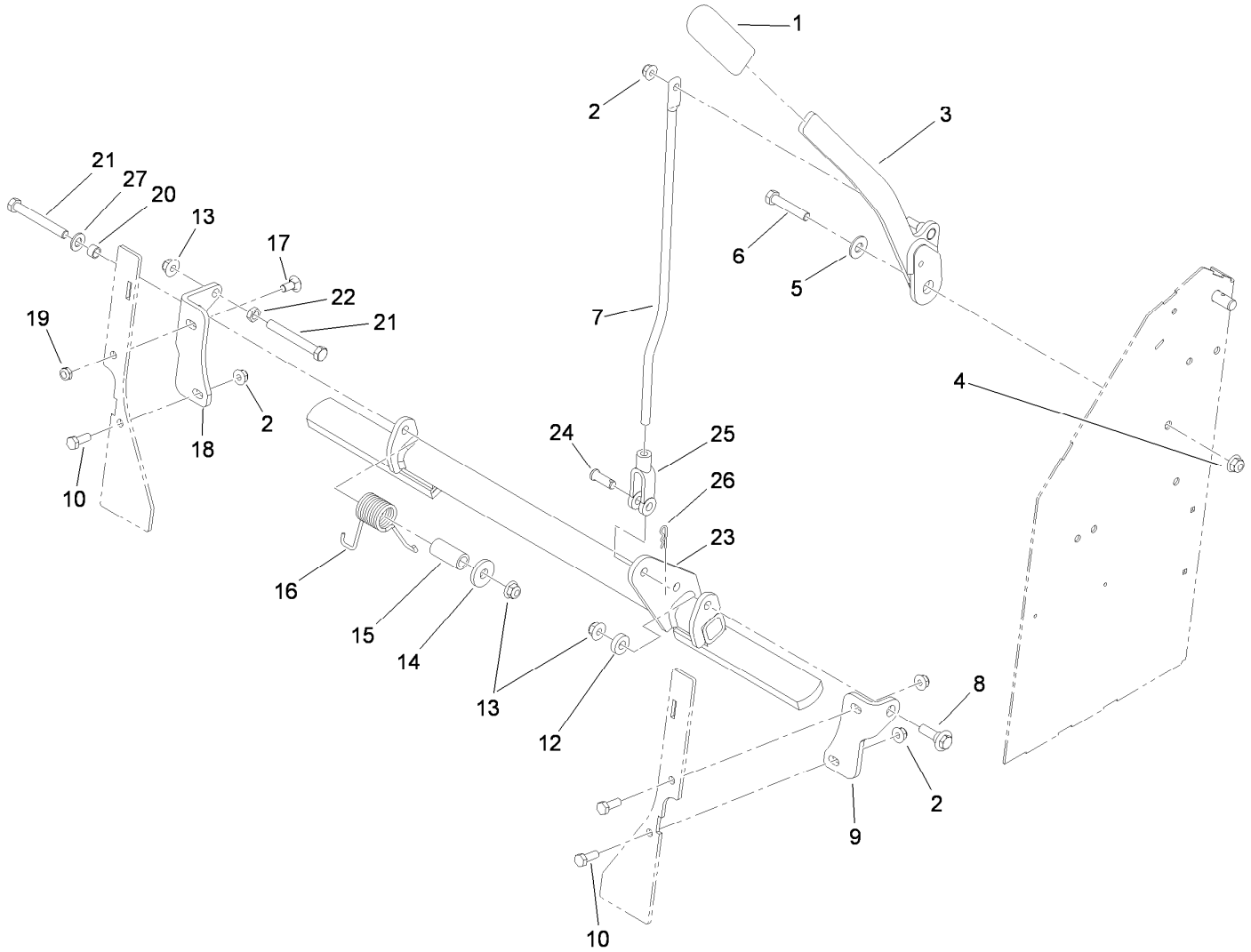

Parking Brake Assembly

Ref.	Part Number	Qty.	Description
1	1-633268	1	Grip-Lever
2	104-8300	4	Nut-Flange, NI
3	119-1861-01	1	Handle-Brake
4	104-8301	1	Nut-Flange, NI
5	3256-4	1	Washer-Flat
6	323-10	1	Screw-HH
7	117-6199	1	Rod-Link, Brake
8	614672	1	Bolt-Shoulder
9	119-1860-01	1	Bracket-Brake Mount, LH
10	322-4	3	Screw-HH
12	5-0652	1	Spacer
13	104-8301	3	Nut-Flange, NI
14	1-373034	1	Washer

Ref.	Part Number	Qty.	Description
15	117-9683	1	Spacer
16	108-4052	1	Spring-Torsion
17	3230-1	1	Bolt-CARR
18	117-6198-01	1	Bracket-Brake Mount, RH
19	3296-47	1	Nut-Lock, NI
20	117-9684	1	Spacer
21	323-20	2	Screw-HH
22	3218-3	1	Nut-Jam
23	117-6197-03	1	Brake ASM
24	283-2	1	Pin-Clevis
25	1-633131	1	Yoke-Linkage, Brake
26	3290-307	1	Pin-Hair
27	3256-24	1	Washer-Flat

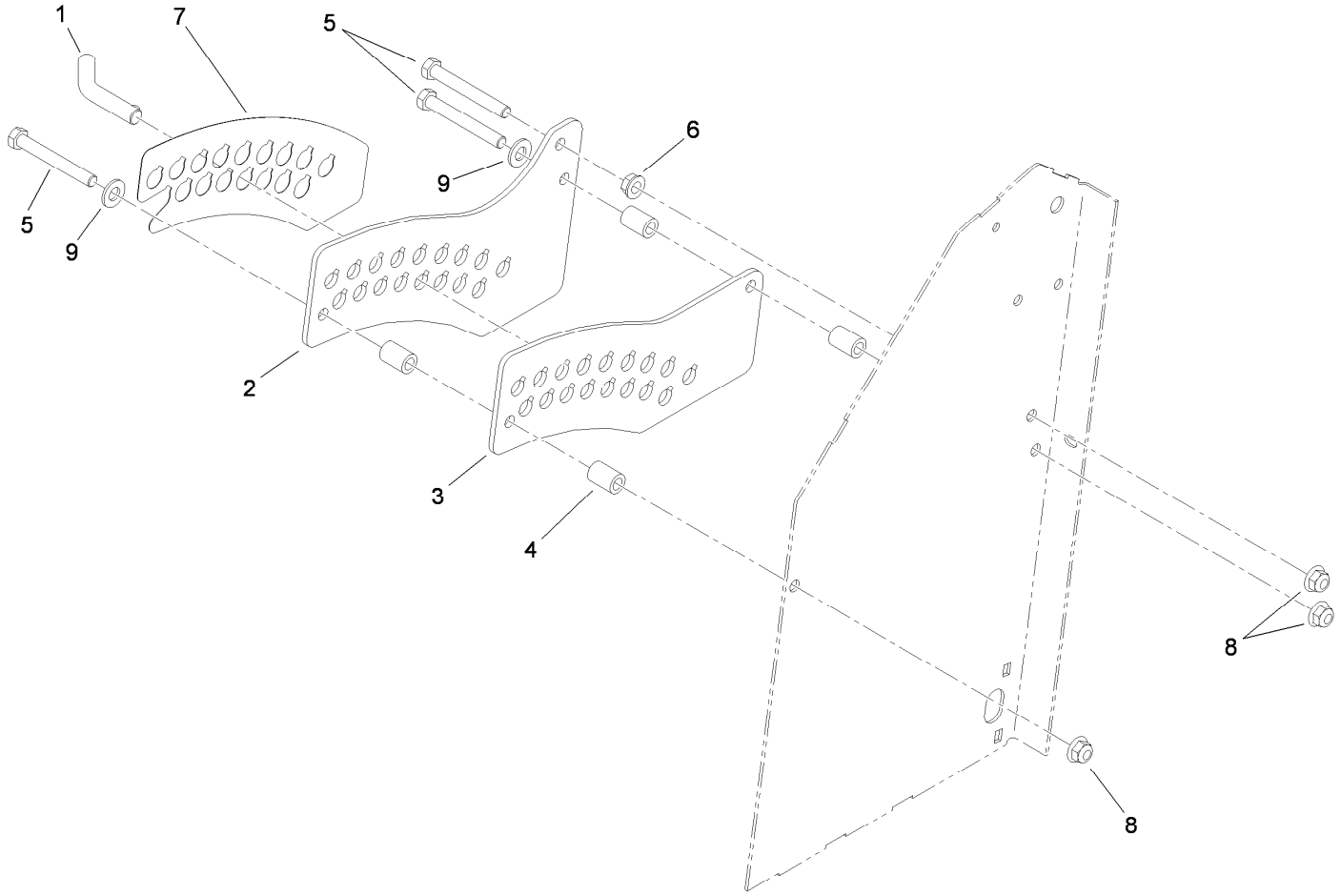

Height-of-Cut Plate Assembly

Ref.	*Part Number*	*Qty.*	*Description*
1	109-8757	1	Pin-HOC
2	117-5286-01	1	Plate-HOC, Outside
3	117-5287-01	1	Plate-HOC, Inside
4	114-2754	4	Spacer
5	323-14	3	Screw-HH
6	3290-357	1	Nut-HHF, Whiz
7	119-2317	1	Decal-HOC
8	104-8301	3	Nut-Flange, NI
9	3256-24	2	Washer-Flat

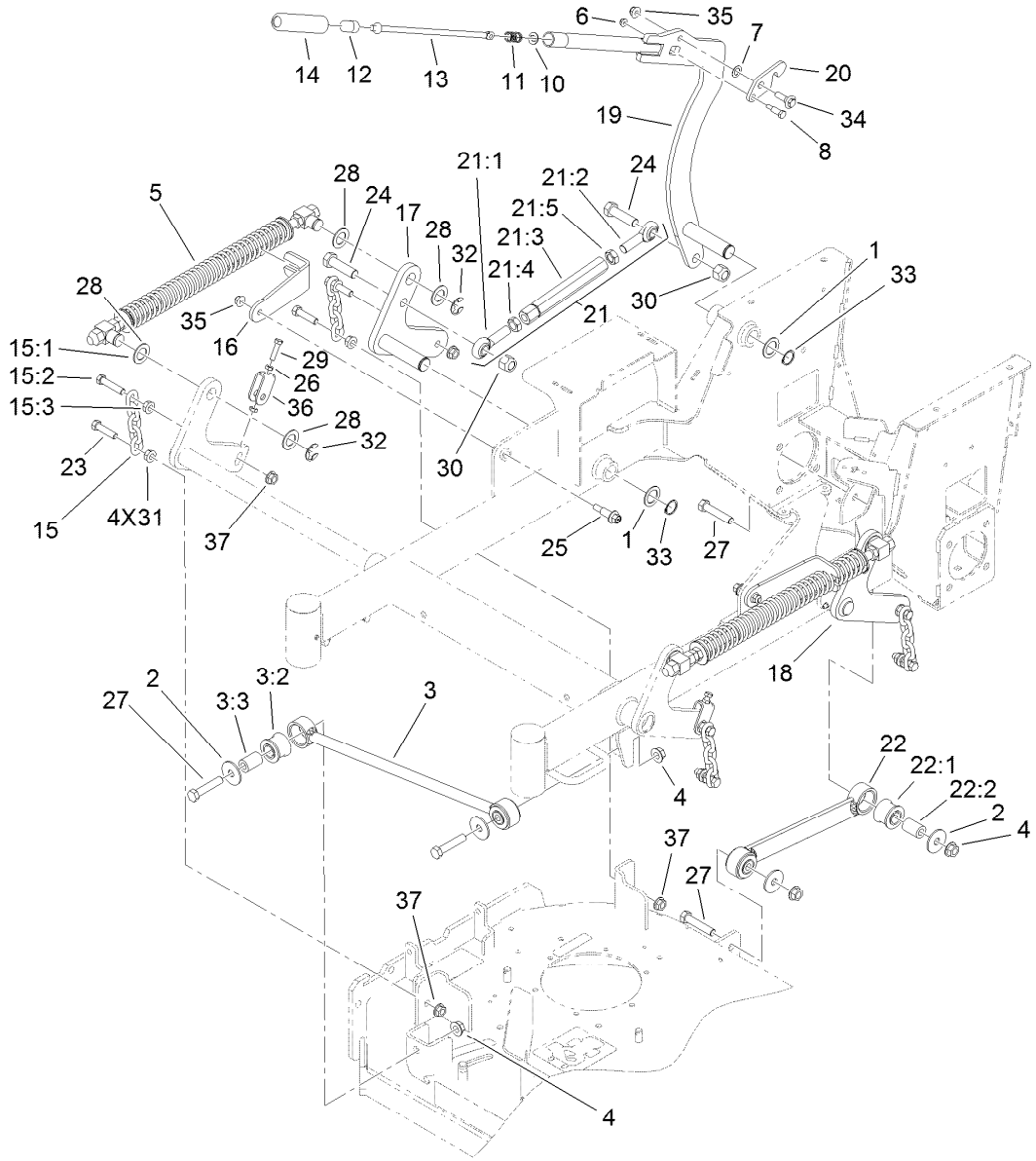

Deck Lift Assembly

Ref.	Part Number	Qty.	Description
1	1-523157	3	Washer-Spacer
2	86-1990	6	Washer
3	109-5013	1	Panhard Rod ASM
3:2	109-5009	2	Bushing-Suspension, Rubber
3:3	109-5010	2	Spacer
4	32128-23	6	Nut-HF
5	119-2338	2	Deck Lift Spring ASM
6	104-7201	1	Nut-HF
7	98-1629	1	Washer
8	119-2309	1	Bolt-Shoulder
10	114-1207	1	Washer-Special
11	114-8187	1	Spring-Compression
12	115-2750	1	Knob
13	119-2331	1	Rod-Latch
14	115-3592	1	Grip
15	116-0756	4	Deck Lift Chain ASM
15:1	1-633447	1	Chain-Lift, Deck
15:2	109-9065	1	Screw-HH
15:3	32128-37	1	Nut-HF
16	119-2302-01	2	Bracket-Fork

Ref.	Part Number	Qty.	Description
17	117-5276-01	1	RH Lift Arm ASM
18	117-5277-01	1	LH Lift Arm ASM
19	117-5290-01	1	Arm-Lift, HOC
20	117-5292	1	Latch-HOC
21	119-0383	1	Deck Lift Link ASM
21:1	1-633029	1	Balljoint-Spherical
21:2	117-5291	1	Balljoint-Spherical
21:3	119-0382	1	Link-Lift, Deck
21:4	3220-6	1	Nut-Jam
21:5	117-5293	1	Nut-Jam
22	119-0384	2	Deck Strut ASM
22:1	109-5009	2	Bushing-Suspension, Rubber
22:2	109-5010	2	Spacer
23	324-7	4	Screw-HH
24	327-22	2	Screw-HH
25	62-1330	2	Bolt-Shoulder
26	3218-2	4	Nut-Jam
27	325-10	6	Screw-HH
28	119-2332	8	Washer-Flat
29	119-3626	2	Screw-HH

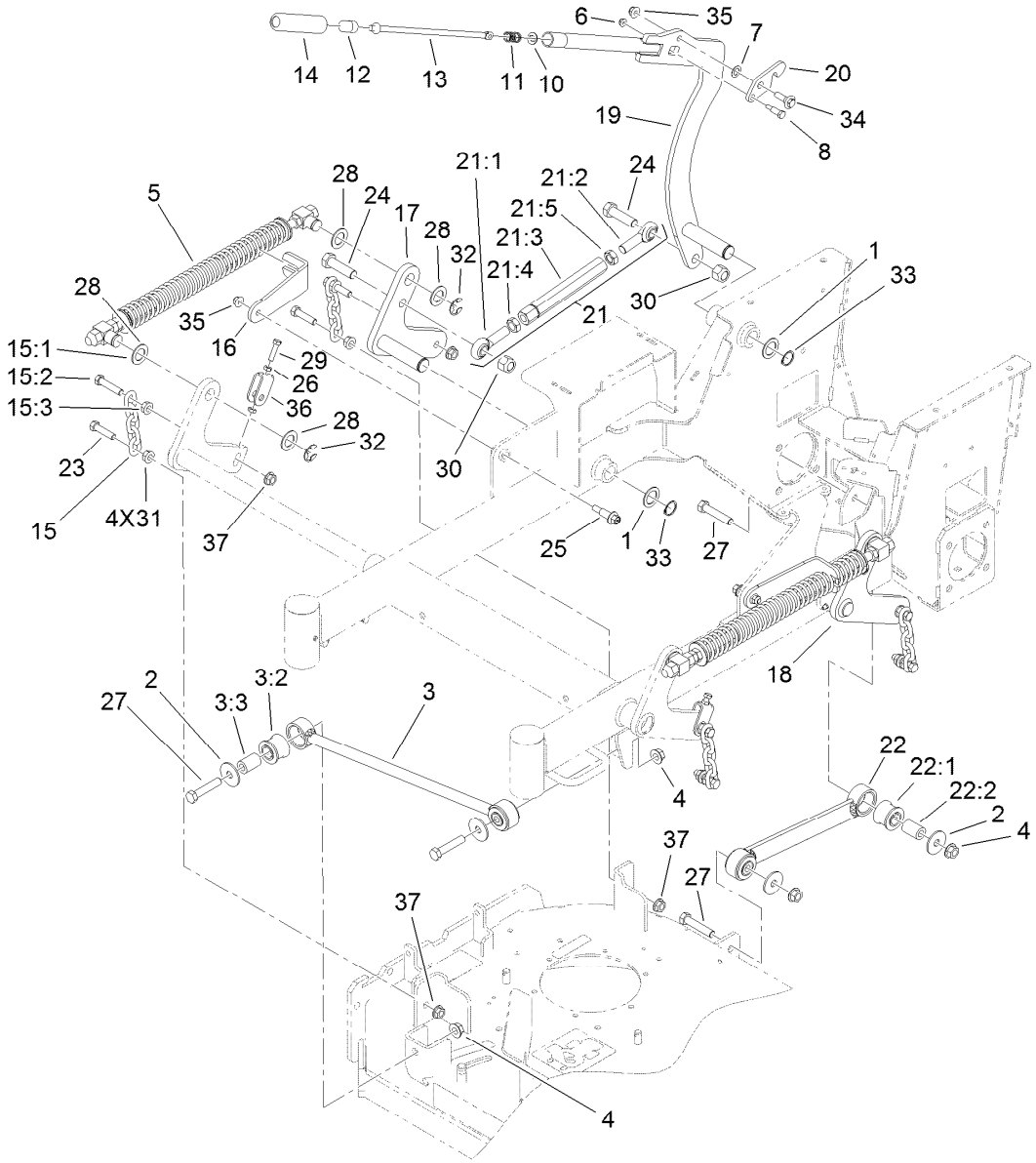

Deck Lift Assembly (continued)

Ref.	Part Number	Qty.	Description
30	3296-53	2	Nut-Lock, NI
31	32128-37	4	Nut-HF
32	32151-103	4	Ring-Retaining, EXT
33	32151-29	3	Ring-Retaining

Ref.	Part Number	Qty.	Description
34	614672	1	Bolt-Shoulder
35	104-8301	3	Nut-Flange, NI
36	109-9066	2	Yoke-Adjust, Deck
37	32128-42	8	Nut-HF

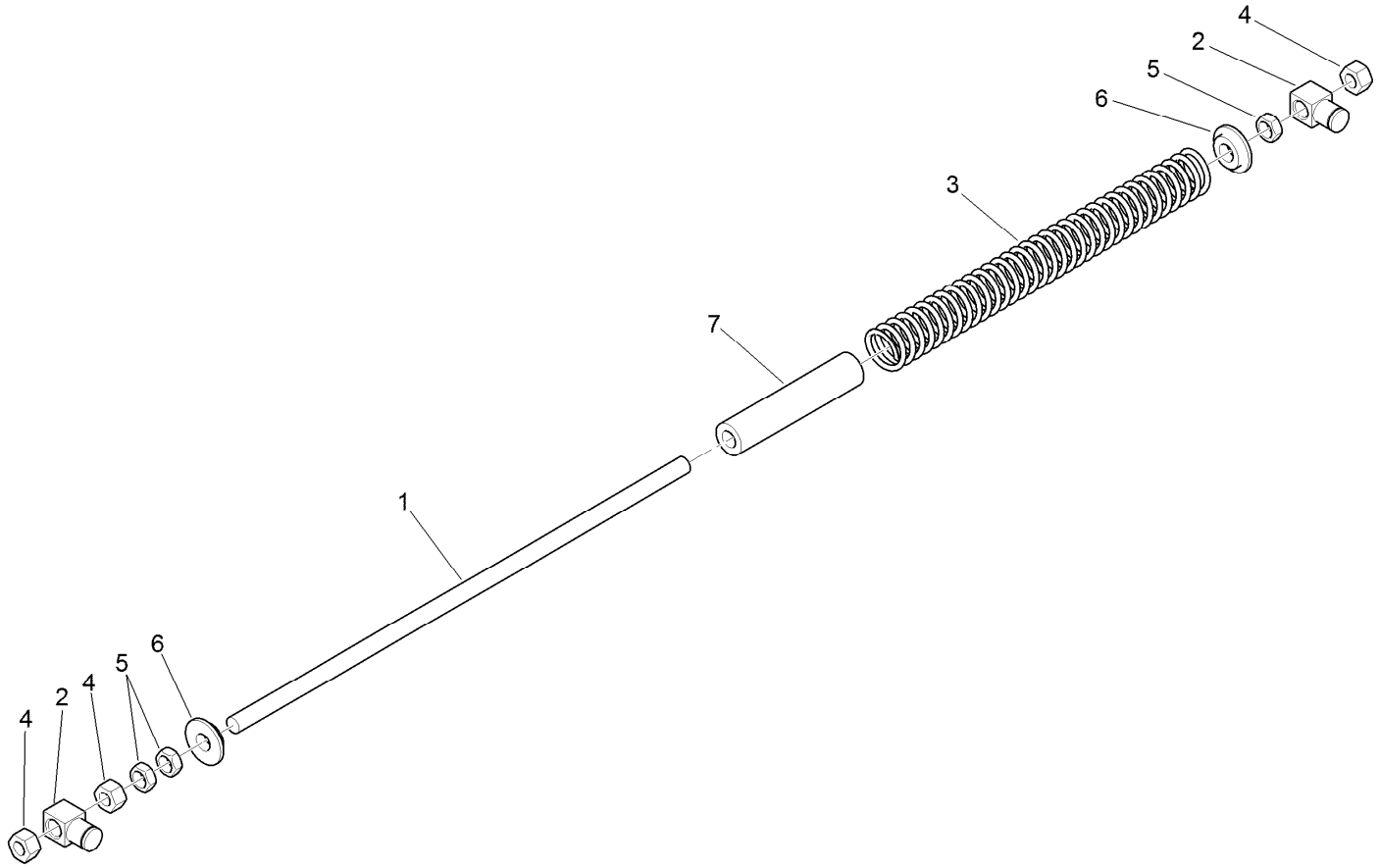

Deck Lift Spring Assembly No. 119-2338

Ref.	*Part Number*	*Qty.*	*Description*
1	119-2333	1	Rod-Lift, Deck
2	1-633441	2	Swivel-Deck Mount, Rear
3	119-2328	1	Spring-Compression
4	3217-11	3	Nut-Hex
5	3218-6	3	Nut-Jam
6	119-2334	2	Washer-Step
7	119-2335	1	Tube-Guide, Spring

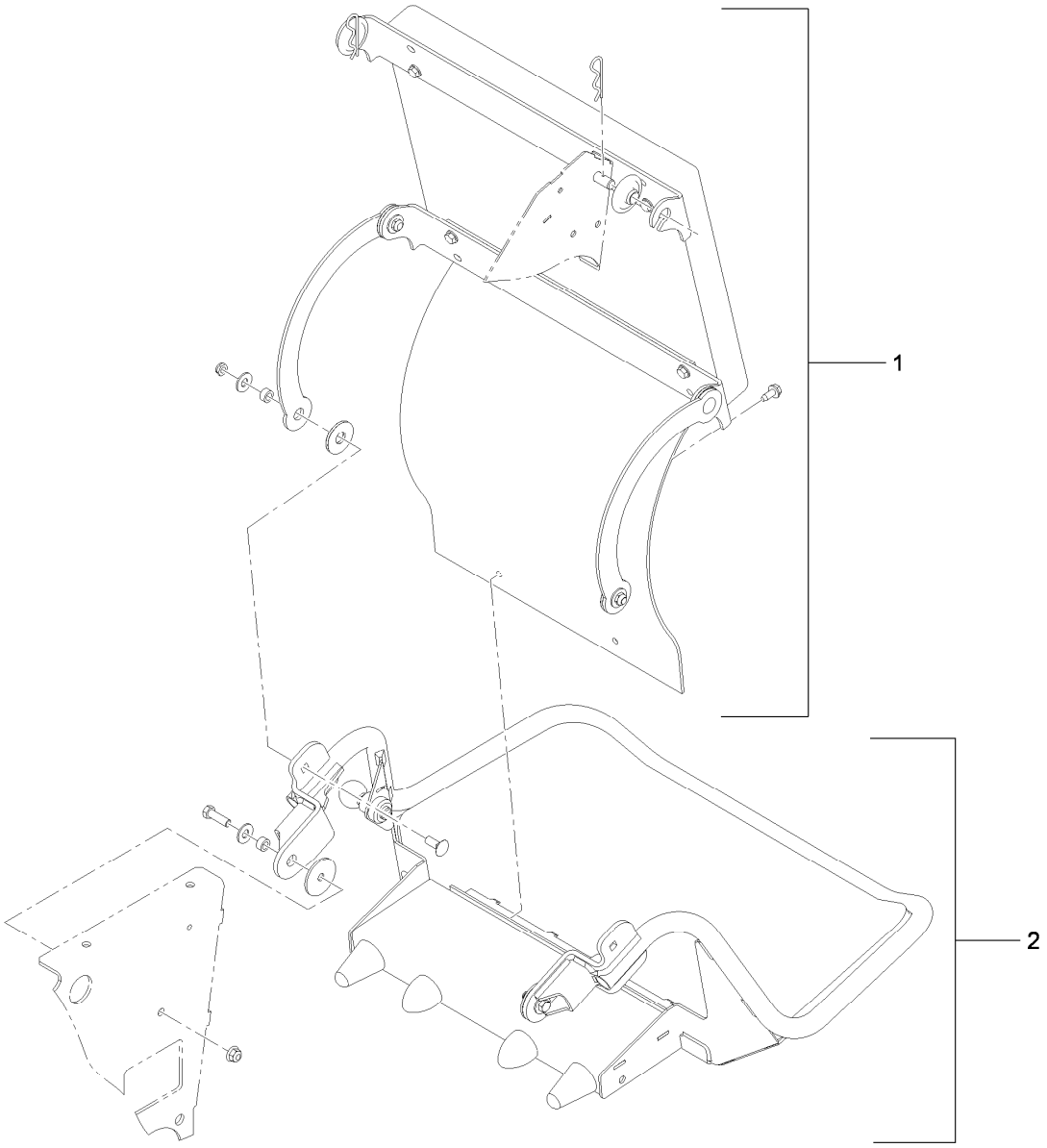

Cushion and Platform Assembly

Ref.	Part Number	Qty.	Description
1	117-9770	1	Cushion ASM
2	117-7675	1	Platform ASM

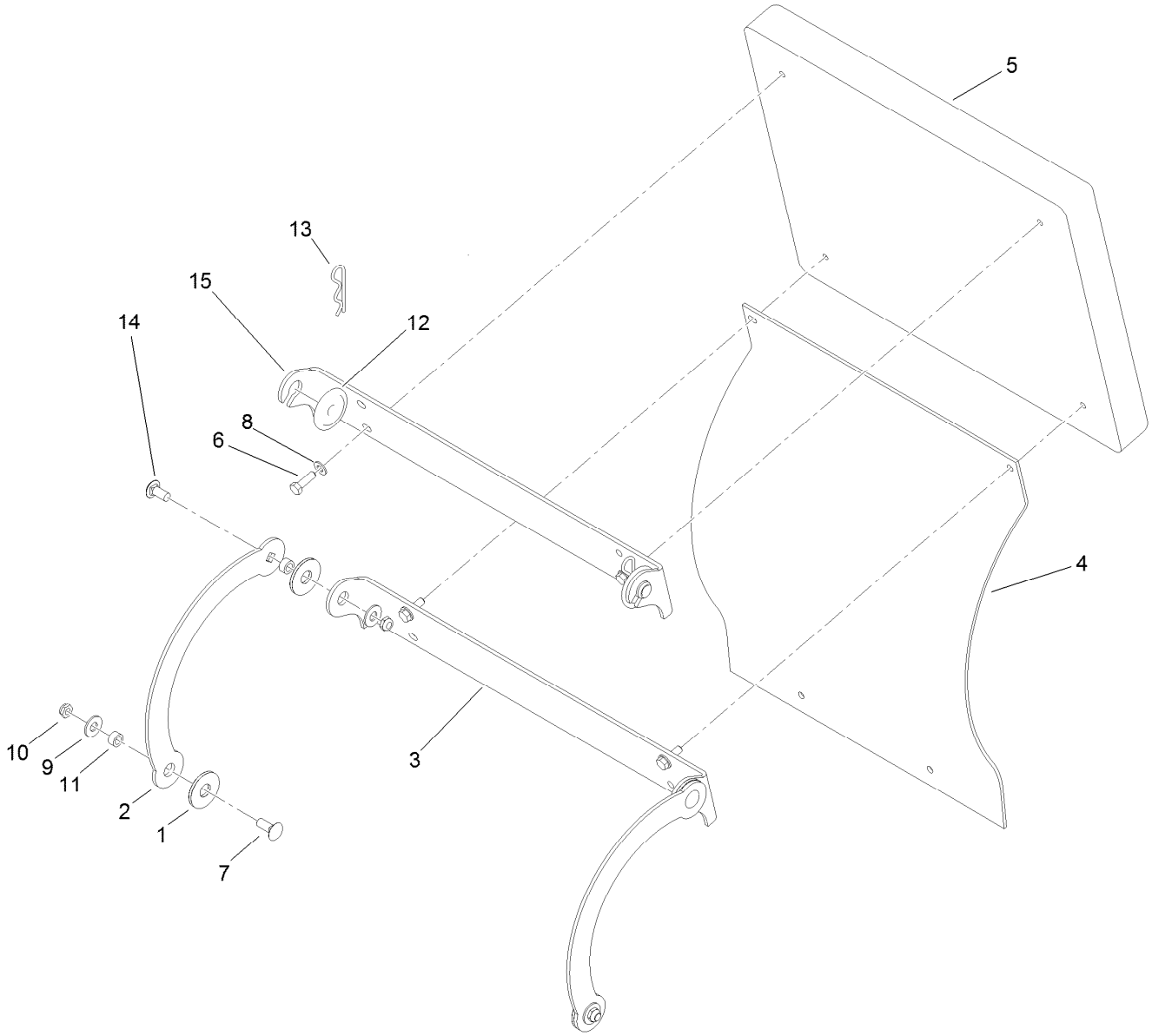

Cushion Assembly No. 117-9770

Ref.	Part Number	Qty.	Description
1	114-0463	4	Washer-Friction, Composite
2	114-1915-01	2	Link-Pad
3	116-2061-03	1	Hinge-Pad
4	114-1919	1	Shield-Rear
5	117-9739	1	Pad-Cushion
6	116-0648	4	Screw-HH, Thread Locking
7	3231-2	2	Bolt-CARR
8	3256-23	4	Washer-Flat
9	3256-4	4	Washer-Flat
10	3296-59	4	Nut-Lock, NI
11	111044	4	Spacer
12	116-2886	2	Slide-Bushing
13	3290-355	2	Pin-Hair
14	3231-27	2	Screw-CARR
15	116-2757-03	1	Hinge-Pad

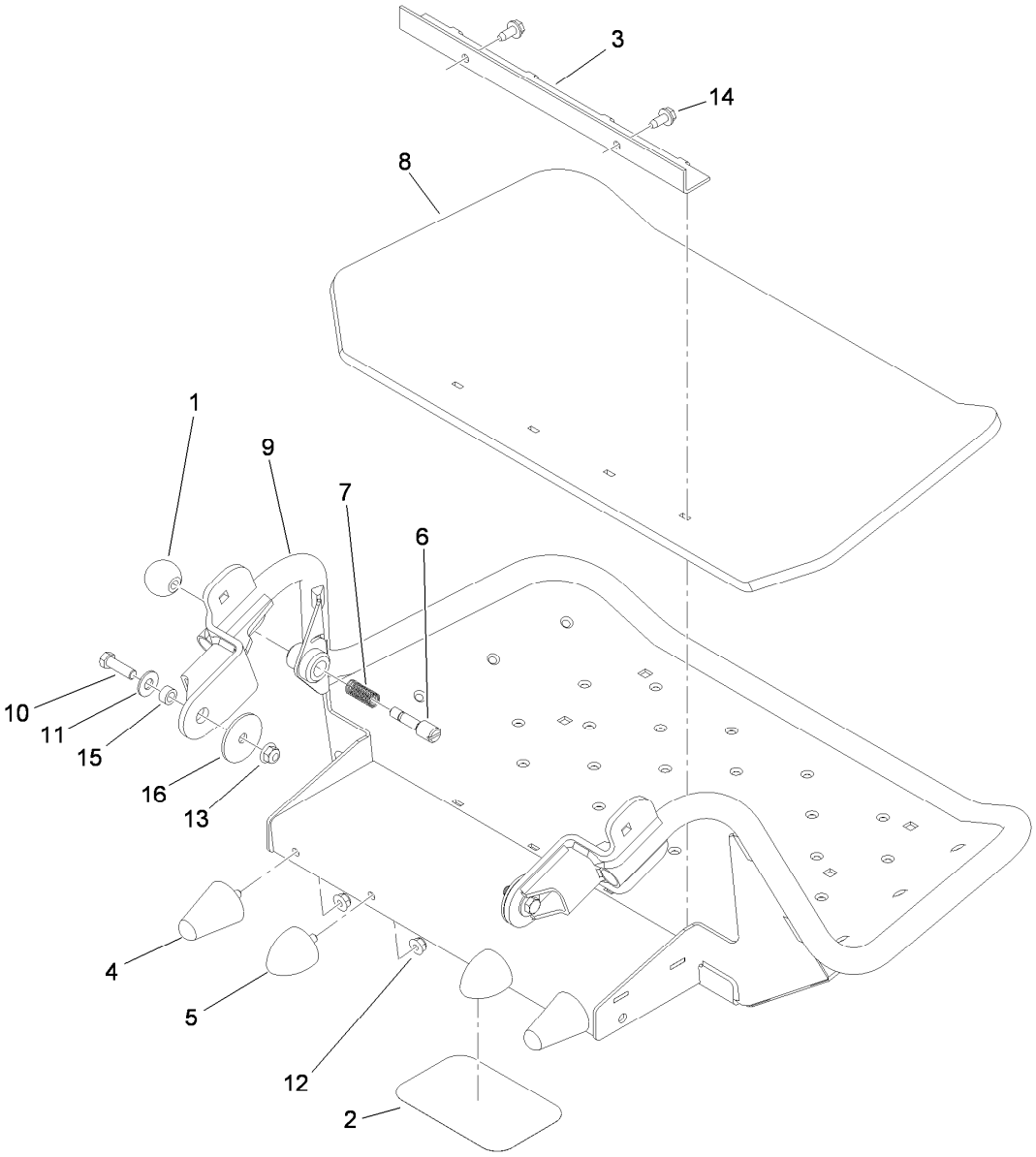

Platform Assembly No. 117-7675

Ref.	Part Number	Qty.	Description
1	1-603175	1	Knob-Ball
2	68-3640	1	Decal
3	114-1920-03	1	Clamp-Shield
4	114-1925	2	Bumper-Rubber
5	114-1926	2	Bumper-Rubber
6	119-8650	1	Pin-Latch
7	114-5348	1	Spring
8	114-5349	1	Mat-Foot

Ref.	Part Number	Qty.	Description
9	117-7660-01	1	Platform
10	323-7	2	Screw-HH
11	3256-4	2	Washer-Flat
12	104-8300	4	Nut-Flange, NI
13	104-8301	2	Nut-Flange, NI
14	32144-11	2	Screw-HWHTF
15	111044	2	Spacer
16	83-1040	2	Washer-Flat

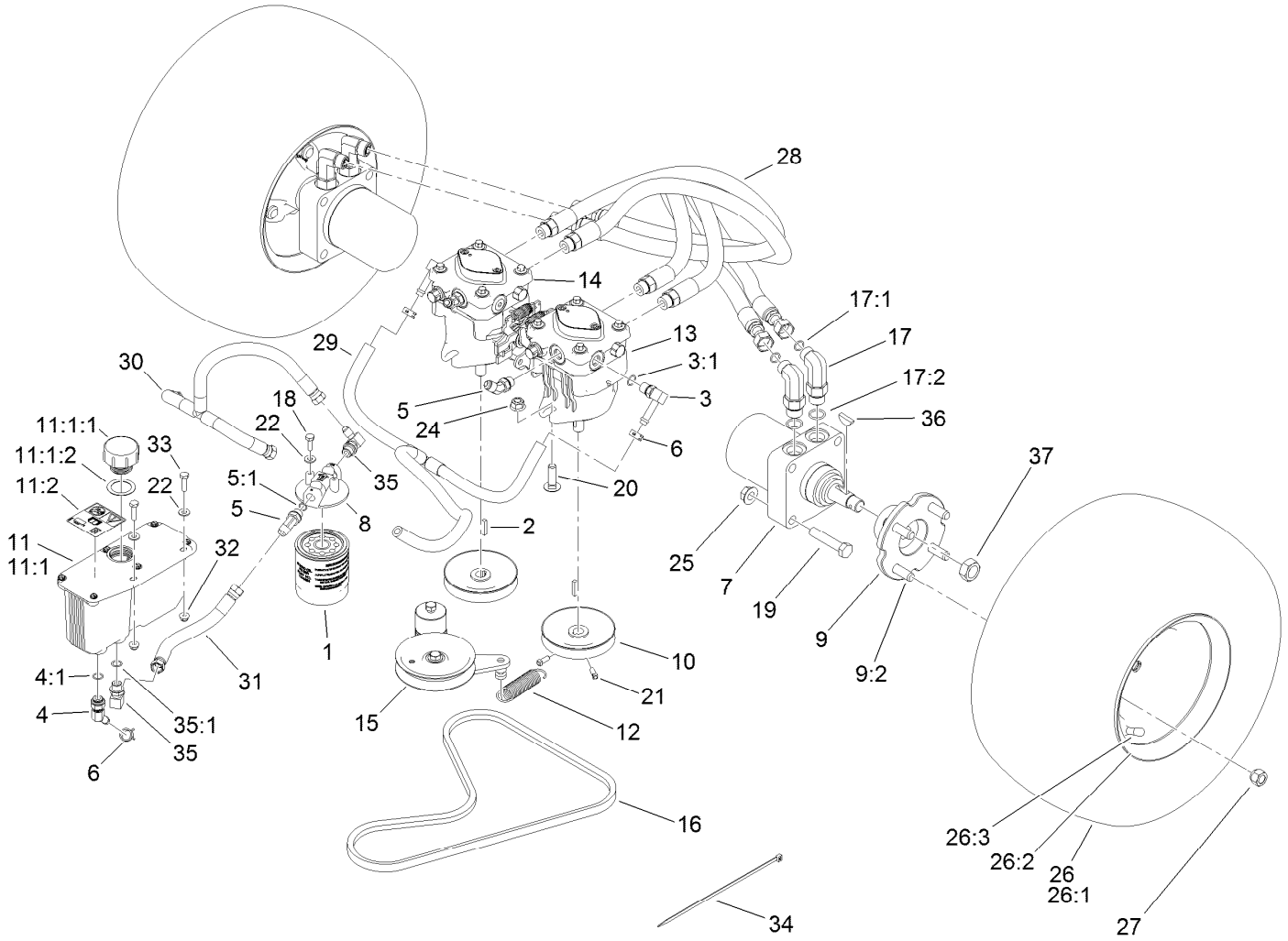

Traction Drive Assembly

Ref.	Part Number	Qty.	Description
1	114-3494	1	Element-Filter, 25 Micron
2	1-807272	2	Key
3	100-4887	2	Fitting-Barbed, 90 DEG
3:1	237-42	1	O-Ring
4	103-1807	1	Fitting-Barbed, 45 DEG
4:1	237-42	1	O-Ring
5	353-212	3	Fitting-HYD, 45 DEG
5:1	237-42	1	O-Ring
6	103-1988	3	Clamp-Hose
7	104-1171	2	HYD Motor ASM
8	104-7836	1	Head-Filter
9	105-0800	2	Wheel Hub ASM
9:2	10-6830	4	Stud-Type, Drive
10	105-5648	2	Pulley-Pump
11	107-8433	1	HYD Reservoir ASM
11:1		1	Reservoir-HYD ●
11:1:1	103-1948	1	Cap-Reservoir, HYD
11:1:2	103-1949	1	Gasket-Cap

Ref.	Part Number	Qty.	Description
11:2	115-4212	1	Decal-Warning
12	108-4056	1	Spring-Extension
13	119-0176	1	Hydraulic Pump ASM
14	119-0177	1	Hydraulic Pump ASM
15	117-7685	1	Pump Idler ASM
16	119-0174	1	Belt-V
17	119-8680	4	Fitting-Elbow, 90
17:1	237-30	1	O-Ring
17:2	237-80	1	O-Ring
18	321-4	2	Screw-HH
19	325-10	8	Screw-HH
20	3232-3	4	Bolt-CARR
21	3241-5	4	Screw-Set
22	3256-22	4	Washer-Flat
24	114-8417	4	Nut-HF, NI
25	32128-23	8	Nut-HF
26	120-6450	2	Wheel/Tire ASM
26:1	116-4605	1	Rim-8 Inch

● Not serviced separately

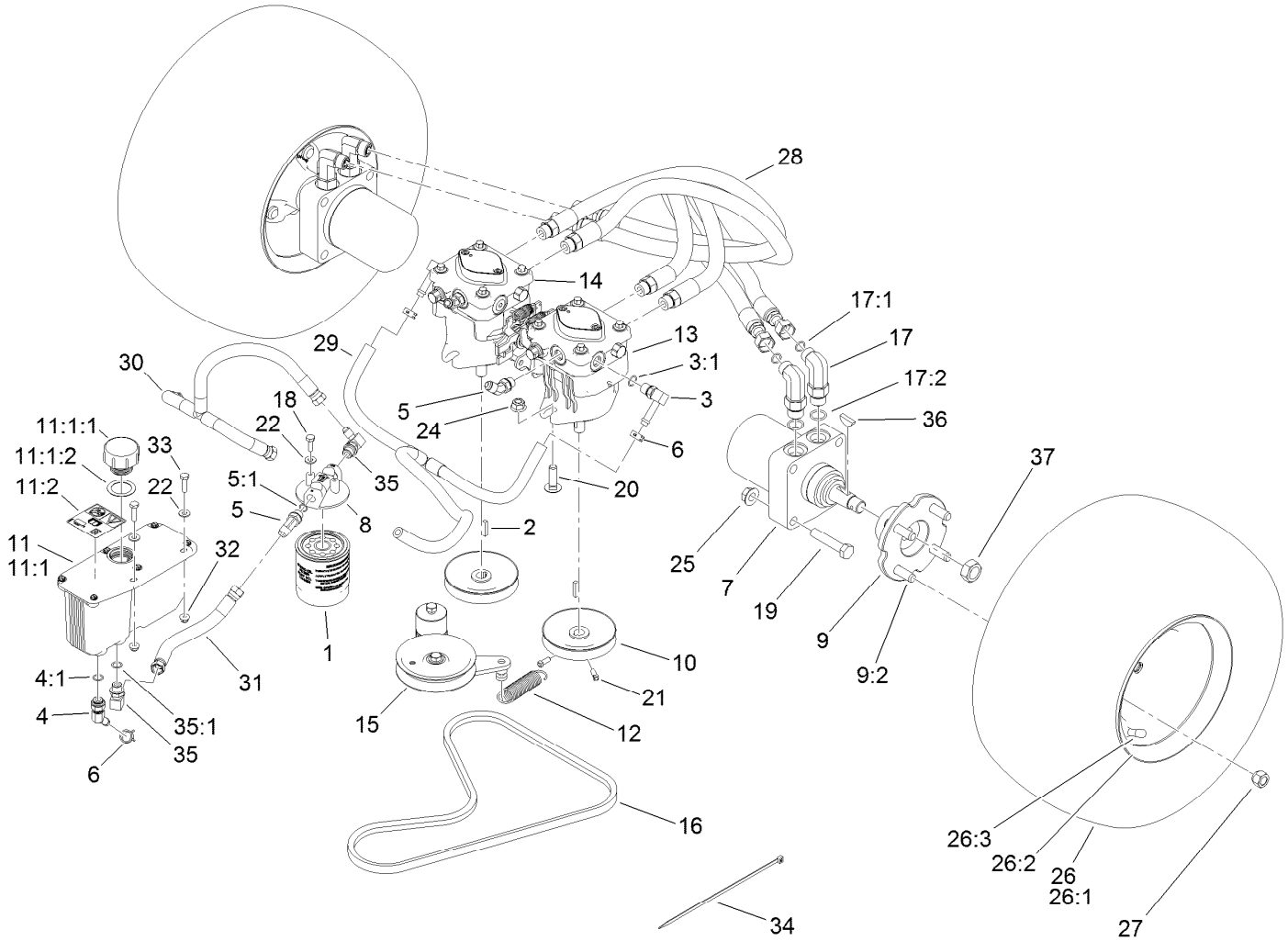

Traction Drive Assembly (continued)

Ref.	Part Number	Qty.	Description
26:2	120-6451	1	Tire
26:3	232-27	1	Stem-Valve
27	242-50	8	Nut-Lug
28	119-0173	4	HYD Hose ASM
29	119-8745	1	HYD Hose ASM
30	119-0206	1	HYD Hose ASM
31	119-0203	1	HYD Hose ASM

Ref.	Part Number	Qty.	Description
32	104-7201	2	Nut-HF
33	321-6	2	Screw-HH
34	3290-378	1	Tie-Cable
35	103-1802	2	Fitting-HYD, 90 DEG
35:1	1-603921	1	O-Ring
36	3257-8	2	Key-Woodruff
37	85-7310	2	Nut-Motor, Wheel

● Not serviced separately

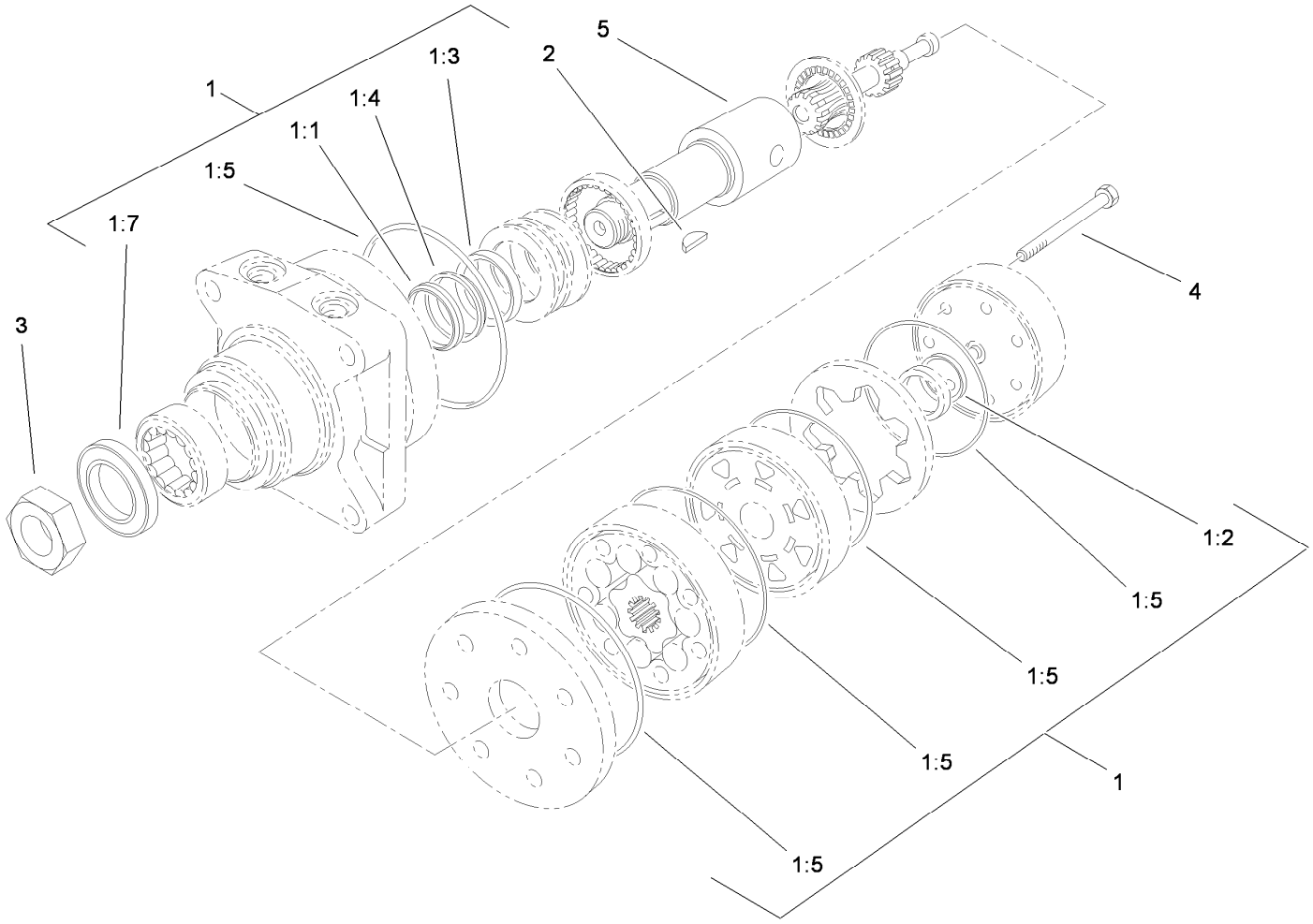

Hydraulic Motor Assembly No. 104-1171

Ref.	*Part Number*	*Qty.*	*Description*
1	1-000119	1	Seal Kit
1:1		1	Ring-Back Up ●
1:2		1	Seal-Commutator ●
1:3		1	Seal-Shaft (Viton) ●
1:4		1	Washer-Back Up, Steel ●
1:5		5	Ring-Seal (Viton) ●
1:7		1	Seal-Dirt And Water ●
2	3257-8	1	Key-Woodruff
3	85-7310	1	Nut-Motor, Wheel
4	106-5549	6	Bolt-Special
5	106-8764	1	Shaft-Coupling

● Not serviced separately

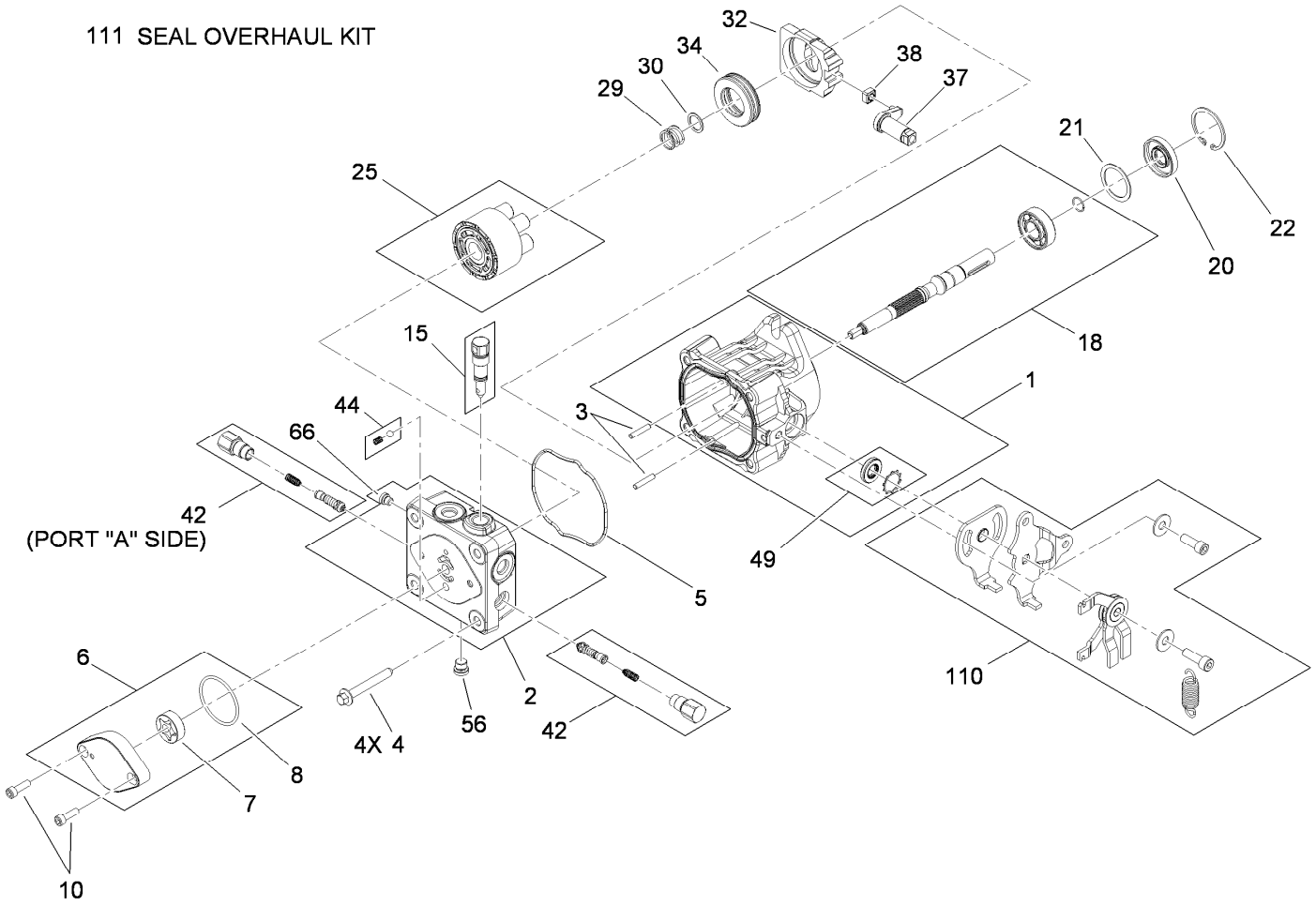

Hydraulic Pump Assembly No. 119-0176

Ref.	Part Number	Qty.	Description
1	115-4464	1	Housing Kit
2	119-0184	1	End Cap STD Charge Kit
3	106-8753	2	Pin-Headless, Straight
4	106-8754	4	Bolt-HF
5	106-8755	1	O-Ring
6	106-8756	1	Charge Pump Kit
7	104-2122	1	Gerotor ASM
8	106-8757	1	O-Ring
10	104-2111	2	Capscrew
15	106-8759	1	Bypass Valve Kit
18	103-2664	1	Input Shaft Kit
20	104-5310	1	Seal-Lip
21	104-5308	1	Spacer
22	104-5309	1	Ring-Retaining
25	103-2666	1	Cylinder Block Kit

Ref.	Part Number	Qty.	Description
29	94-1936	1	Spring-Block
30	94-1937	1	Washer-Thrust
32	94-1907	1	Swashplate-Variable
34	94-6922	1	Bearing-Thrust
37	115-4458	1	Arm-Trunnion, Tapered Square
38	94-1910	1	Guide-Slot
42	98-3252	2	Valve-Check (W/Poppet)
44	112-4164	1	Charge Relief Kit
49	106-8761	1	Trunnion Seal / Retainer Kit
56	106-8762	1	Plug-HSH
66	106-8763	1	Plug-HSH
110	115-4459	1	Kit-Return
111	105-6184	1	Seal Overhaul Kit

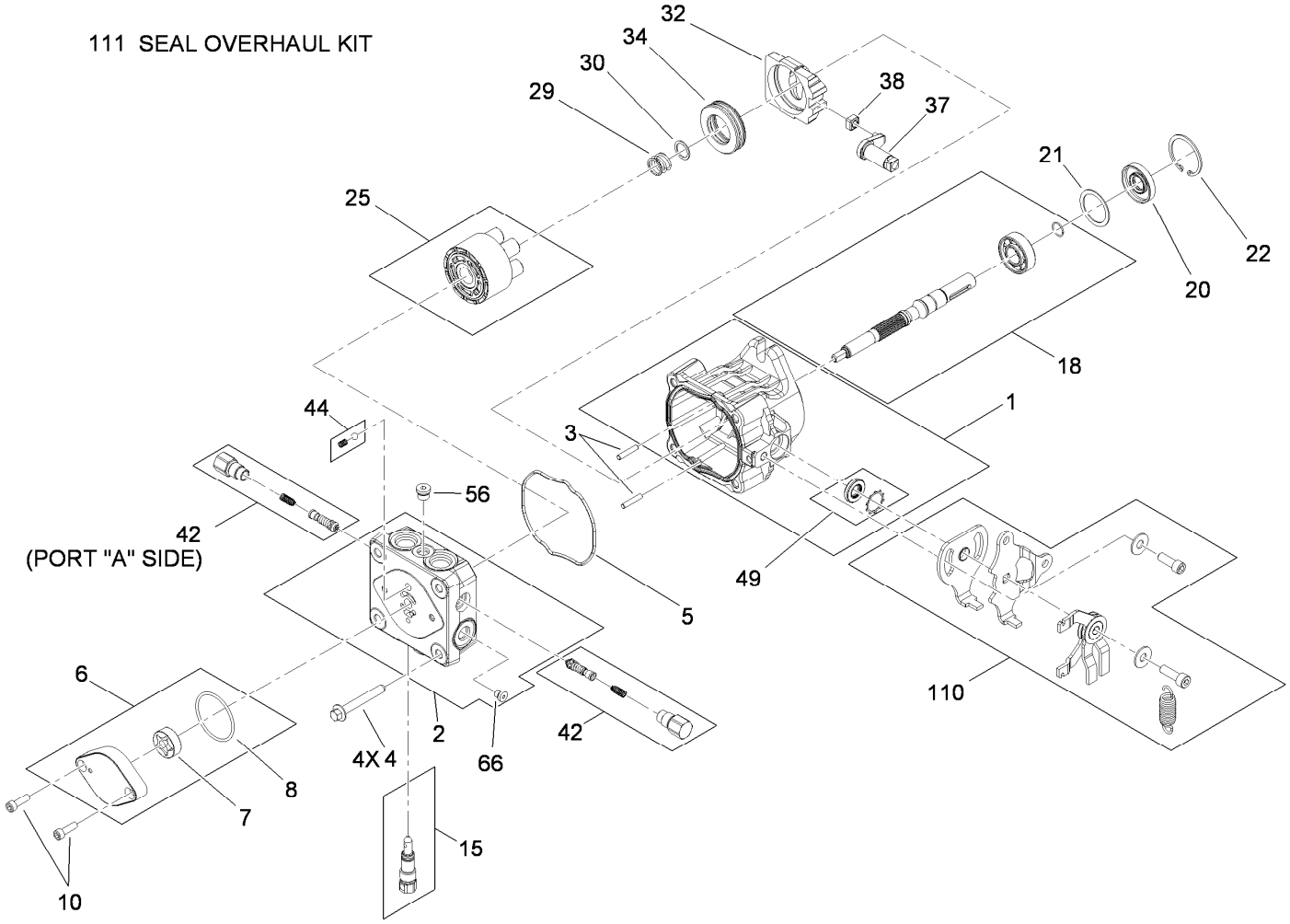

Hydraulic Pump Assembly No. 119-0177

Ref.	Part Number	Qty.	Description
1	115-4464	1	Housing Kit
2	119-0184	1	End Cap STD Charge Kit
3	106-8753	2	Pin-Headless, Straight
4	106-8754	4	Bolt-HF
5	106-8755	1	O-Ring
6	106-8756	1	Charge Pump Kit
7	104-2122	1	Gerotor ASM
8	106-8757	1	O-Ring
10	104-2111	2	Capscrew
15	106-8759	1	Bypass Valve Kit
18	103-2664	1	Input Shaft Kit
20	104-5310	1	Seal-Lip
21	104-5308	1	Spacer
22	104-5309	1	Ring-Retaining
25	103-2666	1	Cylinder Block Kit

Ref.	Part Number	Qty.	Description
29	94-1936	1	Spring-Block
30	94-1937	1	Washer-Thrust
32	94-1907	1	Swashplate-Variable
34	94-6922	1	Bearing-Thrust
37	115-4458	1	Arm-Trunnion, Tapered Square
38	94-1910	1	Guide-Slot
42	98-3252	2	Valve-Check (W/Poppet)
44	112-4164	1	Charge Relief Kit
49	106-8761	1	Trunnion Seal / Retainer Kit
56	106-8762	1	Plug-HSH
66	106-8763	1	Plug-HSH
110	115-4459	1	Kit-Return
111	105-6184	1	Seal Overhaul Kit

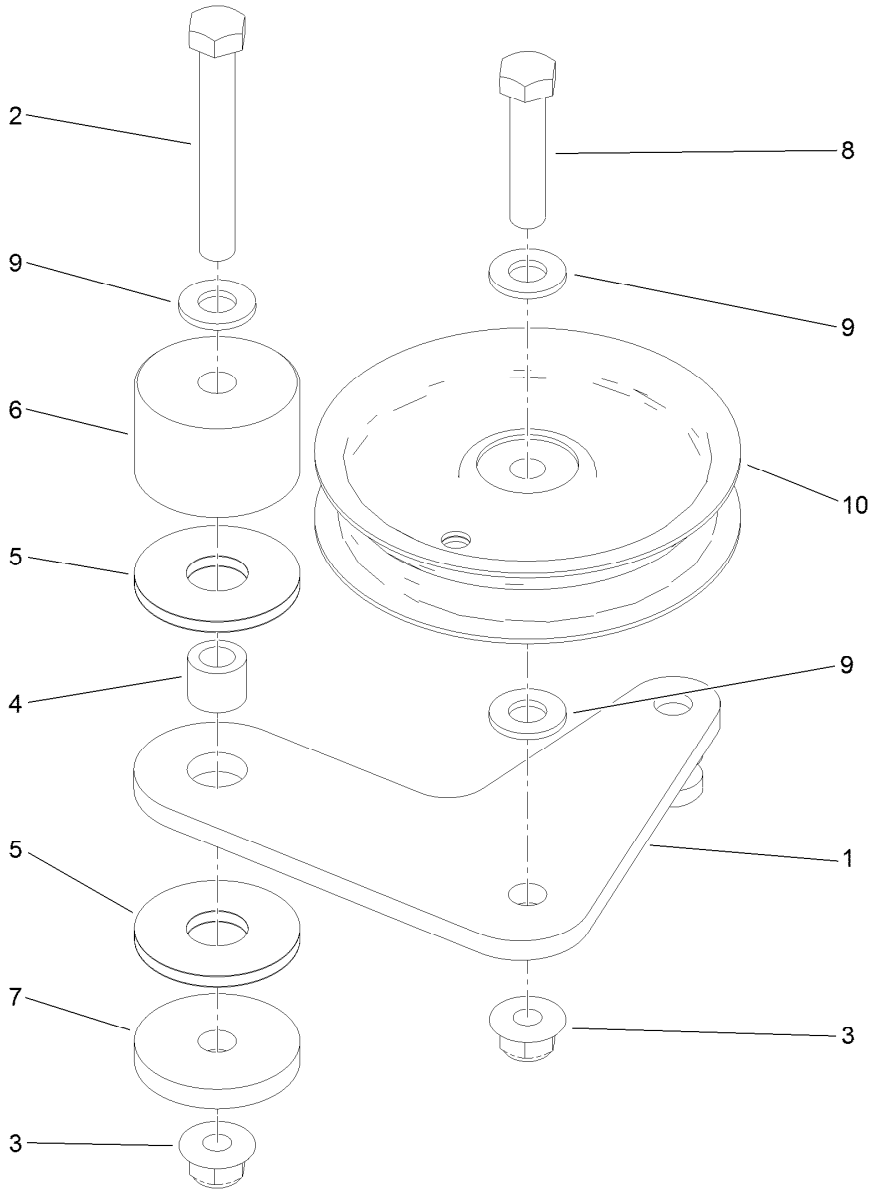

Pump Idler Assembly No. 117-7685

Ref.	*Part Number*	*Qty.*	*Description*
1	117-7684	1	Plate-Idler
2	323-13	1	Screw-HH
3	104-8301	2	Nut-Flange, NI
4	1-413088	1	Bushing-Lever, Lift
5	114-0463	2	Washer-Friction, Composite
6	117-3568	1	Hub-Idler
7	110-9981	1	Washer-Plain
8	323-9	1	Screw-HH
9	3256-24	3	Washer-Flat
10	93-1622	1	Pulley-Idler

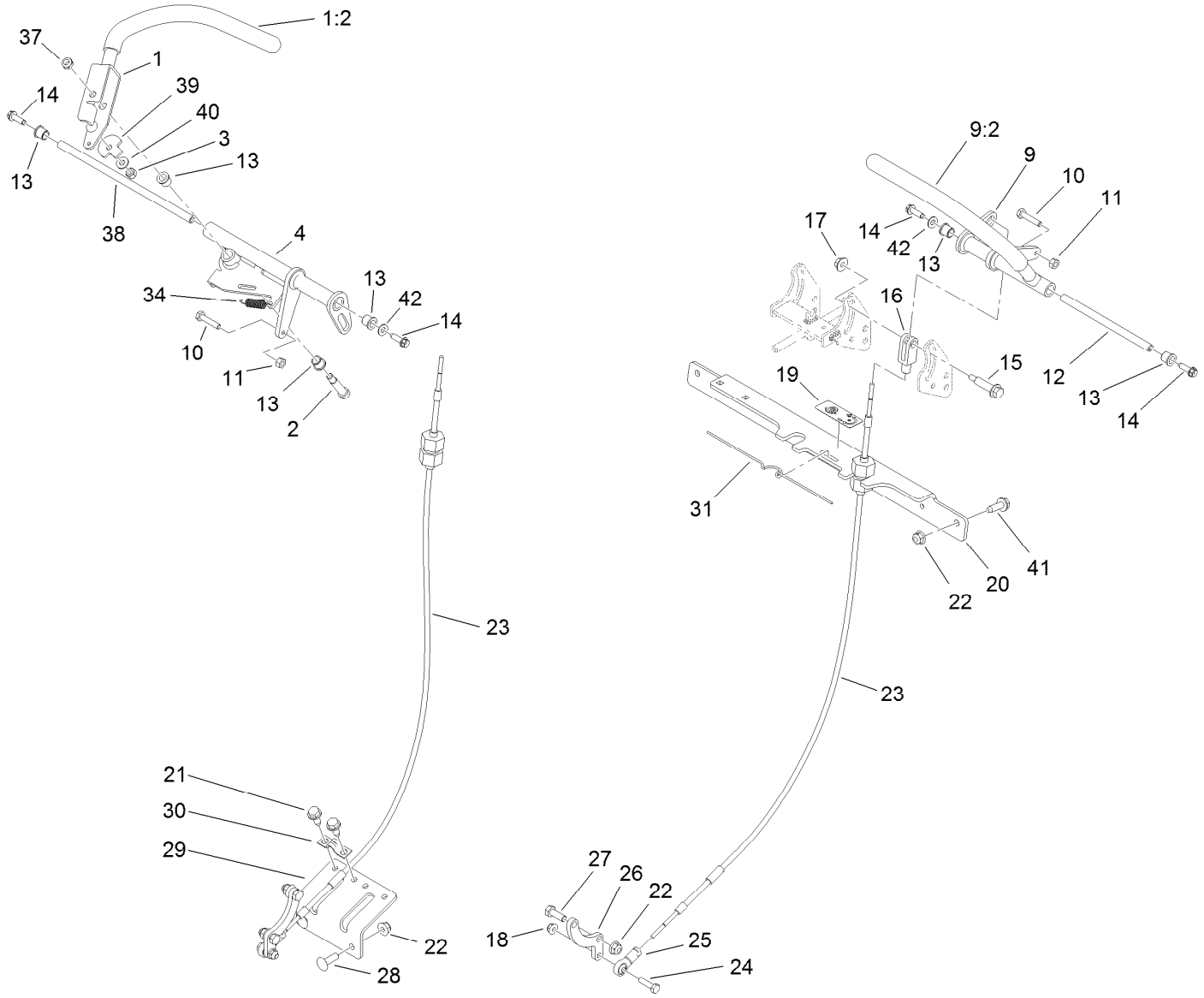

Motion Control Assembly

Ref.	Part Number	Qty.	Description
1	119-1887	1	RH Motion Lever ASM
1:2	119-0222	1	Grip
2	114-0239	1	Screw-HSH
3	3296-42	1	Nut-Lock, NI
4	117-6212	1	RH Motion Control ASM
9	119-1881	1	LH Motion Lever ASM
9:2	119-0222	1	Grip
10	114-0282	2	Screw-HH
11	3217-5	2	Nut-Hex
12	119-1885	1	Shaft-Pivot, Motion Control
13	103-9928	6	Bearing
14	80-0700	4	Screw-HH, Torx
15	119-1857	2	Screw-Shoulder, HHF
16	119-1869	2	Yoke-Female
17	114-3778	2	Nut-Lock, NI
18	104-7201	2	Nut-HF
19	119-1854	1	Decal-Tracking, Hydro
20	117-6239-01	1	Bracket-Cross

Ref.	Part Number	Qty.	Description
21	32144-70	4	Screw-HWHTF
22	104-8300	8	Nut-Flange, NI
23	117-6225	2	Cable ASM
24	321-6	2	Screw-HH
25	117-6222	2	Rod End-Ball Joint
26	117-6204	2	Arm-Control, Pump
27	322-4	4	Screw-HH
28	3230-10	2	Screw-CARR
29	117-6238-01	1	Bracket-Clamp, Cable
30	93-2279	2	Clamp-Cable
31	114-0433	1	Clip-Spring
34	114-0249	1	Spring-Extension
37	3296-47	1	Nut-Lock, NI
38	119-1886	1	Shaft-Pivot
39	114-0268	1	Cam-Lever
40	3256-22	1	Washer-Flat
41	3234-29	2	Screw-HHF
42	3256-1	2	Washer-Flat

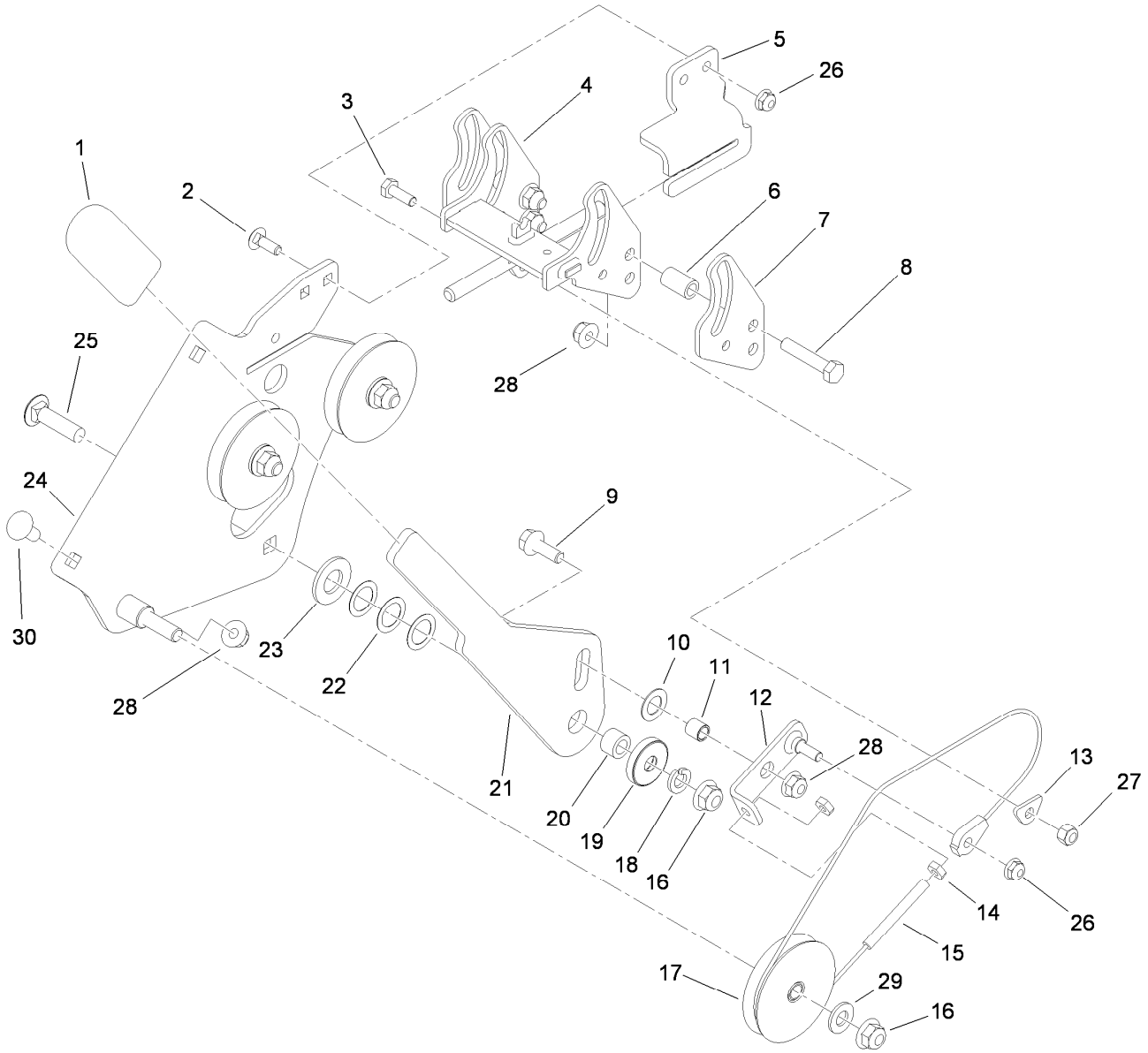

Speed Control Assembly

Ref.	Part Number	Qty.	Description
1	119-1846	1	Grip
2	3229-1	2	Bolt-CARR
3	321-4	1	Screw-HH
4	119-1828	1	Slider ASM
5	119-1833	1	Bracket-Slider
6	115-0826	4	Spacer-Idler
7	119-1820	2	Plate-Slider
8	322-8	4	Screw-HH
9	3234-29	1	Screw-HHF
10	36-4780	1	Washer-Plain
11	119-1867	1	Spacer
12	119-1853	1	Link ASM
13	119-1832	1	Washer-Clamp, Cable
14	3218-1	2	Nut-Jam
15	119-1856	1	Cable

Ref.	Part Number	Qty.	Description
16	104-8301	4	Nut-Flange, NI
17	5-2653	3	Pulley ASM
18	3253-21	1	Washer-Lock
19	119-1884	1	Retainer
20	115-4986	1	Spacer
21	119-1835	1	Handle-Control, Speed
22	108-2100	3	Washer-Spring, Curved
23	119-1868	1	Washer
24	119-1825	1	Speed Control Base ASM
25	3231-26	1	Screw-CARR
26	104-7201	3	Nut-HF
27	3296-42	1	Nut-Lock, NI
28	104-8300	7	Nut-Flange, NI
29	3256-24	3	Washer-Flat
30	3230-1	2	Bolt-CARR

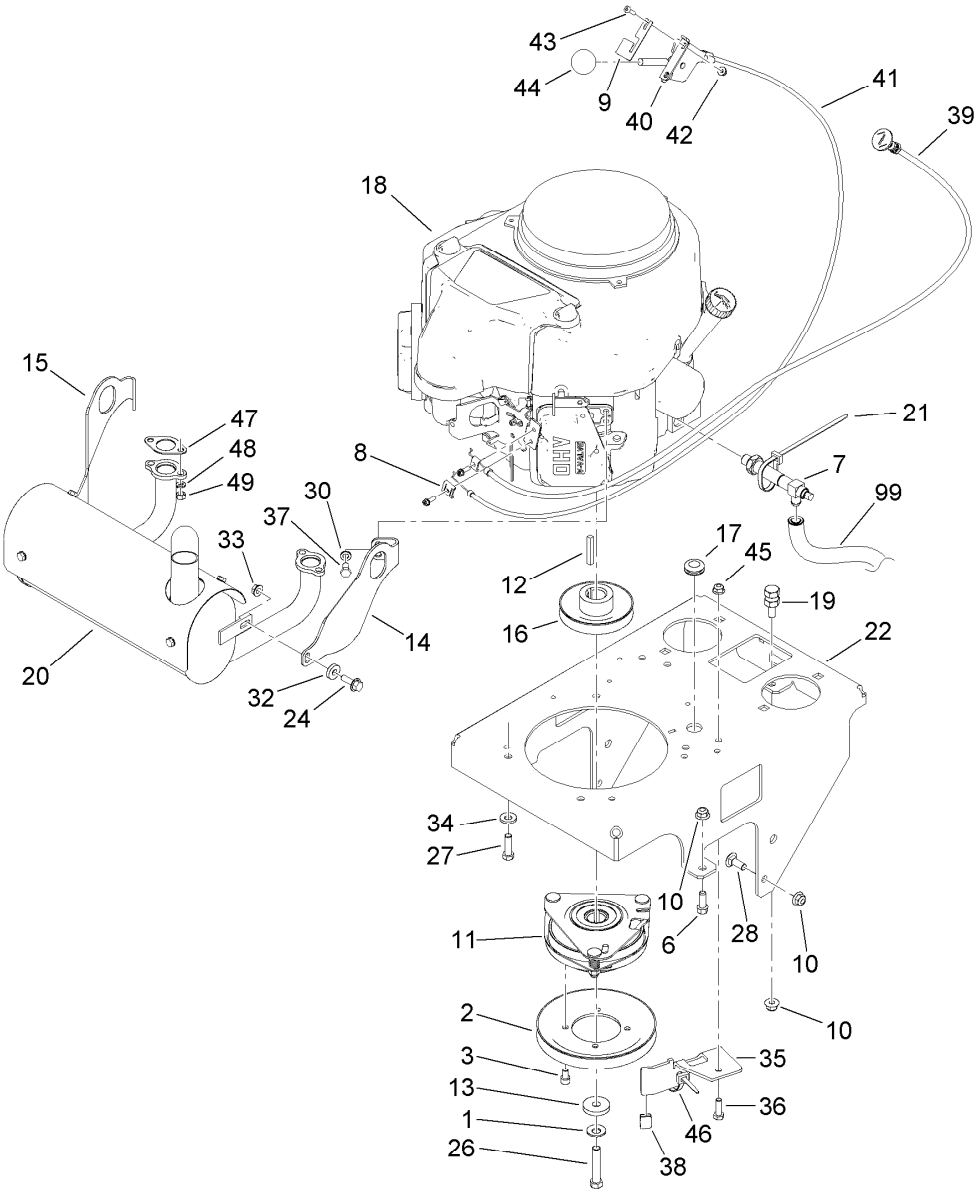

Engine Assembly

Ref.	Part Number	Qty.	Description
1	1-603610	1	Washer-Spring
2	119-0215	1	Pulley
3	119-0221	4	Screw-HSH
6	92-1624	2	Screw-HWH
7	116-2618	1	Valve-Drain, Oil
8	81-1690	1	Clamp-Cable
9	119-1883	1	Plate-Set, Throttle
10	104-8301	5	Nut-Flange, NI
11	119-0220	1	Clutch/Brake ASM
12	608006	1	Key-Square
13	107-4136	1	Washer
14	116-2353	1	Bracket-Muffler Mount, LH
15	116-2354	1	Bracket-Muffler Mount, RH
16	112-7067	1	Pulley
17	112-7069	1	Grommet
18		1	Engine-Kawasaki, Fs541V ●■
19	114-5866	1	Anchor-Spring, Short

Ref.	Part Number	Qty.	Description
20	116-2351	1	Muffler
21	3290-378	1	Tie-Cable
22	119-0170-01	1	Base-Engine
24	3234-29	2	Screw-HHF
26	3212-9	1	Screw-HH
27	323-7	4	Screw-HH
28	3231-2	2	Bolt-CARR
30	3253-4	4	Washer-Lock
32	104-7658	2	Spacer
33	32128-25	2	Nut-HF
34	98-5975	4	Washer-Belleville
35	117-9708-01	1	Bracket-Stop, PTO
36	322-5	1	Screw-HH
37	33114-016	4	Screw-HH
38	109-3765	1	Bumper
39	106-9962	1	Control-Choke, Push / Pull
40	110-5547	1	Lever-Control
41	119-1882	1	Cable-Control

● Not serviced separately

■ Obtain parts from www.kawpowerepc.com

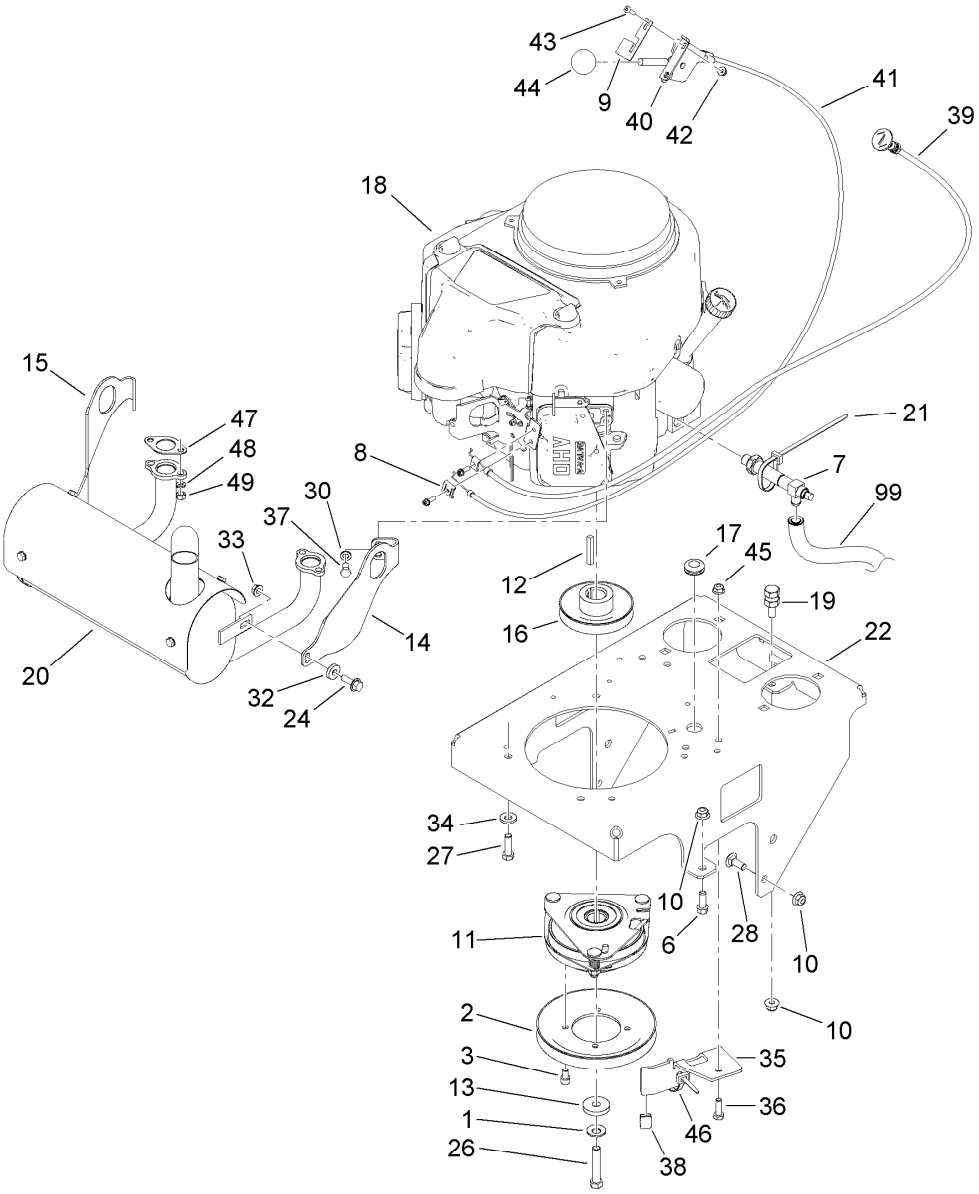

Engine Assembly (continued)

Ref.	Part Number	Qty.	Description
42	32128-17	2	Nut-Lock, Flange
43	110-0863	2	Screw-Torx
44	1-603175	1	Knob-Ball
45	104-8300	1	Nut-Flange, NI
46	3290-378	2	Tie-Cable

Ref.	Part Number	Qty.	Description
47	1-653313	2	Gasket-Exhaust
48	114-3550	4	Washer-Lock, Spring
49	114-3549	4	Nut
99	103-1964	1	Hose-Drain, Oil

● Not serviced separately

■ Obtain parts from www.kawpowerepc.com

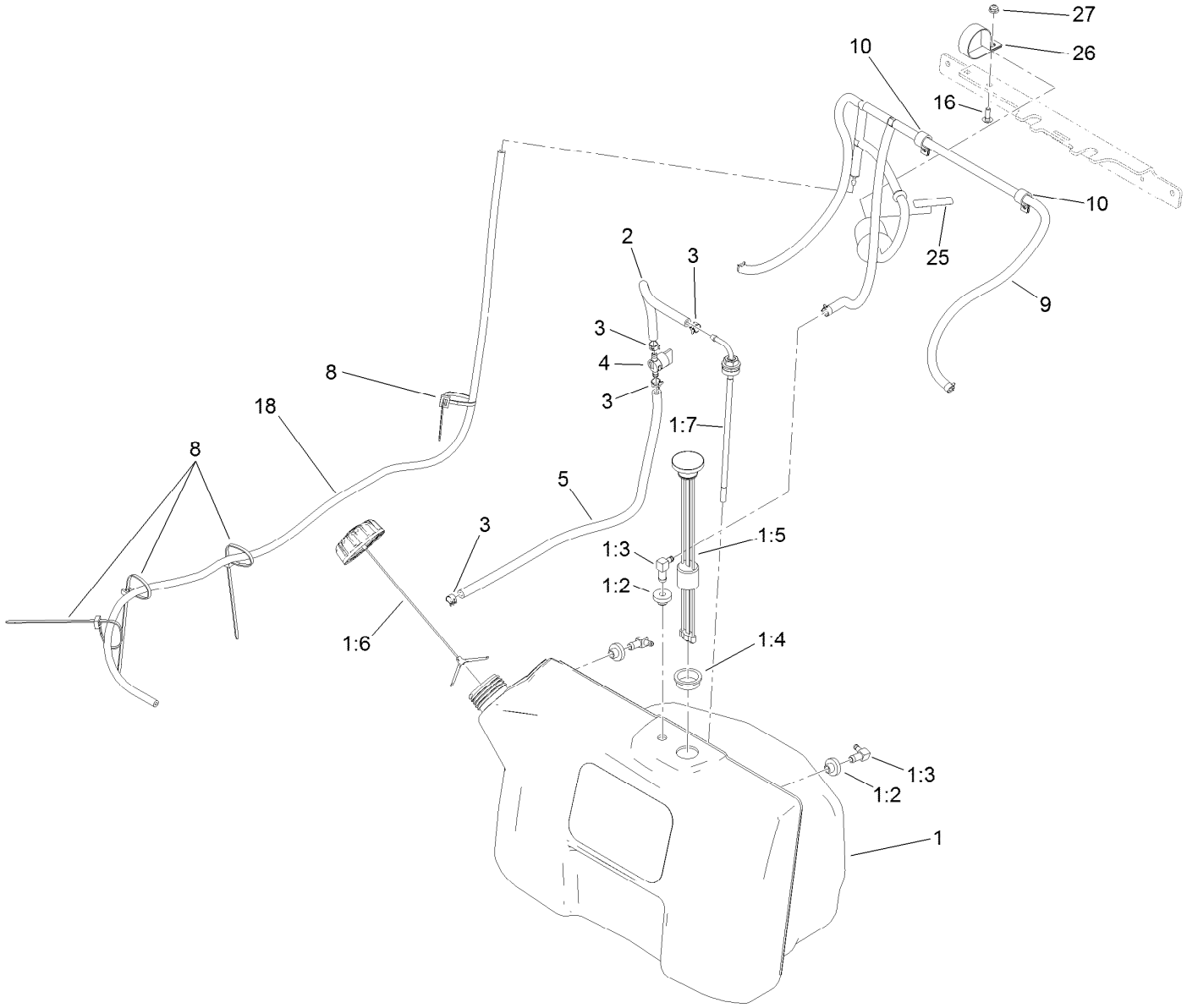

Fuel Tank Assembly

Ref.	Part Number	Qty.	Description
1	119-7340	1	Tank ASM
1:2	46-6560	3	Bushing
1:3	1-643172	3	Elbow-90 DEG
1:4	95-8972	1	Grommet
1:5	117-9719	1	Guage-Fuel
1:6	116-1704	1	Cap-Fuel, Ratcheting
1:7	116-3408	1	Fitting-Fuel, Bulkhead
2	109-0297	1	Hose-Fuel
3	2412-98	4	Clamp-Hose
4	1-603770	1	Valve-Fuel

Ref.	Part Number	Qty.	Description
5	109-0301	1	Hose-Fuel
8	3290-378	4	Tie-Cable
9		1	Vent Hose ASM ●
10	2412-87	2	Clamp-Cable
16	3229-1	1	Bolt-CARR
18	119-6073	1	Hose-Fuel
25	116-4769	1	Decal-Filter, Emissions
26	2412-96	1	Clamp-R
27	104-7201	1	Nut-HF

● Not serviced separately

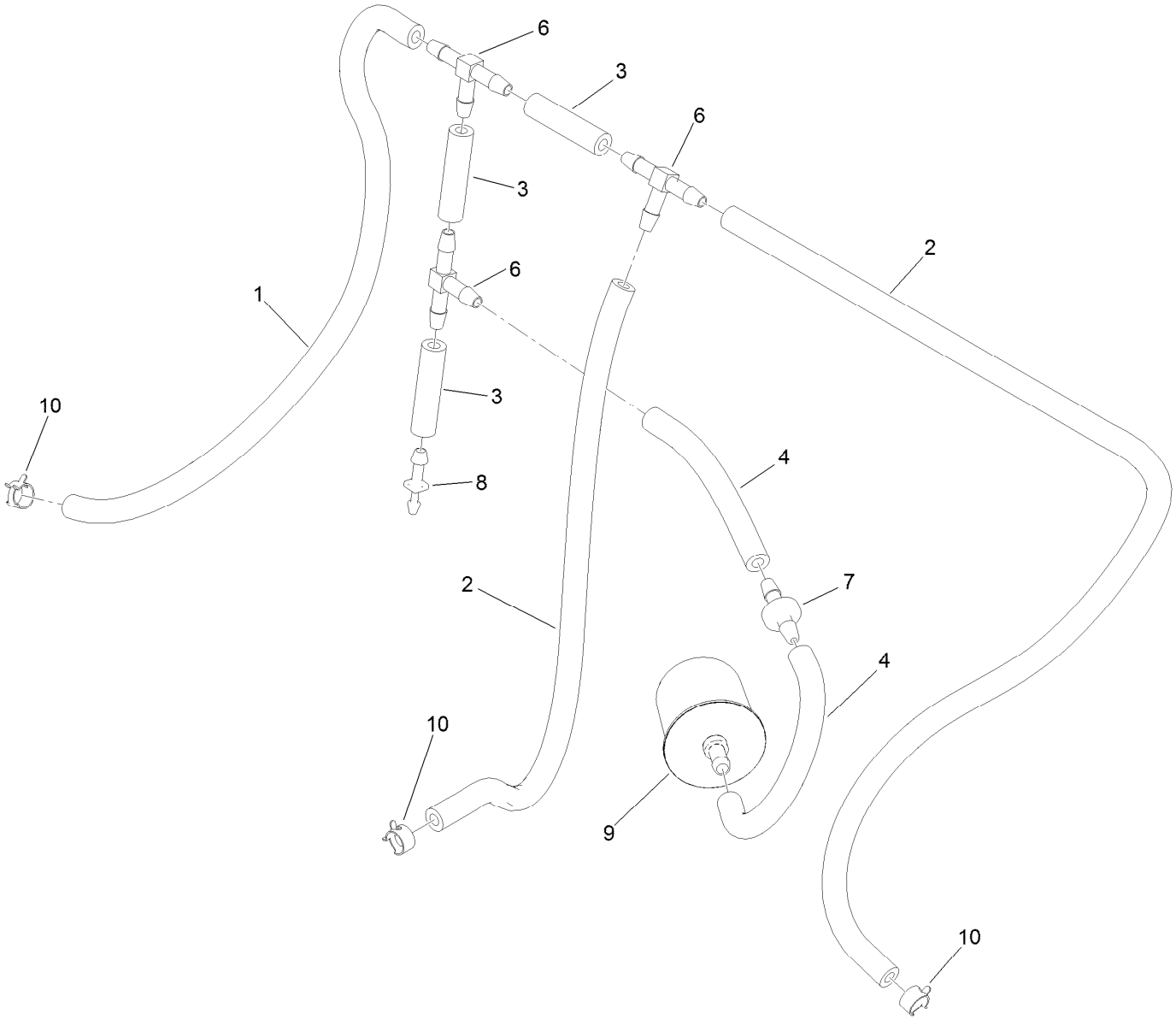

Vent Hose Assembly

Ref.	Part Number	Qty.	Description
1	109-3491	1	Hose-Fuel
2	109-0299	2	Hose-Fuel
3	119-7856	3	Hose-Fuel
4	109-0295	2	Hose-Fuel
6	99-5005	3	Fitting-Tee, Barbed
7	99-5000	1	Valve-Check, Fuel
8	106-8150	1	Fitting-Straight
9	120-2235	1	Filter-Fuel
10	2412-98	3	Clamp-Hose

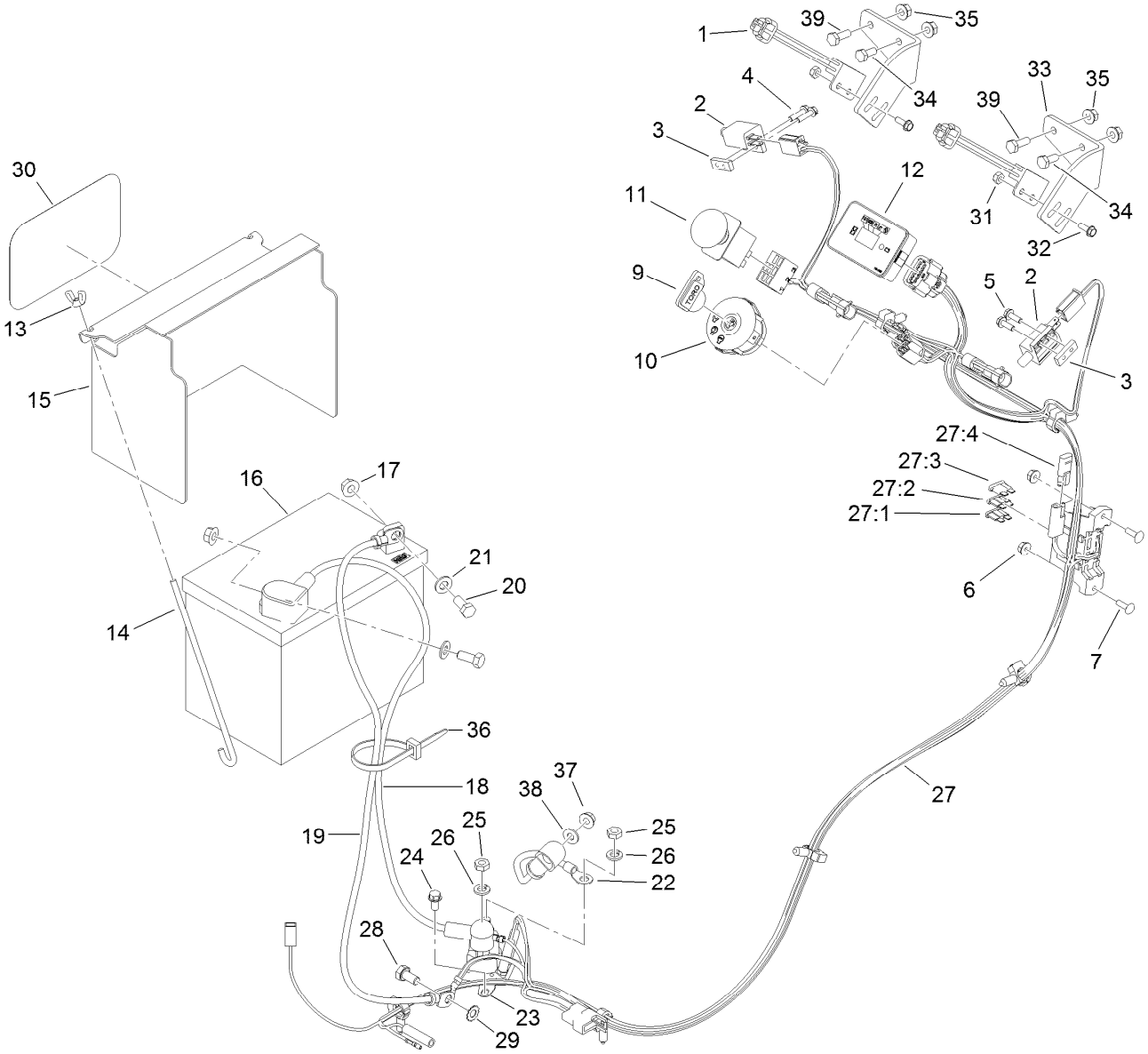

Electrical Assembly

Ref.	Part Number	Qty.	Description
1	105-0023	2	Switch-Proximity
2	1-513152	2	Switch-Closed, Normally
3	1-633181	2	Plate-Tapped
4	32105-13	2	Screw-HWH
5	32105-2	2	Screw-SHWH
6	32128-17	2	Nut-Lock, Flange
7	1-807533	2	Bolt-CARR
9	63-8360	1	Key-Ignition (W/Shield)
10	117-2222	1	Switch-Ignition
11	114-0279	1	Switch-PTO
12	117-3886	1	Module-Hour Meter
13	1-543792	2	Wingnut
14	1-633651	2	Bolt-Holddown
15	117-0543-01	1	Cover-Battery
16	104-8162	1	Battery
17	109-5715	2	Nut-HHF, Smooth
18	120-6442	1	Cable-Battery, Positive
19	103-0705	1	Cable-Ground, Negative
20	322-3	2	Screw-HH
21	3256-23	2	Washer-Flat
22	106-8268	1	Cable-Battery, Red

Ref.	Part Number	Qty.	Description
23	117-1197	1	Solenoid
24	32144-4	2	Screw-HWH
25	3220-2	2	Nut-Jam
26	3253-4	2	Washer-Lock
27	119-0181	1	Harness-Wire
27:1	109103	1	Fuse-Blade, 30 Amp
27:2	109102	1	Fuse-Blade, 25 Amp
27:3	218-578	1	Fuse-Blade, 10 Amp
27:4	116-0053	1	Cap-Plug
28	33114-016	1	Screw-HH
29	3255-8	1	Washer-Lock
30	68-3640	1	Decal
31	3296-2	4	Nut-Lock, NI
32	32105-23	4	Screw
33	119-8503-01	2	Bracket-Mount, Switch
34	321-3	2	Screw-HH
35	32128-32	4	Nut-HHF
36	3290-378	1	Tie-Cable
37	32128-33	1	Nut-HF
38	3256-22	1	Washer-Flat
39	321-4	2	Screw-HH

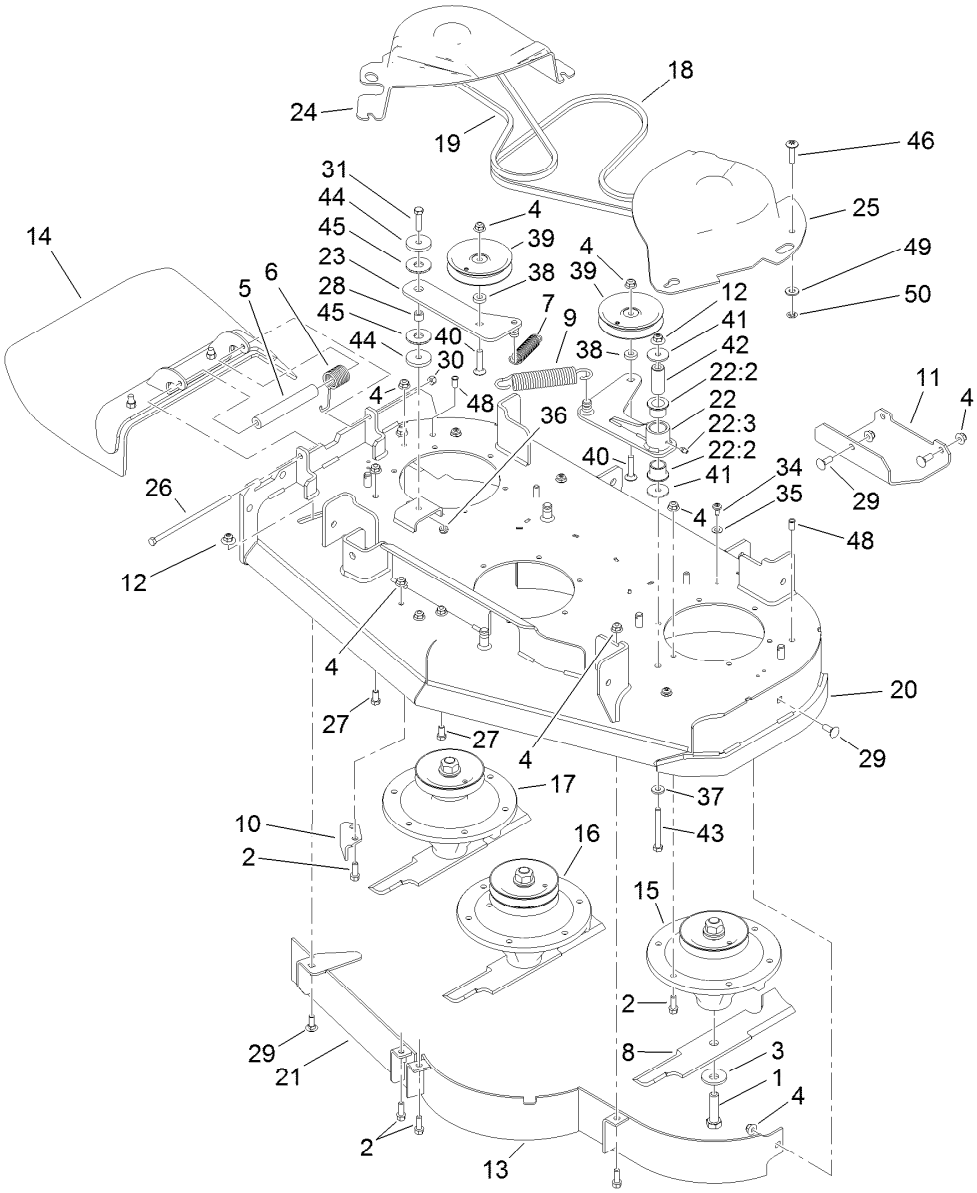

Deck Assembly

Ref.	Part Number	Qty.	Description
1	51-4060	3	Screw-Blade
2	92-1624	23	Screw-HWH
3	103-0865	3	Washer-Blade Bolt, Heavy
4	104-8301	31	Nut-Flange, NI
5	105-4622	1	Spacer
6	108-4052	1	Spring-Torsion
7	108-4056	1	Spring-Extension
8	108-4081-03	3	Blade-14 Inch (High Sail)
9	119-0394	1	Spring-Extension
10	108-7273-01	1	Baffle-Discharge
11	108-7282-01	1	Plate-Skid
12	109-6658	2	Nut-Flange, NI
13	110-6910-03	1	Baffle ASM
14	119-2347	1	Deflector ASM
15	117-7635	1	Spindle ASM
16	117-7636	1	Spindle ASM
17	117-7640	1	Spindle ASM
18	117-7648	1	Belt-V
19	117-7649	1	Belt-V
20	119-0161	1	Deck ASM
21	119-0163-03	1	Front Baffle ASM

Ref.	Part Number	Qty.	Description
22	119-0178	1	Idler Arm ASM
22:2	33-3090	2	Bushing
22:3	302-11	1	Fitting-Lube, 45 DEG
23	119-0171	1	Idler Arm ASM
24	119-1804	1	Cover-Belt, RH
25	119-1805	1	Cover-Belt, LH
26	322-50	1	Screw-HH
27	323-4	2	Screw-HH
28	1-413088	1	Bushing-Lever, Lift
29	3231-2	5	Bolt-CARR
30	3296-29	1	Nut-Lock, NI
31	323-8	1	Screw-HH
34	112-4004	5	Screw-Shoulder
35	73-0041	5	Washer-Thrust
36	3296-59	1	Nut-Lock, NI
37	71-9310	1	Spacer
38	5-0652	2	Spacer
39	93-1622	2	Pulley-Idler
40	3231-5	2	Screw-CARR
41	1-213069	2	Washer
42	119-0208	1	Spacer-Plain

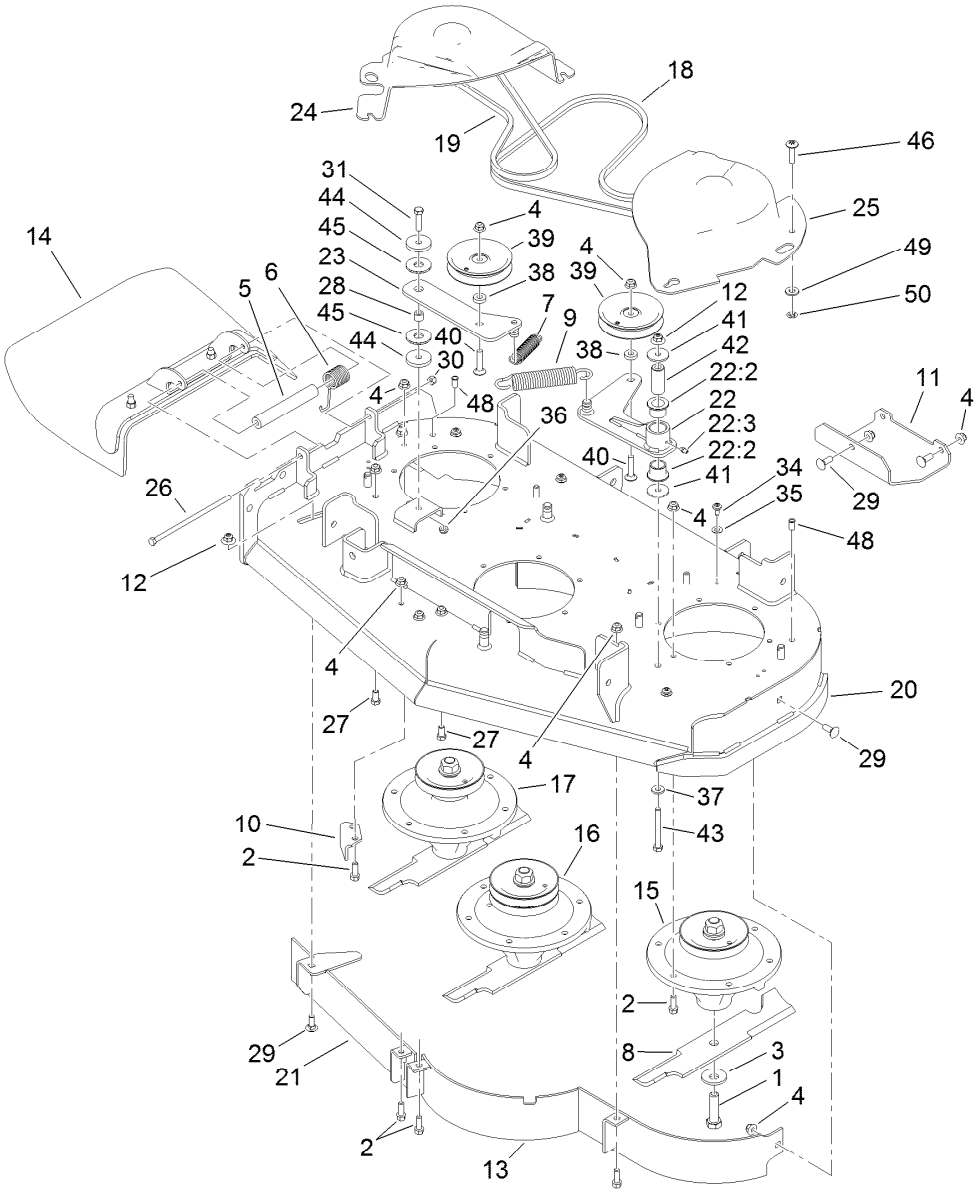

Deck Assembly (continued)

Ref.	Part Number	Qty.	Description
43	323-20	1	Screw-HH
44	110-9981	2	Washer-Plain
45	114-0463	2	Washer-Friction, Composite
46	32105-32	2	Screw-TTH

Ref.	Part Number	Qty.	Description
48	32148-6	2	Insert-Nut
49	3256-22	2	Washer-Flat
50	106-8737	2	Nut-Retainer

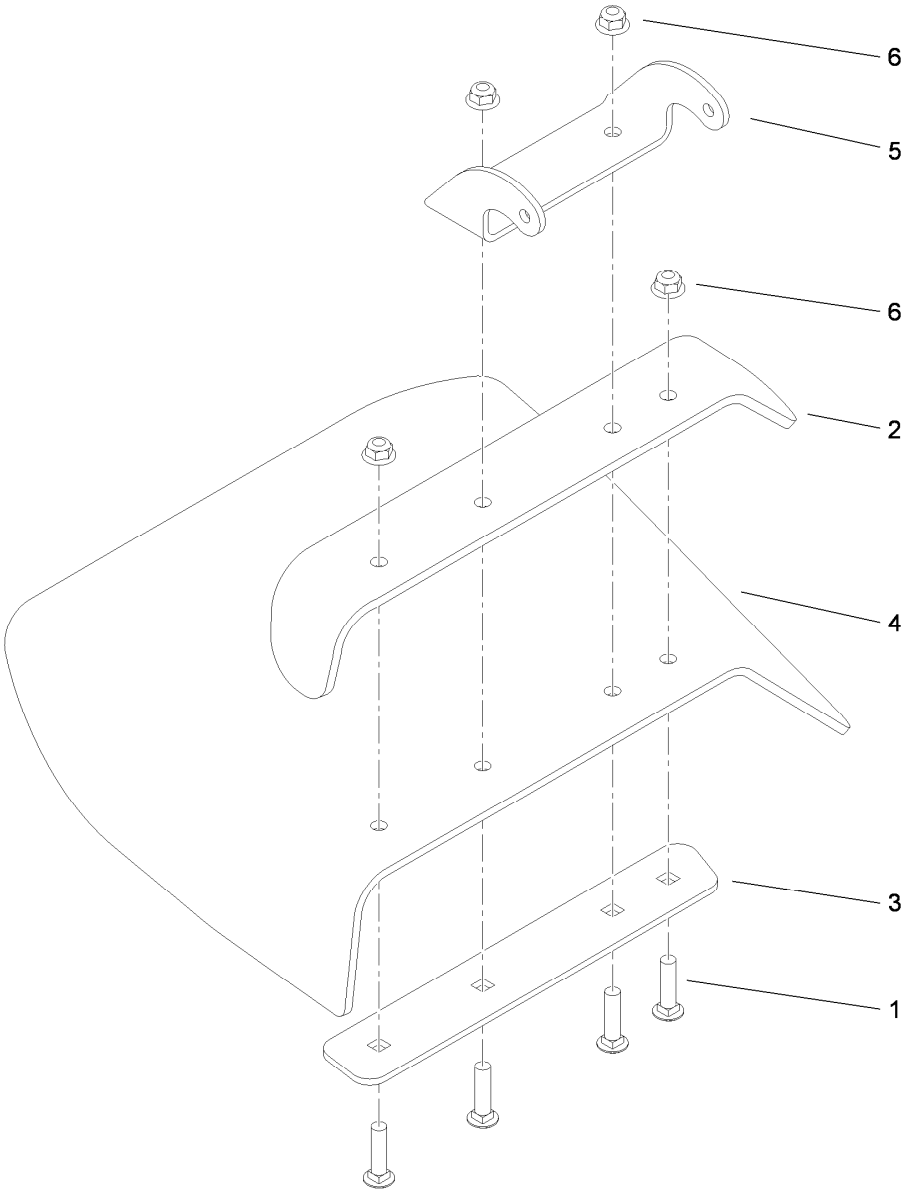

Deflector Assembly No. 119-2347

Ref.	Part Number	Qty.	Description
1	3231-4	4	Screw-CARR
2	110-0792-01	1	Deflector
3	110-0793-03	1	Strap-Discharge
4	119-2346	1	Deflector-Rubber
5	110-9923-01	1	Bracket-Mounting, Deflector
6	104-8301	4	Nut-Flange, NI

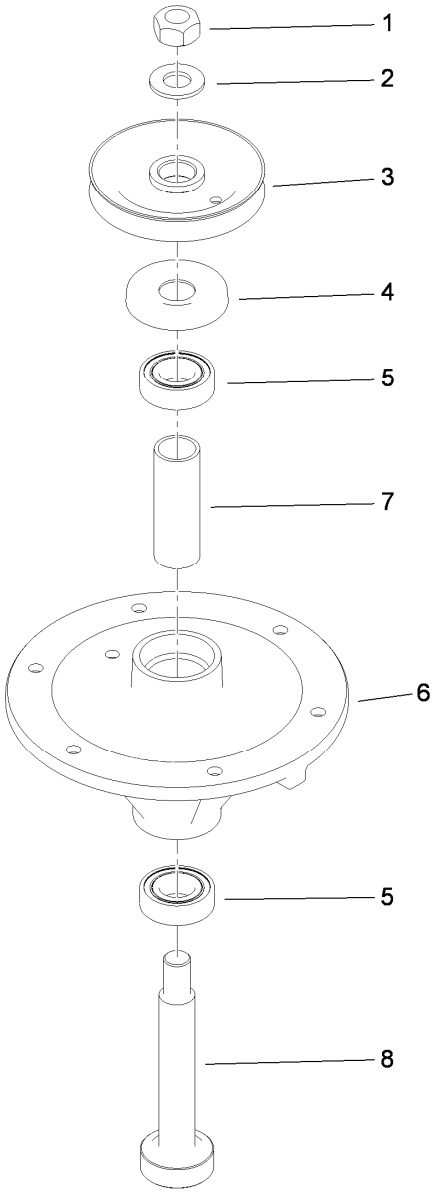

Spindle Assembly No. 117-7635

Ref.	*Part Number*	*Qty.*	*Description*
1	3219-7	1	Nut-Hex
2	7-4150	1	Washer
3	117-7615	1	Pulley ASM
4	106-0873	1	Shield-Bearing
5	116-0720	2	Bearing-Ball
6	108-6696	1	Housing-Spindle
7	110-0727	1	Spacer-Bearing
8	110-0726	1	Shaft-Spindle

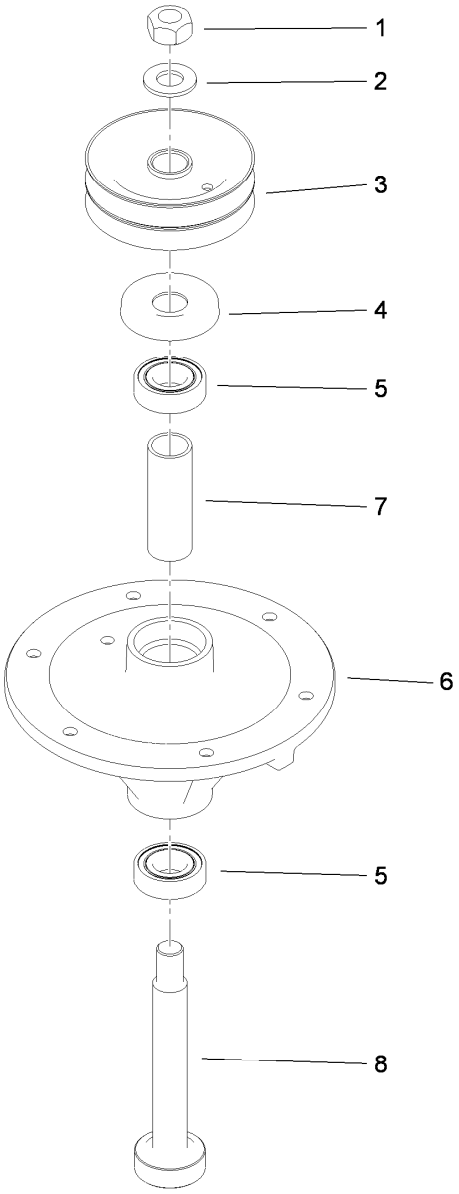

Spindle Assembly No. 117-7636

Ref.	*Part Number*	*Qty.*	*Description*
1	3219-7	1	Nut-Hex
2	7-4150	1	Washer
3	117-7616	1	Pulley ASM
4	106-0873	1	Shield-Bearing
5	116-0720	2	Bearing-Ball
6	108-6696	1	Housing-Spindle
7	110-0727	1	Spacer-Bearing
8	117-7626	1	Shaft-Spindle

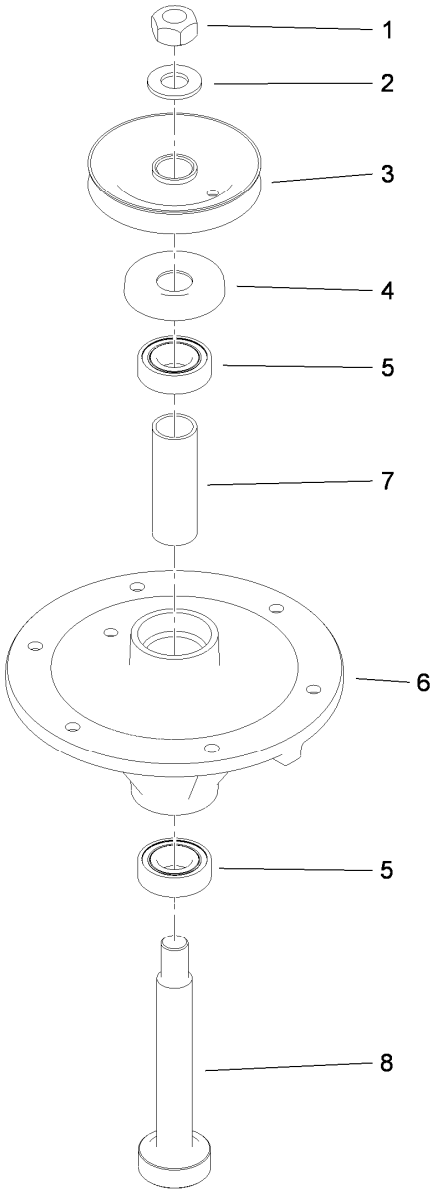

Spindle Assembly No. 117-7640

Ref.	*Part Number*	*Qty.*	*Description*
1	3219-7	1	Nut-Hex
2	7-4150	1	Washer
3	117-7617	1	Pulley ASM
4	106-0873	1	Shield-Bearing
5	116-0720	2	Bearing-Ball
6	108-6696	1	Housing-Spindle
7	110-0727	1	Spacer-Bearing
8	117-7626	1	Shaft-Spindle

Attachments and Accessories

For 74536TE GrandStand Mower With 102cm TURBO FORCE Cutting Unit

Product Name	Model/Part
40in Bagger Enhancement Kit	110-2025
40in Recycler Kit	110-2070
Turbo Plate Kit	110-6902
Light Kit	114-3505
Hypr-Oil 500 (quart)	114-4713
Hypr-Oil 500 (gallon)	114-4714
Hypr-Oil 500-5 (5 gallon)	114-4715
Blade-Recycler, 14in (6-pack)	114-4961
Blade-Low Flow, 14in (6-pack)	114-4962
Blade-Mid Flow, 14in (6-pack)	114-4963
Blade-High Flow, 14in (6-pack)	114-4964
Trash Bag Kit	117-0448
Weight Kit	117-3620
Striping Kit	117-8560
Operator-Controlled Discharge Chute Kit with Bag	117-8565
Soft Bag (3 Bushel)	30104
Spark Arrestor	98-9099

Notes:

Notes:

TORO®

Count on it.