FORM NO. 3315–326

TORO®

WHEEL HORSE® RECYCLER® RIDER

MODEL 70042 – 3900001 & UP
MODEL 70080 – 3900001 & UP
MODEL 70120 – 3900001 & UP



OPERATOR'S MANUAL

IMPORTANT: Read this manual carefully. It contains information about your personal safety. Become familiar with the controls and the proper use of the product before you use it.

FOR YOUR SAFETY

Two of the most potentially serious types of accidents involving power mowers are contact with the mower blade and overturning the rider/tractor. To minimize the possibility of having these types of accidents, read and follow these instructions. Also refer to the Safe Operation Practice in this Operator's Manual for other important safety information.

BLADE CONTACT

! DANGER! Mower Blades are Designed to CUT: therefore,

ALWAYS:

- Shut off engine and set parking brake.
- Remove ignition key.
- Allow moving parts to stop before dismounting, servicing, or cleaning unit.

NEVER:

- Perform ANY work on the mower with engine running.
- Mow with other people around, especially children.
- Leave mower unattended.



RIDER/TRACTOR STABILITY

Vehicle stability changes with conditions and is affected by:

- Slope angle and length/bumps/holes, etc.
- Slippery conditions (lawn moisture and length)
- Operator size and position/how loaded/ equipment used
- Speed/braking/steering changes
- Operator physical limitations/alertness

ALWAYS:

- Use good judgement when operating the rider/ tractor, especially on slopes.
- Maintain the vehicle in good operating condition.
- Be attentive to changing conditions affecting vehicle stability.

NEVER:

- Operate vehicle on extreme slopes.
- Operate vehicle across slopes.
- Abruptly change speed or direction.



TABLE OF CONTENTS

	Page
Safety Operation Requirements	3
Safety Decals and Instructions	7
Specifications	8
Loose Parts	9
Setting Up Instructions	10
Install Front Wheels	10
Install Steering Wheel Assembly	10
Install Seat	10
Before Operating	11
Activating and Charging Battery	11
Fill Crankcase With Oil	12
Fill Fuel Tank With Gasoline	12
Check Tire Pressure	13
Controls	13
Starting and Stopping Instructions	14
Operating Instructions	15
Break–In	15
Using Parking Brake	15
Adjusting Height–of–Cut	15
Operating Procedure	15
Side Discharging or Bagging	15
Grass Deflector	15
Recycler® Rider Tips	16
Maintenance Interval Chart	18
Maintenance	18

	Page
Grease Front Axle Spindles and Wheels	18
Lubricate Pivot Points	19
Check/Change Crankcase Oil	19
Servicing Air Cleaner	20
Replacing Spark Plug	21
Draining Gasoline From Fuel Tank	21
Adjusting Throttle/Choke Control	22
Adjusting Carburetor	22
Servicing Cutter Blade	23
Cleaning Underside of Mower Housing	24
Removing/Installing Cutting Unit	24
Replacing Blade Drive Belt	24
Adjusting Blade Drive Belt	25
Replacing Traction Drive Belt	25
Adjusting Front Wheel Alignment	25
Adjusting Brake	26
Leveling Cutting Unit	26
Adjusting Gear Shift Neutral Position	27
Checking Safety Interlock System	27
Preparing Mower For Storage	27
Wiring Diagram	29
Trouble Shooting	30
Maintenance Record	32
Slope Chart	33

These symbols mark important instructions relating to your personal safety. To avoid possibility of injury, read and follow such instructions carefully.

DANGER *This symbol warns of extreme immediate hazards which will result in severe personal injury or death if proper precautions are not taken.*

CAUTION *This symbol warns of a hazard or unsafe practice which can result in personal injury or death if proper precautions are not taken.*

When manual refers to left or right side of vehicle, it means your left or right when sitting in driver's seat.

SAFE OPERATING REQUIREMENTS – RIDING VEHICLES

WARNING: Engine exhaust contains carbon monoxide which is an odorless, deadly poison. Carbon monoxide is also known to the State of California to cause birth defects. Do not run engine indoors or in an enclosed area.

GENERAL

1. This machine is capable of amputating hands and feet and can throw objects that can cause injury and damage. KNOW the controls and how to stop machine quickly. READ THIS OPERATOR'S MANUAL and instructions furnished with attachments. Read, understand, and obey all safety messages appearing on the machine and in the operator's manual. LEARN from your operator's manual and from careful EXPERIENCE how to operate your equipment correctly. Know your machine's limitations.

2. Keep hands, feet, hair and loose clothing away from attachment discharge area, underside of mower deck or any moving parts while engine is running.

3. The use of drugs or alcohol while operating any equipment will place your safety in peril. Do not attempt operation of this machine while taking drugs or medication or while drinking alcoholic beverages.

©The Toro Company – 1992

SAFE OPERATING REQUIREMENTS

4. Only responsible persons with mature judgment and proper physical capabilities should be allowed to operate this machine, and only after instruction in the proper use of this equipment.

5. Do not allow children to operate machine.

6. Do not carry passengers.

7. The purpose of this machine is to perform work. This equipment is not intended for sport or recreation.

8. Do not mow when people or pets are around.

9. Clear work area of objects (wire, rocks, etc.) which might be picked up and thrown.

10. Take all possible precautions when leaving vehicle unattended; disengage power-take-off, lower attachments, shift into neutral, set parking brake, stop engine and remove key.

11. Watch out for traffic when crossing or near roadways.

12. Machine and attachments should be stopped and inspected for damage after striking a foreign object. Damage should be repaired before restarting and operating equipment.

13. Do not change engine governor settings or over-speed engine.

14. Wear appropriate protective clothing when operating equipment. Long pants and substantial footwear are essential. Do not operate with bare feet or open sandals.

15. Do not operate equipment unless properly seated with feet on footrests or pedals.

16. Keep your eyes and mind on your machine, attachment and the working area. Do not let other interests distract you.

17. Safety switches are intended to stop or prevent starting of engine to help prevent accidents. OPERATOR SHOULD TAKE PRECAUTIONS AND NOT RELY ENTIRELY ON SAFETY SWITCH(ES). Check switches for proper operation before each use.

18. Care should be used not to touch equipment or attachment parts which may be hot from operation. Muffler and nearby areas may exceed 150° F. Allow cooling to occur before attempting to maintain, adjust or service.

19. Use of stereo headphones, ear protection or other sound altering/dampening devices may limit your ability to hear warning sounds (horns, shouts, etc.).

FUEL / FIRE PRECAUTIONS

20. Handle gasoline with care. It is highly flammable.

21. Use approved gasoline container. Place container out of reach of children.

22. Use gasoline only as a fuel — never as a cleaner.

23. Never remove fuel cap or add gasoline to a running or hot engine, or an engine that has not been allowed to cool for several minutes after running.

24. Never fill fuel tank indoors. Wipe up spilled gasoline.

25. Open doors if engine is run in garage — exhaust fumes are dangerous. Do not run engine indoors.

26. Do not fill machine with gasoline while smoking or when near open flame or sparks.

27. Never store equipment with gasoline in the tank inside a building where fumes may reach an open flame or spark.

28. Allow engine to cool before storing in any enclosure.

29. To reduce fire hazard, keep engine and attachments free of grass, leaves or excessive grease.

30. Battery acid is a poison and can cause burn. Avoid contact with skin, eyes and clothes and protect your face, eyes and clothing when working around the battery.

31. Battery gases can explode. Keep cigarette, sparks and flames away from battery.

EQUIPMENT USE AND OPERATION

32. It is recommended that first operation of equipment be done at a slow speed with attachment disengaged. Continue this practice until operator is thoroughly familiar with the controls and has developed operating skills.

33. Disengage all attachment clutches, set parking brake and shift into neutral before attempting to start engine.

34. Disengage power to attachment(s), set parking brake and stop engine before leaving operator position.

35. Disengage power to attachment(s) and stop engine before making any repairs or adjustments.

36. Disengage power to attachment(s) when transporting or not in use.

37. Disengage attachment clutch before attempting to remove the mower from a hole or other obstruction.

SAFE OPERATING REQUIREMENTS

38. Disengage power to attachment(s) before backing. Do not mow in reverse unless absolutely necessary and then only after careful observation of the entire area behind the machine.

39. LOOK behind machine to make sure the area is clear before placing the machine in reverse and continue looking behind while backing.

40. Always back up loading ramps and tilt bed trailers.

41. The parking brake is designed to hold machine in place at rest, with engine off. Parking brake will not restrain machine with engine running and transaxle engaged.

STABILITY / TIP OVER / TRACTION

42. Know the terrain on which you are operating your equipment. There are areas on which your equipment cannot be safely operated.

43. Avoid operating equipment on hillsides, slopes or rough terrain. DO NOT operate machine on hillsides or slopes exceeding 15° (27% grade). If safety is in doubt STAY OFF THE SLOPE.

44. Reduce speed and exercise extreme caution on slopes above 10° (18% grade) to prevent tipping or loss of control. Never mow uphill on these slopes — mow downhill only. If a steep hill must be ascended, back up the hill, and drive forward down the hill, keeping machine in gear. If necessary to turn on hill, always turn downhill.

45. Mow up and down the face of slopes greater than 5° (9% grade), never across the face. Be especially cautious when changing directions on all slopes.

46. Operate your machine smoothly and at a ground speed slow enough to ensure complete control at all times. Avoid erratic operation and excessive speed.

47. Sharp turns on any terrain may cause loss of control. Reduce speed and use caution when making sharp turns.

48. Do not stop or start suddenly when going uphill or downhill. Avoid uphill starts. If machine is stopped going up a slope, turn the attachment off and back slowly down the slope keeping the machine in gear. Do not stop or change gears (speed) on slopes.

49. Know the terrain on which you are working. Find hidden obstacles by walking through and inspecting the area prior to operating your equipment in that area. Plainly mark obstacles, such as rocks, ruts or holes and stay well clear of these obstacles when operating.

50. While operating, stay alert for holes, rocks or roots, which may cause damage to equipment or upset. Keep at least 3 ft. away from drop-offs, ditches, creeks, culverts, washouts and public highways.

51. Exercise care when mowing around a fixed object to prevent the equipment or attachment from striking the object. When mowing, never deliberately run over any foreign object.

52. Areas wet with dew, rain or snow will be more slippery than when dry. Areas covered with loose gravel are more slippery than firm, dry ground. Greater stopping distances are required in these slippery areas.

53. Learn to expect changes in operating conditions. Adding or removing attachments or weight to your equipment will make your machine perform differently. Rain, snow, loose gravel, wet grass, etc., change the tractive conditions of the terrain, requiring changes in your operating technique, which may include a decision not to operate on that terrain.

54. Use care when pulling loads or using heavy equipment.

A. Use only approved drawbar hitch points.

B. Limit loads to those you can safely control.

C. Do not turn sharply. Use care when backing.

D. Use counterweight(s) or wheel weights when suggested in operator's manual.

ATTACHMENT USE

55. When using attachments never direct discharge of material toward bystanders nor allow anyone near vehicle while in operation.

56. When using machine with mower:

A. Mow only in daylight or in good artificial light.

B. Never make a cutting height adjustment while engine is running if operator must dismount to do so.

C. Shut engine off and wait for all moving parts to stop before unclogging chute.

D. Check blade mounting bolts for proper tightness at frequent intervals.

57. Keep hands and feet away from rotating blade(s) underneath mower deck. Never place foot on ground when mower is engaged or when unit is in motion.

58. DO NOT operate mower attachment without the chute deflector or complete bagger in place.

59. Exercise care while maneuvering with grass catcher. Front to rear stability may change.

SAFE OPERATING REQUIREMENTS

MAINTENANCE

60. Keep all nuts, bolts, fasteners and screws tight to be sure equipment is in safe working condition and check them frequently. Repair or replace worn, damaged, distorted or broken parts as needed.

61. Keep vehicle and attachments in good operating condition and keep safety devices in place and working.

62. Under normal usage, grass catcher bag material is subject to deterioration and wear. It should be checked frequently to determine need for bag replacement.

63. Use only genuine Toro Wheel Horse replacement parts to ensure that original standards are maintained.

64. Shields, deflectors, switches, decals, blade controls and other safety devices must be in their proper position and functional.

65. Do not operate without muffler or tamper with the exhaust system. Damaged mufflers or spark arresters can create a fire hazard. Periodically inspect and replace if necessary.

66. If equipment begins to vibrate abnormally, disengage power to attachments and stop engine at once. Repair any damage before starting or continuing operation.

67. Periodically inspect all shafts, levers, friction devices and other moving parts subject to wear. Make required adjustment or replace these parts if damaged, distorted or broken, or as soon as wear affects the normal operation of the vehicle or attachment. DO NOT operate equipment that is not functioning properly.

OWNER REGISTRATION AND WARRANTY

Service and warranty assurance is as important to Toro Wheel Horse as it is to you, the owner. To facilitate warranty service at an Authorized Toro Wheel Horse Dealer, Toro Wheel Horse requires factory registration. A registration card is supplied with each new rider and attachment. **Either you or your dealer must fill in required information and mail the card to Toro Wheel Horse.**

Toro Wheel Horse Limited Warranty Statement is on a "hang tag" in the loose parts bag. This statement describes what items are covered by the Toro Wheel Horse Limited Warranty, your rights and obligations, and procedure to follow to obtain warranty service. Please familiarize yourself with the warranty statement. **All of us at Toro Wheel Horse want you to be satisfied with your Toro Wheel Horse rider; please don't hesitate to contact us for assistance.**

PARTS MANUAL

A separate parts manual is available for your Toro Wheel Horse equipment. To obtain a parts manual, write to:

The Toro Company
8111 Lyndale Avenue South
Bloomington, MN 55420–1196
Attn: Publications Dept.

BE SURE TO INCLUDE MODEL NUMBER AND SERIAL NUMBER OF EQUIPMENT.

SAFETY DECALS AND INSTRUCTIONS

Safety decals and instructions are easily visible to the operator and are located near any area of potential danger. Replace any decal that is damaged or lost.

ON DEFLECTOR (Part No. 54-9220)



IN FRONT OF SEAT (Part No. 76-1320)



IN FRONT OF SEAT (Part No. 76-1310)

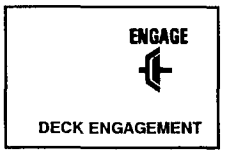

IN FRONT OF SEAT (Part No. 76-1300)

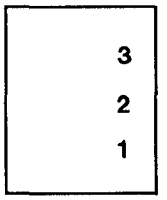

IN FRONT OF SEAT (Part No. 76-1290)

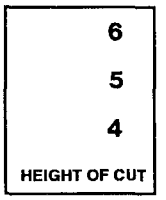

ON LEFT SIDE OF DECK (Part No. 66-1340)



ON REAR OF STEERING TOWER (Part No. 56-7810)

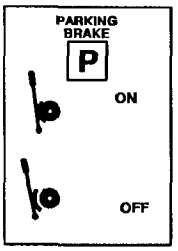

ON REAR OF STEERING TOWER (Part No. 79-0370)

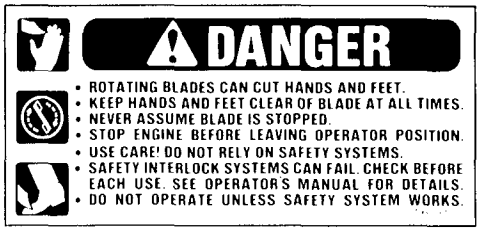

ON FRONT OF STEERING TOWER (Part No. 26-4830)

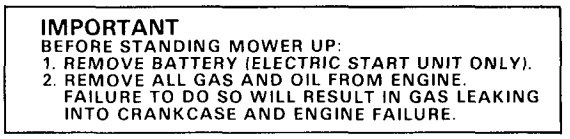

ON RIGHT SIDE OF SEAT (Part No. 92-1751)

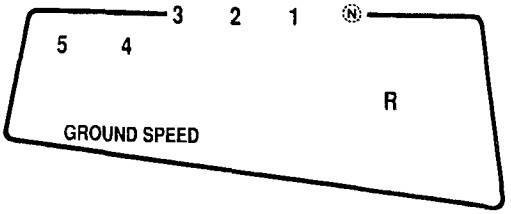

IN FRONT OF SEAT (Part No. 76-1260)



UNDER GRASS DEFLECTOR (Part No. 68-3650)



ON FLOOR PANEL (Part No. 76-1090)

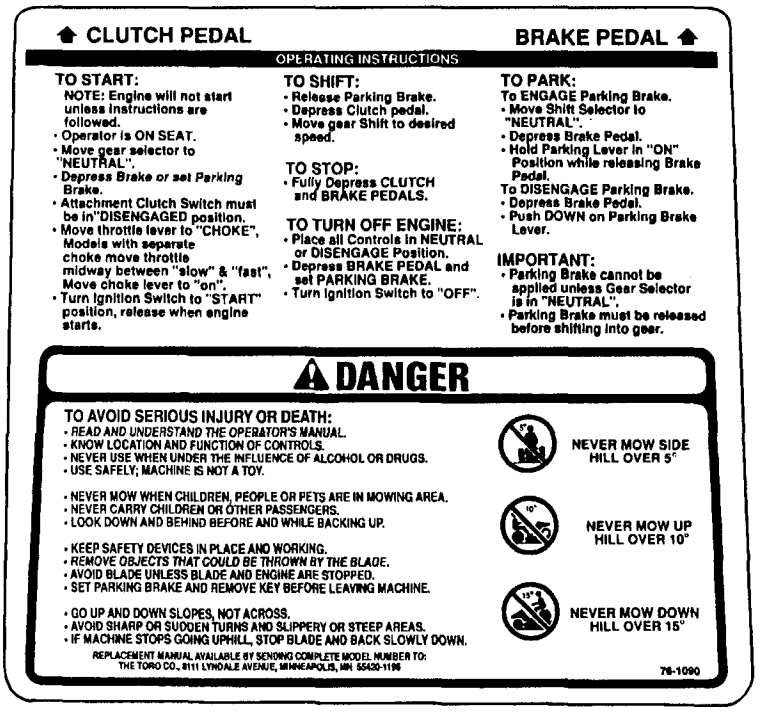

SPECIFICATIONS

832 REAR ENGINE RIDER – ELECTRIC START, MODEL 70042
1032 REAR ENGINE RIDER – ELECTRIC START, MODEL 70080
1232 REAR ENGINE RIDER – ELECTRIC START, MODEL 70120

8-32 — Briggs & Stratton Engine (70042): Electric start with alternator, four cycle engine, has output of 8 hp (6 KW) @ 3600 rpm and 12.7 ft/lb (17.2 N·m) torque @ 2500 rpm. Displacement is 19.44 cubic inches (318.6 cc). Crankcase oil capacity is 36 ounces (1.065 l) and fuel tank capacity is 5 quarts (4.73 l). Correct spark plug is a Champion RJ-19LM or equivalent resistor type. Recommended spark plug air gap is 0.030 of an inch (0.762 mm).

10-32 — Briggs & Stratton Engine (70080): IC Series, electric start with alternator, four cycle engine, has output of 10.5 hp (7.5 KW) @ 3600 rpm and 14.8 ft/lb (20 N·m) torque @ 2500 rpm. Displacement is 24.36 cubic inches (400 cc). Crankcase oil capacity is 48 ounces (1.42 l) and fuel tank capacity is 5 quarts (4.73 l). Correct spark plug is a Champion RJ-19 LM or equivalent resistor type. Recommended spark plug air gap is 0.030 of an inch (0.762 mm).

12-32 — Briggs & Stratton Engine (70120): IC Quiet Series, electric start with alternator, four cycle engine, has output of 12.5 hp (9.0 KW) @ 3600 rpm and 20 ft/lb (38.5 N·m) torque @ 2800 rpm. Displacement is 28.40 cubic inches (465 cc). Crankcase oil capacity is 48 ounces (1.42 l) and fuel tank capacity is 5 quarts (4.73 l). Correct spark plug is a Champion RJ-19 LM or equivalent resistor type. Recommended spark plug air gap is 0.030 of an inch (0.762 mm).

Mower Housing: Full floating, front to rear, side to side. 13 gauge (2.64 mm) stamped steel housing with kickers, discharge cover, ring and side discharge grass deflector. Deck diameter is 31.75 inches (.8 m). Cast spindle housing with shaft is supported by two double seal ball bearings. Blade spindle pulley is driven by "A" section V-belt from engine crankshaft.

Cutter Blade: Single blade is 31.35 inches (0.796 m) long, made of one piece hardened 7 gauge (2.72 mm) carbon steel.

Blade Tip Speed: 17,000 ft./min (86.36 m/s) @ 3300 engine rpm. Height–of–Cut Range: adjustable to one of six approximate settings from 1-1/2 inches to 4 inches (38 to 101 mm).

Transaxle: Transaxle fully enclosed, permanently lubricated with five speeds forward and one reverse. Axle shafts are 3/4 inch (19 mm) dia. with (2) zerks on the bottom.

Wheels and Tires: The front 11 x 4.00-5 and the rear 15 x 6.00-6 tubeless, pneumatic turf tires are installed on demountable stamped steel wheels.

Ground Speed @ 3300 Engine rpm:

1st gear	— 1.57 mph (2.52 km/hr)
2nd gear	— 2.35 mph (3.78 km/hr)
3rd gear	— 3.0 mph (4.82 km/hr)
4th gear	— 3.7 mph (5.95 km/hr)
5th gear	— 5.0 mph (8.04 km/hr)
Rev. gear	— 1.71 mph (2.73 km/hr)

Steering: 4 spoke, dished steering wheel on pinion and sector gear to tie rods controlling wheels 5.1:1 reduction. Turning diameter of approximately 3.3 ft. (1 m).

Engine Controls: Throttle control with CHOKE, OPERATE, HOT RESTART and IDLE positions. Key switch with OFF, RUN and START positions. Both controls mounted in convenient positions.

Gear Selector Control: Hand operated lever on right side of operator with in line shifting pattern.

Traction Clutch: Foot operated pedal on left side. Depressing pedal disengages idler pulley.

Brake Pedal: Foot operated pedal on right side. Depressing pedal engages caliper on 2-1/2 inch (64 mm) diameter disc. Located on the transaxle.

Parking Brake Control: Hand operated lever on rear of steering tower which locks brake pedal and/or clutch pedal.

Cutter Blade Control: Hand operated lever to right of operator releases blade brake and engages clutch.

Height-Of-Cut Control Lever: Hand operated lever to left of operator. Height–of–cut selection is variable in six increments from approx. 1-1/2 to 4 inches (38 to 102 mm).

General Dimensions:

Wheel Base	— 45 in (1.14 m)
Tread Width	— 30 in (.76 m) front outside to outside
Length	— 60 in (1.52 m)
Height	— 38 in (.97 m)
Width	— 40 in (1.02 m)
Weight	— 360 lb (163.30 kg) 8-32 E (Model 70042)
	— 365 lb (164.54 kg) 10-32 E (Model 70080)
	— 370 lb (167.84 kg) 12-32 E (Model 70120)

SPECIFICATIONS

Safety Features: Meets or exceeds ANSI/OPEI B71.1 — 1990 safety specifications.
Traction drive, blade drive and seat interlock.
Full foot rests.
Convenient, easy to operate controls.
Automatic blade brake.
Stable-Wide track and low center of gravity.

Optional Accessories Attachments:
Easy Empty Grass Catcher, Model #79095
Twin Bagger, Model #79085.

LOOSE PARTS

Note: Carefully remove rider and other parts from carton. Use chart below to ensure all parts have been shipped.

DESCRIPTION	QTY.	USE
Seat	1	Install Seat, page 10.
Wire Tie	1	
Clamp	1	
Capscrew (8 hp model only)	4	
Washer (8 hp model only)	4	
Seat Spacer (10 & 12.5 hp models only)	4	
Locknut (10 & 12.5 hp models only)	4	
Front Wheel Assembly	2	Install Front Wheels, page 10.
Flat Washer	2	
Hub Cap	2	
Cotter Pin	2	
Steering Wheel	1	Install Steering Wheel Assembly, page 10.
Roll Pin	1	
Steering Shaft Cover	1	
Key	1	Use in Ignition Switch.
Capscrew	2	Secure battery cables to battery, page 11.
Wing Nut	2	
Operator's Manual	1	Read manual before operating rider.
Registration Card	1	Fill out and mail to Toro.
Hang Tag	1	Read for Warranty Information.

SETTING UP INSTRUCTIONS

INSTALL FRONT WHEELS

Note: Grease axle shafts before installing wheels.

1. Install wheel onto axle.

2. Mount flat washer onto axle, insert cotter pin and open pin ends with pliers (Fig. 1).

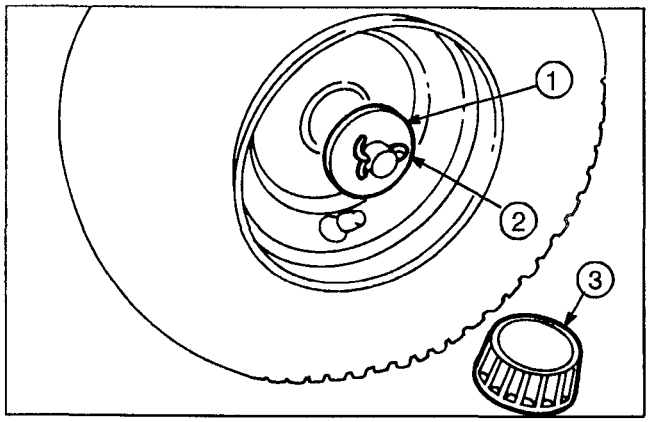

Figure 1

1. Flat washer *2. Cotter pin* *3. Hub cap*

3. Install hub caps.

4. Repeat steps 1-3 on opposite side.

5. Check front and rear tires for 12 psi (82.7 kPa) inflation.

6. Lubricate both front wheels with No. 2 general purpose grease. Pump grease gun until grease comes through bearings. Wipe up any excess grease.

INSTALL STEERING WHEEL ASSEMBLY

1. Position wheels in straight ahead direction and slide steering shaft cover over steering shaft.

2. Slip steering wheel over shaft and line the steering wheel mount hole with the shaft mounting hole (Fig. 2). Toro logo should be readable from operator's position.

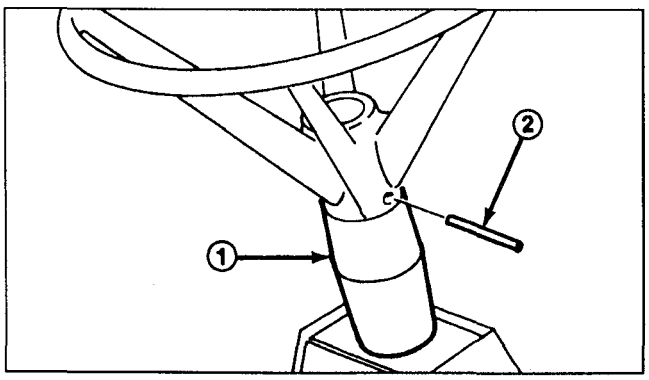

Figure 2

1. Steering shaft cover *2. Roll pin*

3. Insert a drift punch partially through the holes to maintain alignment and insert the roll pin in from the opposite side.

4. Drive the roll pin in until it is flush with the outside of the wheel (Fig. 2).

INSTALL SEAT (Model 832 only)

1. Position seat onto seat base. Route seat switch wire thru slot in seat (Fig. 3).

2. Mount seat to seat base with (3) three bolts and washers (Fig. 3).

3. Slide wire clamp over seat switch wire (Fig. 3).

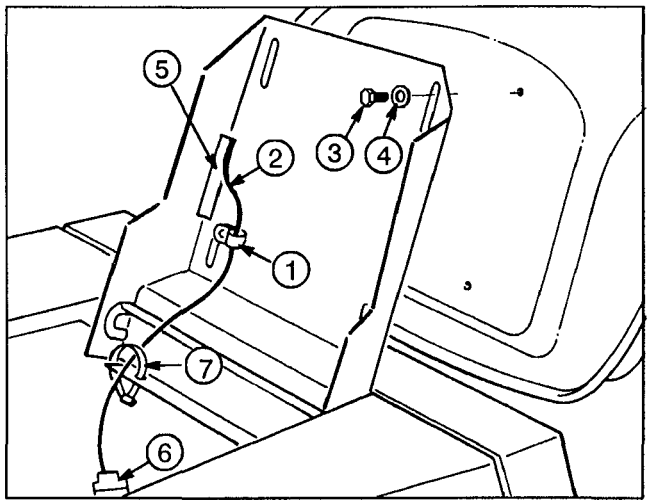

Model 832 only

Figure 3

1. Wire clamp
2. Seat switch wire
3. Bolt
4. Washer
5. Seat switch slot
6. Seat switch connector
7. Wire tie

4. Tighten wire clamp and seat to seat base with remaining bolt and washer (Fig. 3).

Note: Seat may be adjusted for operator comfort by positioning seat as desired in seat base slots.

5. Tighten all bolts.

6. Insert seat switch connector into wire harness connector.

7. Secure wire harness to front of seat base with wire tie.

INSTALL SEAT (Model 1032 & 1232 only)

1. Thread (4) seat spacers into bottom of seat (Fig. 4).

2. Position seat onto seat base, inserting seat switch cable thru slot and spacer studs thru mounting holes (Fig. 4).

3. Slide wire clamp over seat switch wire (Fig. 4).

4. Using left front spacer stud, loosely secure wire clamp and seat to seat base with a locknut (Fig. 4).

SETTING UP INSTRUCTIONS

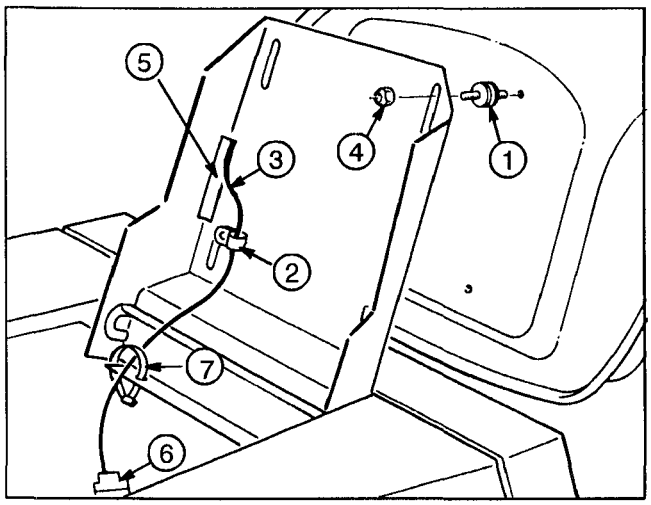

(Models 1032 & 1232)

Figure 4

1. *Seat spacers*
2. *Wire clamp*
3. *Seat switch wire*
4. *Locknut*
5. *Seat switch slot*
6. *Seat switch connector*
7. *Wire tie*

5. Mount seat to seat base with (3) remaining locknuts.

Note: Seat may be adjusted for operator comfort by positioning seat as desired in seat base slots.

6. Tighten all locknuts.

7. Insert seat switch connector into wire harness connector.

8. Secure wire harness to front of seat base with wire tie.

BEFORE OPERATING

ACTIVATING AND CHARGING BATTERY

The battery must be removed from the machine so it can be filled with electrolyte and charged. Bulk electrolyte with 1.260 specific gravity must be purchased from a local battery supply outlet. Remove the battery and activate it as follows:

1. Tip seat forward exposing battery.

2. Remove wing nut securing battery hold downs to rider chassis (Fig. 5).

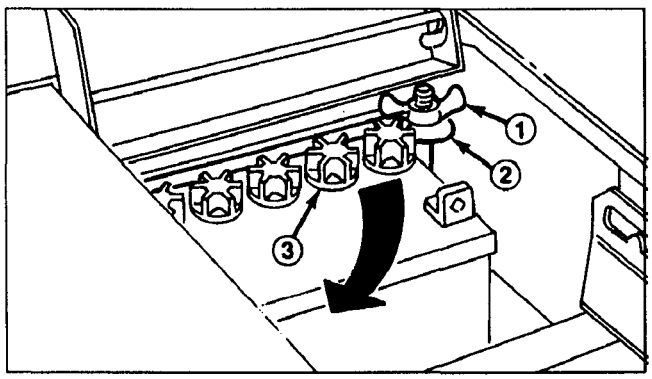

Figure 5

1. *Wing nut*
2. *Battery hold downs*
3. *Filler cap*

3. Lift up on top battery hold down and pivot rearward.

4. Remove battery from chassis and set it aside.

5. Remove filler caps from battery and slowly fill each cell until electrolyte is just above the "LOWER" fill line.

6. Leave filler caps off and connect a 3-4 amp battery charger to battery posts. Charge battery at a rate of 4 amperes or less for 4 hours (12 volt).

7. When battery is charged, disconnect charger from electrical outlet and battery posts.

8. Slowly add electrolyte or distilled water to each cell until level is just below the "UPPER" fill line. Reinstall filler caps. Once battery is in service, distilled water only should be added; never add more electrolyte.

IMPORTANT: Do not overfill battery. Electrolyte will overflow onto other parts and severe corrosion and deterioration will result.

9. Install the battery with the terminal posts toward the rear of the machine and vent tube on left side of battery, thru hole in frame (Fig. 6).

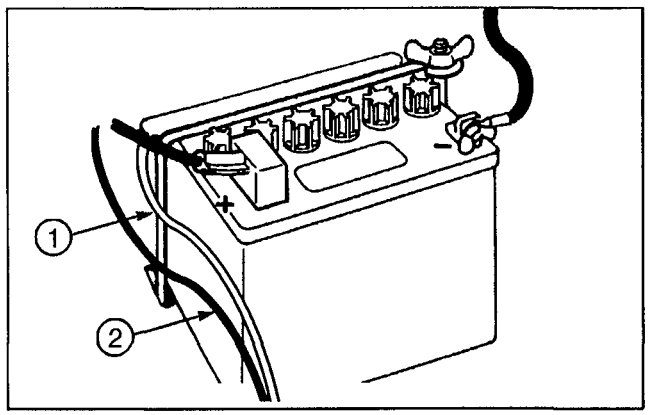

Figure 6

1. *Vent tube*
2. *Throttle cable*

10. Reinstall battery hold downs.

WARNING

Be sure battery hold downs do not touch battery posts during reinstallation of battery. Contact between battery hold downs and posts could result in personal injury and/or damage to the electrical system.

11. Install the red positive cable (rubber boot over end) to the positive (+) terminal and the negative cable (black) to the negative (–) terminal of the battery and secure with capscrews and wing nuts. Slide the rubber boot over the positive terminal to prevent a possible short-out from occurring (Fig. 6).

FILL CRANKCASE WITH OIL

The rider is shipped from the factory without oil in the crankcase.

1. Place rider on a level surface.

2. Unscrew and remove the dipstick from the oil fill tube (Fig. 7).

3. Insert a funnel into the tube and slowly add engine oil into the crankcase, using oil fill chart below. Use a high quality detergent oil classified "For Service SG". Oil viscosity (weight) must be selected according to anticipated ambient temperature.

Oil Fill Chart

832 Rear Engine Rider	36 ounces of oil
1032 Rear Engine Rider	48 ounces of oil
1232 Rear Engine Rider	48 ounces of oil

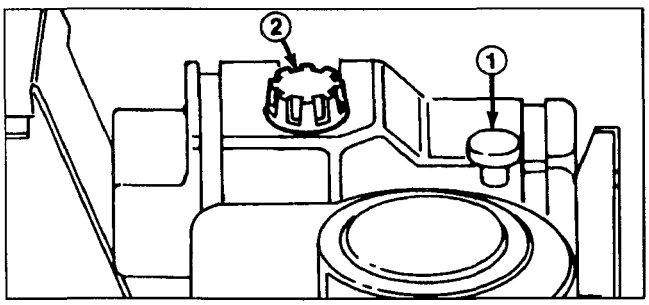

Figure 7

1. Dipstick *2. Fuel tank cap*

A. Above + 40° F (4° C) — Use SAE 30 or 10W-30.

B. 0° to + 40° F (4° C) — Use 10W-30.

C. Below 0° (-18° C) — Use 5W- 20 or 5W–30.

Note: Avoid premature engine failure by ensuring the funnel used is clean so contaminants are not introduced into the crankcase. Wipe up any oil spilled so it will not cause dirt to collect on the engine.

4. Ensure the oil level is to the full mark on the dipstick when it is fully installed. Do not overfill or engine damage may result.

5. Insert the dipstick and turn it clockwise to secure it in the fill tube.

Note: Check the oil level every 5 operating hours or each time rider is used. Initially, drain the oil and replace it after the first 5 hours of operation to remove the contaminants produced by normal engine break-in; thereafter, under normal conditions, change oil after every 25 hours of operation. Change the oil more frequently when the engine is operated in dusty or dirty conditions.

FILL FUEL TANK WITH GASOLINE

DANGER

Because gasoline is flammable, caution must be used when storing or handling it. Do not fill fuel tank while engine is running, hot or when machine is in an enclosed area. Vapors may build up and be ignited by a spark or flame source many feet away. DO NOT SMOKE while filling the fuel tank to prevent the possibility of an explosion. Always fill fuel tank outside and wipe up any spilled gasoline before starting engine. Use a funnel or spout to prevent spilling gasoline, and fill tank to about 1/2 inch (13 mm) below the filler neck. Store gasoline in a cool, well-ventilated place; never in an enclosed area such as a hot storage shed. To ensure volatility, do not buy more than a 30 day supply of gasoline. Gasoline is a fuel for internal combustion engines; therefore, do not use it for any other purpose. Since many children like the smell of gas, keep it out of their reach because the fumes are explosive and dangerous to inhale.

The Toro Company strongly recommends the use of clean, fresh *UNLEADED* gasoline in Toro gasoline powered products. Unleaded gasoline burns cleaner, extends engine life, and promotes good starting by reducing the build-up of combustion chamber deposits. Leaded gasoline can be used if unleaded is not available.

Toro also recommends that Toro Stabilizer/Conditioner be used regularly in all Toro gasoline powered products during operation and storage seasons. Toro Stabilizer/Conditioner cleans the engine during operation and prevents gum–like varnish deposits from forming in the engine during storage.

BEFORE OPERATING

NOTE: NEVER USE METHANOL, GASOLINE CONTAINING METHANOL, GASOHOL CONTAINING MORE THAN 10% ETHANOL, LEADED PREMIUM GASOLINE OR WHITE GAS BECAUSE ENGINE FUEL SYSTEM DAMAGE COULD RESULT.

DO NOT USE FUEL ADDITIVES OTHER THAN THOSE MANUFACTURED FOR FUEL STABILIZATION DURING STORAGE SUCH AS TORO'S STABILIZER/CONDITIONER OR A SIMILAR PRODUCT. TORO'S STABILIZER/CONDITIONER IS A PETROLEUM DISTILLATE BASED STABILIZER/CONDITIONER. TORO DOES NOT RECOMMEND STABILIZERS WITH AN ALCOHOL BASE SUCH AS ETHANOL, METHANOL OR ISOPROPYL. STABILIZERS SHOULD NOT BE USED TO TRY TO ENHANCE THE POWER OR PERFORMANCE OF MACHINE.

1. Clean area around fuel tank cap so foreign matter cannot enter tank when cap is removed (Fig. 7).
2. Remove cap from fuel tank and fill tank with unleaded gasoline to within 1/2" (13 mm) from top of tank. Then reinstall fuel tank cap.
3. Wipe up any gasoline that may have spilled.

CHECK TIRE PRESSURE

Check and ensure the tires are inflated to 12 psi (82.7 kPa) before operating the machine.

CONTROLS

Gear Shift (Fig. 8)—Transaxle has five forward speeds, neutral and reverse. The gear shift lever is located at right side of operator. An interlock switch prevents engine from being started when transaxle is in any gear except neutral.

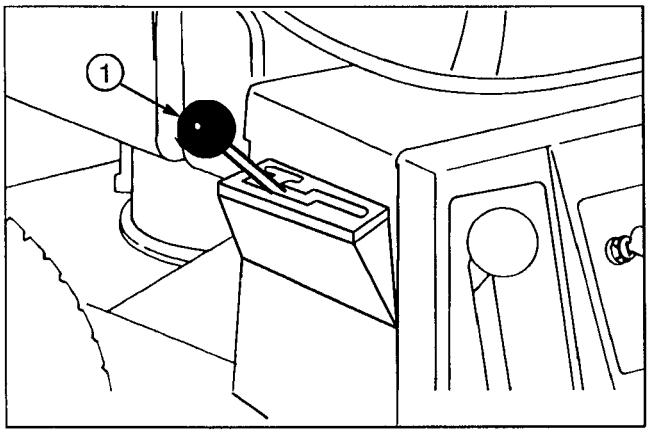

Figure 8

1. Gear shift

Clutch Pedal (Fig. 9)—Used in conjunction with gear shift. Depress clutch pedal fully when shifting gears and whenever brake is used.

Brake Pedal (Fig. 9)—Must be depressed to slow down or stop the rider. When pedal is depressed, a caliper engages the brake disc at side of transaxle. Remember to depress clutch pedal when using brake.

Note: Avoid depressing brake pedal while clutch is engaged otherwise premature brake wear will occur. Do not rest foot on pedal while mowing.

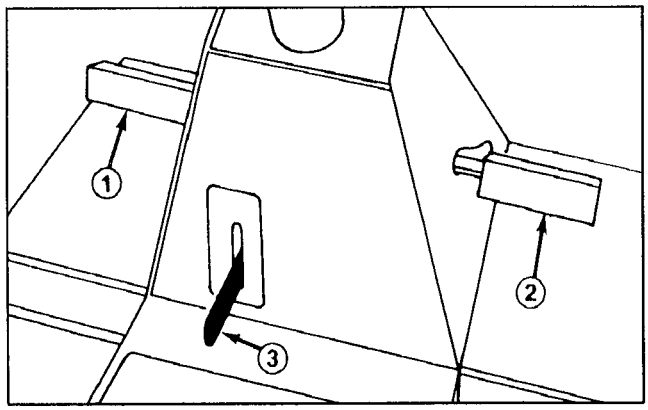

Figure 9

1. Clutch pedal *2. Brake pedal* *3. Parking brake*

Parking Brake (Fig. 9)—Parking brake must be used in conjunction with brake pedal. When pedal is depressed, end of parking brake lever holds brake pedal in depressed position and a caliper engages the brake disc at side of transaxle.

Deck Engagement Lever (Fig. 10)—Engages and disengages the cutter blade. An interlock switch prevents engine from starting when control is in the ENGAGE position. Engine will start when control is in DISENGAGE position only.

Ignition Switch (Fig. 10)—Switch is part of engine ignition system, and it has three positions: OFF, RUN and START. Key automatically returns to RUN position from START position when released after engine starts.

CONTROLS

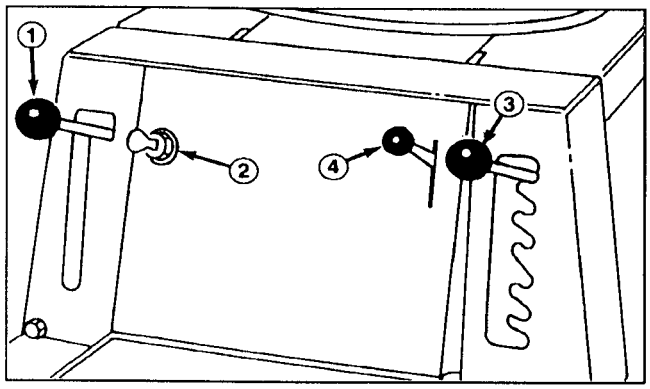

Figure 10

1. *Deck engagement lever*
2. *Ignition switch*
3. *Height–of–cut control*
4. *Throttle control*

Height–of–Cut Control (Fig. 10)—Control varies the cutting height from approx. 1–1/2 to 4 inches (38 to 102 mm) in six increments.

Throttle Control (Fig. 10)—Connects to and operates carburetor mounted throttle and choke. Control has four positions: IDLE, HOT RESTART, OPERATE and CHOKE. Push control slightly to the left and upward to obtain CHOKE position.

Back–Up Recoil Starter (Fig. 11) (models 70080 & 70120 only)—Recoil starter must be used in conjunction with ignition switch. After turning ignition key to ON position, pull recoil starter handle to start engine.

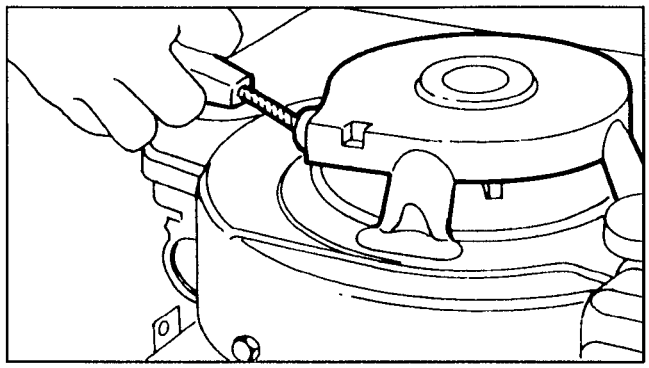

Figure 11

STARTING AND STOPPING INSTRUCTIONS

START AND OPERATE MACHINE

Note: Operator must be seated to activate seat switch before unit will crank.

1. Sit on seat, shift into neutral (N), move deck engagement lever to DISENGAGE.

2. Move throttle control to CHOKE position and rotate ignition key to START. When engine starts, release key and move throttle control between OPERATE and IDLE.

3. Select desired height-of-cut and move deck engagement lever to ENGAGE.

4. Release parking brake (if necessary), depress clutch pedal and shift into gear. Release clutch pedal slowly and smoothly.

RECOIL STARTING

(Models 70080 & 70120 only)

1. Shift into neutral (N), move deck engagement lever to DISENGAGE. Lock the parking brake.

2. Move throttle control to CHOKE position, and rotate ignition key to RUN. Stand to right side of rider, pull recoil starter handle out until positive engagement results; then pull handle vigorously to start engine. When the engine starts, immediately move throttle control between OPERATE and IDLE positions if choke was used for starting.

IMPORTANT: For 832 and 1032 models, do not pull recoil rope to its limit or let go of the starter handle when rope is pulled out because rope may break or recoil assembly may be damaged.

3. Select desired height-of-cut and move blade control to ENGAGE.

4. Release parking brake, depress clutch pedal and shift into gear. Release clutch pedal slowly and smoothly.

TO STOP

1. Depress clutch and brake pedals, move throttle control lever to SLOW position, move deck engagement lever to DISENGAGE, and rotate ignition key to OFF.

2. Shift transaxle to neutral and engage parking brake.

3. Remove key from ignition switch. Wait for all moving parts to stop before getting off seat.

OPERATING INSTRUCTIONS

BREAK-IN

The engine requires no special break-in other than changing oil after the first five hours of operation. Operate the transaxle in all gears to ensure that drive system is functioning correctly. After the first five hours of operation, check the condition of the belts and drive chain.

USING PARKING BRAKE

CAUTION

If the engine stalls or must be stopped while operating on a hill or slope, the engine must be shut off and parking brake engaged.

1. Depress brake pedal fully and shift transaxle to neutral.

2. Move parking brake control upward and release brake pedal.

3. To release the parking brake, depress brake pedal, and parking brake lever will return it to its disengaged position. Release brake pedal slowly.

ADJUSTING HEIGHT-OF-CUT

The height-of-cut may be set in one of six positions from approximately 1-1/2 to 4 inches (38 to 102 mm).

1. Ensure the deck engagement lever is in DISENGAGE position.

2. Move height-of-cut control into desired setting.

3. To engage blade for cutting, move deck engagement lever to ENGAGE.

OPERATING PROCEDURE

1. Move deck engagement lever to DISENGAGE.

2. Start the engine: refer to Starting/Stopping Instructions, page 14.

IMPORTANT: When rider is used for the first time, operate the transaxle in all gears to ensure that drive system is functioning correctly, and become familiar with the controls and operating characteristics. Never shift while the machine is moving or without first depressing the clutch pedal; transaxle damage could result.

WARNING

To avoid loss of control, always come to a complete stop before shifting gears, and slow down when turning, backing and changing direction. Look behind and down to ensure area is clear before backing.

3. Depress clutch pedal and shift transaxle into selected gear. Then release pedal slowly until traction drive engages.

IMPORTANT: To avoid a jerky start and putting a heavy load on the transaxle, release clutch pedal slowly. If shifting into reverse gear is difficult, jog clutch pedal in and out to get gears to mesh. Do not force the gear shift because damage may result. Should you encounter a jerking or grabbing condition during operation, contact your local Authorized TORO Service Dealer for assistance.

4. To engage blade for cutting, move height–of–cut control to the desired setting. Place throttle in OPERATE position. Then move deck engagement lever to ENGAGE position.

5. To stop engine, in sequence, depress clutch and brake pedals, move throttle control to IDLE, deck engagement lever into DISENGAGE, gear shift into neutral, throttle to IDLE, engage parking brake, and rotate key to OFF position after allowing the engine to idle a short period.

SIDE DISCHARGING OR BAGGING

To side discharge or use bagging attachment, stop engine and wait for all moving parts to stop. Then remove the wingnut securing the discharge cover (Fig. 12) to the mower housing. **NEVER REMOVE THE GRASS DEFLECTOR FROM THE MOWER HOUSING (Fig. 12).** Save the discharge cover and wingnut for possible future reinstallation.

If you no longer wish to side discharge or bag clippings, the discharge cover can be reinstalled by securing it the mower housing with the wingnut.

GRASS DEFLECTOR

WARNING

NEVER remove the grass deflector (Fig. 12) from the mower housing. If the discharge cover under the grass deflector is removed in order to side discharge or bag, the grass deflector routes discharged material down toward the turf. If the deflector is ever damaged, replace it. Without the deflector or complete grass catcher assembly mounted in place, discharged material could cause personal injury or blade contact could occur.

RECYCLER® RIDER TIPS

RECYCLER® RIDER FEATURES

Your Toro Recycler® rider has a new and completely different cutting concept. It leaves your lawn with a bagged look without bagging clippings.

The rider is equipped with special parts (Fig. 12) which increase your rider's ability to cut and recut grass clippings, leaves, and other yard debris into tiny particles which are injected down into the grass. These parts are:

- Deck ring
- Special blade and blade stiffener
- Discharge cover
- Four special "kickers" positioned on the underside of the mower deck in strategic positions. (A fifth kicker is molded into the discharge cover.)

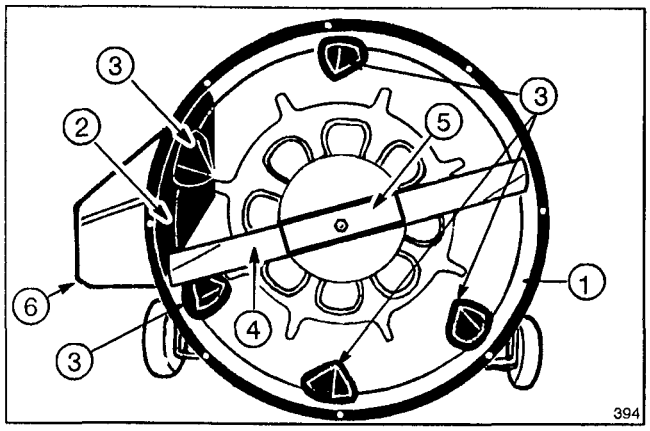

Figure 12

1. *Deck ring*
2. *Discharge cover*
3. *Kickers*
4. *Blade*
5. *Blade stiffener*
6. *Grass deflector*

TIPS FOR CUTTING GRASS

Even with the Recycler® rider, you may encounter conditions where it is not possible to incorporate all of the grass clippings or leaves all of the time into the grass. Follow these instructions for the best cutting results and lawn appearance:

- Always use FAST (full) throttle when mowing.

- Maintain a **sharp blade** throughout the cutting season. A sharp blade cuts cleanly and without tearing or shredding the grass blades like a dull blade. Tearing and shredding causes the grass to turn brown at the edges which impairs growth and increases susceptibility to diseases. About every 30 days, remove the wire from the spark plug and check the cutter blade for sharpness. File down any nicks on blade to restore its sharp edge.

- Clean any residue from the underside of the rider housing and kickers after each use. If residue is allowed to build up in rider housing and on kickers, cutting performance may be unsatisfactory.

- Very long or extremely wet grass can be cut, but specific operating techniques must be used. Start by setting height–of–cut in the highest position. Using 1st gear and maximum throttle speed, move into the grass and cut a swath that is only half as wide as the mower housing. If side discharging, direct grass clippings toward area that was cut previously. Stop forward movement occasionally to allow discharge area to clear itself. Cutting too much grass may clog the mower housing and discharge area. If mower housing does clog, shut engine off, disengage blade and remove the obstruction with a stick.

DANGER

Before removing any obstruction from mower housing, move blade control into DISENGAGE detent, depress clutch and brake pedals, shift into neutral and turn ignition key to OFF position. Remove wire from spark plug to prevent the possibility of accidental starting.

- When the rider is used to cut a lawn for the first time, cut grass slightly longer than normal to ensure that cutting height of mower housing will not cause scalping, which could result from severe undulations of the ground. In general, however, the cutting height used in the past is probably the best one to use. When cutting grass over six inches tall, you may want to cut the lawn twice to hide clippings down in the grass.

- If the grass is ever allowed to grow slightly longer than normal, or if it contains a high degree of moisture, raise cutting height higher than usual and cut the grass at this setting. Next, cut the grass again using the lower, normal setting. This method of cutting long grass results in an even distribution of clippings and an acceptable quality–of–cut.

- In the heat of the summer, it is best to cut only about 1/3 of the grass blade. Cutting below the 3rd setting is not recommended unless grass is sparse or it is late fall when grass growth begins to slow down.

- If the cutting width of the rider is wider than the mower previously used, raise height-of-cut setting one notch to ensure undulations in turf are not cut too short.

- MOWING IN EXTREME CONDITIONS—Air is required to cut and recut grass clippings in rider housing, so do not set height–of–cut too low or totally surround housing by uncut grass. Always try to have one side of the rider housing free from uncut grass, allowing air to be drawn into housing. When making an initial cut thru center of uncut area, operate rider at a slower ground speed and back up if rider starts to clog.

RECYCLER® RIDER TIPS

- STOPPING RIDER—If forward motion of rider has to be stopped while cutting, a clump of grass clippings may be deposited on lawn. Follow this procedure for stopping while cutting:

A. With blade engaged, move onto a previously cut area.

B. Raise deck one or two height–of–cut settings while driving rider forward and deck is in operation.

C. Depress clutch and brake pedals, move throttle control lever to IDLE position, disengage mower and rotate ignition key to OFF.

- MOW AT PROPER INTERVALS—Under most normal conditions you'll need to mow approximately every 4–5 days. But remember, grass grows at different rates at different times. This means that in order to maintain the same height–of–cut, which is a good practice, you'll need to cut more frequently in early spring; as the grass growth rate slows in mid summer, cut only every 8–10 days. If you are unable to mow for an extended period due to weather conditions or other reasons, mow first with the height–of–cut at a high level; then mow again 2–3 days later with a lower height setting.

- Alternate mowing direction. This helps disperse clippings over lawn for even fertilization.

- SIDE DISCHARGING OR BAGGING—To side discharge or use bagging attachment, stop the engine and wait for all moving parts to stop. Then remove the wingnut securing the discharge cover to the mower housing. NEVER REMOVE THE GRASS DEFLECTOR FROM THE MOWER HOUSING.

WARNING

Never remove the grass deflector (Fig. 12) from the mower housing. If the discharge cover under the grass deflector is removed in order to side discharge or bag, the grass deflector routes discharged material down toward the turf. If the deflector is ever damaged, replace it. Without the deflector or complete grass catcher assembly mounted in place, discharged material could cause personal injury or blade contact could occur.

The Recycler® rider's special features reduce clipping size, thus decreasing amount of grass to be disposed of and number of times bagger will have to be emptied.

Note: When bagger is full, mower will begin to inject clippings down into the grass.

If the lawn appearance is not satisfactory after mowing, try one of the following:

- Sharpen the blade.
- Raise the height–of–cut setting on your mower.
- Cut your grass more frequently.
- Overlap cutting swaths instead of cutting a full swath with each pass.
- Mow across the marginal areas a second time.

TIPS FOR CUTTING LEAVES

In the fall, you can cut your leaves up into finely cut particles and inject the particles down into the grass. When spring arrives, the leaf particles will have decomposed and restored valuable nutrients to the soil.

- When cutting is complete, always be sure that 50% of the lawn shows through the finely cut leaf cover. This may require one or more passes over the leaves.
- If there are more than five inches of leaves on lawn, raise the deck one or two notches higher. This makes it easier to feed leaves under mower deck.
- If leaves are not cut up finely enough to be hidden down in the grass, make a second pass 90° to the first pass.
- If you cut up a lot of oak leaves, you might want to add lime to your grass in the spring. Lime reduces the acidity of oak leaves.

MAINTENANCE INTERVAL CHART

	5 Hours	25 Hours	Storage Service	Spring Service	2 Years	Notes
Change Oil (Initial)	X					
Change Oil (Periodic)		X	X			
Check System Interlock	X	X		X	X	Before each use
Check Cutter Blade	X	X	X			
Check Brake	X	X	X	X		
Grease Front Axle Spindles (2) & Wheel Bearings (2) and Rear Axle (2)		X	X			More often in dusty, dirty, conditions.
Lubricate Pivot Points		X	X			
Service Air Cleaner		X	X			
Check Spark Plug		X	X	X		
Check Blade Drive Belt			X			
Check Traction Drive Belt			X			More often in dusty, dirty, conditions.
Drain Gasoline			X			
Clean Outside of Engine		X	X			
Clean Mower Housing	X		X			
Paint Chipped Surfaces			X			
Remove Rear Wheels and Grease Axles			X			
Remove Rear Wheels and Grease Axle Zerks		X				

MAINTENANCE

CAUTION

To prevent accidental starting of the engine, while performing maintenance, shut engine off and remove key from ignition switch. Also, pull wire off spark plug (Fig. 13). Make sure wire does not contact plug accidentally.

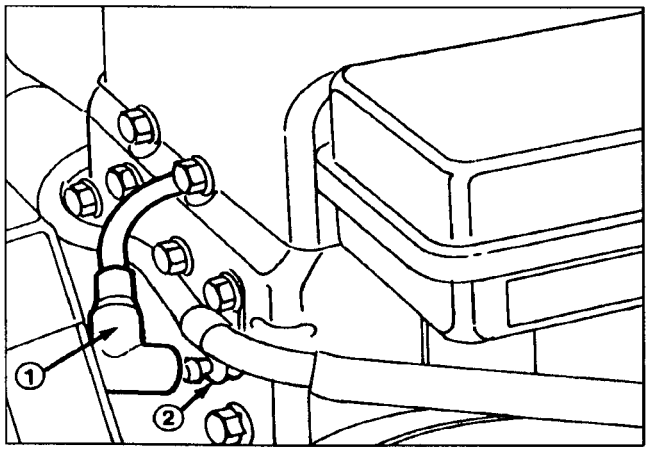

Figure 13

1. Spark plug wire *2. Spark plug*

GREASE FRONT AXLE SPINDLES AND WHEELS AND REAR AXLES

The front axle spindles and wheels must be lubricated after every 25 hours of operation; however, lubricate more frequently when conditions are dusty or sandy.

1. Wipe (4) grease fittings on spindles and wheels (Fig. 14) with a clean rag. If there is paint on front of fittings, scrape it off.

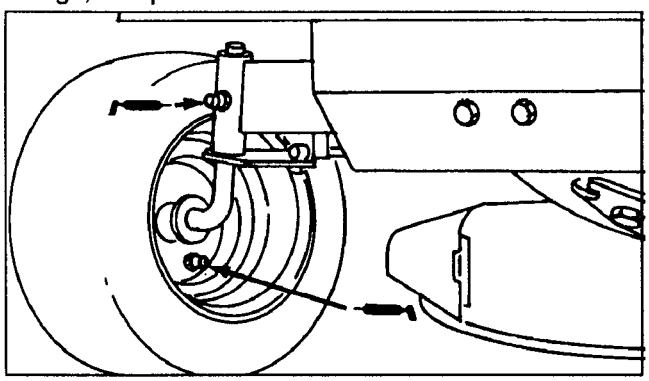

Figure 14

2. Lubricate both axle spindles with No. 2 general purpose grease (Fig. 14). Continue to pump grease until it oozes out the spindle. Wipe up any excess grease.

3. Lubricate both front wheels w/No. 2 general purpose grease (Fig. 14). Pump grease gun until grease oozes. Wipe up any excess grease.

4. Lubricate rear axles with one to two pumps of No. 2 general purpose grease. The zerks are located just inside of the rear tires on the bottom of the transaxle (Fig. 15).

LUBRICATE PIVOT POINTS

The mechanical pivot points on the rider must be lubricated after every 25 hours of operation; however, lubricate more frequently when conditions are dusty or sandy.

IMPORTANT: To lubricate all the mechanical pivot points, the rider must be tipped on its rear end. Before the rider is tipped, drain all gasoline from fuel tank and oil from crankcase. Also remove battery so acid does not spill onto the rider.

1. Drain gasoline from fuel tank: refer to Draining Gasoline From Fuel Tank, page 21.

2. Drain oil from crankcase: refer to Changing Crankcase Oil, steps 1-6, page 19.

3. Remove battery from chassis: refer to Activating and Charging Battery, page 11.

4. Shift transaxle into 1st gear and engage parking brake.

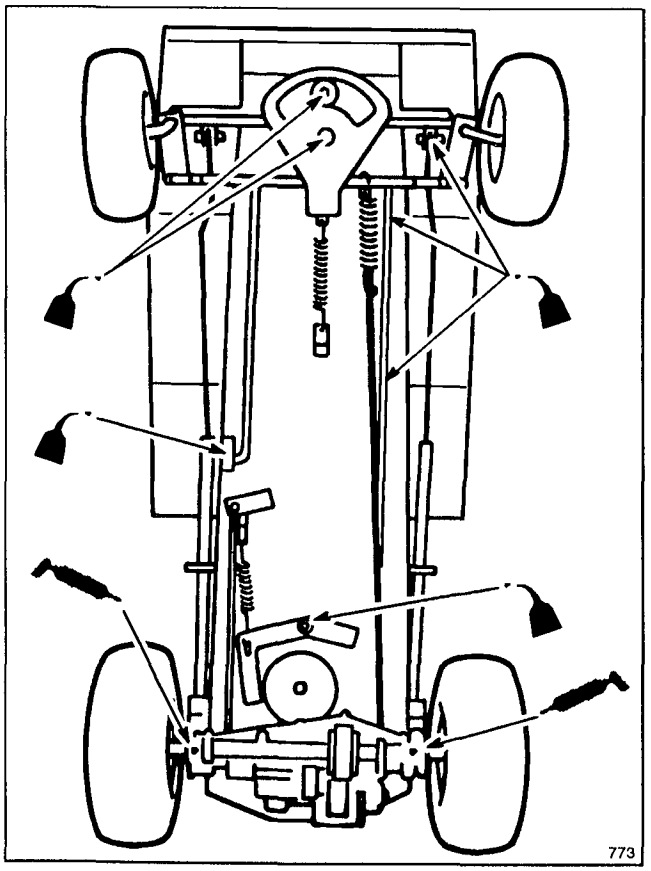

Figure 15

5. Tip rider up and onto its rear end.

6. Remove mower housing from rider chassis: refer to Removing / Installing Cutting Unit, steps 1-5, page 24.

7. Lubricate pivot points in the steering, drive, brake, clutch, and deck engagement linkage with light oil (Fig. 15). Also lubricate mower housing (Fig. 16). Wipe up any excess oil.

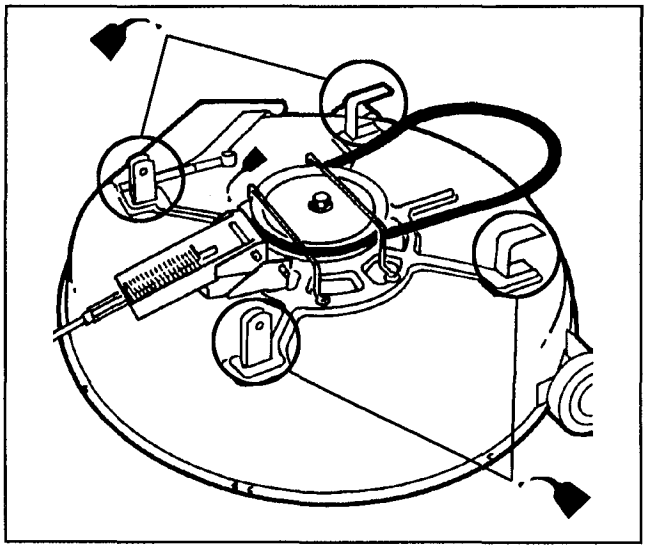

Figure 16

8. Reinstall mower housing onto rider chassis: refer to Removing / Installing Cutting Unit, page 24.

9. Tip rider back to its normal operating position.

10. Fill crankcase with oil: refer to Fill Crankcase With Oil, page 12.

11. Fill fuel tank with gasoline: refer to Fill Fuel Tank With Gasoline, page 12.

12. Reinstall the battery: refer to Activating and Charging Battery, steps 9–11, page 11.

CHECK/CHANGE CRANKCASE OIL

1. Check level of oil before starting engine and after every 5 hours of operation. Maintain oil level at FULL mark on dipstick.

To check level of oil:

A. Position rider on a level surface.

B. Clean the area around oil dipstick so foreign matter cannot enter filler hole when dipstick is removed.

C. Unscrew dipstick and wipe oil off.

D. Screw dipstick fully into filler neck; then remove it and check oil level on dipstick. If level is low, add only enough oil to raise level to FULL mark. Do not overfill or engine damage may result.

E. Screw dipstick back into filler neck.

2. Change oil after first 5 hours of operation and every 25 hours thereafter. Change oil more frequently when operating conditions are extremely dusty or dirty.

To change oil:

A. Position rider on a level surface. Start and run engine for a period to warm the oil.

B. Turn engine off and place drain pan below drain plug (Fig. 17). Remove drain cap. Allow all oil to flow into drain pan. Reinstall drain cap after oil stops flowing.

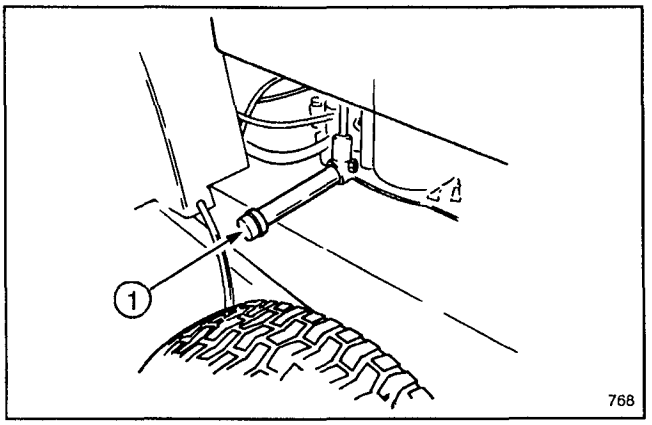

Figure 17

1. Drain cap

C. Unscrew dipstick and add oil to crankcase. Refer to Fill Crankcase With Oil, page 12. Capacity of 8 hp rider crankcase is 36 oz. (1.065 l) and10 & 12.5 hp riders are 48 oz. (1.42 l). **DO NOT OVERFILL** or engine damage may result.

SERVICING AIR CLEANER

The air cleaner must be cleaned after every 25 hours engine operation if engine is operated in clean air conditions. However, element must be cleaned every few hours if operating conditions are extremely dusty or sandy.

Models 832 and 1032

1. Remove wire from spark plug (Fig. 13).

2. Unsnap and lift air cleaner cover off carburetor (Fig. 18).

3. Remove foam element (Fig. 18). Examine element for dirt or discoloration and clean if necessary.

4. Clean element as follows:

A. Wash foam element in solution of liquid detergent and water to remove dirt. Rinse thoroughly in clear water.

B. Wrap the element in cloth and squeeze it dry. Do not twist the element or it may tear.

C. Apply approximately 5 teaspoons (25 ml) of oil to the element, work the oil in until the whole element is impregnated and squeeze the element thoroughly to remove all excess oil.

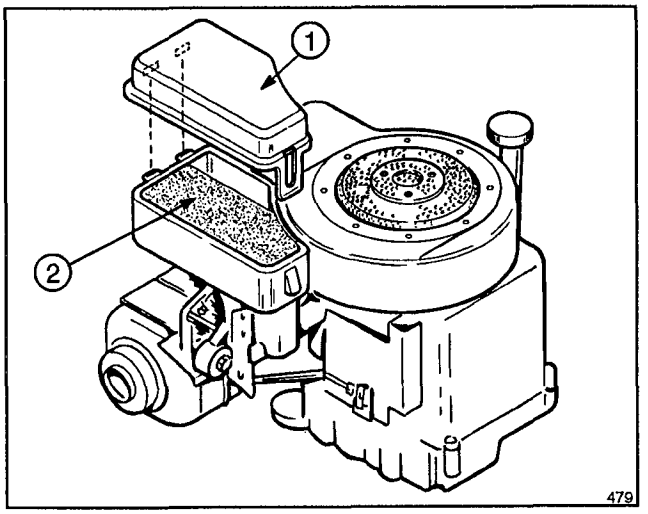

Figure 18

1. Cover *2. Foam element*

5. Reinstall air cleaner foam element and snap cover back on carburetor.

IMPORTANT: Do not operate engine with air cleaner element removed or engine damage will result.

Model 1232 only

1. Remove wire from spark plug (Fig. 13).

2. Remove knob and air cleaner cover (Fig. 19).

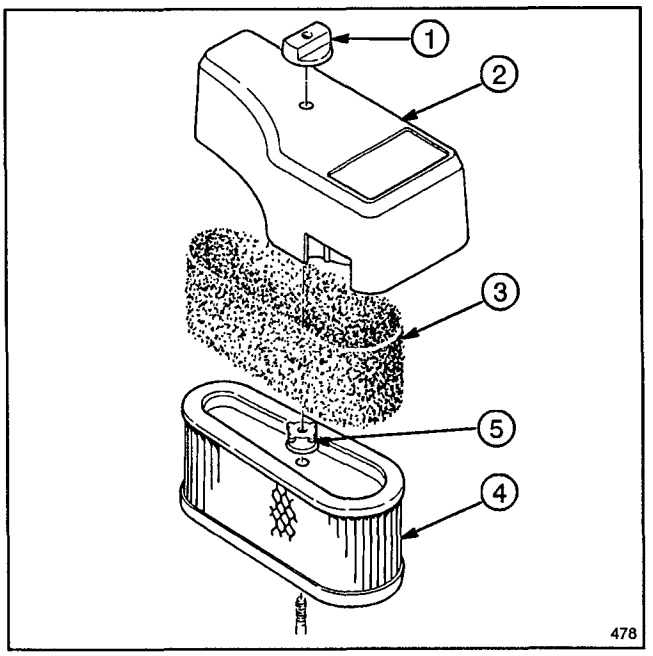

Figure 19

1. Knob
2. Air cleaner cover
3. Foam pre-cleaner
4. Paper cartridge
5. Nut

3. Every 25 hours the foam pre–cleaner should be cleaned (Fig. 19). Remove foam pre–cleaner by sliding it off the paper cartridge (Fig. 19).

A. Wash foam pre–cleaner in liquid soap and warm water. Rinse thoroughly in clear water.

B. Wrap foam pre–cleaner in cloth and squeeze dry.

C. Saturate foam in engine oil. Squeeze to remove excess oil.

4. The paper air cleaner cartridge should be replaced every 100 hours. Remove (1) one nut from top of paper cartridge (Fig. 19).

5. Clean air cleaner body carefully to prevent dirt from entering carburetor. Remove and discard paper cartridge.

6. Insert a new paper cartridge into air cleaner body. Reassemble air cleaner.

IMPORTANT: Petroleum solvents, such as kerosene, are not to be used to clean paper cartridge. They may cause deterioration of the cartridge. DO NOT OIL CARTRIDGE. DO NOT USE PRESSURIZED AIR TO CLEAN CARTRIDGE.

IMPORTANT: Always operate engine with air cleaner element in place or engine damage will result.

REPLACING SPARK PLUG

Since air gap between center and side electrodes of the spark plug increases gradually during normal operation of the engine, check condition of electrodes after every 25 operating hours. Recommended air gap is 0.030 of an inch (0.762 mm). Correct spark plug to use is:

Champion RJ –19LM.

Note: The spark plug usually lasts a long time; however, the plug should be removed and checked whenever the engine malfunctions.

1. Clean area around spark plug so foreign matter cannot fall into cylinder when spark plug is removed.

2. Pull wire off spark plug and remove plug from cylinder head (Fig. 20).

3. Check condition of side electrode, center electrode, and center electrode insulator to ensure there is no damage.

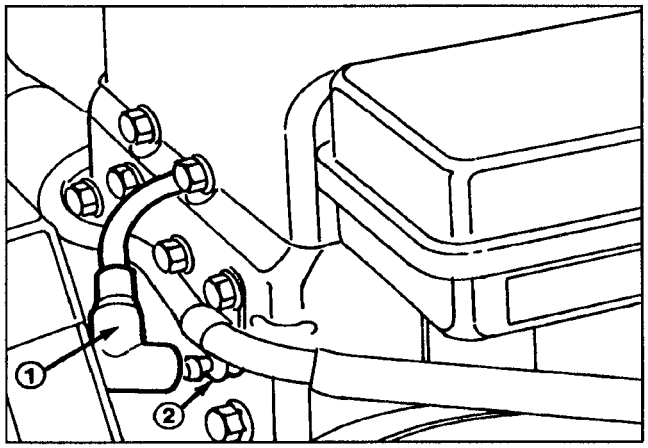

Figure 20

1. Spark plug wire *2. Spark plug*

IMPORTANT: A cracked, fouled, dirty or defective spark plug must be replaced. Do not sand blast, scrape or clean electrodes by using a wire brush because grit may eventually release from the plug and fall into the cylinder which could damage the engine.

4. Set air gap between center and side electrodes at 0.030 of an inch (0.762 mm) (Fig. 21). Install correctly gapped spark plug w/gasket seal, and tighten plug to 15 ft-lb (20.4 N·m).

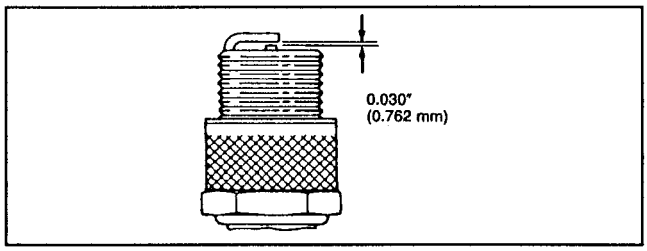

Figure 21

DRAINING GASOLINE FROM FUEL TANK

CAUTION

Since gasoline is highly flammable, drain it outdoors and make sure engine is cool to prevent a potential fire hazard. Wipe up any gasoline that may have spilled. Do not drain gasoline near any open flame or where gasoline fumes may be ignited by a spark. Do not smoke a cigar, cigarette or pipe when handling gasoline.

IMPORTANT: When the rider is tipped, all gasoline must be drained from the fuel tank.

1. Clean area around fuel tank cap so foreign matter cannot enter filler hole when cap is removed. Next, remove cap from fuel tank.

2. Using a pump-type syphon, drain gasoline into a clean gas can.

Note: There is no other recommended way to drain gasoline from the fuel tank, other than by using a pump-type syphon. An inexpensive syphon can be purchased at a hardware store.

ADJUSTING THROTTLE/CHOKE CONTROL

To ensure that choke and carburetor-mounted throttle are operating properly, the throttle control must be adjusted correctly. Hard starting may be an indication of an incorrect adjustment. If throttle control is ever replaced, an adjustment is also necessary. Before the carburetor is adjusted, ensure that throttle control is operating properly.

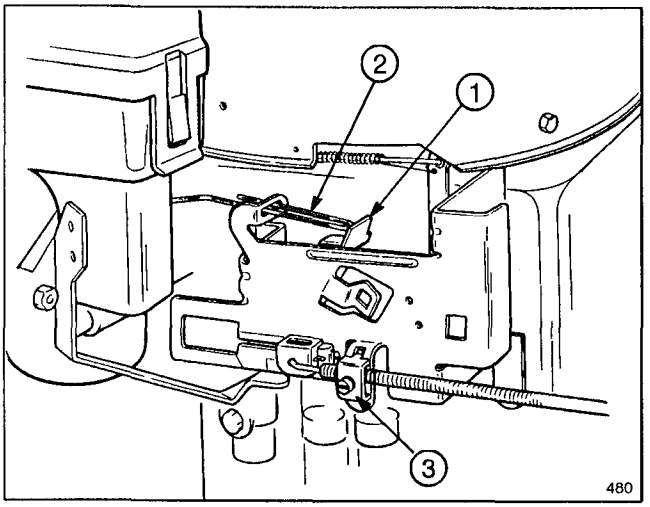

Figure 22

1. Throttle lever 2. Choke link 3. Throttle cable clamp

1. Move throttle control lever to FAST position.

2. The throttle lever should be just touching the choke link (Fig. 22); if they are not in this position, an adjustment is necessary:

A. Place remote control lever in OPERATE position.

B. Loosen the throttle cable clamp screw (Fig. 22) and move the control cable casing and wire until the throttle lever touches choke link.

C. Tighten the cable clamp screw. Move control to SLOW then back to FAST to ensure proper adjustment. Repeat procedure if necessary.

ADJUSTING CARBURETOR

The carburetor has been set at the factory, but an occasional adjustment may be required. However, do not make unnecessary carburetor adjustments because factory settings are usually correct. An adjustment may be required to compensate for differences in fuel, temperature, altitude and load.

IMPORTANT: Before the carburetor is adjusted, throttle control must be checked for proper operation: refer to Adjusting Throttle/Choke Control, page 22.

1. Gently turn idle mixture valve clockwise until it **just** closes (Fig. 23). Turning valve in too far may cause damage.

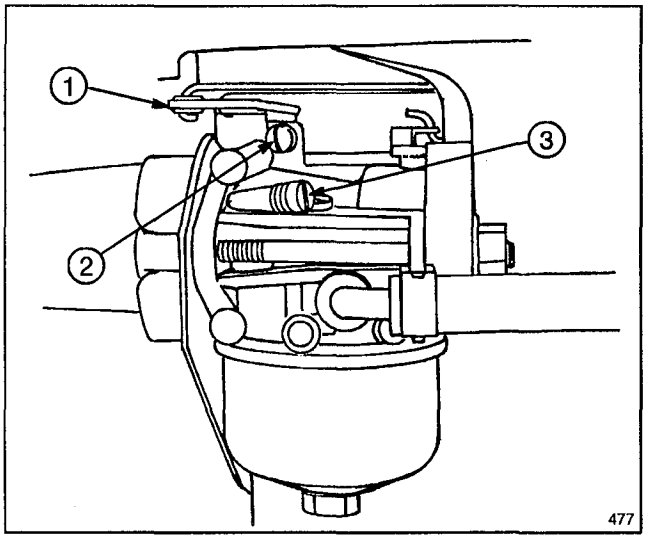

Figure 23

1. Throttle 3. Idle mixture valve
2. Idle speed adjusting screw

2. Open idle mixture valve one turn counterclockwise. This initial adjustment will permit the engine to be started and warmed up (approximately 5 minutes) prior to final adjustment.

3. Start engine and move throttle control to IDLE position.

WARNING

Engine must be running so final adjustment of the carburetor can be performed. To guard against possible personal injury, move blade control into DISENGAGE detent, shift into neutral, and engage parking brake. Keep hands, feet, face, and other parts of the body away from the cutter blade, underside of mower housing and the discharge area.

4. Rotate throttle (Fig. 23) counterclockwise and hold against idle speed adjusting screw (Fig. 23) while turning idle speed adjusting screw to obtain 1750 RPM.

5. While still holding throttle against idle speed adjusting screw, turn idle mixture valve in (lean) and out (rich) slowly until engine idles smoothly. Recheck idle RPM and readjust if required.

6. Release throttle. Engine should accelerate smoothly. If it does not, carburetor should be readjusted, usually to a slightly richer mixture.

7. After carburetor is adjusted, shut engine off. If mower will not be used immediately, remove key from switch to prevent possibility of accidental starting.

SERVICING CUTTER BLADE

1. Make sure engine is shut off and remove wire from spark plug.

IMPORTANT: To remove blade from spindle shaft, the riding mower must be tipped on its rear end. Before the unit is tipped, drain all gasoline from fuel tank and remove oil from crankcase. Also remove battery so acid does not spill onto the rider. (ALL BAGGING ATTACHMENTS MUST BE REMOVED BEFORE TIPPING UNIT.)

2. Drain gasoline from fuel tank: refer to Draining Gasoline From Fuel Tank, page 21.

3. Drain oil from crankcase: refer to Changing Crankcase Oil, page 19.

4. Remove battery from chassis: refer to Activating and Charging Battery, page 11.

5. Shift transaxle into 1st gear and engage parking brake. Tip rider onto its rear end.

6. Grasp end of blade using a rag or thickly padded glove; then remove blade bolt, curved washer, blade stiffener and blade (Fig. 24).

Note: Since blade bolt is tightened to 45-60 ft-lb (61-81 N·m) at the factory, it may be difficult to remove. If the bolt cannot be removed, contact an Authorized TORO Service Dealer or a "service station" for assistance.

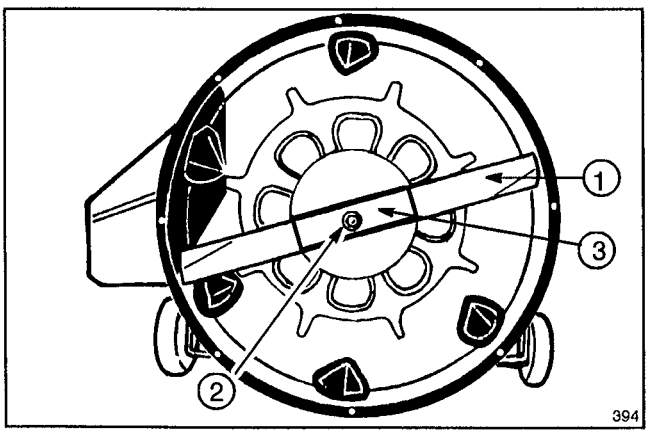

Figure 24

1. Blade 2. Blade bolt & curved washer 3. Blade stiffener

7. Using a file, sharpen cutting edge at both ends of the blade (Fig. 25).

WARNING

Check cutter blade every time rider is tipped on end. If blade bolt holding blade is loose, tighten it to 45-60 ft-lb (61-81 N·m). If blade or sail (Fig. 25) at end of blade is worn, eroded or cracked, replace the blade. Replace the blade if it is bent or out-of-balance. Always use a genuine TORO replacement blade to ensure safety and best performance. NEVER USE A WILL-FIT REPLACEMENT BLADE.

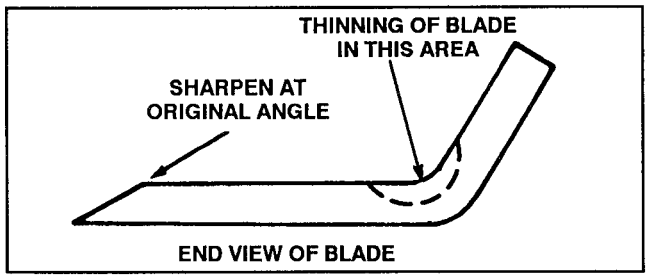

Figure 25

IMPORTANT: Sharpen top side of the blade and maintain original cutting angle to ensure a sharp cutting edge. The blade will remain balanced if same amount of material is removed from both cutting edges.

8. Check balance of blade by putting it on a blade balancer. (An inexpensive balancer can be purchased at a hardware store.) A balanced blade will stay in a horizontal position on the balancer. By contrast, a blade that is not balanced will settle to the heavy side. If blade is not balanced, file more material off cutting edge of the blade. Continue to file and check the blade until it is balanced.

9. In sequence, install blade, blade stiffener, curved washer and blade bolt (Fig. 24). The concave side of the curved washer must point toward the blade. Tighten blade bolt to 45-60 ft-lb (61-81 N·m).

IMPORTANT: Make sure cutting edge of blade is away from mower housing.

10. Tip rider back to its normal operating position.

11. Fill crankcase with oil: refer to Fill Crankcase With Oil, page 12.

12. Fill fuel tank with gasoline: refer to Fill Fuel Tank With Gasoline, page 12.

13. Install the battery: refer to Activating and Charging Battery, page 11.

MAINTENANCE

CLEANING UNDERSIDE OF MOWER HOUSING

To ensure a good quality-of-cut, underside of mower housing, kickers and inside of grass deflector (if discharge cover has been removed) (Fig. 12) must be kept clean. Periodically apply a coat of paste wax on inside of mower housing. Wax the grass deflector if the discharge cover has been removed (Fig.12). This will retard rust and prevent dirt and grass from sticking on inside of housing.

1. Make sure engine is shut off. Then pull wire off spark plug.

IMPORTANT: To clean underside of mower housing, the riding mower must be tipped on its rear end. Before the unit is tipped, drain all gasoline from fuel tank and oil from crankcase. Also remove battery so acid does not spill onto the rider. (ALL BAGGING ATTACHMENTS MUST BE REMOVED BEFORE TIPPING UNIT.)

2. Drain gasoline from fuel tank: refer to Draining Gasoline From Fuel Tank, page 21.

3. Remove battery from chassis: refer to Activating and Charging Battery, page 11.

4. Shift transaxle into 1st gear and engage the parking brake. Tip unit onto its rear end.

5. Remove grass clippings and dirt sticking to inside of housing by spraying with a garden hose. Scrape out any grass and dirt not removed; then spray housing again.

6. Since rider is tipped on end, check condition of blade (Fig. 24).

7. Tip rider back to its normal operating position.

8. Fill crankcase with oil: refer to Fill Crankcase With Oil, page 12.

9. Fill fuel tank with gasoline: refer to Fill Fuel Tank With Gasoline, page 12.

10. Install the battery: refer to Activating and Charging Battery, page 11.

REMOVING / INSTALLING CUTTING UNIT

1. Lock parking brake and turn front wheels to a full turn position to allow more clearance for cutting unit.

2. Set height-of-cut control to lowest setting.

3. Loosen belt guides near engine pulley and rotate them out of the way. Remove deck belt from engine pulley (Fig. 26).

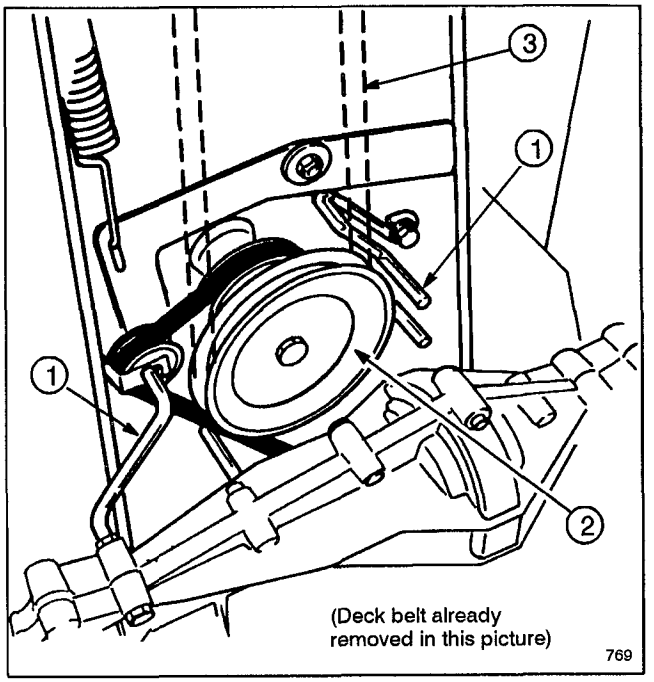

Figure 26

1. Belt guides *2. Engine pulley* *3. Deck belt*

4. Remove cotter pin from adjustment rod and pull from pivot tube arm (Fig. 27).

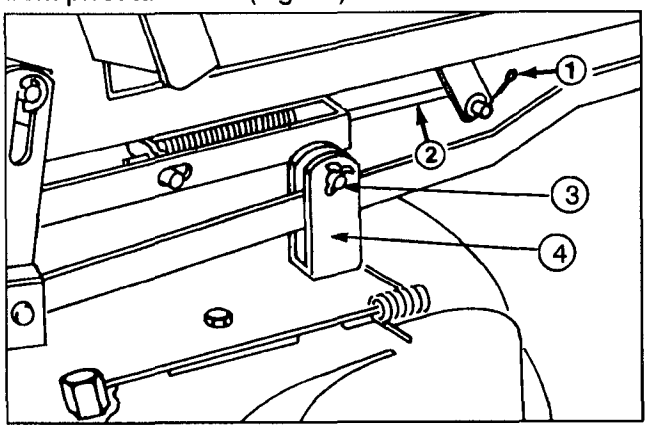

Figure 27

1. Cotter pin
2. Adjustment rod
3. Cotter pin and clevis pin
4. Front hanger bracket

5. Remove cotterpins from clevis pins on front hanger brackets. Hold front of cutting unit in place with one hand, to prevent falling, and remove clevis pins to lower cutting unit to ground. Pull rear hanger brackets off pins on rear suspension arms. Set height-of-cut control to highest position and slide cutting unit from under rider.

6. Reinstall in reverse order.

REPLACING BLADE DRIVE BELT

1. Lock parking brake and remove wire from spark plug.

2. Remove cutting unit: refer to Removing/Installing Cutting Unit, page 24.

3. Loosen and remove (1) mounting screw securing each belt guide to cutting unit. Pivot belt guides away from spindle pulley and remove belt. Visually inspect belt for wear or damage (Fig. 26).

4. Install new belt if needed and reinstall belt guideS.

5. Reinstall cutting unit: refer to Removing/Installing Cutting Unit, page 24.

ADJUSTING BLADE DRIVE BELT

1. Set height-of-cut lever in lowest setting and deck engagement lever to ENGAGE.

2. Remove cotter pin from adjustment rod (Fig. 27).

3. Rotate adjustment rod until there is 0.060 inch (1.5 mm) or less between end of slot in engagement bracket and outer diameter of pin (Fig. 28).

Note: Adjustment rod is a left hand thread.

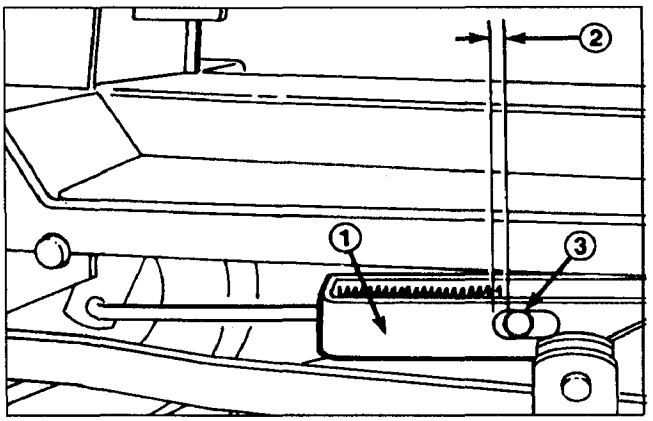

Figure 28

1. *Engagement bracket*
2. *0.060 inch max. (1.5 mm)*
3. *Pin*

REPLACING TRACTION DRIVE BELT

1. Remove cutting unit: refer to Removing/Installing Cutting Unit, page 24.

2. Remove belt guides from transaxle pulley. Loosen and rotate belt guides at engine pulley out of the way. Loosen locknut and remove belt retainer from idler pulley.

Note: To make belt removal easier, set and lock clutch with parking brake to remove tension from belt.

3. Remove deck belt from engine pulley (Fig. 26).

4. Remove drive belt. Inspect belt for damage or wear. Install new belt if needed.

5. Reinstall deck belt.

6. Replace belt guides for transaxle pulley. Reinstall belt retainer on idler pulley and tighten locknut.

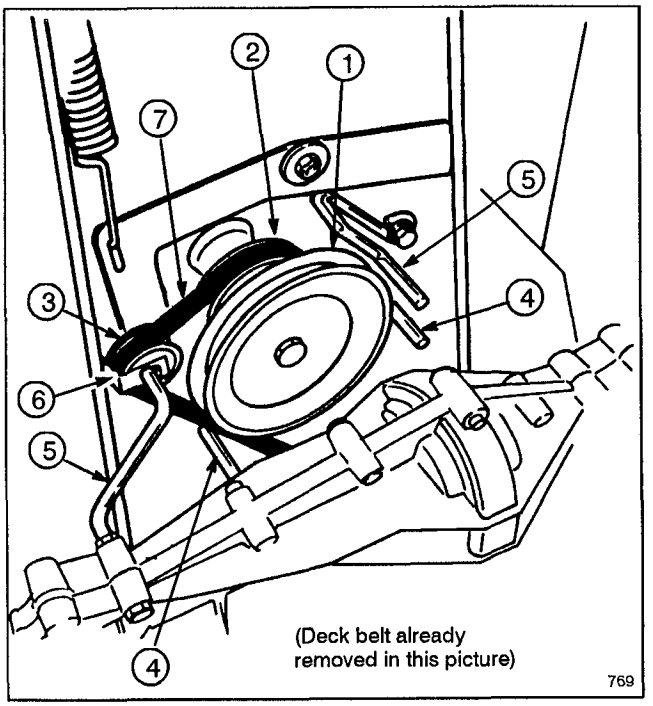

Figure 29

1. *Engine pulley*
2. *Transaxle pulley*
3. *Idler pulley*
4. *Transaxle pulley belt guides*
5. *Engine pulley belt guides*
6. *Belt retainer and locknut*
7. *Drive belt*

IMPORTANT: Idler retainer must be installed at an 80° to 90° angle to the idler mounting bracket (Fig. 30) or rider may creep with clutch pushed down.

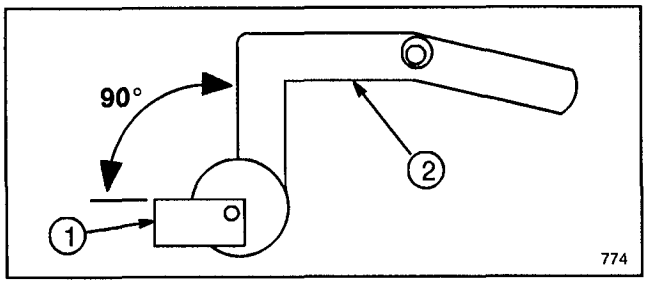

Figure 30

1. *Idler pulley*
2. *Idler mounting bracket*

7. Reinstall cutting unit: refer to Removing/Installing Cutting Unit, page 24.

ADJUSTING FRONT WHEEL ALIGNMENT

1. To align front wheels, loosen jam nut and turn tie rod end (there is only one adjustable tie rod) until centerline distance across front of wheels (d') is .06 inch (1.5 mm) to .25 inch (6.3 mm) less than centerline distance across rear of front wheels (d") (Fig. 31 & 32).

2. Retighten jamnuts.

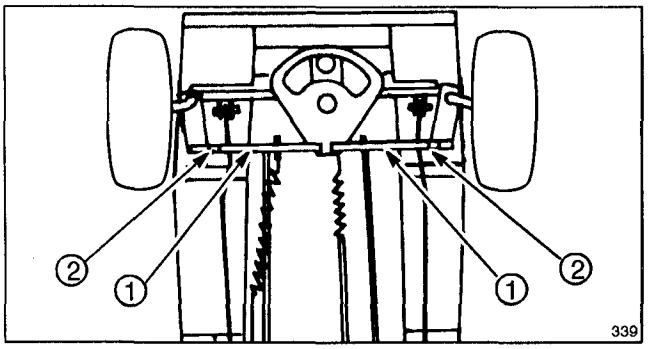

Figure 31

1. Tie rod (only one rod is adjustable) *2. Jam nut*

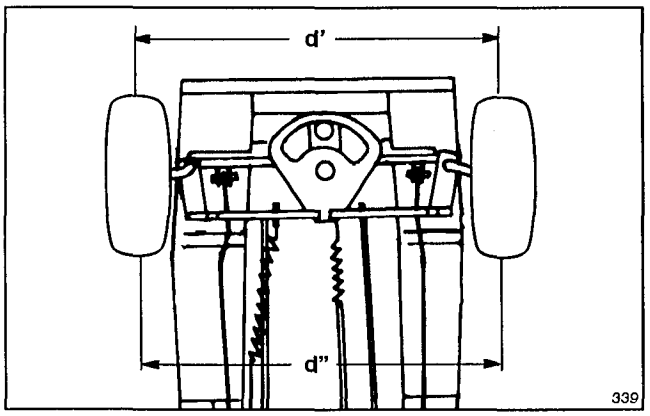

Figure 32

ADJUSTING BRAKE

Adjust brake pucks if the parking brake does not hold or braking power is not sufficient when brake pedal is depressed. The brake is located on the left side of the transaxle (Fig. 33).

1. Shut engine off and remove wire from spark plug.

2. Tighten locknut approximately 1/4 turn clockwise (Fig. 33).

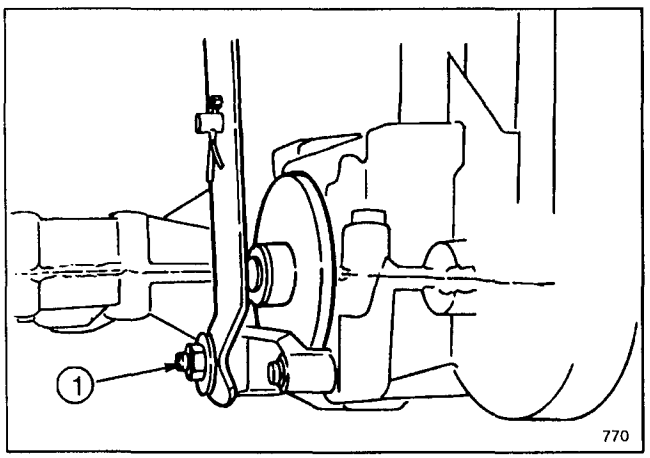

Figure 33

1. Locknut

3. Check operation of the brake by pushing rider: no brake drag should be evident. If drag is evident, rotate locknut an additional 1/8 turn counter-clockwise or until there is no drag.

LEVELING CUTTING UNIT

If mower doesn't cut level from side–to–side and cutting blade is not bent, level the cutting unit as follows:

1. Place rider on level surface, lock parking brake, shut off engine and remove key from ignition switch.

2. Raise seat or remove left side panel from rider.

3. Place height-of-cut lever in number 3 position and position cutter blade at a right angle to direction of rider travel.

4. Measure the blade tip height at one end of blade, rotate blade 180° and measure same blade tip at opposite side of rider. Measurement should be within 1/8 inch (3 mm) of one another.

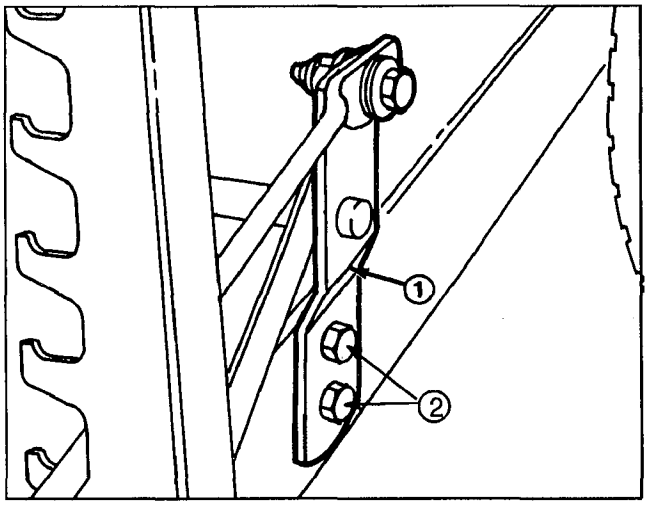

Figure 34

1. Height–of–cut support bracket *2. Capscrews*

5. If blade tip height is not within 1/8 inch (3 mm), level cutting unit by loosening height-of-cut support bracket capscrews and raising or lowering the bracket (Fig. 34).

6. Ensure blade tip height is within 1/8 inch (3 mm) and retighten capscrews.

MAINTENANCE

ADJUSTING GEAR SHIFT NEUTRAL POSITION

An adjustment to the gear shift rod may be required if gear shift will not go into neutral position.

1. Remove cotter pin from rod on right side of transaxle as viewed from the rear of the unit (Fig. 35).

2. Lift rod out of bracket hole (Fig. 35).

3. Rotate rod one complete turn clockwise and re-insert rod into hole in bracket.

4. Move gear shift selector into REVERSE position, then to NEUTRAL, then to first gear and then back to NEUTRAL.

5. Try rolling the rider backward and forward. If wheels turn freely and gear shift selector lines up with the NEUTRAL mark on the gear shift guide, the adjustment is correct.

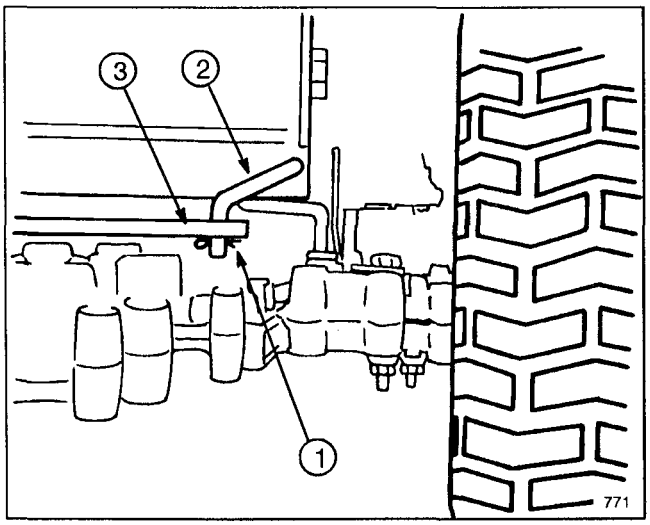

Figure 35

1. Cotter pin *2. Rod* *3. Bracket*

6. If adjustment is not correct, remove rod from hole in bracket again. Rotate rod two turns counter-clockwise and reinstall rod in hole in bracket.

7. Check adjustment again by repeating step 5.

8. When adjustment is correct, reinstall cotter pin in rod.

CHECKING INTERLOCK SYSTEM

The interlock switches in the electrical system prevent the engine from starting unless the gear shift is in neutral and deck engagement lever is disengaged. In addition, the engine will stop — because of a seat switch — if the operator gets off the seat when deck engagement lever is engaged or gear shift is in gear. To ensure interlock system is operating correctly, check it before each use of the rider.

1. Move gear shift into neutral.

2. Move deck engagement lever into ENGAGE. Sit on the seat and rotate ignition key to START. Engine should not crank; but if it does, the interlock system is malfunctioning and it must be repaired by an Authorized TORO Service Dealer. If engine does not crank, proceed to step 3.

3. Move deck engagement lever into DISENGAGE. Sit on the seat, depress the brake and clutch pedals, engage the parking brake and shift into gear. Rotate ignition key to START. Engine should not crank; but if it does, the interlock system is malfunctioning and must be repaired by an Authorized TORO Service Dealer. If engine does not crank, proceed to step 4.

4. Sit on the seat, move gear shift into neutral, deck engagement lever into DISENGAGE and ensure parking brake is engaged. Rotate ignition key to START. Engine should start and continue to run. Then engage deck engagement lever and carefully raise off the seat: the engine should stop. If engine does not stop running, shut engine off and have interlock system repaired by an Authorized TORO Service Dealer. If engine shuts off when you raised off the seat, the interlock system is functioning correctly and the rider can be operated safely.

WARNING

Do not operate the riding mower if the interlock system is malfunctioning. It is a safety device, designed to protect the operator.

PREPARING MOWER FOR STORAGE

1. For long term storage, either drain gasoline from fuel tank or use a fuel additive before storing. To drain gasoline, refer to Draining Gasoline From Fuel Tank, page 21. After fuel is drained, start engine and let it idle until all fuel is consumed and engine stops. Repeat the starting procedure two more times to ensure all gas is removed from the engine. If gasoline is not drained, gum–like varnish deposits will form and cause poor engine operation, even starting problems.

Fuel can be left in gas tank only if a fuel additive, such as Toro's Stabilizer/Conditioner, is added to gasoline before storing. Toro's Stabilizer/Conditioner is a petroleum distillate based conditioner/stabilizer. Toro does not recommend stabilizers with an alcohol base, such as ethanol, methanol or isopropyl. Use fuel additive in recommended quantities as specified on container.

Under normal conditions, fuel additives remain effective in fuel for 6–8 months.

2. Remove wire from spark plug and clean area around the plug so foreign matter cannot fall into cylinder when plug is removed. Next, remove plug from cylinder head and pour two tablespoons of engine oil into spark plug hole. Rotate engine by hand to distribute oil on inside of cylinder. Then reinstall spark plug and tighten it to 15 ft-lb (20.4 N·m). DO NOT REINSTALL WIRE ON SPARK PLUG.

3. Drain oil from crankcase: refer to Changing Crankcase Oil, page 19. However, do not fill crankcase with oil at this time.

4. Remove battery from chassis: refer to Activating and Charging Battery, page 11. Remove corrosion from battery terminal and wipe any grease and dirt off the battery case. Check level of electrolyte. If level is low, add distilled water to the affected cell. Fill only to the FULL line on side of battery. Reinstall filler caps.

5. Clean dirt and chaff from outside of cylinder, cylinder head fins, and blower housing. Also, remove grass clippings, dirt, and grime from external parts of rider, engine, shrouding, and top of mower housing.

6. Clean underside of mower housing: refer to Cleaning Underside of Mower Housing, page 24.

7. Check condition of blade: refer to Servicing Cutter Blade, page 23.

8. Check and tighten all cap screws, bolts, screws, nuts, and mating parts. If any part is damaged, repair or replace it.

9. Lubricate wheels and spindles with grease: refer to Grease Front Axle Spindles and Wheels, page 18.

10. Remove dust and dirt from air cleaner element: refer to Servicing Air Cleaner, page 20.

11. Touch up all rusted or chipped paint surfaces. Make sure to sand affected area before painting.

Note: TORO Re-Kote "touch-up" paint is available from any Authorized TORO Service Dealer.

12. Fill crankcase with oil: refer to Fill Crankcase With Oil, page 12.

13. Install the battery: refer to Activating and Charging Battery, page 11.

14. Store the rider in a clean, dry garage or storage area. Remove key from ignition switch and keep it in a memorable place. Cover the rider to protect it and keep it clean.

WIRING DIAGRAM – 832 REAR ENGINE RIDER

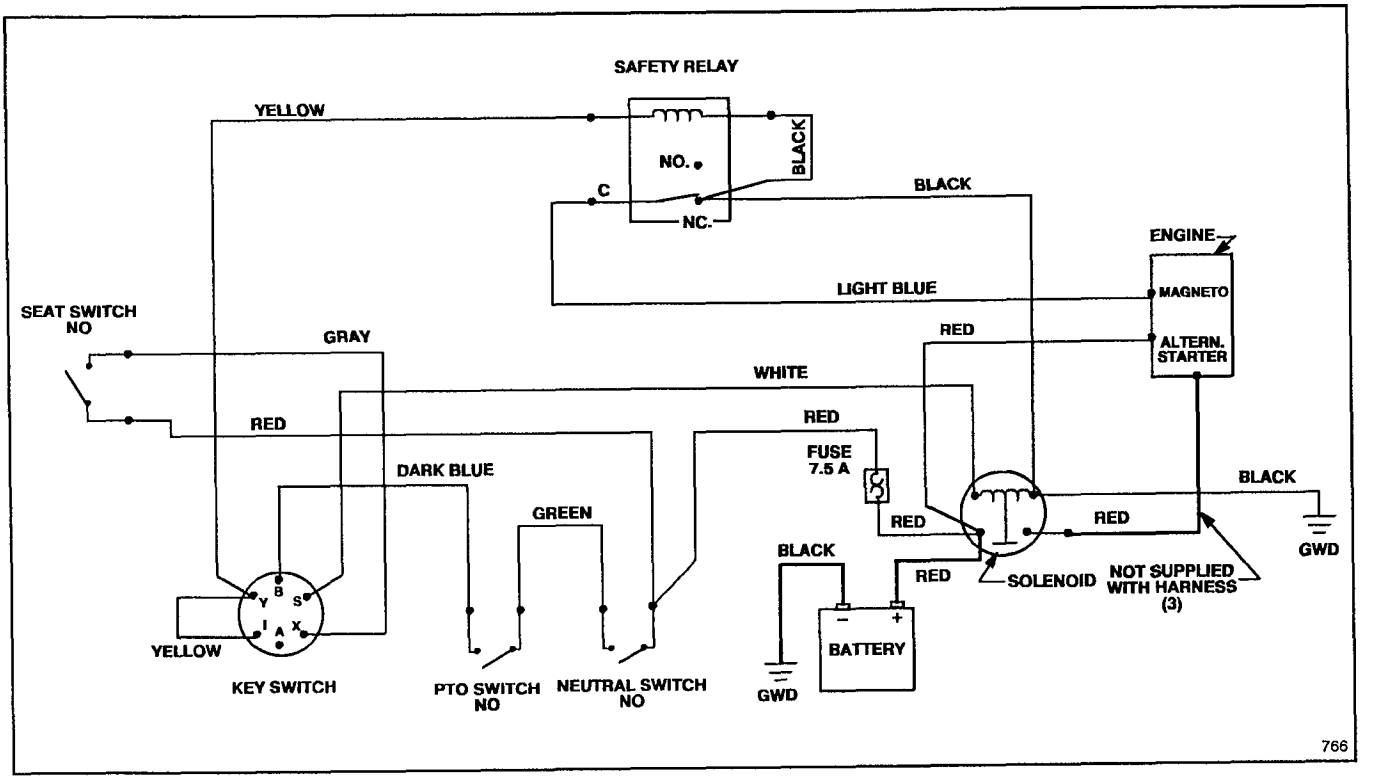

WIRING DIAGRAM – 1032 & 1232 REAR ENGINE RIDERS

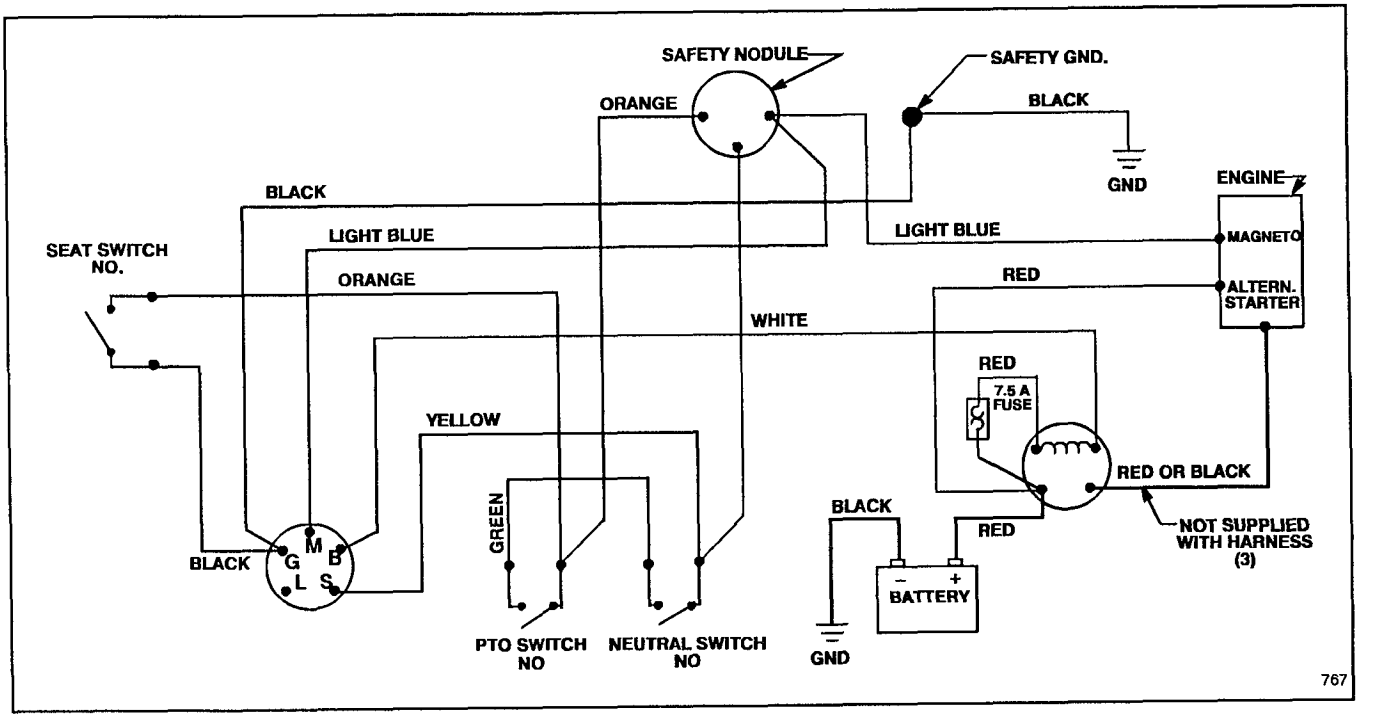

TROUBLE SHOOTING

Problem	Possible Causes	Corrective Action
Engine does not start, starts hard, loses power, or fails to keep running.	1. Gas tank is empty.	1. Fill fuel tank with gasoline.
	2. Battery is dead.	2. Charge the battery.
	3. Transaxle is in gear.	3. Shift transaxle into neutral.
	4. Deck engagement lever is in ENGAGE.	4. Move deck engagement lever into DISENGAGE.
	5. Spark plug is loose.	5. Tighten plug to 15 ft-lb (20.4 N-m).
	6. Wire is loose or disconnected from spark plug.	6. Install wire on spark plug.
	7. Spark plug gap is incorrect.	7. Set gap between electrodes at 0.030 of an inch (0.76 mm).
	8. Spark plug is pitted, fouled, or defective in some other way.	8. Install new, correctly gapped spark plug.
	9. Electrical connections are loose.	9. Check electrical system to ensure good contact.
	10. Carburetor is adjusted incorrectly.	10. Adjust the carburetor.
	11. Air cleaner is dirty.	11. Clean the air cleaner element.
	12. Vent hole in fuel tank cap is plugged.	12. Clean or replace the fuel cap.
	13. Dirt, water, or stale fuel in fuel system.	13. Have rider serviced by Authorized TORO Service Dealer.
	14. Module or switch is defective.	14. Have rider serviced by Authorized TORO Service Dealer.
Engine does not idle or idles poorly.	1. Air cleaner is dirty.	1. Clean air cleaner element.
	2. Idle speed is too low.	2. Adjust the carburetor.
	3. Dirt, water, or stale fuel is in the fuel system.	3. Have rider serviced by Authorized TORO Service Dealer.
	4. Spark plug is pitted, fouled or defective in some other way.	4. Install new, correctly gapped spark plug.

TROUBLE SHOOTING

Problem	Possible Causes	Corrective Action
Engine loses power.	1. Oil level in crank case is low.	1. Add oil to crank case.
	2. Cooling fins and air passages under engine blower housing are plugged.	2. Remove obstruction from cooling fins and air passages.
	3. Engine load is excessive.	3. Shift into lower gear to reduce load.
	4. Air cleaner is dirty.	4. Clean air cleaner element.
	5. Dirt, water, or stale fuel is in fuel system.	5. Have rider serviced by Authorized TORO Service Dealer.
	6. Carburetor is adjusted incorrectly.	6. Adjust the carburetor.
	7. Spark plug is pitted, fouled or defective in some other way.	7. Install new, correctly gapped spark plug.
Engine over heats.	1. Cooling fins and air passages under engine blower housing are plugged.	1. Remove obstruction from cooling fins and air passages.
	2. Carburetor is adjusted incorrectly.	2. Adjust the carburetor.
	3. Oil level in crankcase is low.	3. Add oil to crankcase.
	4. Engine load is excessive.	4. Shift into lower gear to reduce load.
Rider vibrates abnormally.	1. Engine mounting bolts are loose.	1. Tighten engine mounting bolts.
	2. Loose PTO pulley, idler pulley or blade pulley.	2. Tighten the appropriate pulley.
	3. Cutter blade is unbalanced, bent or loose.	3. Install new cutter blade.
	4. Bolt holding blade is loose.	4. Tighten bolt to 45-60 ft-lb (61-81 N-m).
	5. Drive pulley is damaged.	5. Replace drive pulley.
	6. Drive belt is damaged.	6. Replace belt.
Blade does not rotate.	1. Blade drive belt is worn, loose or broken.	1. Install new blade drive belt.
	2. Blade drive belt is off pulley.	2. Install blade drive belt and check idler pulley and belt guides for correct position.
Rider does not drive.	1. Traction belt is worn, loose or broken.	1. Install new traction drive belt.
	2. Transaxle does not shift gear.	2. Have rider serviced by Authorized TORO Service Dealer.
	3. Traction idler is adjusted incorrectly.	3. Adjust traction drive belt.

MAINTENANCE RECORD

Date	Hours Used	Oil Change	Air Cleaner Service	Lubrication	Sharpen Blade	Winter Storage	Spring Service	Spark Plug Gap

10° SLOPE CHART

Read all safety instructions on pages 3–6

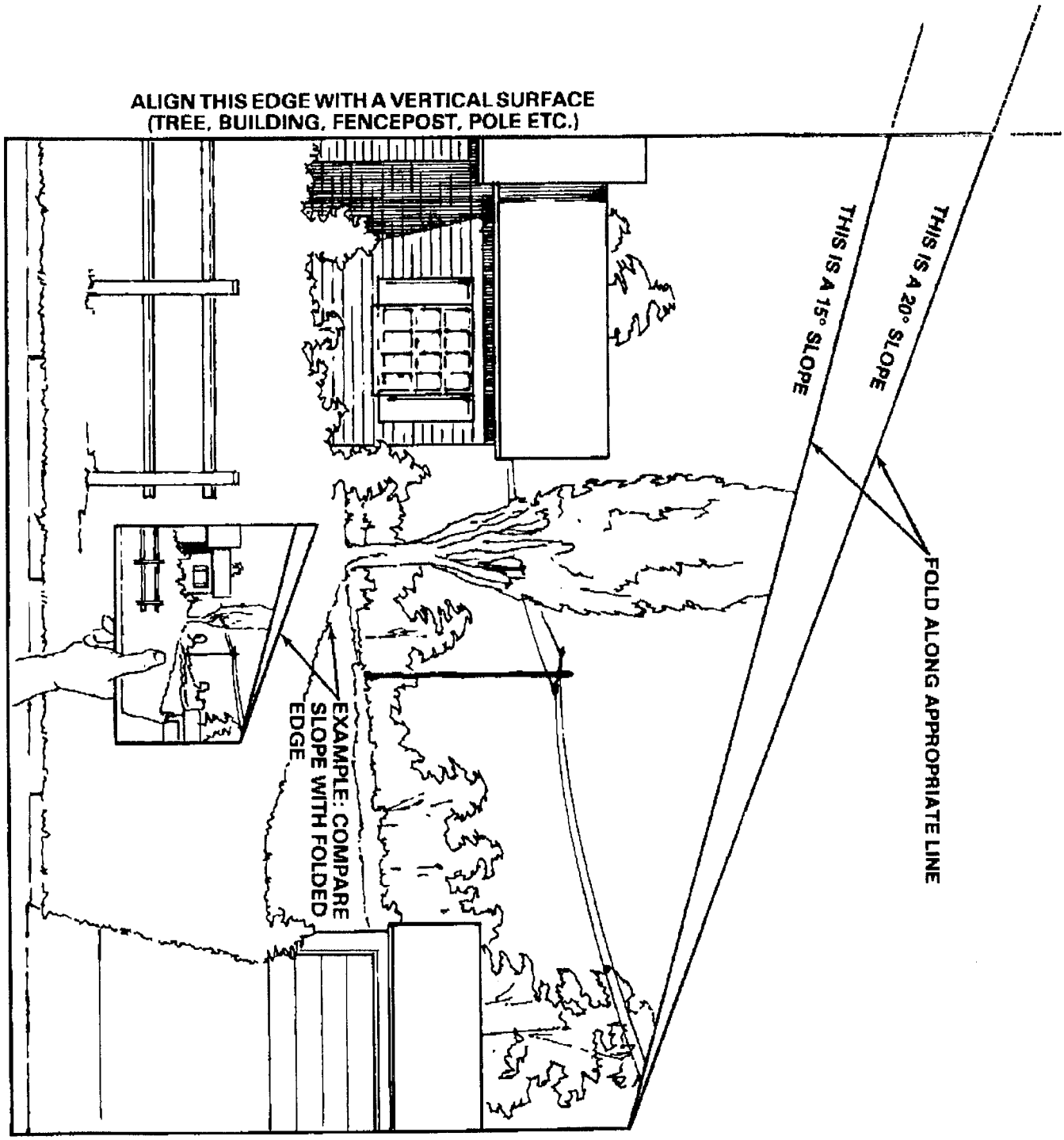


TORO®

TORO Consumer Products

THE TORO TOTAL COVERAGE GUARANTEE

A Full Two–Year Warranty
(Limited Warranty for Commercial Use)

What Is Covered By This Express Warranty?

The Toro Company promises to repair any TORO Product used for residential purposes if defective in materials or workmanship for a period of two years from the date of purchase. The cost of parts and labor are included, but the customer pays the transportation costs.

Transportation within a 15 mile radius of the servicing dealer is covered under this warranty for two–stage snowthrowers, walk behind debris equipment and all TORO Wheel Horse riding products. Walk power mowers, single stage snowthrowers, and other products not specifically covered, are excluded from the transportation coverage provided by this warranty.

What Products Are Covered By This Warranty?

This warranty applies to all gasoline powered Consumer Products (including TORO Wheel Horse riding products). ProLine riding products, wide area walk behind mowers and 21" Commercial mowers without blade stop controls are covered by separate warranty statements.

How About Commercial Use?

TORO Consumer Products used for commercial, institutional or rental use are covered by a limited warranty for the following time periods from the date of purchase:

Products	Warranty Period
• Garden Tractors	
Chassis	1 year limited warranty
Engine	2 year limited warranty
• 21" Commercial Duty Walk Mower with blade stop controls	1 year limited warranty
• Lawn Tractors, Yard Tractors, Rear Engine Riders, 3.0 and 3.5 HP Edgers, Straight Shaft Trimmers, and Backpack Blowers	90 day limited warranty
• All Others	45 day limited warranty

How Do You Get Warranty Service?

Should you feel your TORO product contains a defect in material or workmanship, contact the dealer who sold you the product or any Authorized TORO Service Dealer or TORO Master Service Dealer. The Yellow Pages of your telephone directory is a good reference source. The dealer will either arrange service at his/her dealership or recommend another Authorized Service Dealer who may be more convenient. You may need proof of purchase (copy of registration card, sales receipt, etc.) for warranty validation.

If for any reason you are dissatisfied with the Service Dealer's analysis of the defect in materials or workmanship or if you need a referral to a TORO Service Dealer, please feel free to contact us at the following address:

Toro Customer Service Department
8111 Lyndale Avenue South
Bloomington, MN 55420–1196
612–888–8801

What Must You Do To Keep The Warranty In Effect?

You must maintain your TORO Product by following the maintenance procedures described in the operator's manual. Such routine maintenance, whether performed by a dealer or by you, is at your expense.

What Does This Warranty Not Cover? and How Does Your State Law Relate To This Warranty?

There is no other express warranty except the TORO Starting Guarantee on GTS Engines. This express warranty does not cover:

- Cost of regular maintenance service or parts, such as filters, fuel, lubricants, tune–up parts, blade sharpening, brake and clutch adjustments.

- Any product or part which has been altered or misused or required replacement or repair due to normal wear, accidents, or lack of proper maintenance.

- Repairs necessary due to improper fuel, contaminants in the fuel system, or failure to properly prepare the fuel system prior to any period of non–use over three months.

- Pickup and delivery charges for distances beyond a 15 mile radius from an Authorized TORO Service Dealer (covered products only).

All repairs covered by this warranty must be performed by an Authorized TORO Service Dealer using Toro approved replacement parts.

Repair by an Authorized TORO Service Dealer is your sole remedy under this warranty.

The Toro Company is not liable for indirect, incidental or consequential damages in connection with the use of the TORO Products covered by this warranty, including any cost or expense of providing substitute equipment or service during reasonable periods of malfunction or non–use pending completion of repairs under this warranty. Some states do not allow exclusions of incidental or consequential damages, so the above exclusion may not apply to you.

This warranty gives you specific legal rights, and you may also have other rights which vary from state to state.

COUNTRIES OTHER THAN THE UNITED STATES OR CANADA

Customers who have purchased TORO products exported from the United States or Canada should contact their TORO Distributor (Dealer) to obtain guarantee policies for your country, province, or state. If for any reason you are dissatisfied with your Distributor's service or have difficulty obtaining guarantee information, contact the TORO importer. If all other remedies fail, you may contact us at The Toro Company.