Form No. 3375-905 Rev C

Grass Basket Kit

Reelmaster® 3550 Series 18 and 22-inch Cutting Unit

Model No. 03919

Model No. 03920

Model No. 03921

Installation Instructions

Note: Determine the left and right sides of the machine from the normal operating position.

Loose Parts

Use the chart below to verify that all parts have been shipped.

Procedure	Description	Qty.	Use
1	Basket guide (18 inch)	1	Install the basket guides and brackets.
	Basket cam lock (18 inch)	1	
	Basket cam lock (22 inch)	2	
	Roll pin (18 inch)	1	
	Roll pin (22 inch)	2	
	Washer	1	
	Left hand torsion spring (Gold)	1	
	Right hand torsion spring (Black)	1	
	Basket collar (18 inch)	1	
	Basket collar (22 inch)	2	
	Flat washer (.344 x .875)	2	
	Bolt (5/16 x 1-1/4 inches) (22 inch)	2	
	Bolt (5/16 x 1-1/4 inches) (18 inch)	1	
	Bolt (5/16 x 1/2 inch) (18 inch)	1	
	Plastic washer (18 inch)	1	
	Plastic washer (22 inch)	2	
	Spacer	2	
	Bolt (3/8–16 x 1-1/4 inch)	2	
2	Cutoff bar	1	Install the cutoff bar.
	Bolt (1/4 x 1–3/4 inches)	4	
	Locknut (1/4 inch)	4	
3	Basket assembly	1	Mount the basket assembly to the cutting unit.
4	No parts required	–	Adjust the basket position.
5	Operator's Manual	1	Read the documentation and store it in a safe location.
	Parts Catalog	1	

© 2013—The Toro® Company
8111 Lyndale Avenue South
Bloomington, MN 55420

Register at www.Toro.com.

CE

Original Instructions (EN)
Printed in the USA.
All Rights Reserved

3375-905 C

1

Installing the Basket Guides and Brackets

Parts needed for this procedure:

1	Basket guide (18 inch)
1	Basket cam lock (18 inch)
2	Basket cam lock (22 inch)
1	Roll pin (18 inch)
2	Roll pin (22 inch)
1	Washer
1	Left hand torsion spring (Gold)
1	Right hand torsion spring (Black)
1	Basket collar (18 inch)
2	Basket collar (22 inch)
2	Flat washer (.344 x .875)
2	Bolt (5/16 x 1-1/4 inches) (22 inch)
1	Bolt (5/16 x 1-1/4 inches) (18 inch)
1	Bolt (5/16 x 1/2 inch) (18 inch)
1	Plastic washer (18 inch)
2	Plastic washer (22 inch)
2	Spacer
2	Bolt (3/8–16 x 1-1/4 inch)

Procedure

1. Remove the cutting units from the cartons. Assemble and adjust them per the *Operator's Manual* for the cutting unit.
2. Use Figure 1 and Figure 2 to determine the locations at which the basket guides or basket cam locks must be mounted to cutting unit carrier frames.

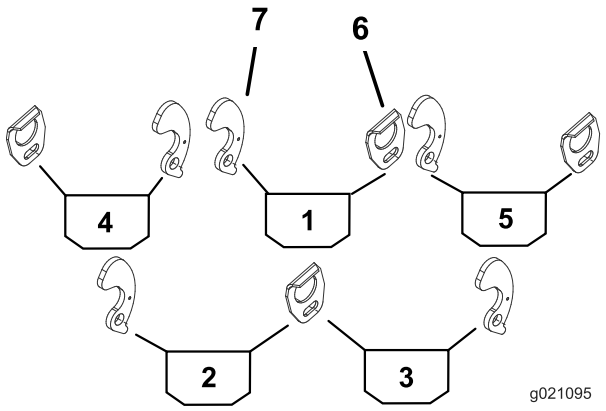

Figure 1
18 inch cutting unit

1. Center basket
2. Left rear basket
3. Right rear basket
4. Left front basket
5. Right front basket
6. Basket guide
7. Basket cam lock

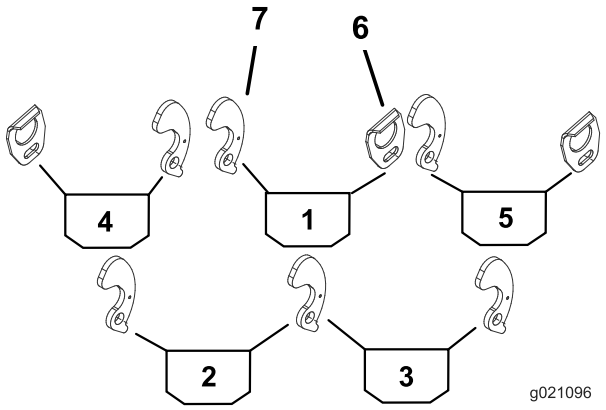

Figure 2
22 inch cutting unit on rear (items 2 and 3)

1. Center basket
2. Left hand rear basket
3. Right hand rear basket
4. Left hand front basket
5. Right hand front basket
6. Basket guide
7. Basket cam lock

3. Mount a basket guide to the appropriate side of each cutting unit carrier frame (Figure 1) with a bolt (5/16 x 1/2 inch) and a flat washer (.344 x .875).

Note: Position the components as shown in Figure 3.

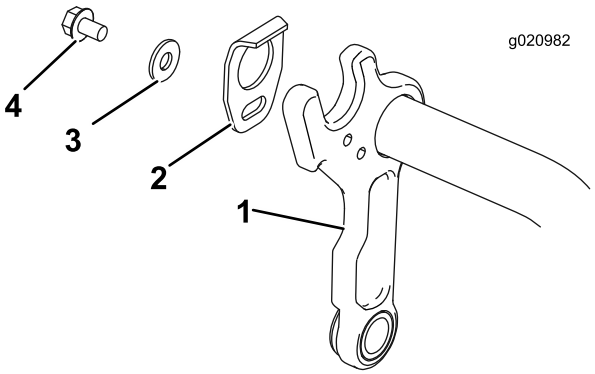

Figure 3

1. Carrier frame
2. Basket guide
3. Flat washer (.344 x .875)
4. Bolt (5/16 x 1/2 inch)

4. Remove the existing nut, flat washer, and spacer, discarding the spacer and retaining the nut and flat washer (Figure 4).

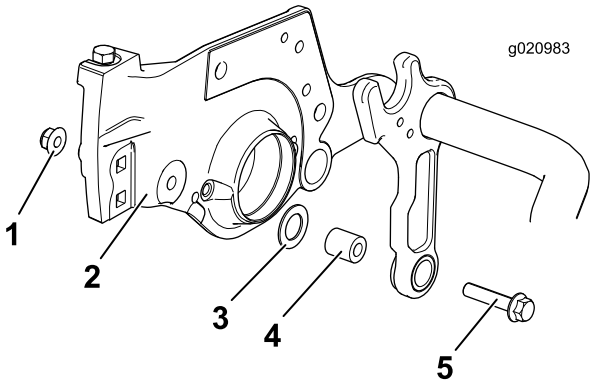

Figure 4

1. Existing nut
2. Side plate
3. Existing flat washer
4. Existing spacer
5. Existing bolt

5. Install a bolt (3/8–16 x 1-1/4 inch) and a new spacer, and secure them using the nut provided in the kit (Figure 5).

Note: Ensure that the flat washer is between the frame and the side plate, and that the flat washer is placed around the spacer shown in Figure 5.

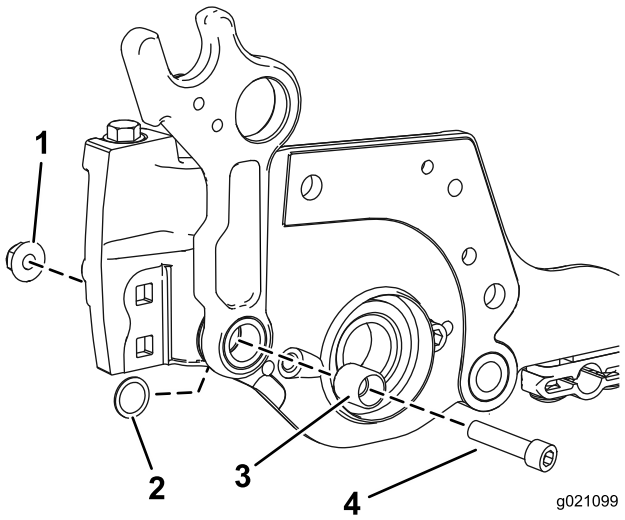

Figure 5

1. Nut
2. Flat washer
3. Spacer
4. Bolt (3/8–16 x 1–1/4)

6. Install a roll pin into the lower hole in the appropriate side of each cutting unit carrier frame (Figure 6).

Note: The end of the roll pin should be flush with the inner side of the carrier frame.

7. On the side of the carrier frame on which the roll pin is installed, mount a plastic washer, basket bracket, torsion spring, basket collar, flat washer (.344 x .875) and bolt (5/16 x 1-1/4 inches) (Figure 6). Position the longer leg of the spring around the front of the carrier frame, and insert the shorter, rear leg of the spring into the hole in the basket bracket.

Note: The **gold** torsion spring is for the **left** side of the carrier frame , and the **black** spring is for the **right** side of the carrier frame.

Important: Ensure that the plastic washer (item 3) is centered correctly on the basket collar (item 6) otherwise the cam lock may not lock properly and may stick when rotated. If installed correctly, the plastic washer will rotate smoothly when the cam lock is rotated back and forth.

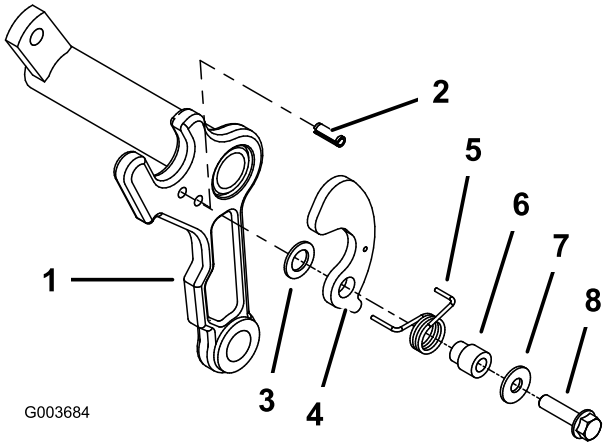

Figure 6

1. Carrier frame
2. Roll pin
3. Plastic washer
4. Basket bracket
5. Torsion spring (Left shown) (Gold color)
6. Basket collar
7. Flat washer (.344 x .875)
8. Bolt (5/16 x 1-1/4 inches)

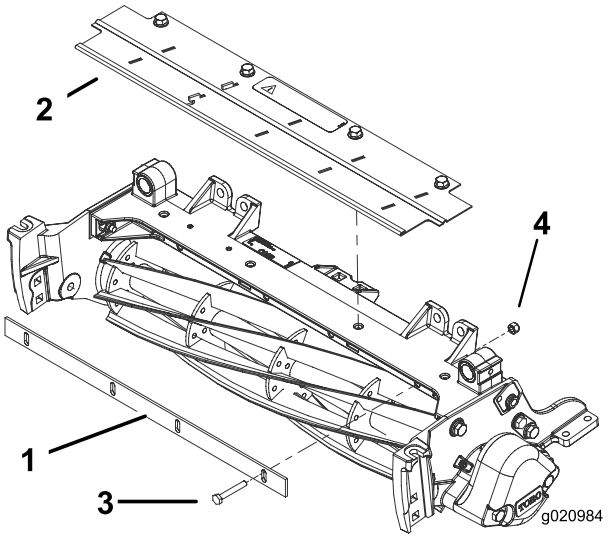

Figure 7

1. Cutoff bar
2. Grass shield
3. Deflector
4. Bolt (1/4 x 1–3/4 inches)
5. Locknut (1/4 inch)

2

Installing the Cut-off Bar

Parts needed for this procedure:

1	Cutoff bar
4	Bolt (1/4 x 1–3/4 inches)
4	Locknut (1/4 inch)

Procedure

1. Loosely mount the cutoff bar to the cutting unit frame with 4 bolts (1/4 x 1–3/4 inches) and 4 locknuts (1/4 inch) (Figure 7).
2. Insert a .060 feeler gauge between the top of the reel and the bottom of the cutoff bar to check clearance.

   Note: Make sure the bar and reel are equal distance apart across the full length of the reel. The cutoff bar must not contact the reel during operation.
3. Tighten the bolts and locknuts (Figure 7).

3

Mounting the Basket Assembly to the Cutting Unit

Parts needed for this procedure:

1	Basket assembly

Procedure

Mount a basket to each cutting unit carrier frame by inserting the basket mounting pin into the basket guide bracket and pressing the opposite mounting pin into the cam lock basket bracket (Figure 8).

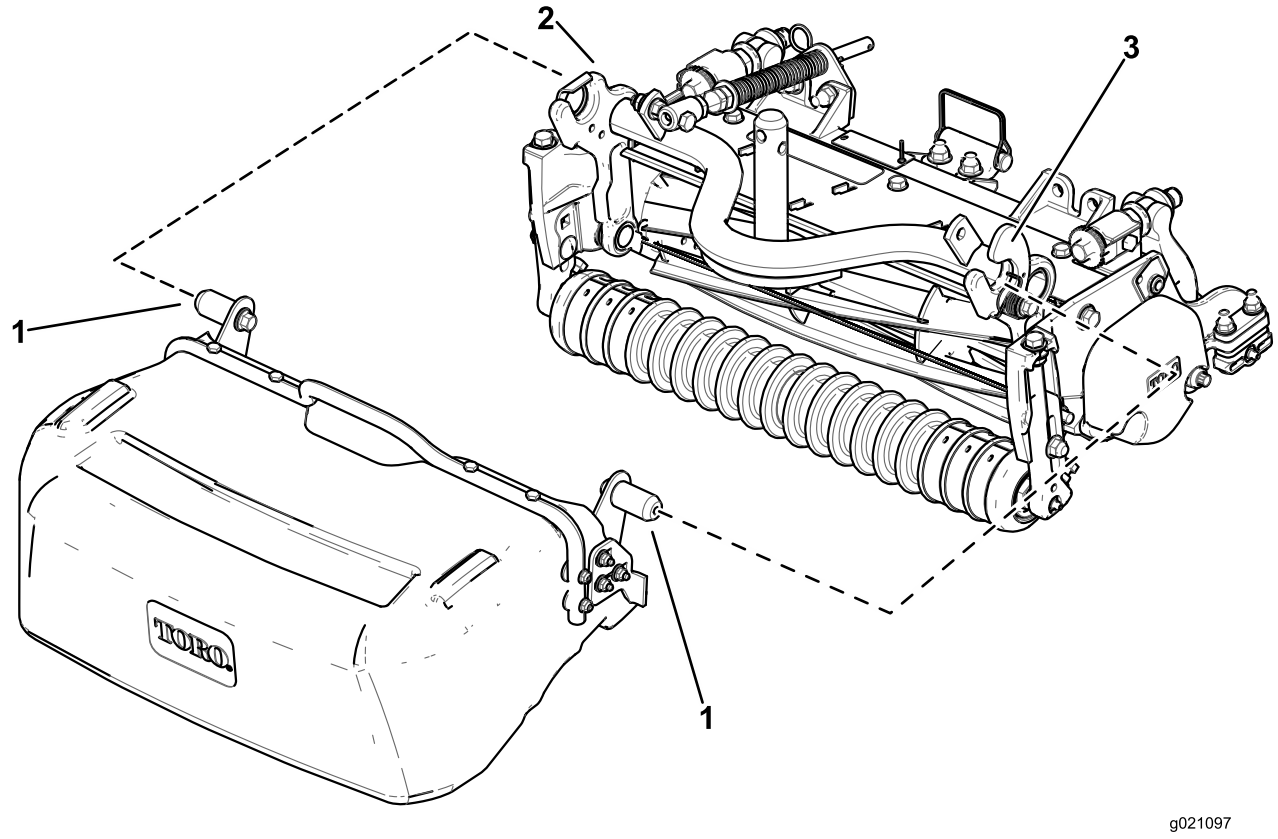

Figure 8

1. Basket mounting pin
2. Basket guide
3. Basket cam lock

Rear basket installation:

1. Slide the basket vertically under the machine with the open end of the basket facing upwards just past the inside of the tire (Figure 9A).
2. Insert the basket mounting pin into the basket guide stop (Figure 9B).
3. Rotate the back side of the basket upwards so that the inside basket stop on the basket is in front of the carrier frame stop (Figure 9C).
4. Press the opposite mounting pin into the basket cam lock (Figure 9D).

Rear basket removal:

1. Remove the basket mounting pin from the basket cam lock by moving the mounting pin up and slightly back (Figure 9C).
2. Pull the basket slightly towards you to remove the inside basket mounting pin from the cutting unit (Figure 9B).
3. Rotate the back of basket down and move the basket inwards toward the center of the machine (Figure 9A).
4. Pull the basket out from under the machine (Figure 9A).

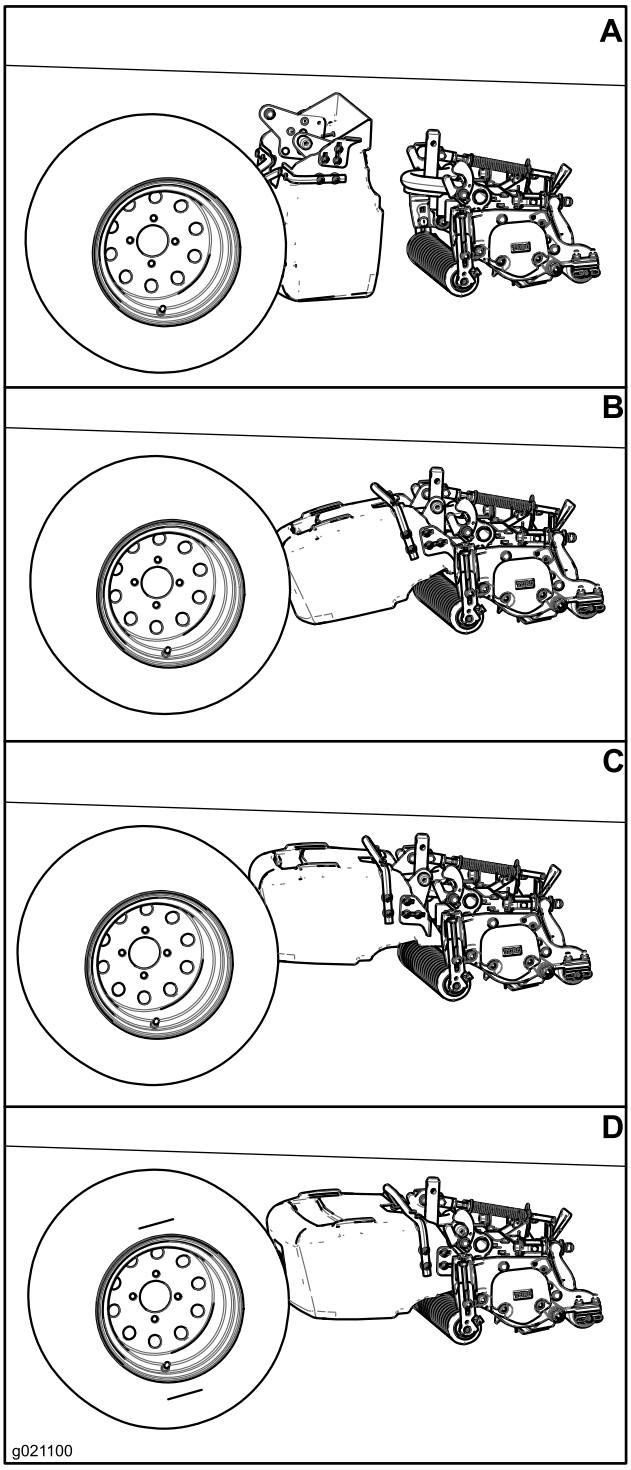

Figure 9

4

Adjusting the Basket Position

No Parts Required

Procedure

Make sure that the basket is parallel to the cutting unit or slightly raised in front with a minimum clearance of .250 inches (6 mm) between the lip of the basket and the reel, and a minimum clearance of .250 inches (6 mm) between the front roller and the bottom of the basket. To adjust the basket position, proceed as follows:

- On each side of the basket, loosen the carriage bolt nuts securing the basket stop brackets to the basket (Figure 10).
- Position the basket so that it is parallel to the cutting unit with a minimum clearance of .250 inches (6 mm) between the lip of the basket and the reel (Figure 10).
- On each side of the basket, adjust the basket stop brackets so that they each contact a carrier frame arm.
- Tighten the carriage bolt nuts to secure the basket position.

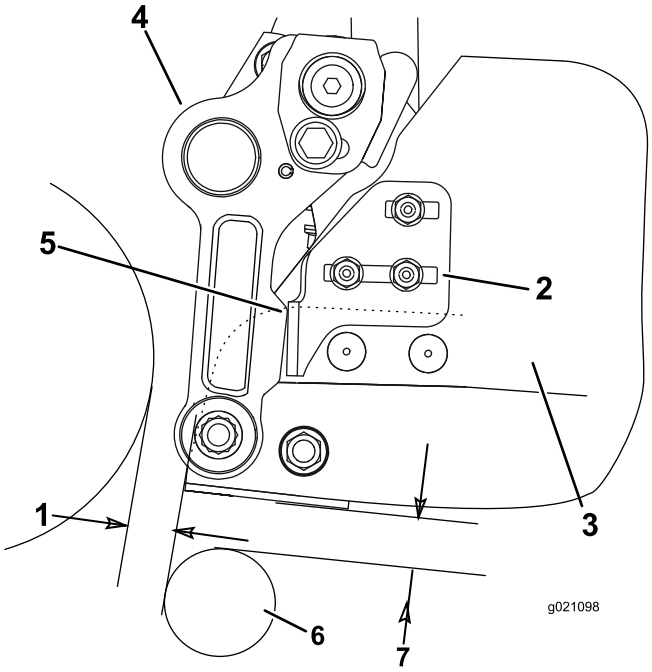

Figure 10

1. .250 inch (6 mm) clearance
2. Basket stop bracket
3. Basket
4. Carrier frame arm
5. Contact point
6. Roller
7. .250 inch (6 mm) clearance

5

Reading/Storing the Documentation

Parts needed for this procedure:

1	*Operator's Manual*
1	*Parts Catalog*

Procedure

1. Read the documentation.
2. Store the documentation in a safe place.

Declaration of Incorporation

The Toro Company, 8111 Lyndale Ave. South, Bloomington, MN, USA declares that the following unit(s) conform(s) to the directives listed, when installed in accordance with the accompanying instructions onto certain Toro models as indicated on the relevant Declarations of Conformity.

Model No.	Serial No.	Product Description	Invoice Description	General Description	Directive
03919	None and Up	Grass Basket Kit for Reelmaster 3550 Series 18-inch Cutting Unit	RM3550 GRASS BASKET KIT-(18")	Grass Basket Kit	2000/14/EC 2006/42/EC
03920	None and Up	Grass Basket Kit for Reelmaster 3550 Series 22-inch Cutting Unit	RM3550 GRASS BASKET KIT-(22")	Grass Basket Kit	2000/14/EC 2006/42/EC
03921	None and Up	Grass Basket Kit for Reelmaster 3550 Series 18-inch Cutting Unit	RM3550 GRASS BASKET KIT-(18")	Grass Basket Kit	2000/14/EC 2006/42/EC

Relevant technical documentation has been compiled as required per Part B of Annex VII of 2006/42/EC.

We will undertake to transmit, in response to requests by national authorities, relevant information on this partly completed machinery. The method of transmission shall be electronic transmittal.

This machinery shall not be put into service until incorporated into approved Toro models as indicated on the associated Declaration of Conformity and in accordance with all instructions, whereby it can be declared in conformity with all relevant Directives.

Certified:



David Klis
Sr. Engineering Manager
8111 Lyndale Ave. South
Bloomington, MN 55420, USA
May 29, 2012

EU Technical Contact:

Peter Tetteroo
Toro Europe NV
B-2260 Oevel-Westerloo
Belgium

Tel. 0032 14 562960
Fax 0032 14 581911