FORM NO. 3315–152

TORO®

MODEL NO. 16400 – 2000001 & UP
MODEL NO. 16401 – 2000001 & UP

OPERATOR'S MANUAL

21" SIDE DISCHARGE MOWER

⚠ SAFETY INSTRUCTIONS

This mower "meets or exceeds CPSC blade safety requirements for walk behind rotary mowers" and the B71.1–1990 specifications of the American National Standards Institute. However, improper use or maintenance by the operator or owner can result in injury. To reduce the potential for injury, comply with these safety instructions and always pay attention to the safety alert symbol⚠ which means CAUTION, WARNING or DANGER. Failure to comply with these instructions may result in personal injury.

WARNING: Engine exhaust contains carbon monoxide which is an odorless, deadly poison. Carbon monoxide is also known to the State of California to cause birth defects. Do not run engine indoors or in an enclosed area.

BEFORE OPERATING

1. Read this manual carefully before operating the mower. Become familiar with the controls and proper use of the mower. Never allow children to operate the mower or adults to operate it without proper instructions.

2. Keep everyone, especially children and pets, away from area of operation. Thoroughly inspect area where mower will be used and remove sticks, stones, wire, and debris.

3. Wear long pants and substantial shoes. Do not operate mower while wearing open–toed shoes, jewelry, loose clothing or when barefoot.

4. Always wear safety glasses or eye shields during operation to protect eyes from foreign objects that may be thrown from the machine.

5. Check fuel level before starting engine. Do not fill fuel tank indoors, when the engine is running, or until engine cools for several minutes after running. Wipe up spilled gasoline before starting engine.

6. Keep all guards, shields, safety devices and optional grass catcher in place. Repair or replace damaged parts, including decals. Check all safety devices before each use.

7. Engine and blade are designed to stop when engine kill control bar is released. Ensure engine kill control bar and brake function properly before each use of mower.

WHILE OPERATING

8. Do not run engine indoors.

9. Always maintain secure footing. Keep a firm grip on the handle and walk; never run. Never operate mower in wet grass. Mow only in daylight or in good artificial light.

10. Mow across the face of slopes; never up and down. Use extreme caution when changing direction on slopes. Do not mow excessively steep slopes.

11. Keep face, hands, and feet away from the mower housing and cutter blade when the engine is running. Stay behind the handle until the engine stops and keep clear of discharge opening at all times.

12. During operation, grass deflector or complete bagging assembly must be installed on mower.

13. Shut engine off and wait for all moving parts to stop before removing grass bag.

14. Since the blade rotates for a few seconds after the control bar is released, stay behind the handle until all moving parts stop.

15. After striking a foreign object or if mower vibrates abnormally, stop engine and remove wire from spark plug. Check mower for damage and make all repairs before using mower again.

16. Stop the engine before adjusting the height–of–cut.

17. Stop the engine when crossing a gravel driveway, road or sidewalk.

18. Stop engine before leaving the operator's position—behind the handle. Disconnect wire from spark plug if mower will be unattended.

19. Do not touch muffler or engine while they are running or shortly after they have stopped because muffler and engine will be hot enough to cause a burn.

20. Refuel only after engine is cool.

MAINTENANCE

21. Perform only those maintenance instructions described in this manual. If major repairs are ever needed or if assistance is desired, contact your local Authorized TORO Service Dealer.

©The Toro Company–1991

SAFETY INSTRUCTIONS

22. Before mower is cleaned, inspected, serviced, or adjusted, stop engine and disconnect wire from spark plug. Keep wire away from plug to prevent accidental starting.

23. To ensure the mower is in safe operating condition, frequently check and keep all nuts, bolts, and screws tight. Ensure blade bolt is tightened to proper specifications.

24. To reduce fire hazard, keep engine free of excessive grease, grass, leaves, and accumulation of dirt.

25. Check optional grass catcher bag frequently for wear or deterioration. If worn, replace with a new bag for your protection.

26. Allow engine to cool before storing mower in any enclosure. Do not store mower near any open flame or where gasoline fumes may be ignited by a spark.

27. Do not overspeed the engine by changing governor settings.

28. At the time of manufacture, the mower conformed to the safety standards in effect for rotary mowers. To ensure best performance and continued safety certification of the mower, use genuine TORO replacement parts and accessories. Replacement parts and accessories made by other manufacturers may result in non–conformance with the safety standards, and that could be dangerous.

SAFETY DECALS AND INSTRUCTIONS

Safety decals and instructions are easily visible to the operator and are located near any area of potential danger. Replace any decal that is damaged or lost.

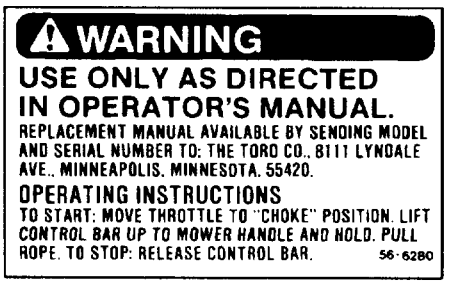

ON UPPER HANDLE
(Part No. 56–6280



ON MOWER DEFLECTOR
(Part No. 39–5770)

TABLE OF CONTENTS

	Page
Set–Up Instructions	3
Before Operating	4
Operating Instructions	5
Maintenance	6
Servicing Air Cleaner	6
Replacing Spark Plug	7
Draining Gasoline	7
Changing Crankcase Oil	7
Inspecting/Removing/Sharpening Blade	8
Lubrication	9
Checking Transmission Oil Level	9
Adjusting Wheel Drive Control	10
Adjusting Blade Brake	10
Cleaning Mower Housing	10
Preparing Mower For Storage	11
Optional Equipment	11
Toro Service Support	11
Product Identification	11
The Toro Total Coverage Guarantee	

SET–UP INSTRUCTIONS

INSTALL HANDLES AND STARTER ROPE

1. LOWER HANDLES (Fig. 1)—Make sure control cables are between lower handle tubes. Push ends of handle together and install on pivot pins. Bend handle latches slightly inward. Move handle and latches backward until handle studs snap into center hole. Push hair pin cotters through holes in pivot pins.

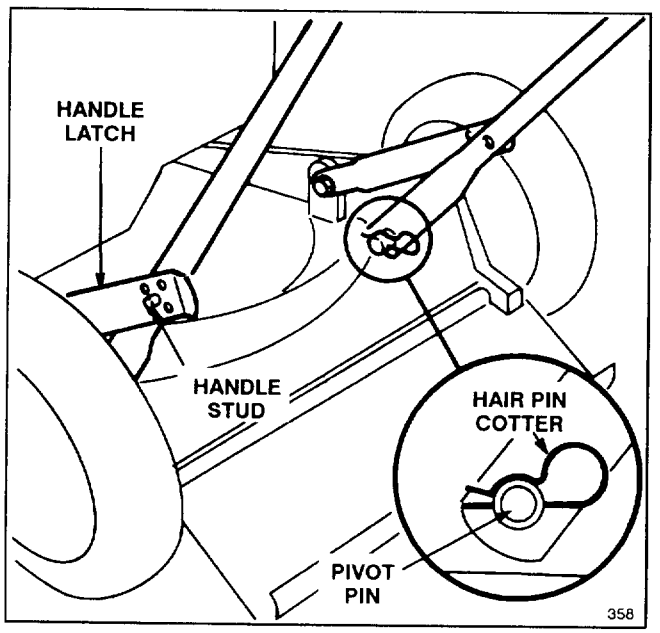

Figure 1

2. UPPER HANDLE (Fig. 2)—Secure upper and lower handle in place with handle bolts and locknuts. Control cables must be in back of lower handle cross member. Secure control cables in position with cable ties.

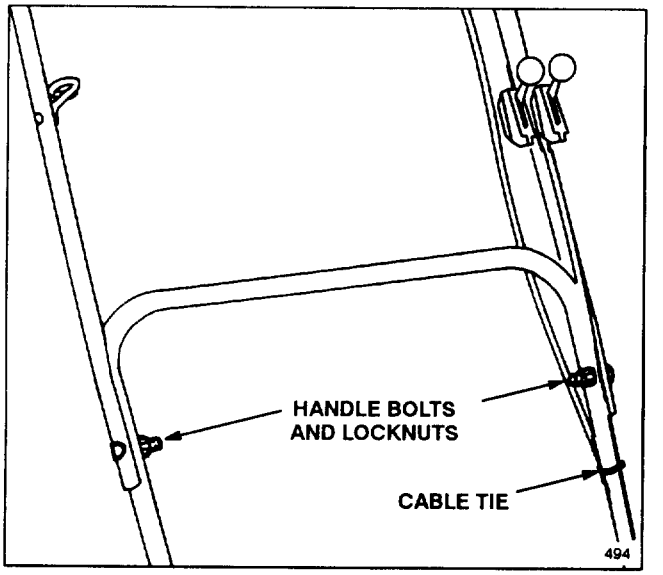

Self–propelled model shown

Figure 2

3. STARTER ROPE (Fig. 3)—Pull starter rope through opening in rope guide. By squeezing control bar (Fig. 6) against handle, blade brake will release and allow rope to be pulled easily up to rope guide.

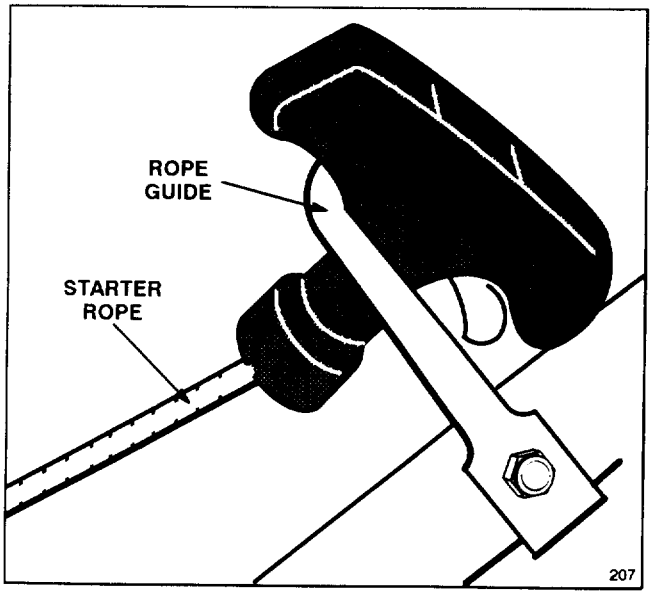

Figure 3

BEFORE OPERATING

FILL CRANKCASE WITH OIL

Initially, crankcase must be filled with 20 ounces (0.6 L) of SAE 30 oil. Use of multi–viscosity oils (10W30, etc.) above 40°F (4°C) will result in high oil consumption and possible engine damage. Use any high quality detergent oil having the American Petroleum Institute (API) "service classification"—SE, SF or SG.

Before each use, ensure oil level is between FULL and ADD marks on dipstick (Fig. 4). Add oil if level is at or below ADD mark.

1. Position mower on level surface and clean around oil dipstick.

2. Remove dipstick by rotating cap counterclockwise 1/4 turn.

3. Wipe dipstick and insert it into filler neck. Rotate cap clockwise 1/4 turn. Then remove dipstick and check level of oil on side of dipstick with FULL and ADD marks (Fig. 4). If level is low, add only enough oil to raise level to FULL mark on dipstick. **DO NOT FILL ABOVE FULL MARK BECAUSE ENGINE COULD BE DAMAGED WHEN STARTED. POUR OIL SLOWLY.**

4. Insert dipstick into filler neck and rotate cap clockwise 1/4 turn to lock.

Note: Check oil level each time mower is used or after every 5 operating hours. Initially, change oil after the first 2 hours of operation; thereafter, change oil after every 25 hours of operation. More frequent oil changes are required in dusty or dirty conditions.

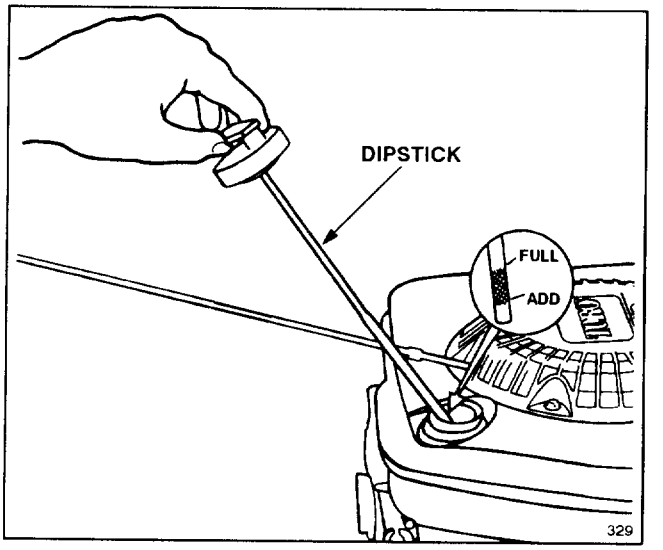

Figure 4

⚠ WARNING

DANGER: Gasoline is extremely flammable and explosive under certain conditions. Do not smoke when handling fuel and keep fuel far away from open flames and sparks. Never buy more than a 30 day supply of gasoline. Store it in an approved container. Keep gasoline out of reach of children.

Refuel outdoors and only when engine is cold. Do not fill tank full. Fill tank to within 1/4" to 1/2" (6 to 13 mm) from top of tank, not into filler neck. This space is for expansion of fuel. Use funnel or spout to prevent spilling. Wipe up any spilled gas.

FILL FUEL TANK WITH GASOLINE

Note: The Toro Company strongly recommends the use of fresh, clean, UNLEADED regular grade gasoline in Toro gasoline powered products. Unleaded gasoline burns cleaner, extends engine life, and promotes good starting by reducing the build–up of combustion chamber deposits. Leaded gasoline can be used if unleaded is not available.

Toro also recommends that Toro Stabilizer/Conditioner be used regularly in all Toro gasoline powered products during operation and storage seasons. Toro Stabilizer/Conditioner cleans the engine during operation and prevents gum-like varnish deposits from forming in the engine during periods of storage.

1. Clean around fuel tank cap and remove cap from tank. Using unleaded gasoline, fill fuel tank to within 1/4" to 1/2" (6 to 13 mm) from top of tank, not into filler neck. Do not fill tank full.

2. Install fuel tank cap and wipe up any spilled gasoline.

IMPORTANT: DO NOT MIX OIL WITH THE GASOLINE. NEVER USE METHANOL, GASOLINE CONTAINING METHANOL, GASOHOL CONTAINING MORE THAN 10% ETHANOL OR WHITE GAS BECAUSE ENGINE FUEL SYSTEM DAMAGE COULD RESULT.

DO NOT USE FUEL ADDITIVES OTHER THAN THOSE MANUFACTURED FOR FUEL STABILIZATION DURING STORAGE SUCH AS TORO'S STABILIZER/CONDITIONER OR A SIMILAR PRODUCT. TORO'S STABILIZER/CONDITIONER IS A PETROLEUM DISTILLATE BASED STABILIZER/CONDITIONER. TORO DOES NOT RECOMMEND STABILIZERS WITH AN ALCOHOL BASE SUCH AS ETHANOL, METHANOL OR ISOPROPYL. STABILIZERS SHOULD NOT BE USED TO TRY TO ENHANCE THE POWER OR PERFORMANCE OF MACHINE.

OPERATING INSTRUCTIONS

OPERATING TIPS

1. BEFORE OPERATING—Ensure engine brake, self–propelled drive (self–propelled model only), and control bar function properly. When control bar is released, blade and engine are designed to stop.

2. CUTTING AND BAGGING—To improve quality of cut, discharge clippings toward previously cut area. Best results are achieved when engine is running at maximum speed and only about 1/3 of the grass blade is cut. If long grass must be cut, use highest height–of–cut setting for first mowing. Then recut the grass at a more normal setting. If too long of grass is cut, mower may plug and cause engine to stall.

3. SHARP BLADE—Begin each cutting season with a sharp blade. Periodically file down nicks.

⚠ DANGER

- **Grass clippings and other objects can be thrown from an open discharge tunnel.**
- **Objects thrown with enough force could cause serious personal injury or death to operator or bystander.**
- **Never raise side discharge deflector on mower when engine is running.**

⚠ DANGER

- **A worn grass bag could allow small stones and other similar debris to be thrown in operator's or bystanders direction.**
- **Thrown objects can cause serious personal injury or death to operator or bystanders.**
- **Check the grass bag frequently. If it damaged, install a new genuine TORO replacement bag that has this or a similar warning.**

STARTING, STOPPING, AND SELF–PROPELLING (self–propelled model only)

1. CONTROLS (Fig. 5–6)—Wheel drive control (self–propelled model only), throttle/choke, control bar, and fingertip starter are on upper handle.

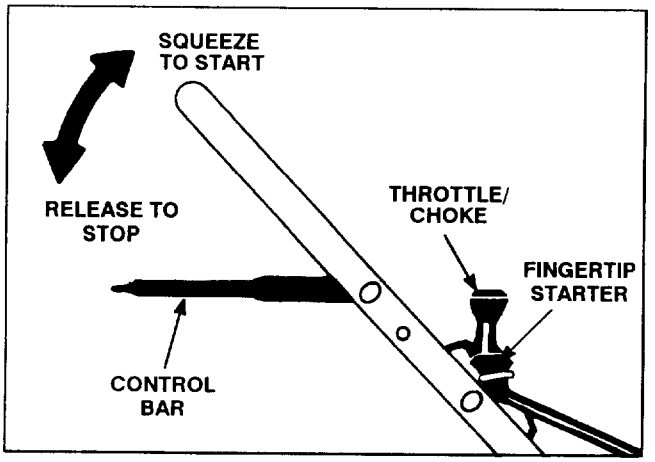

Hand push model 16400

Figure 5

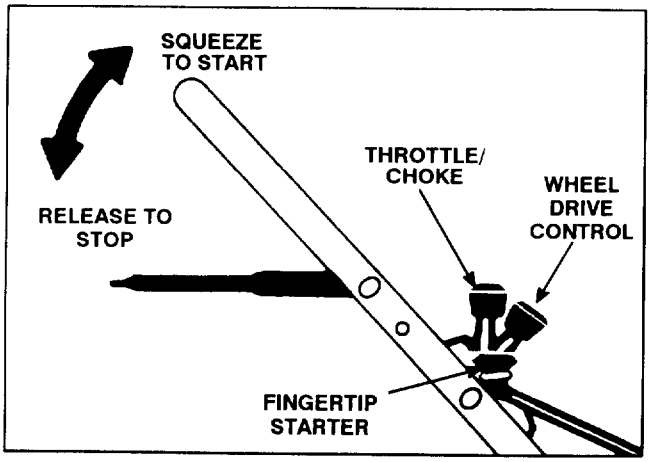

Self–propelled model 16401

Figure 6

2. Push spark plug wire onto spark plug (Fig. 11).

3. Move wheel drive control to DISENGAGE (self–propelled model only).

4. STARTING—Move throttle to ⌐ (CHOKE). Hold control bar against handle. Pull fingertip starter out until positive engagement results (Fig. 5 & 6); then pull vigorously to start the engine. Regulate throttle as desired when engine starts.

5. STOPPING—Release control bar to stop engine and blade. On self–propelled model, move wheel drive control to DISENGAGE position. Pull wire off spark plug if mower will be unattended or not used.

6. SELF–PROPELLING (self–propelled model only)—Move wheel drive control to ENGAGE. Front wheels will now drive mower. For maneuvering and making turns, push down on handle to raise front wheels slightly off grass. Move control to DISENGAGE to stop front wheel drive.

OPERATING INSTRUCTIONS

ADJUSTING HEIGHT–OF–CUT

Five notches cast into the housing represent each graduated height-of-cut setting (Fig. 7).

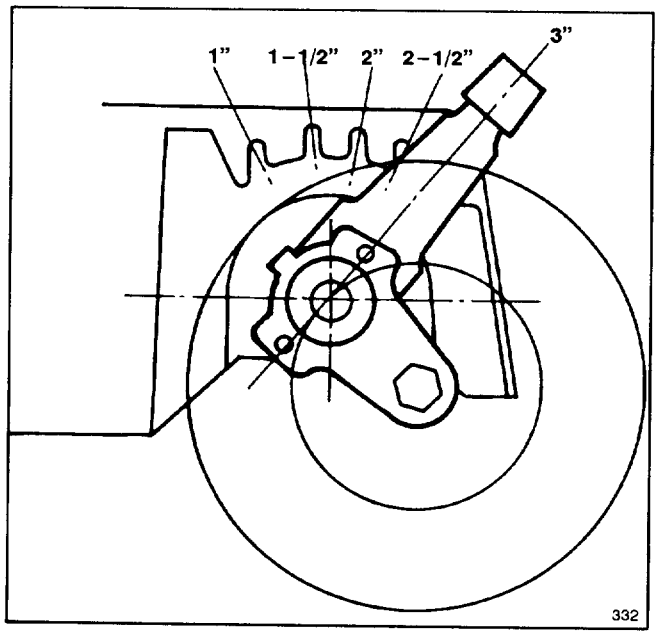

Figure 7

⚠ DANGER

- **Adjusting height–of–cut levers could bring hands into contact with moving blade.**
- **Contact with blade could cause serious personal injury.**
- **Do not adjust the height–of–cut settings when engine is running and blade is rotating.**
- **Do not put fingers under housing to lift mower when adjusting height–of–cut levers.**

1. Stop the engine and pull the wire off the spark plug (Fig. 11).

2. For easier adjustment, lift housing up so wheel is off ground. **Do not put fingers under housing when lifting.** Squeeze adjusting lever toward wheel (Fig. 8) and move it to the desired setting. Ensure pin on adjusting lever engages notch in housing. Adjust all wheels to the same height.

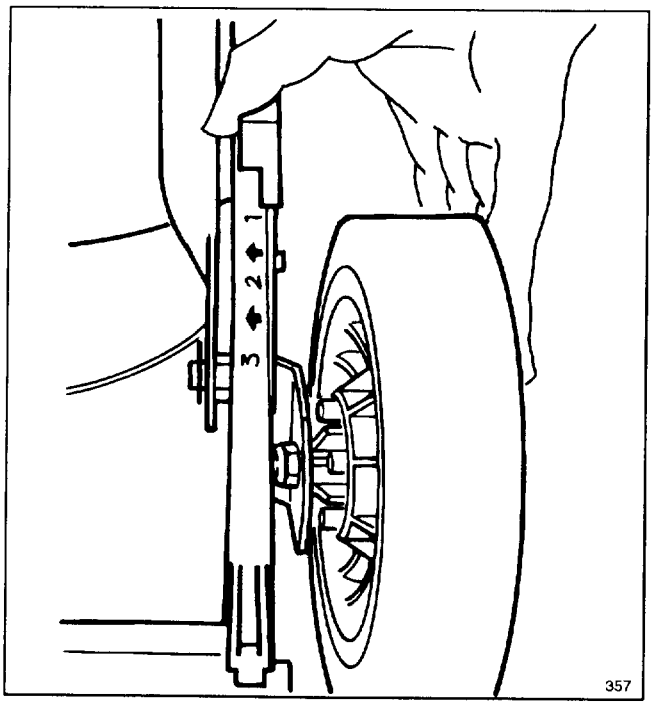

Figure 8

MAINTENANCE

⚠ CAUTION

- **Engine could start accidentally.**
- **Accidental starting of engine could cause serious injury to operator or bystanders.**
- **Pull wire off spark plug before performing any maintenance or adjustments.**

SERVICING AIR CLEANER

Normally, replace air cleaner after every 25 operating hours. More frequent replacement is required when mower is operated in dusty or dirty conditions.

1. Stop engine and pull wire off spark plug (Fig. 11).

2. Remove screw securing air cleaner cover to engine (Fig. 9). Tilt cover down and clean thoroughly.

3. Remove paper air cleaner filter (Fig. 10) and discard.

MAINTENANCE

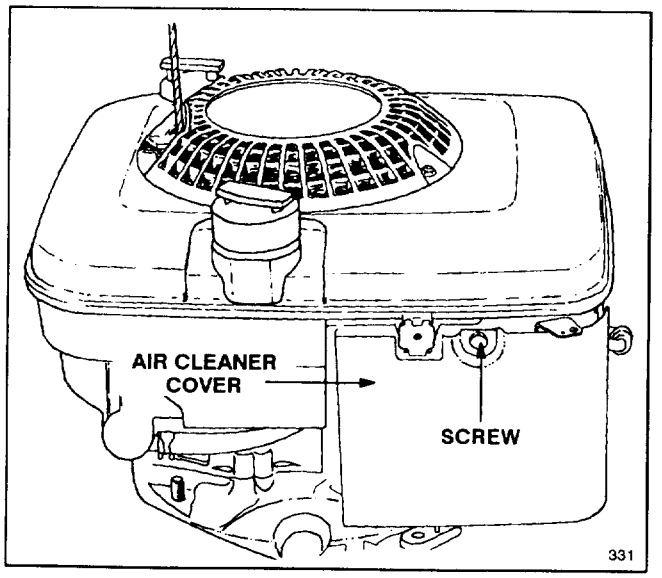

Figure 9

4. Insert new paper air cleaner filter cartridge so lip touches back plate as shown in Figure 10.

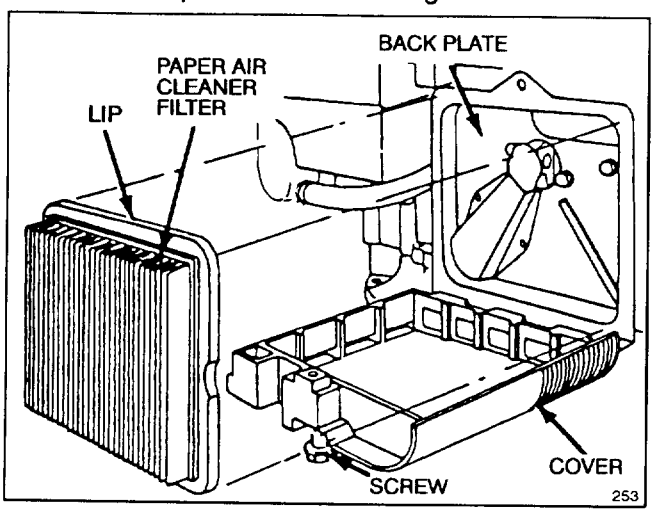

Figure 10

5. Close air cleaner cover and secure with screw.

IMPORTANT: Do not operate engine without air cleaner element because extreme engine wear and damage will likely result.

REPLACING SPARK PLUG

Use a Champion RJ19LM spark plug or equivalent. Correct air gap is 0.030" (0.76 mm). Remove plug after every 25 operating hours and check its condition.

1. Stop engine and pull wire off spark plug (Fig. 11).

2. Clean around spark plug and remove plug from cylinder head.

IMPORTANT: Replace a cracked, fouled, or dirty spark plug. Do not sand blast, scrape, or clean electrodes because engine damage could result from grit entering cylinder.

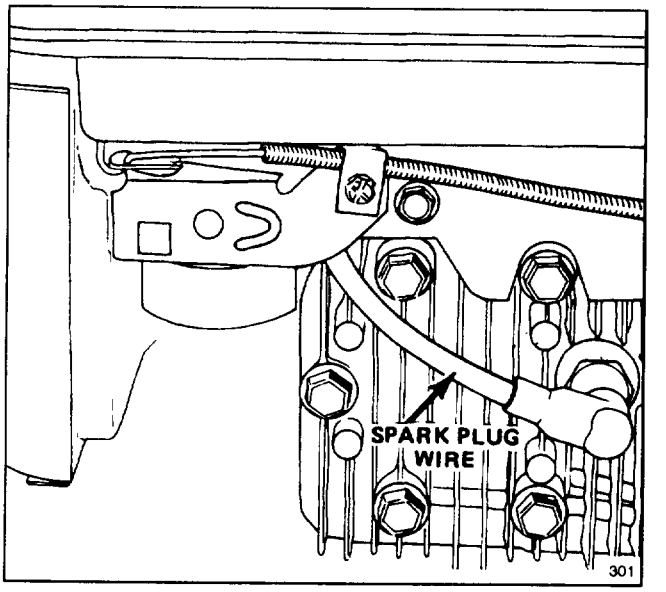

Figure 11

3. Set air gap at 0.030" (0.76 mm) (Fig. 11). Install correctly gapped spark plug and gasket seal. Tighten plug firmly to 15 ft–lb (20 N·m).

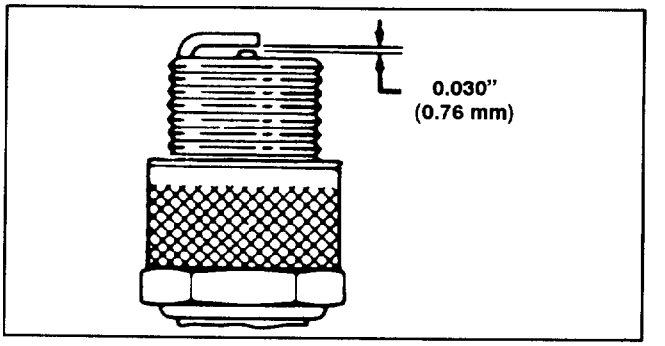

Figure 12

DRAINING GASOLINE

1. Stop engine and pull wire off spark plug (Fig. 11).

Note: Drain gasoline from a cold engine only.

2. Remove cap from fuel tank and use pump–type syphon to drain fuel into clean gas can.

Note: This is the only procedure recommended for draining fuel.

CHANGING CRANKCASE OIL

Change crankcase oil after the first 2 operating hours and after every 25 hours thereafter. Since warm oil drains better and carries more contaminants than cold, run engine for a minute or so before draining oil.

1. Stop engine and pull wire off spark plug (Fig. 11).

2. If necessary, remove grass bag. Drain gasoline from fuel tank: refer to Draining Gasoline, page 7.

3. The oil drain plug is on the underside of the mower deck (Fig. 13 & 14). The recommended procedure for tipping the mower to access the plug is to tip the mower backward onto its handle and have someone firmly hold the mower in this position while you remove the plug. **DO NOT TIP MOWER ON SIDES OR FORWARD WHEN DRAINING OIL.**

Alternative Method: Tip the mower backward onto handle and place a heavy object such as a sandbag on handle to hold mower securely in tilted position.

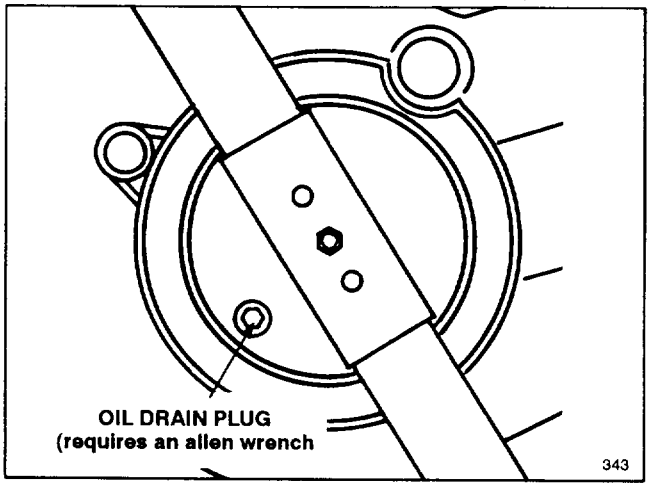

Figure 13

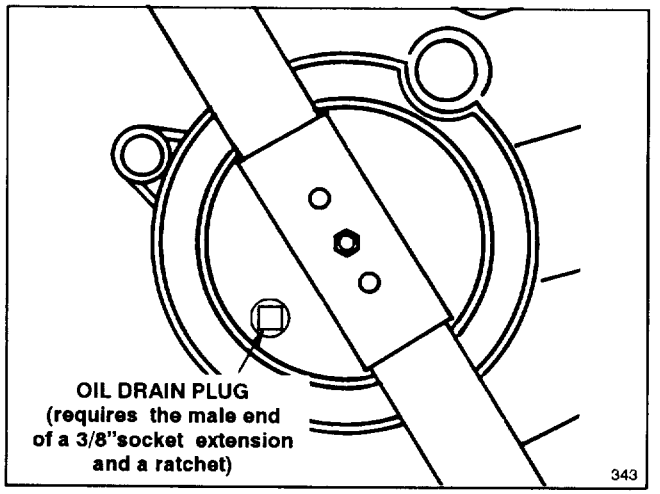

Figure 14

4. Position a drain pan under the mower so it will be in line with the oil drain plug when the mower is tipped back onto all four wheels.

5. Remove drain plug from underside of mower using a 5/16" allen wrench (Fig. 13) or the male end of a 3/8" socket extension with a ratchet for turning (Fig. 14). Plug style will vary.

6. Lower the mower onto all four wheels to allow oil to drain into drain pan.

7. After draining, clean drain plug and tip mower backward onto handle. Have someone firmly hold handle while you reinstall the drain plug.

8. Lower mower onto all four wheels. Wipe up any spilled oil. Fill engine with fresh oil: refer to Fill Crankcase With Oil, page 4.

INSPECTING/REMOVING/SHARPENING BLADE

1. Stop engine and pull wire off spark plug (Fig. 11).

2. Drain gasoline from fuel tank; refer to Draining Gasoline, page 7.

3. Tip mower on its left side (Fig. 15).

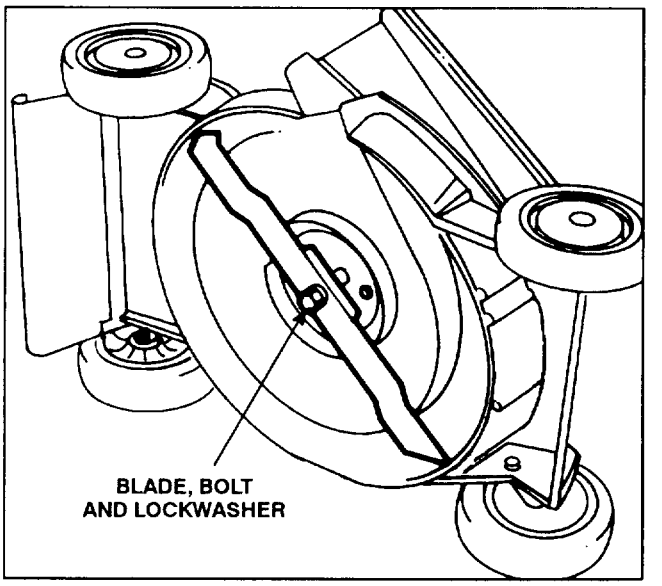

Figure 15

4. INSPECTING BLADE—Carefully examine blade for sharpness and wear, especially where flat and curved parts meet (Fig. 16A). Since sand and abrasive material can wear away the metal that connects the flat and curved parts of the blade, check blade before using the mower. If a slot or wear is noticed, (Fig. 16B & C), replace blade. Refer to step 5.

Note: For best performance, install new blade before cutting season begins. During the year, file down small nicks to maintain the cutting edge.

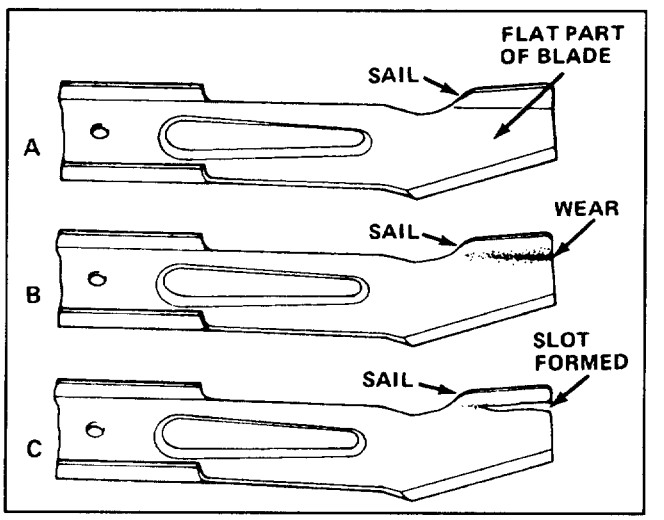

Figure 16

MAINTENANCE

⚠ DANGER

- **A worn or damaged blade could break and a piece of blade could be thrown into operator's or bystander's area.**
- **A thrown piece of blade could cause serious personal injury or death to operator or bystanders.**
- **Inspect blade periodically for wear or damage.**
- **Replace a worn or damaged blade.**

5. REMOVING BLADE—Grasp end of blade using a rag or thickly padded glove. Remove blade bolt, lockwasher, and blade (Fig. 15).

6. SHARPENING BLADE—Using a file, sharpen top side of blade and maintain original cutting angle (Fig. 17). The blade will remain balanced if same amount of material is removed from both cutting edges.

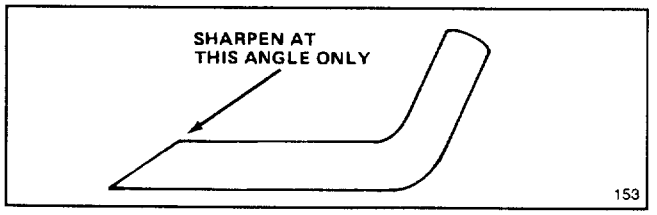

Figure 17

IMPORTANT: Check balance of blade by putting it on a blade balancer. An inexpensive balancer can be purchased at a hardware store. A balanced blade stays in a horizontal position and an unbalanced blade settles to the heavy side. If blade is not balanced, file more metal off cutting edge on heavy end of blade.

7. Install sharp, balanced blade with lockwasher and blade bolt. Sail part of blade must point toward top of mower housing to ensure correct installation. Tighten blade bolt to 50 ft–lb (68 N·m).

LUBRICATION

After every 25 operating hours or when season ends, front and rear wheels must be lubricated.

1. OIL FRONT AND REAR WHEELS—Apply 2 or 3 drops of light oil on inside and outside of wheel bolts. Spin wheels to distribute oil into bushings. Wipe up excess oil.

2. GREASE FRONT AXLE PIVOTS (Fig. 18) (self–propelled model only)—Adjust height–of–cut to 3–inch setting and loosen wheel bolt to get additional clearance around grease fitting. Wipe grease fittings with clean rag. Install grease gun onto fitting and gently apply 2 or 3 pumps of #2 Multi–Purpose Lithium Base Grease.

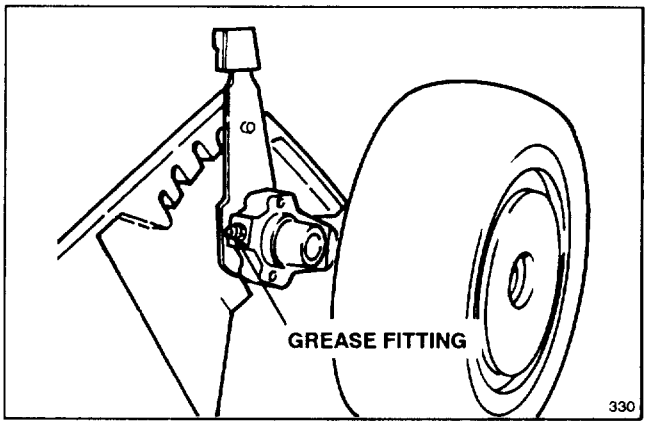

Figure 18

CHECKING TRANSMISSION OIL LEVEL

The transmission is filled with E.P. 90 gear oil that has a GL–5 or GL–6 rating. Level of gear oil must be checked at least every 25 operating hours, before storage and before the mowing season begins.

1. Stop engine and pull wire off spark plug (Fig. 11).

2. Remove two screws and lift off transmission cover (Fig. 19).

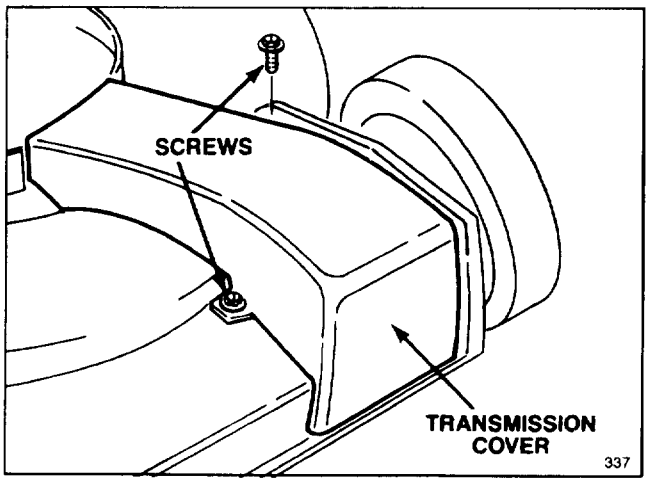

Figure 19

3. CHECKING GEAR OIL LEVEL (Fig. 20)—Position mower on level surface and clean around plastic plug. Remove plastic plug and watch for oil to ooze out of hole. If gear oil oozes out, quickly install plastic plug because oil is at proper level. If oil does not flow, add gear oil: see step 4.

IMPORTANT: Low oil level may indicate a leak where axle goes through both sides of transmission case. Transmission case should be inspected by an Authorized TORO Service Dealer.

4. ADDING GEAR OIL—Slowly add E.P. 90 gear oil that has a GL–5 or GL–6 rating. Stop when oil oozes out of hole in gear case, and quickly install plastic plug. DO NOT OVERTIGHTEN PLASTIC PLUG BECAUSE THREADS MAY STRIP.

MAINTENANCE

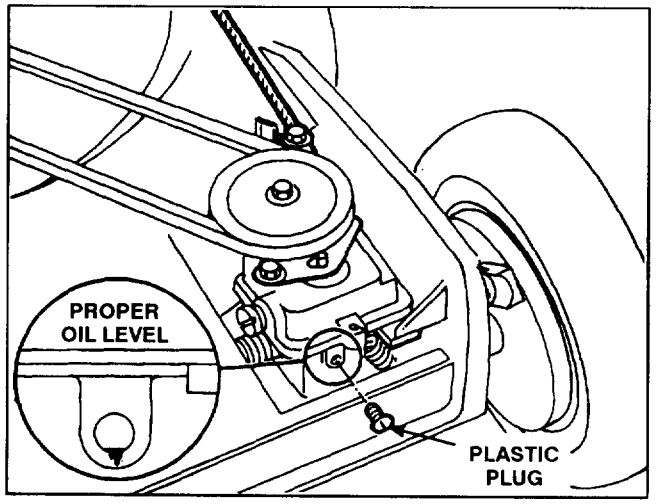

Figure 20

Note: A clean Plews type oil container or any other clean container with a small tip can be used to add oil. Using a dirty oil container could contaminate transmission case and eventually cause damage.

ADJUSTING WHEEL DRIVE CONTROL (self-propelled model only)

If front wheels do not engage and disengage or if a new wheel drive control cable is installed, an adjustment is required.

1. Stop engine and pull wire off spark plug (Fig. 11).

2. Remove transmission cover (Fig. 19).

3. ADJUSTMENT (Fig. 21)—Loosen belt guide screw until cable conduit slides. Move handle–mounted wheel drive control to DISENGAGE position. Move shift arm toward clamp screw and hold in place. Pull cable conduit to remove slack and tighten belt guide screw.

4. Reinstall transmission cover.

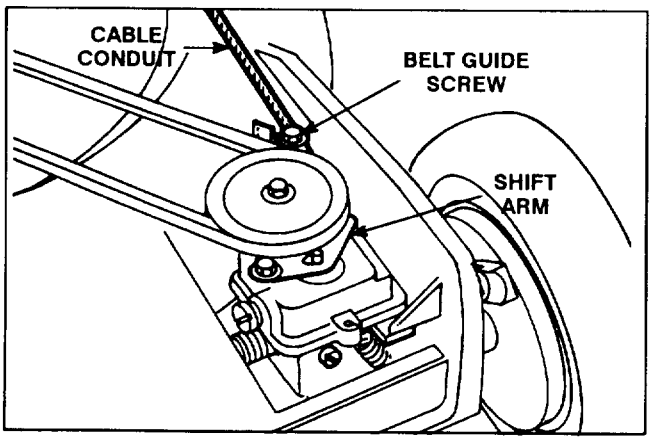

Figure 21

ADJUSTING BLADE BRAKE

Whenever a new blade brake cable assembly is installed, an adjustment is required.

1. Stop engine and pull wire off spark plug (Fig. 11).

2. CHECK ADJUSTMENT (Fig. 22)—Move control bar toward handle until slack in wire is removed. Gap between brake lever and handle must be 1/8"–3/16". See step 3 for adjustment.

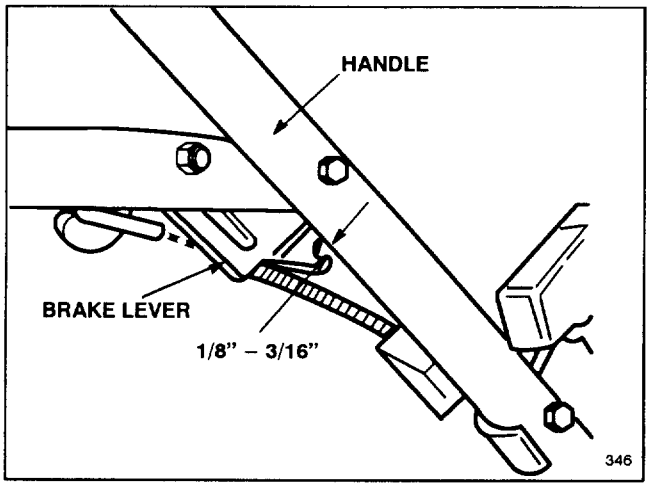

Figure 22

3. ADJUST CABLE CONDUIT—Loosen locknut on cable support (Fig. 23). Insert 1/8"–3/16" object between brake lever and handle. Pull down on cable conduit until slack is removed. Then tighten locknut.

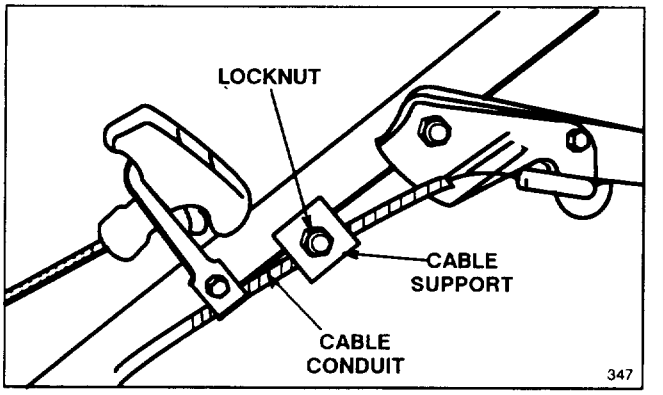

Figure 23

CLEANING MOWER HOUSING

To ensure best performance, keep underside of mower housing and inside of deflector shield area clean.

1. Stop engine and pull wire off spark plug (Fig. 11).

2. Drain gasoline from fuel tank: refer to Draining Gasoline, page 7.

3. Tip mower on its left side. Avoid rotating blade because starting problems may result.

4. Remove dirt and grass clippings that stick to housing with hardwood scraper. Avoid burrs and sharp edges.

MAINTENANCE

PREPARING MOWER FOR STORAGE

1. For long term storage, either drain gasoline from fuel tank or use a fuel additive before storing. To drain gasoline, refer to Draining Gasoline, page 7. After fuel is drained, start engine and let it idle until all fuel is consumed and engine stops. Repeat the starting procedure two more times to ensure all gas is removed from the engine. If gasoline is not drained, gum–like varnish deposits will form and cause poor engine operation, even starting problems.

Fuel can be left in gas tank only if a fuel additive, such as Toro's Stabilizer/Conditioner, is added to gasoline before storing. Toro's Stabilizer/Conditioner is a petroleum distillate based conditioner/stabilizer. Toro does not recommend stabilizers with an alcohol base, such as ethanol, methanol or isopropyl. Use fuel additive in recommended quantities as specified on container.

Under normal conditions, fuel additives remain effective in fuel for 6–8 months.

2. Drain oil: refer to Changing Crankcase Oil, page 7. After oil is drained, do not fill crankcase with oil until the following steps (3-11) are completed.

3. Remove spark plug and pour 2 tablespoons of SAE 30 oil into hole in cylinder. Pull starter rope slowly to coat inside of cylinder. Reinstall spark plug and tighten to 15 ft–lb (20 N·m). **DO NOT INSTALL WIRE ON SPARK PLUG.**

4. Clean mower housing: refer to Cleaning Mower Housing, page 10.

5. Check condition of blade: refer to Inspecting/Removing/Sharpening Blade, page 8.

6. Tighten all nuts, bolts, and screws.

7. Clean dirt and chaff from cylinder, cylinder head fins, and blower housing. Also remove grass clippings, dirt, and grime from external parts of the engine, shrouding, and top of mower housing.

8. Clean air cleaner: refer to Servicing Air Cleaner, page 6.

9. Lubricate the wheels: refer to Lubrication, page 9.

10. Check transmission oil level: refer to Checking Transmission Oil, page 9.

11. Touch up all rusted or chipped paint surfaces. Toro Re–Kote paint is available from an Authorized TORO Service Dealer.

12. Fill crankcase with oil; refer to Fill Crankcase With Oil, page 4.

13. Store mower in a clean, dry place, out of the reach of children. Cover mower to keep it clean and protected.

OPTIONAL EQUIPMENT

For special conditions, the following accessories may be purchased at your local Authorized Toro Service Dealer.

1. **Side Discharge Bagging Kit, Model No. 47–6510**—Side bag kit (Fig. 24) lets you bag lush grass in spring to help keep your lawn free of clippings. In the fall, bag leaves while you mow to eliminate the hand–blistering raking job.

2. **Spark Arrestor, Briggs & Stratton Part No. 398067**—If a spark arrestor is required because of local, state, or federal regulations, it may be purchased at your local Authorized Toro Service Dealer. If mower is operated on any California forest, brush, or grass covered land without a properly operating spark arrestor, the operator is violating state law, Section 4442 Public Resources Code.

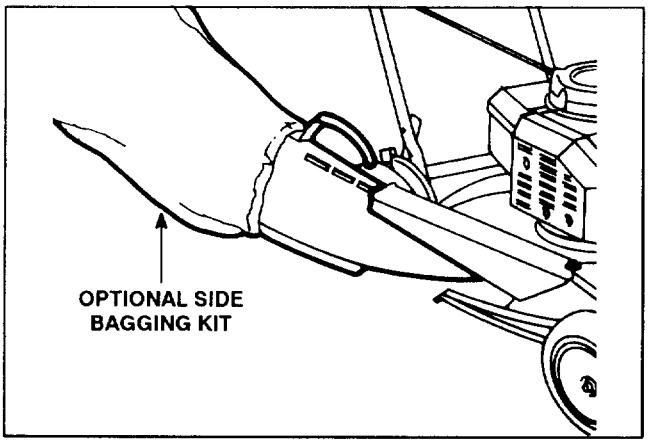

Figure 24

TORO SERVICE SUPPORT

If help – concerning safety, set–up, operation, maintenance, or troubleshooting – is ever needed, contact the local Authorized TORO Service Dealer or Distributor. Refer to the "Yellow Pages" for assistance. In addition to skilled service technicians, the dealer and distributor have factory approved accessories and replacement parts. Keep your Toro all TORO. Buy genuine TORO replacement parts and accessories.

PRODUCT IDENTIFICATION

A model and a serial number decal is located at rear of mower housing. Always refer to specific numbers on this decal in correspondence or when replacement parts are needed.

TORO Consumer Products

THE TORO TOTAL COVERAGE GUARANTEE

A Full Two–Year Warranty
(Limited Warranty for Commercial Use)

What Is Covered By This Express Warranty?

The Toro Company promises to repair any TORO Product used for residential purposes if defective in materials or workmanship for a period of two years from the date of purchase. The cost of parts and labor are included, but the customer pays the transportation costs.

Transportation within a 15 mile radius of the servicing dealer is covered under this warranty for two–stage snowthrowers, walk behind debris equipment and all TORO Wheel Horse riding products. Walk power mowers, single stage snowthrowers, and other products not specifically covered, are excluded from the transportation coverage provided by this warranty.

What Products Are Covered By This Warranty?

This warranty applies to all gasoline powered Consumer Products (including TORO Wheel Horse riding products). Wide area walk behind mowers, ProLine 118, and 21" Commercial mowers without blade stop controls are covered by separate warranty statements.

How About Commercial Use?

TORO Consumer Products used for commercial, institutional or rental use are covered by a limited warranty for the following time periods from the date of purchase:

Products	Warranty Period
• 300 through 700 Series Tractors (except 612–Z) and 1600 HMR	
Chassis	1 year limited warranty
Engine	2 year limited warranty
• 21" Commercial Duty Walk Mower with blade stop controls	1 year limited warranty
• 200 Series Tractors, Rear Engine Riders, 612–Z, 1200 HMR 3.0 and 3.5 HP Edgers Straight Shaft Trimmers, and Backpack Blowers	90 day limited warranty
• All Others	45 day limited warranty

How Do You Get Warranty Service?

Should you feel your TORO product contains a defect in material or workmanship, contact the dealer who sold you the product or any Authorized TORO Service Dealer or TORO Master Service Dealer. The Yellow Pages of your telephone directory is a good reference source. The dealer will either arrange service at his/her dealership or recommend another Authorized Service Dealer who may be more convenient. You may need proof of purchase (copy of registration card, sales receipt, etc.) for warranty validation.

If for any reason you are dissatisfied with the Service Dealer's analysis of the defect in materials or workmanship or if you need a referral to a TORO Service Dealer, please feel free to contact us at the following address:

Toro Customer Service Department
8111 Lyndale Avenue South
Minneapolis, MN 55420
612–888–8801

What Must You Do To Keep The Warranty In Effect?

You must maintain your TORO Product by following the maintenance procedures described in the operator's manual. Such routine maintenance, whether performed by a dealer or by you, is at your expense.

What Does This Warranty Not Cover? and How Does Your State Law Relate To This Warranty?

There is no other express warranty except the TORO Starting Guarantee on GTS Engines. This express warranty does not cover:

- Cost of regular maintenance service or parts, such as filters, fuel, lubricants, tune–up parts, blade sharpening, brake and clutch adjustments.
- Any product or part which has been altered or misused or required replacement or repair due to normal wear, accidents, or lack of proper maintenance.
- Repairs necessary due to improper fuel, contaminants in the fuel system, or failure to properly prepare the fuel system prior to any period of non–use over three months.
- Pickup and delivery charges for distances beyond a 15 mile radius from an Authorized TORO Service Dealer (covered products only).

All repairs covered by this warranty must be performed by an Authorized TORO Service Dealer using Toro approved replacement parts.

Repair by an Authorized TORO Service Dealer is your sole remedy under this warranty.

The Toro Company is not liable for indirect, incidental or consequential damages in connection with the use of the TORO Products covered by this warranty, including any cost or expense of providing substitute equipment or service during reasonable periods of malfunction or non–use pending completion of repairs under this warranty. Some states do not allow exclusions of incidental or consequential damages, so the above exclusion may not apply to you.

This warranty gives you specific legal rights, and you may also have other rights which vary from state to state.

COUNTRIES OTHER THAN THE UNITED STATES OR CANADA

Customers who have purchased TORO products exported from the United States or Canada should contact their TORO Distributor (Dealer) to obtain guarantee policies for your country, province, or state. If for any reason you are dissatisfied with your Distributor's service or have difficulty obtaining guarantee information, contact the TORO importer. If all other remedies fail, you may contact us at The Toro Company.