Form No. 3378-857 Rev A

TORO®

Count on it.

Operator's Manual

MM-Series Mortar Mixer

Model No. 68013C—Serial No. 313000001 and Up
Model No. 68014C—Serial No. 313000001 and Up
Model No. 68016C—Serial No. 313000001 and Up
Model No. 68017C—Serial No. 313000001 and Up
Model No. 68020C—Serial No. 313000001 and Up
Model No. 68021C—Serial No. 313000001 and Up
Model No. 68024C—Serial No. 313000001 and Up

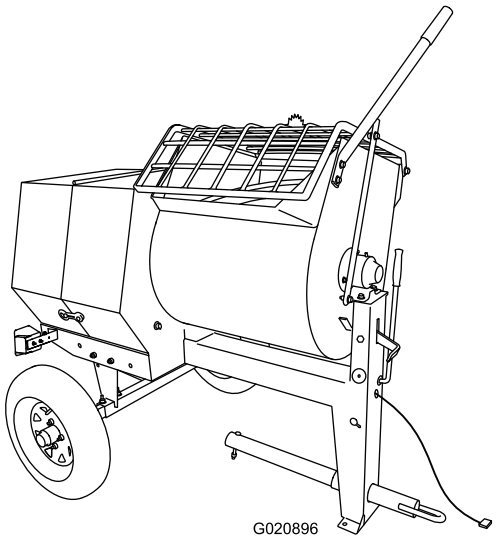

Register at www.Toro.com.
Original Instructions (EN)

3378-857 A

⚠ WARNING

CALIFORNIA
Proposition 65 Warning

This product contains a chemical or chemicals known to the State of California to cause cancer, birth defects, or reproductive harm.

The engine exhaust from this product contains chemicals known to the State of California to cause cancer, birth defects, or other reproductive harm.

Use of this product may cause exposure to chemicals known to the State of California to cause cancer, birth defects, or other reproductive harm.

This spark ignition system complies with Canadian ICES-002.

Because in some areas there are local, state, or federal regulations requiring that a spark arrester be used on the engine of this machine, a spark arrester is available as an option. If you require a spark arrester, contact your Authorized Toro Service Dealer.

Genuine Toro spark arresters are approved by the USDA Forestry Service.

Important: It is a violation of California Public Resource Code Section 4442 to use or operate the engine on any forest-covered, brush-covered, or grass-covered land without a spark arrester muffler maintained in working order, or the engine constricted, equipped, and maintained for the prevention of fire. Other states or federal areas may have similar laws.

The enclosed *Engine Owner's Manual* is supplied for information regarding the US Environmental Protection Agency (EPA) and the California Emission Control Regulation of emission systems, maintenance, and warranty. Replacements may be ordered through the engine manufacturer.

If you believe that your machine has a defect which could cause a crash or could cause injury or death, you should immediately inform the National Highway Traffic Safety Administration (NHTSA) if you live in the United States, or Transport Canada if you live in Canada, in addition to notifying The Toro Company.

If NHTSA or Transport Canada receives similar complaints, it may open an investigation, and if it finds that a safety defect exists in a group of machines, it may order a recall and remedy campaign. However, NHTSA or Transport Canada cannot become involved in individual problems between you, your dealer, or The Toro Company.

- To contact NHTSA, you may call the Vehicle Safety Hotline toll-free at 1-888-327-4236 (TTY: 1-800-424-9153); go to http://www.safercar.gov; or write to: Administrator, NHTSA, 1200 New Jersey Avenue, SE West Building, Washington, DC 20590. You can also obtain other information about motor vehicle safety from http://www.safercar.gov.
- To contact Transport Canada, you may call 1-800-333-0510 or (819) 994-3328; go to http://www.tc.gc.ca/roadsafety/; write to: Road Safety and Motor Vehicle Regulation Directorate, Transport Canada, Tower C, Place de Ville, 330 Sparks Street, Ottawa, Ontario, K1A 0N5; or email RoadSafety@tc.gc.ca.

Introduction

This machine is designed to mix mortar, plaster, fireproofing material, grout, and other small-grained Portland cement products. A vehicle equipped with an appropriate pintle hitch or ball hitch can tow the machine.

Read this information carefully to learn how to operate and maintain your product properly and to avoid injury and product damage. You are responsible for operating the product properly and safely.

You may contact Toro directly at www.Toro.com for product and accessory information, help finding a dealer, or to register your product.

Whenever you need service, genuine Toro parts, or additional information, contact an Authorized Service Dealer or Toro Customer Service and have the model and serial numbers of your product ready. Write the numbers in the space provided.

© 2013—The Toro® Company
8111 Lyndale Avenue South
Bloomington, MN 55420

Contact us at www.Toro.com.
Printed in the USA
All Rights Reserved

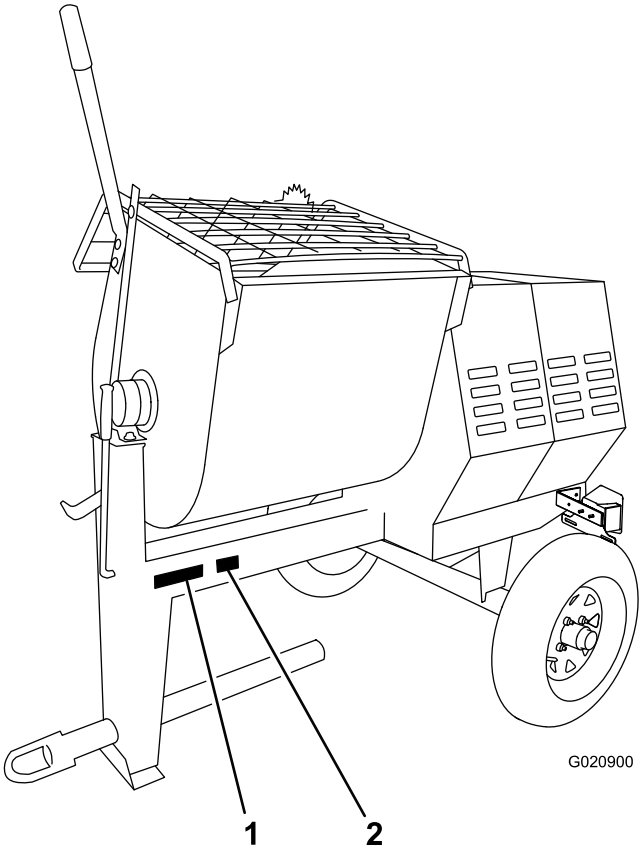

Figure 1

1. Model and serial number location
2. Vehicle identification number (VIN) location

Model No. _____

Serial No. _____

This manual identifies potential hazards and has safety messages identified by the safety alert symbol (Figure 2), which signals a hazard that may cause serious injury or death if you do not follow the recommended precautions.



Figure 2

1. Safety alert symbol

This manual uses 2 words to highlight information. **Important** calls attention to special mechanical information and **Note** emphasizes general information worthy of special attention.

Tire Information

The DOT tire information is located on the side of each tire. This information gives load and speed ratings. Replacement tires should have the same or better ratings.

Note: The various machines in this manual have different weights; refer to Specifications (page 13) to ensure that the tires on your machine meet or exceed the weight requirements of your machine.

Contents

Safety 4
Safe Operating Practices 4
Safety and Instructional Decals 7
Setup 8
1 Installing the Dump Handle 8
2 Installing the Tow Pole 8
3 Installing the Safety Chain 9
Product Overview 10
Controls 11
Specifications 13
Operation 13
Preparing to Tow the Machine 13
Extending the Axle—Belt-drive Models 17
Towing the Machine 18
Preparing to Use the Machine 18
Opening and Closing the Cowl 18
Adding Fuel 19
Checking the Engine Oil Level 20
Starting and Stopping the Engine 21
Controlling the Paddles 22
Mixing the Material 23
Using the Drum 24
Adjusting the Paddle Blades 24
Maintenance 27
Recommended Maintenance Schedule(s) 27
Premaintenance Procedures 28
Preparing the Machine for Maintenance 28
Disconnecting the Spark-plug Wire 28
Removing and Installing the Divider Plate 28
Lubrication 29
Lubricating the Bearings and Seals 29
Engine Maintenance 30
Servicing the Air Cleaner 30
Changing the Engine Oil 30
Servicing the Spark Plug 32
Servicing the Spark Arrester 33
Removing and Installing the Engine 34
Fuel System Maintenance 35
Servicing the Fuel System 35
Drive System Maintenance 36
Servicing the Reduction Case—Belt-drive Models 36
Servicing the Gear Case—Gear-Case Model 38
Belt Maintenance 39
Servicing the Belts—Belt-drive Models 39
Replacing the Belts—Belt-drive Models 40
Aligning the Pulleys—Belt-drive Models 42
Replacing the Light Bulbs 43
Replacing the Rear-facing Bulbs 43
Replacing the Side-facing Bulbs 43

Cleaning 44
Cleaning the Machine.....44
Storage 44
Storing the Machine.....44
Troubleshooting 46

Safety

Improperly using or maintaining the machine can result in injury. To reduce the potential for injury, comply with these safety instructions and always pay attention to the safety alert symbol ⚠, which means: *Caution*, *Warning*, or *Danger*—personal safety instruction. Failure to comply with the instruction may result in personal injury or death.

Safe Operating Practices

This machine is capable of amputating hands. Always follow all safety instructions to avoid serious injury or death.

⚠ WARNING

Machining or handling stone, masonry, concrete, metal, and other materials can generate dust, mists, and fumes containing chemicals, such as silica, known to cause serious or fatal injury or illness, such as respiratory disease, silicosis, cancer, birth defects, or other reproductive harm.

- **Control dust, mist, and fumes at the source where possible. Use water for dust suppression, when feasible.**
- **Use good work practices and follow the recommendations of the manufacturer or supplier, CCOHS, OSHA, and other occupational and trade associations.**
- **Always follow respiratory precautions.**
- **When the hazards from inhalation cannot be eliminated, the operator and any bystanders should wear a respirator approved by CCOHS or OSHA for the material being handled.**

⚠ WARNING

Engine exhaust contains carbon monoxide, an odorless, deadly poison that can kill you.

Do not run the engine indoors or in an enclosed area.

Training

- Read the *Operator's Manual* and other training material. If the operator(s) or mechanic(s) cannot read or understand the information, it is the owner's responsibility to explain this material to them.
- Become familiar with the safe operation of the equipment, operator controls, and safety signs.
- All operators and mechanics should be trained. The owner is responsible for training the users.

- Never let children or untrained people operate or service the equipment. Local regulations may restrict the age of the operator.
- The owner/user can prevent and is responsible for accidents or injuries occurring to people or damage to property.

Towing

Check with your local county or state towing safety regulations, in addition to meeting Transport Canada (or Department of Transportation if in the U.S.) towing safety regulations, before towing the machine.

- In order to reduce the possibility of an accident while transporting the machine on public roads, make sure the towing vehicle is mechanically sound and in good operating condition.
- Shut down the engine before transporting the machine.
- When towing with a ball hitch, ensure that the ball hitch you are using is the proper size for the hitch coupler on the machine.
- When towing with a pintle hitch, ensure that the eye of the tow pole is the correct dimension for the pintle hook.
- Inspect the hitch and coupling for wear. **Never** tow the machine with damaged or defective hitches, couplings, chains, or other components.
- Check the tire air pressure on the towing vehicle and the machine.
- Check the tire tread and sidewall for damage and wear.
- Properly attach the safety chains to the towing vehicle.
- Ensure that the directional and brake lights are working properly.
- Ensure that the directional, backup, and brake lights of the tow vehicle are working properly.
- Before towing check to make certain your machine is correctly and securely attached to the towing vehicle.
- Ensure that the safety chains are properly secured to the vehicle, and leave enough slack for turning.
- Do not carry any material in the machine when towing.
- Avoid sudden stops and starts. This can cause skidding, or jackknifing. Smooth, gradual starts and stops will improve towing.
- Avoid sharp turns to prevent rolling. Tow only with a vehicle that has a hitch designed for towing. Do not attach towed equipment except at the hitch point.
- Do not tow the machine faster than 88 km/h (55 mph).
- Use caution when backing up; use a spotter outside the vehicle to guide you.
- Do not allow anyone to sit or ride on the machine.
- Disconnect the machine from the tow vehicle before using it.
- Place chock blocks underneath the tires to prevent them from rolling while the machine is parked.

Preparation

Become familiar with the safe operation of the equipment, operator controls, and safety signs.

- Use only accessories and attachments approved by the manufacturer.
- Wear personal protective equipment and appropriate clothing including:
  - Hard hat
  - Respirator or dust mask
  - Face shield
  - Safety glasses
  - Hearing protection
  - Safety shoes
  - Long pants
  - Shirt with long sleeves buttoned at the wrists
  - Tight-fitting gloves without drawstrings or loose cuffs
- Secure long hair, loose clothing, or jewelry that may get tangled in moving parts.
- Operating the equipment safely requires the full attention of the operator. Do not wear radio or music headphones while operating the machine.
- Use extra care when handling fuels. They are flammable and the vapors are explosive. Use the following practices when handling fuel:
  - Use only an approved fuel container.
  - Never remove the fuel cap or add fuel with the engine running.
  - Allow the engine to cool before refueling.
  - Do not smoke.
  - Never refuel or drain the machine indoors.
  - Replace the fuel cap and tighten it securely.
  - Keep the container nozzle in contact with the tank during filling.
  - Never fill a container while it is inside a vehicle, trunk, pick-up bed, or any surface other than the ground.
  - Never store the machine or fuel container inside where there is an open flame, such as near a water heater or furnace.
  - If fuel is spilled, wipe it off the engine and equipment.
- Ensure that the machine is on a level surface before operating the machine.
- Chock the tires of the machine to prevent unintended movement.
- Before every use:
  - Inspect the coupler, ball, and hitch.
  - Ensure that all lights are functioning properly (if equipped with a light kit).

- Ensure that the tires are properly inflated as recommended.
- Ensure that the lug nuts are tight and torqued properly.
- Ensure that the machine is properly secured.

Operation

- Never run an engine in an enclosed or poorly ventilated area.
- Only operate the machine in good lighting conditions.
- Before starting the machine, make sure that there are no persons or obstacles near or under the machine.
- Shut off the engine before leaving the machine for any reason.

  Never leave a running machine unattended. Always stop the engine and verify that all moving parts have stopped.
- Chock the tires of the machine or keep it attached to the towing vehicle when it is not in use, to prevent it from rolling.
- Avoid prolonged breathing of exhaust fumes. Engine exhaust fumes can cause sickness or death.
- Keep hands away from any moving parts. Keep feet away from the tires and the front post.
- Do not operate the machine under the influence of alcohol or drugs.
- Ensure that the area is clear of other people or pets before operating the machine. Stop the machine if anyone enters the area.
- Never place your hands or any solid object into the drum when the machine is in operation.
- Do not touch parts which may be hot from operation. Allow them to cool before attempting to maintain, adjust, or service the machine.
- Never move the machine while the engine is running.
- Keep the cowl closed and latched during operation.
- Ensure that all the guards and shields are securely in place before operating the machine.
- Disconnect the spark-plug wire and keep it away from the spark plug to prevent accidental starting while adjusting the machine.
- If the mixing paddles strike a foreign object or if the machine should start making an unusual noise or vibration, stop the engine and empty the drum. Wait for all moving parts to come to a complete stop and cool. Vibration is generally a warning of trouble. Disconnect the spark-plug wire and inspect for clogging or damage. Clean and repair and/or replace damaged parts.
- Do not change the engine governor setting or overspeed the engine.
- Lightning can cause severe injury or death. If you see lightning or hear thunder in the area, do not operate the machine; seek shelter.

Maintenance and Storage

- Before performing maintenance, do the following:
  - Park the machine on level ground.
  - Stop the engine. Wait for all movement to stop before adjusting, cleaning, or repairing.
  - Let the engine cool before performing maintenance or storing.
  - Remove the spark-plug wire before making any repairs.
  - Disengage all power and operation controls.
- Never lubricate, service, repair, or adjust the machine while it is running.
- Keep equipment materials clear from the muffler and engine to help prevent fires. Clean up any oil or fuel spillage.
- Never allow untrained personnel to service the machine.
- Keep hands, feet, and clothing away from moving parts. If possible, do not make adjustments with the engine running.
- Keep all parts in good working condition and all hardware tightened. Replace all worn or damaged decals.
- Remove any buildup of grease, oil, or debris from the machine.
- Stop and inspect the machine if a foreign object enters the drum or causes another obstruction. Make any necessary repairs before starting the machine.
- Do not tamper with safety devices.
- Chock the tires when storing the machine.
- Keep all nuts, bolts, screws, and hose clamps securely tightened. Keep equipment in good condition.
- Use only genuine Toro replacement parts to ensure that the original standards are maintained.

Safety and Instructional Decals

Safety decals and instructions are easily visible to the operator and are located near any area of potential danger. Replace any decal that is damaged or lost.



117–2718

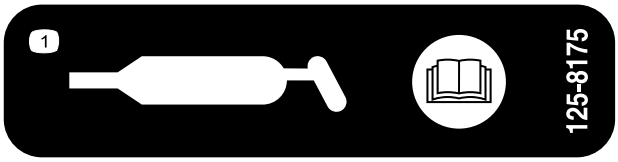

125–8175

1. Read the *Operator's Manual* for information on greasing the machine.

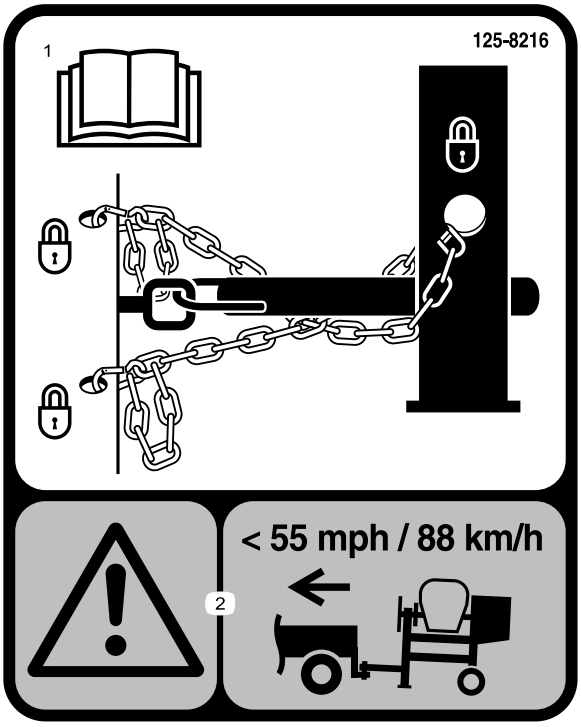

125–8216

1. Read the *Operator's Manual* for information on how to tow the machine.
2. Warning—limit towing speed to less than 55 mph / 88 km/h.



125–4939

1. Warning—read the *Operator's Manual*.
2. Hand and arm entanglement at the belt drive; crushing hazard of hand; entanglement hazard of hand at the shaft—keep hands away from moving parts; keep all guards and shields in place.
3. Entanglement hazard at paddles—stop the engine and wait for all moving parts to stop before performing maintenance.
4. Toxic gas inhalation hazard—Don't run the engine in an enclosed space.
5. Explosion hazard—stop the engine and keep away from flames when refueling.

Setup

Loose Parts

Use the chart below to verify that all parts have been shipped.

Procedure	Description	Qty.	Use
1	Dump handle Bolt Nut	1 2 2	Install the dump handle.
2	Tow pole kit (sold separately)	1	Install the tow pole.
3	Safety chain Connecting link	1 2	Install the safety chain.

1

Installing the Dump Handle

Parts needed for this procedure:

1	Dump handle
2	Bolt
2	Nut

Installing the Dump Handle to the Drum

1. Cut the cable ties to remove the dump handle from the underside of the grate.
2. Position the dump handle so that the bolt holes align with the bolt holes in the drum (Figure 3, Figure 4, or Figure 5).

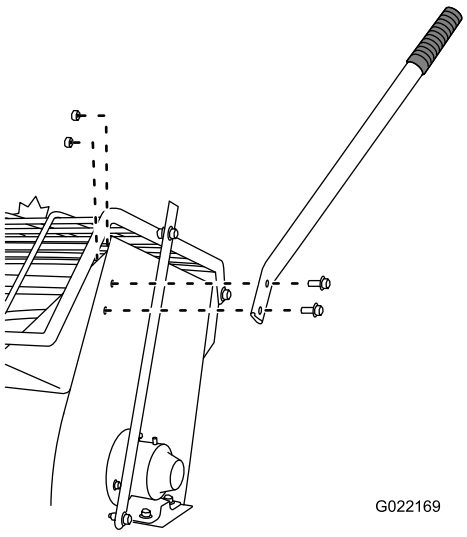

Figure 3

Models 68013C, 68016C, 68020C

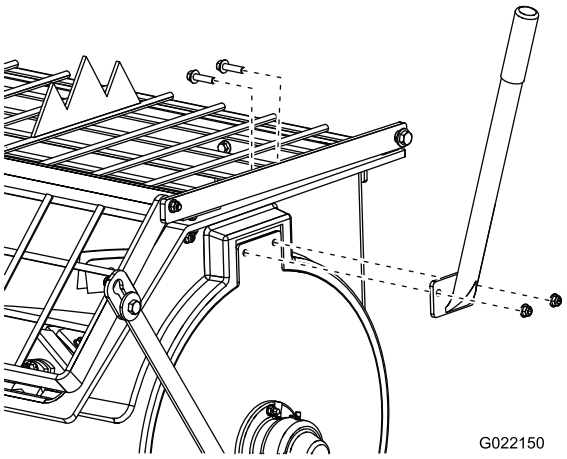

Figure 4

Models 68014C, 68017C, 68021C

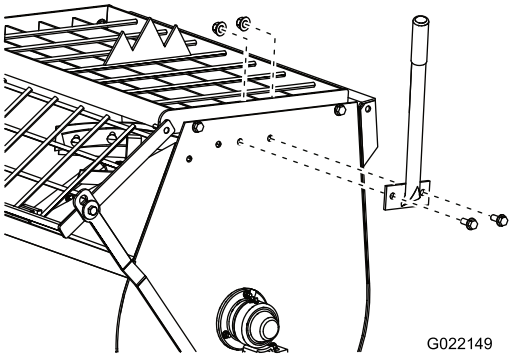

Figure 5

Model 68024C

3. Insert the 2 bolts through the bolt holes in the dump handle and the drum (Figure 3, Figure 4, or Figure 5).
4. Install a nut onto each bolt, and tighten them by hand to prevent cross-threading.
5. Tighten the nuts with a wrench while using another wrench to keep the bolts from spinning.

2

Installing the Tow Pole

Parts needed for this procedure:

1	Tow pole kit (sold separately)

Installing the Tow Pole to the Machine

Note: The tow pole is purchased separately and includes the nut and bolt needed for installation.

The machine has the following tow pole options:

Hitch Type	Length
50 mm (2 inch) ball—stamped	78.7 cm (31 inches) or 127 cm (50 inches)
50 mm (2 inch) ball—forged	78.7 cm (31 inches) or 127 cm (50 inches)
Pintle	78.7 cm (31 inches) or 127 cm (50 inches)

1. Remove the bolt and nut from the tow pole (Figure 6).

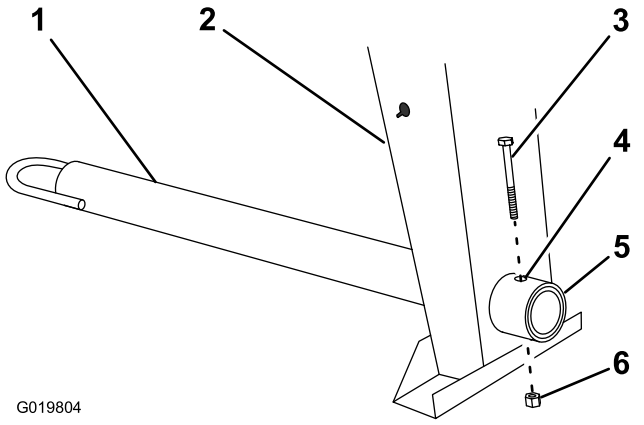

Figure 6

1. Tow pole
2. Front post
3. Bolt
4. Bolt hole
5. Frame fitting
6. Nut

2. Slide the tow pole forward and align the hole in the pole with the hole in the frame fitting (Figure 6).
3. Insert the bolt through the holes in the fitting and the pole (Figure 6).
4. Thread the nut onto the bolt and tighten them until they are tight against the frame fitting (Figure 6).

   Note: If the self-locking nylon insert in the locknut wears with use, replace the nut with a new Grade 5 or Grade 8 locknut.

3

Installing the Safety Chain

Parts needed for this procedure:

1	Safety chain
2	Connecting link

Installing the Safety Chain to the Machine

1. Form a hook on the end of a bendable piece of rod or stiff wire (not included), and insert it through both keyholes in the front post of the machine (Figure 7).

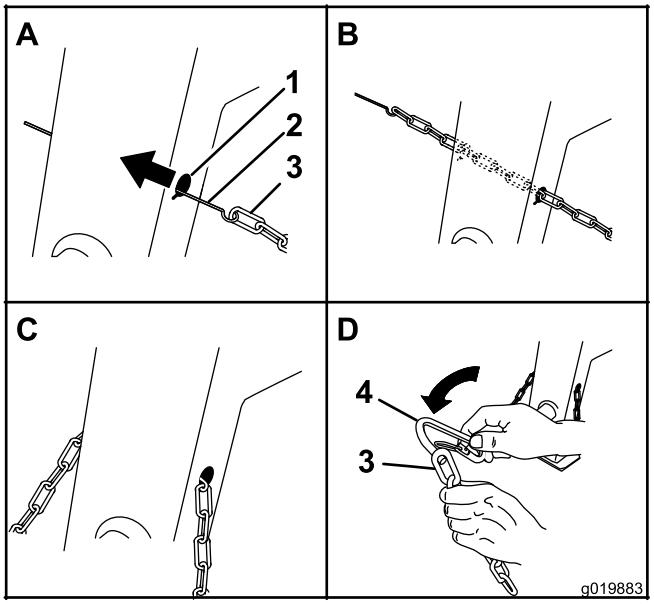

Figure 7

1. Keyhole
2. Rod or wire (not included)
3. Safety chain
4. Connecting link

2. Attach the safety chain to the length of rod or wire (Figure 7).
3. Pull the rod, or wire, and the safety chain through both keyholes (Figure 7).

   Note: Ensure that approximately equal lengths of safety chain extend from either side of the front post.

Installing the Connecting Links

1. Align the connecting link to the last link in one end of the safety chain (Figure 7).
2. Insert the connecting link through the chain link until the connecting link snaps closed (Figure 7).
3. Repeat steps 1 and 2 to install the other connecting link in the other end of the safety chain.

Product Overview

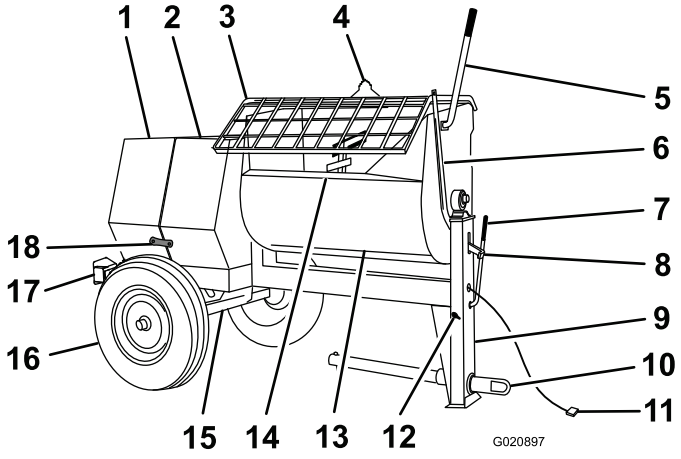

Figure 8

Right side (models 68013C, 68014C, 68016C, 68017C, 68020C, and 68021C)

1.	Rear cowl	7.	Clutch lever	13.	Drum
2.	Front cowl	8.	Drum latch	14.	Chute
3.	Grate	9.	Front post	15.	Axle
4.	Bag splitter	10.	Tow pole	16.	Wheel assembly
5.	Dump handle	11.	Lighting wire harness	17.	Light (2)
6.	Grate lift arm	12.	Safety-chain keyhole	18.	Cowl latch

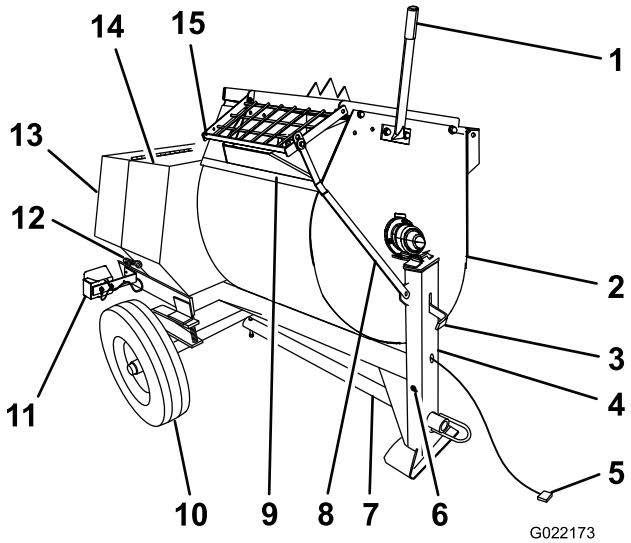

Figure 9

Right side (model 68024C)

1.	Dump handle	6.	Safety-chain keyhole	11.	Light (2)
2.	Drum	7.	Tow pole	12.	Cowl latch
3.	Drum latch	8.	Grate lift arm	13.	Rear cowl
4.	Front post	9.	Chute	14.	Front cowl
5.	Lighting wire harness	10.	Wheel assembly	15.	Grate

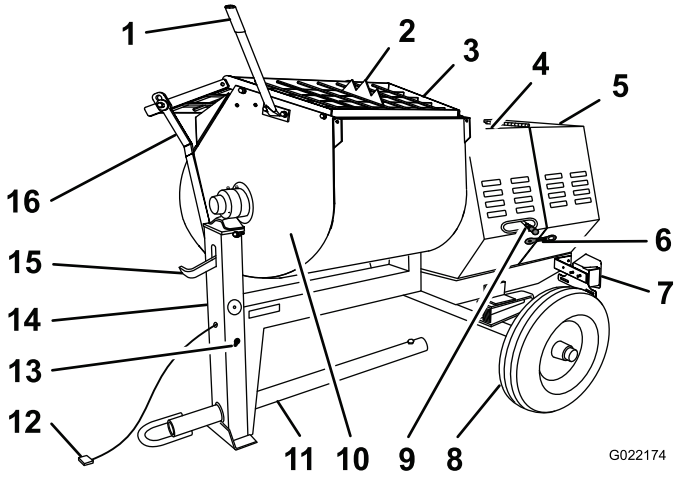

Figure 10

Left side (model 68024C)

1.	Dump handle	7.	Light (2)	13.	Safety-chain keyhole
2.	Bag splitter	8.	Wheel assembly	14.	Front post
3.	Grate	9.	Clutch lever	15.	Drum latch
4.	Front cowl	10.	Drum	16.	Grate lift arm
5.	Rear cowl	11.	Tow pole		
6.	Cowl latch	12.	Lighting wire harness		

Controls

Become familiar with all the controls before you start the engine and operate the machine.

Clutch Lever

The clutch lever engages and disengages engine power to the paddles.

- **Belt-drive models (models 68013C, 68014C, 68016C, 68017C, 68020C, and 68021C)**

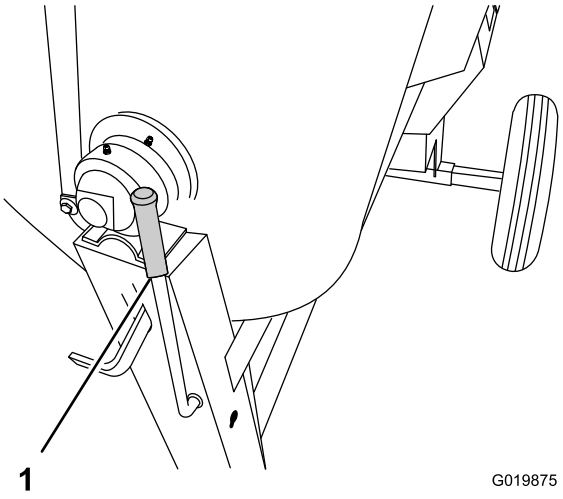

Figure 11
Belt-drive models

1. Clutch lever

- **Gear-case model (model 68024C)**

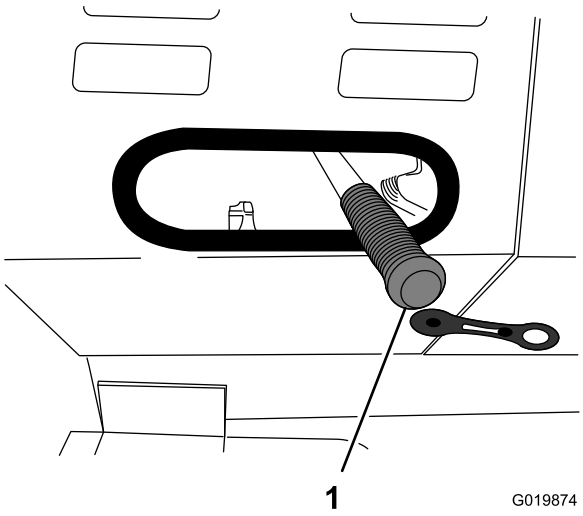

Figure 12
Gear-case model

1. Clutch lever

Drum Latch

The drum latch secures the drum to the mix position (upright) for mixing operations and when transporting the machine.

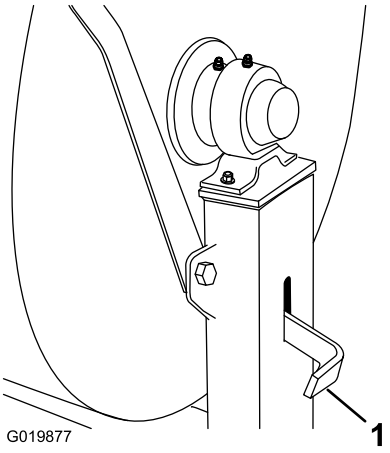

Figure 13

1. Drum latch

Dump Handle

Use the dump handle to rotate the drum to the dump position and to rotate the drum to the mix position (upright).

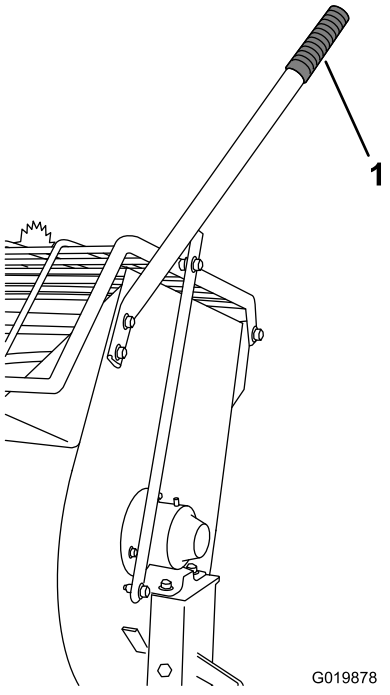

Figure 14
Models 68013C, 68016C, and 68020C shown

1. Dump handle

Engine Controls

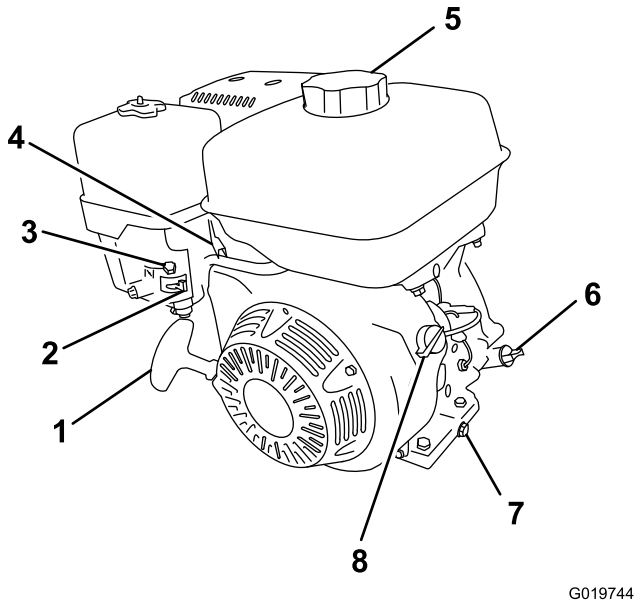

Figure 15

1. Recoil-start handle
2. Fuel valve
3. Choke lever
4. Throttle lever
5. Fuel cap
6. Oil cap/dipstick
7. Oil-drain plug
8. On/Off switch

Fuel Valve

The fuel valve (Figure 16) is located underneath the choke lever. Move the lever for the fuel valve to the On position before attempting to start the engine. When you have finished mixing, stop the engine and move the fuel valve lever to the Off position.

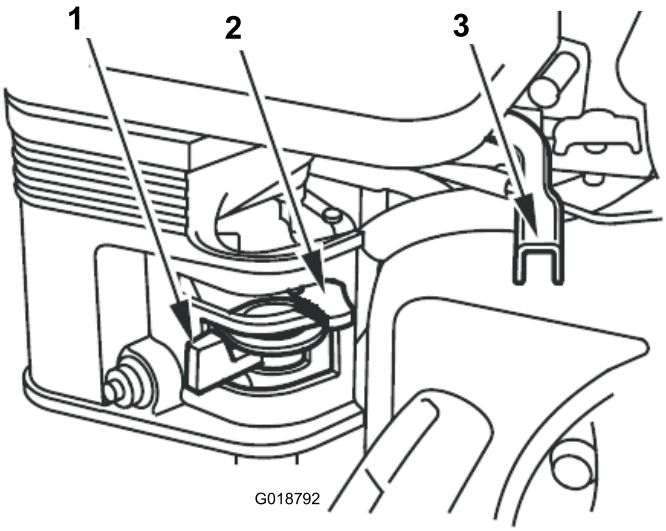

Figure 16

1. Fuel valve
2. Choke lever
3. Throttle lever

Choke Lever

Use the choke lever (Figure 16) to start a cold engine. Before pulling the recoil-start handle, move the choke lever to the closed position. Once the engine is running, move the choke lever to the open position. Do not use the choke if the engine is already warmed up or the air temperature is high.

Throttle Lever

The throttle lever (Figure 16) controls the speed (rpm) of the engine. It is located next to the choke lever. It sets the engine speed and therefore can increase and decrease the rotation speed of the mixing paddles. For best performance, set this control to the fast position when mixing material.

Engine On/Off Switch

The On/Off switch (Figure 17) allows the operator of the machine to start and stop the engine. This switch is located on the front of the engine. Rotate the On/Off switch to the On position to start and run the engine. Rotate the On/Off switch to the Off position to stop the engine.

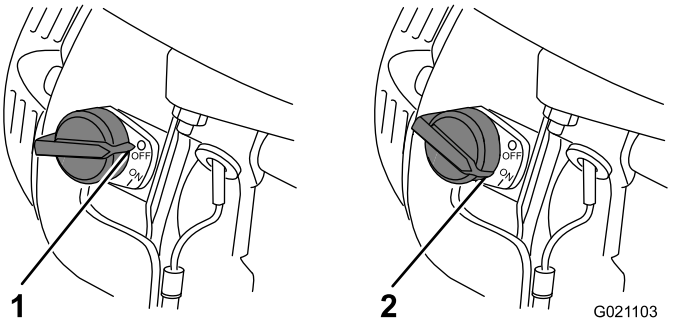

Figure 17

1. **Off** position
2. **On** position

Recoil-start Handle

To start the engine, pull the recoil-start handle (Figure 15) quickly to turn the engine over. The engine controls described above must all be set correctly for the engine to start.

Oil-level Switch

The oil-level switch is located inside the engine, and it will not allow the engine to run in the event the oil level is below the safe operating limit.

Specifications

Note: Specifications and design are subject to change without notice.

Machine Specifications

Model	68013C	68014C	68016C	68017C	68020C	68021C	68024C
Batch Capacity	0.17 cubic m (6.0 cubic ft)	0.17 cubic m (6.0 cubic ft)	0.17 cubic m (6.0 cubic ft)	0.17 cubic m (6.0 cubic ft)	0.23 cubic m (8.0 cubic ft)	0.23 cubic m (8.0 cubic ft)	0.34 cubic m (12.0 cubic ft)
Total Volume	0.20 cubic m (6.9 cubic ft)	0.20 cubic m (6.9 cubic ft)	0.20 cubic m (6.9 cubic ft)	0.20 cubic m (6.9 cubic ft)	0.25 cubic m (9.0 cubic ft)	0.25 cubic m (9.0 cubic ft)	0.42 cubic m (14.8 cubic ft)
Drum Material	Steel	Polyethylene	Steel	Polyethylene	Steel	Polyethylene	Steel
Length (without tow pole)	163 cm (64 inches)	163 cm (64 inches)	163 cm (64 inches)	163 cm (64 inches)	193 cm (86 inches)	193 cm (86 inches)	205.7 cm (81 inches)
Width	86 cm (34 inches)	86 cm (34 inches)	86 cm (34 inches)	86 cm (34 inches)	86 cm (34 inches)	86 cm (34 inches)	142.2 cm (50 inches)
Height	137 cm (54 inches)	137 cm (54 inches)	137 cm (54 inches)	137 cm (54 inches)	137 cm (54 inches)	137 cm 0(54 inches)	150 cm (59 inches)
Weight	250 kg (550 lb)	241 kg (530 lb)	250 kg (550 lb)	241 kg (530 lb)	275 kg (605 lb)	266 kg (585 lb)	508 kg (1120 lb)
Axle	86 to 117 cm (34 to 46 inches) extendable	86 to 117 cm (34 to 46 inches) extendable	86 to 117 cm (34 to 46 inches) extendable	86 to 117 cm (34 to 46 inches) extendable	86 to 117 cm (34 to 46 inches) extendable	86 to 117 cm (34 to 46 inches) extendable	142 cm (56 inches) fixed
Engine	Honda® GX160	Honda® GX160	Honda® GX240	Honda® GX240	Honda® GX240	Honda® GX240	Honda® GX340
Drive	belt	belt	belt	belt	belt	belt	gearbox

Operation

Preparing to Tow the Machine

Important: Ensure that your tow vehicle has towing capacity for the weight of the machine.

Important: Use a Class 2 or larger receiver.

Note: Ensure that your tow vehicle has the appropriate hitch to tow the machine; options include a 50 mm (2 inch) ball hitch or a pintle hitch.

Note: Ensure that the electrical connector of the tow vehicle is compatible with the electrical connector of the machine. The machine uses a standard 4-flat plug. If your tow vehicle has a different type of plug, obtain an adapter from an automotive parts store.

1. Ensure the engine is stopped, the fuel valve is off, and the drum is empty.
2. If the drum has accumulated any water, dump the drum; refer to Dumping the Drum (page 24), steps 1, 3, 4, and 5.
3. Using the dump lever, position the drum so that it is in the mix position (upright) and locked.
4. Close the engine cowl and secure the cowl latches (Figure 18).

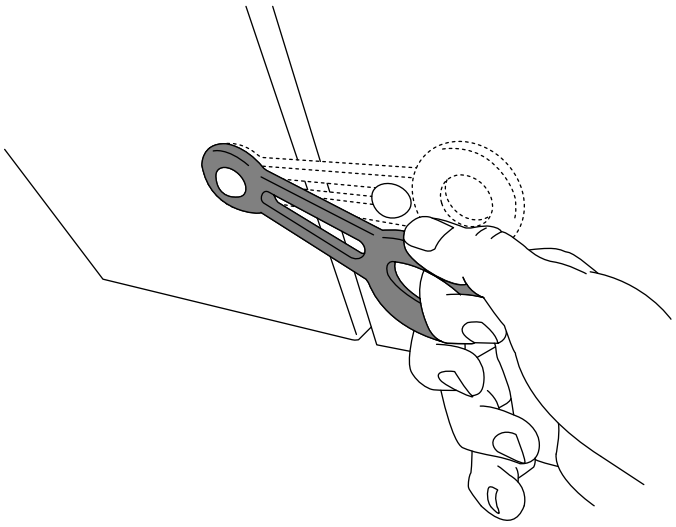

G019741

Figure 18

5. Extend the axle **(Models 68013C, 68014C, 68016C, 68017C, 68020C, and 68021C)**; refer to Extending the Axle—Belt-drive Models (page 17).

Checking the Tires and Wheels

Service Interval: Before each use or daily—Inspect the tires and wheels.

After each use—Torque the lug nuts to 108 to 122 N-m (80 to 90 ft-lb) after towing.

⚠ WARNING

Failure to maintain correct tire pressure may result in tire failure and loss of control, resulting in property damage and serious injury or death.

- **Check the tire pressure frequently to ensure proper inflation. If the tires are not inflated to the correct pressure, they will wear prematurely.**
- **Inspect the tire condition before towing and after any operating accident.**

The DOT tire information is located on the side of each tire. This information gives load and speed ratings. Replacement tires should have the same or better ratings. For more information go to http://www.nhtsa.gov/Vehicle+Safety/Tires.

Note: The various machines in this manual have different weights; refer to Specifications (page 13) to ensure that the tires on your machine meet or exceed the weight requirements of your machine.

1. Visually inspect the tires for damage and wear (Figure 19 and Figure 20)

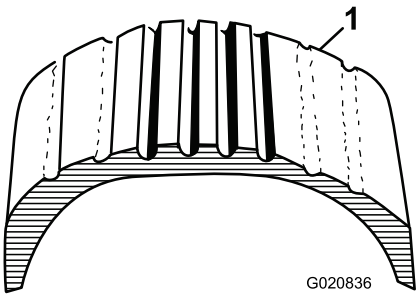

Figure 19

1. Example of tire wear caused by underinflation

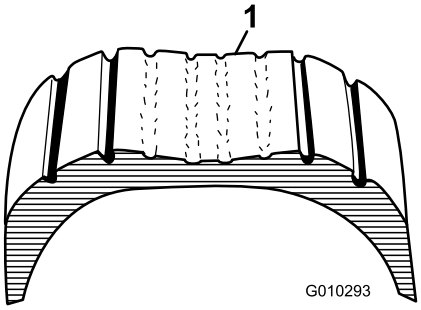

Figure 20

1. Example of tire wear caused by overinflation

2. Ensure that the tires are inflated to the correct air pressure. The following Tire Air Pressure table shows the appropriate air pressure for the tires as installed at the factory.

Important: Always check the information on the actual tires for the correct air pressure requirement.

Important: The most common cause of tire trouble is under-inflation. Maintain full air pressure.

Tire Air Pressure

Model	Tire pressure
68013C, 68014C, 68016C, and 68017C	Max 414 kPa (60 psi)
68020C, 68021C, and 68024C	Max 241 kPa (35 psi)

3. Ensure that the wheel lug nuts are torqued to 108 to 122 N-m (80 to 90 ft-lb). Check the torque of the wheel lug nuts initially and after towing.

Note: Torque the lug nuts in the sequence shown in Figure 21.

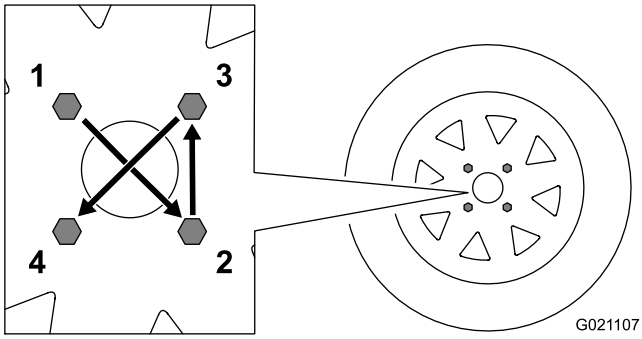

Figure 21

Hitching a Machine with a Stamped Ball Coupler

1. Apply chassis grease to the socket of the coupler and the area of the clamp that contacts the ball. Oil the pivot points and sliding surfaces of the coupler with SAE 30 motor oil.
2. Open the coupler latch (Figure 22).

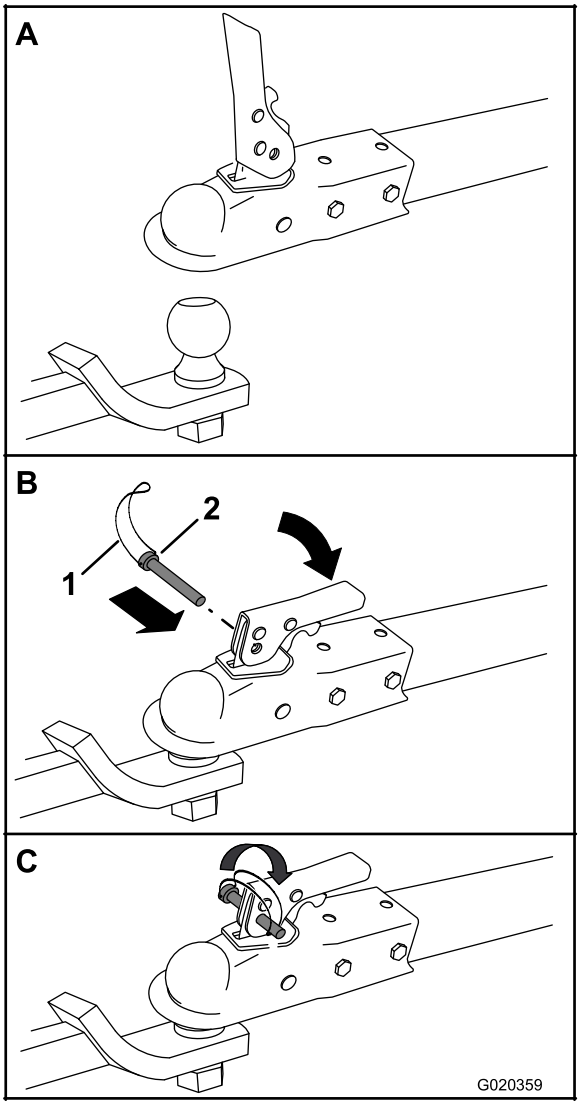

Figure 22

1. Bail
2. Safety pin

3. Position the coupler on top of the hitch ball (Figure 22).
4. Close the coupler latch (Figure 22).
5. Open the bail on the safety pin and insert the pin through the hole in the latch (Figure 22).
6. Rotate the free end of the bail over the end of the safety pin that is protruding through the latch (Figure 22).
7. Connect the wire plug of the tow vehicle to the wire plug of the machine; refer to Connecting the Lighting Wire Harness (page 17).

Hitching a Machine with a Forged Ball Coupler

1. Apply removable thread-locking compound to the threads of the coupler bolt to prevent the coupler handle from coming loose (Figure 23).

Important: Apply thread-locking compound as needed in the future.

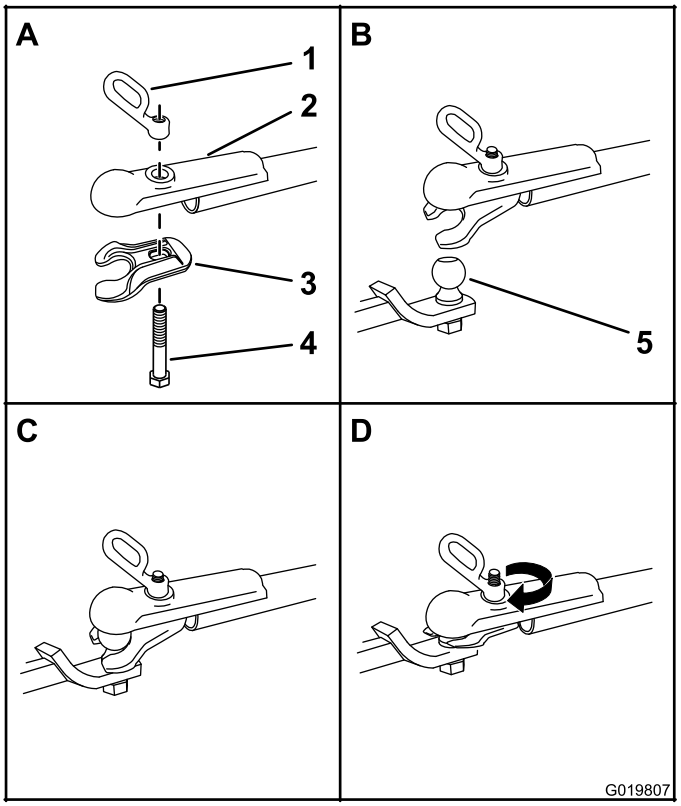

Figure 23

1. Coupler handle
2. Coupler
3. Clamp
4. Bolt
5. Hitch ball

2. Apply chassis grease to the socket of the coupler and the area of the clamp that contacts the ball.
3. Push the coupler bolt up through the coupler clamp and the coupler top, and connect the coupler handle to the bolt (Figure 23).
4. Position the coupler so the socket is on top of the hitch ball and the clamp is under the ball.
5. Turn the coupler handle clockwise to thread it onto the bolt until it is secure (Figure 23).

Note: Use a wrench to keep the bolt from spinning.

6. Connect the wire plug of the tow vehicle to the wire plug of the machine; refer to Connecting the Lighting Wire Harness (page 17).

Hitching a Machine with a Pintle Hitch Tow Pole

1. Remove the pin from the pintle hitch and open it (Figure 24).

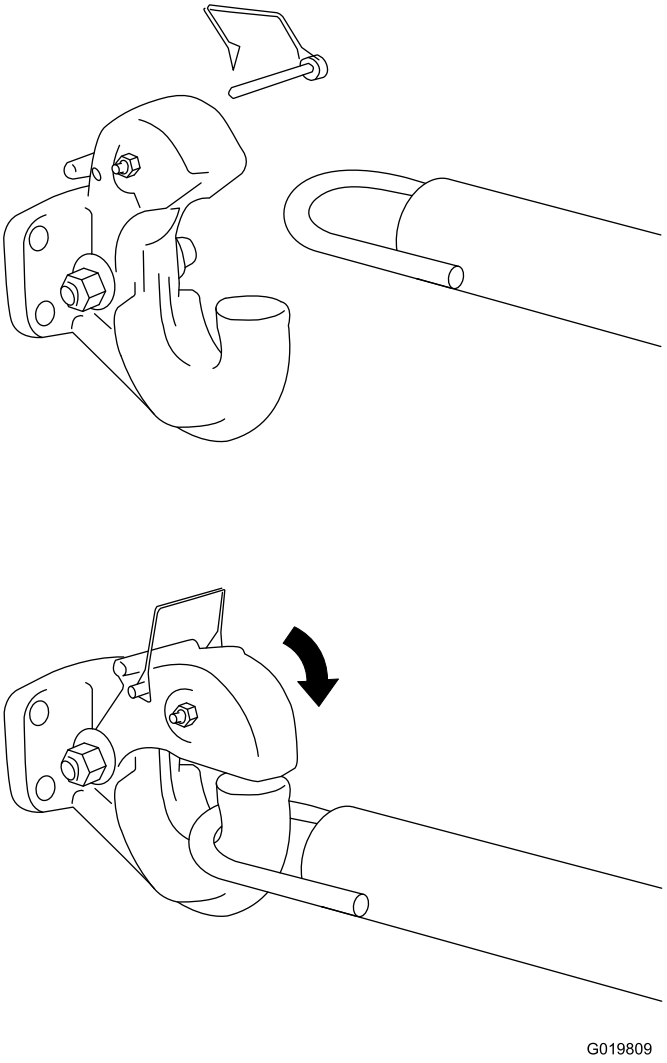

Figure 24

2. Position the ring on the tow pole onto the hook of the pintle hitch (Figure 24).
3. Close the top of the pintle hitch and secure it with the pin (Figure 24).
4. Connect the wire plug of the tow vehicle to the wire plug of the machine; refer to Connecting the Lighting Wire Harness (page 17).

Connecting the Safety Chains to the Tow Vehicle

Connect the safety chain to the machine and the tow vehicle as follows:

1. Pull the safety chain through the slots in the keyholes located in the front post of the machine, so that the lengths on each side are equal (Figure 25).
2. Cross both lengths of chain **under** the tow pole.

   Note: Crossing the chains decreases the chances of the front of the machine dropping to the ground if the hitch does not hold the connection.

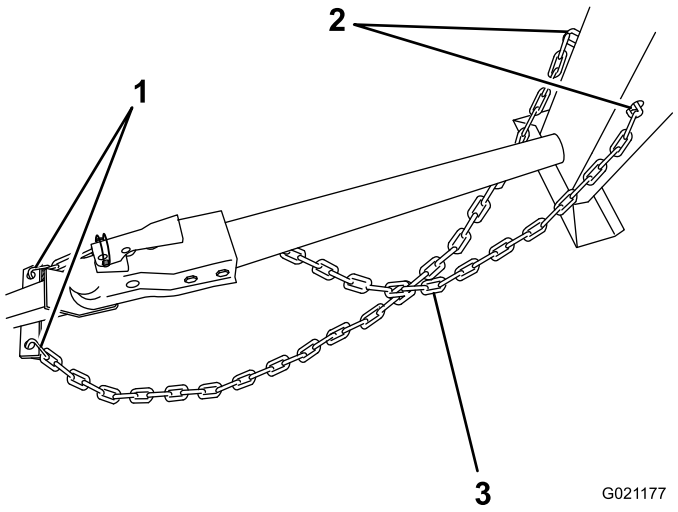

Figure 25

1. Connecting links
2. Keyholes in front post
3. Chain crossed under tow pole

3. Connect each length of chain to the safety chain mounting point on the tow vehicle with the connecting links (Figure 26).

   Important: Ensure that the chain has enough slack for turning around corners when towing the machine.

   Note: Stow the excess chain inside the bottom of the front post by pushing it into the keyholes and latching the appropriate links into the keyhole slots.

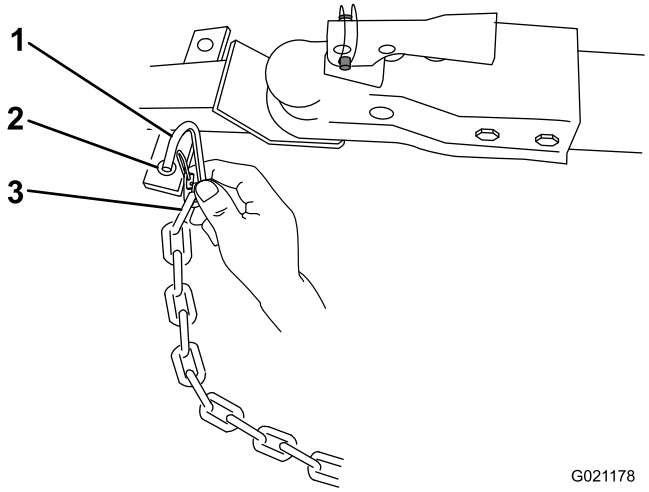

Figure 26

1. Connecting link
2. Safety chain mounting point on tow vehicle
3. Chain link

Connecting the Lighting Wire Harness

Connect the electrical plug of the machine with the electrical plug of the tow vehicle, as shown in Figure 27.

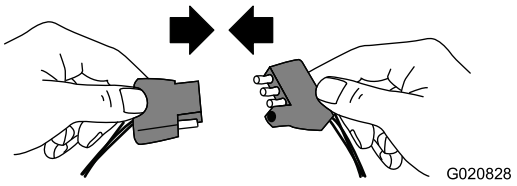

Figure 27

Note: The machine uses a standard 4-flat plug. If your tow vehicle has a different type of plug, obtain an adapter from an automotive parts store.

Important: Routinely check the lights to ensure that they are working properly, including the tail lights, brake lights, and each appropriate turn signal.

Checking the Lights

- Ensure that the tail lights of the machine illuminate when you turn on the headlights of tow vehicle.
- Ensure that the brake lights of the machine illuminate when you press the brake pedal of the tow vehicle.
- Ensure that the appropriate turn signal flashes when you operate the corresponding turn signal of the tow vehicle.

Extending the Axle—Belt-drive Models

Models 68013C, 68014C, 68016C, 68017C, 68020C, and 68021C

⚠ WARNING

The machine is not stable when towing it with the axle in the narrow position.

Tow the machine with the axle in the wide position.

Important: Adjust the axle to the narrow position only to move the machine through a narrow access point, such as the gate of a fence or the doorway of a building.

Preparing to Change the Axle Width

1. Move the machine to a level job-site surface.
2. Disconnect the machine from the tow vehicle.
3. Chock the tires.
4. Ensure that the drum is empty and in the mix position (upright).
5. Ensure that the drum latch is engaged and that the drum does not rotate toward the dump position.

Adjusting the Axle Width

⚠ WARNING

Mechanical or hydraulic jacks may fail to support the machine and cause serious injury.

Use jack stands when supporting the machine.

1. Align a jack with an adequate lift height and weight capacity under the axle; refer to Specifications (page 13).
2. Lift the machine until the tires are off the ground.
3. Use a jack stand at each support point on the rear frame extension (Figure 28).

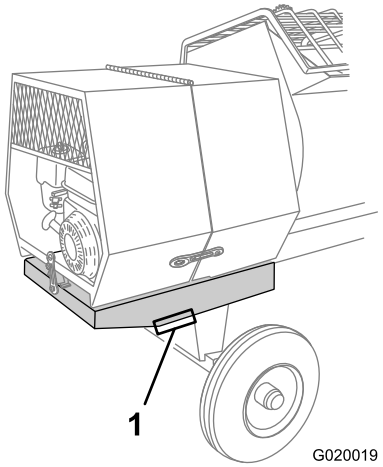

Figure 28

1. Support point (2)

4. Remove the bolts and nuts that secure the inner axle to the outer axle (Figure 29).

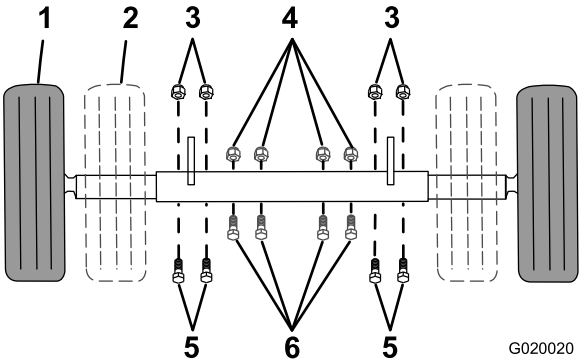

Figure 29

1. Wide position (towing)
2. Narrow position
3. Nut (wide position)
4. Nut (narrow position)
5. Bolt (wide position)
6. Bolt (narrow position)

5. Align the inner axle to the desired position as follows:

- Slide each side of the axle inward to the narrow position (Figure 29).
- Slide each side of the axle outward to the wide (tow) position (Figure 29).

6. Align the holes of the inner axle with the holes of the outer axle.
7. Insert the bolts through the axle holes (Figure 29).
8. Thread the nuts onto the bolts, and torque the nuts to 87 N-m (64 ft-lb).

Towing the Machine

⚠ WARNING

Towing the machine at high speed increases the risk of a hitch malfunction and tire failure. Higher speeds also increase the momentum of the machine and braking distance. If the machine becomes detached from the tow vehicle at high speed, it could cause damage to property, or injury or death to bystanders.

Do not exceed 88 km/h (55 mph) when towing the machine. For poor road conditions or inclement weather, reduce speed accordingly.

⚠ WARNING

Towing the machine with material in the drum increases the risk of a hitch malfunction and tire failure. In addition, material could bounce out of the drum and hit other vehicles and/or people. Material in the drum increases the weight, which affects momentum and braking distance.

Do not tow the machine with material in the drum.

- Review and understand Safe Operating Practices (page 4).
- Test the brakes of the tow vehicle before towing.
- Avoid sudden starts and stops while towing the machine.

Preparing to Use the Machine

- Review all of the safety decals on the machine.
- Use a hard-hat, hearing protection, a shirt with long sleeves buttoned at the wrists, tight-fitting gloves without draw strings or loose cuffs, eye protection, and a dust mask or respirator. A mesh visor alone does not provide sufficient eye protection; supplement with protective glasses.
- Ensure that you are familiar with the safety regulations and shutdown procedures described in the *Operator's Manual* and the *Engine Owner's Manual*.
- Ensure that all guards are in place and in good condition.
- Ensure that the paddles are in place and in good condition.
- Check the fuel and oil levels of the engine.
- When preparing to mix material:
  1. Move the machine to a level job-site surface.
  2. Remove the machine from the tow vehicle.
  3. Chock the front and back of the tires to prevent the machine from moving.
  4. Ensure that the drum is in the mix position (upright).
  5. Ensure that the drum latch is engaged and that the drum does not rotate toward the dump position.

Opening and Closing the Cowl

Opening the Cowl

1. At the side of the machine where the front cowl and rear cowl meet, grasp the ring of the latch and pull it off from the latch anchor on the rear cowl (Figure 30).

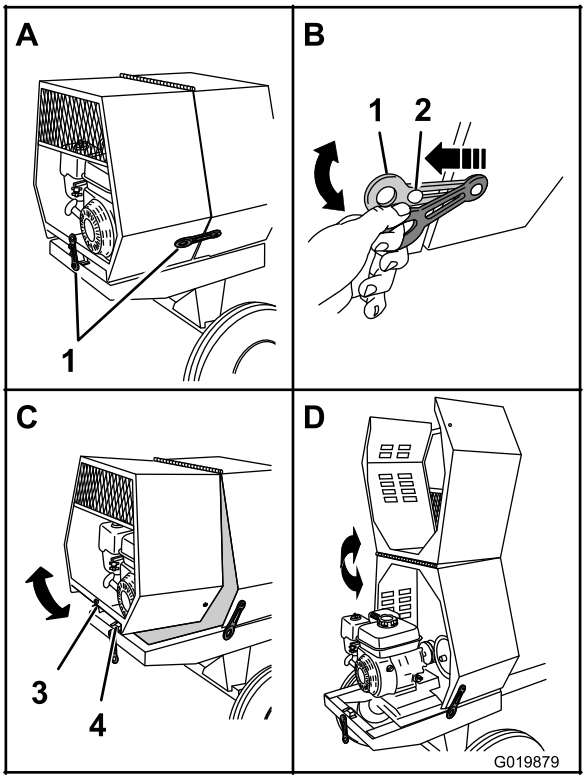

Figure 30

1. Latch
2. Latch anchor
3. Receiver
4. V-fitting

2. Repeat step 1 on the opposite side of the machine.
3. At the back of the machine where the rear cowl meets the frame of the machine, grasp the ring of the latch and pull it off from the latch anchor on the cowl (Figure 30).

4. Rotate the rear cowl up and forward until it is fully positioned on top of the front cowl (Figure 30).

Closing the Cowl

1. Rotate the rear cowl rearward and down until the receiver at the bottom center of the cowl is aligned with the V-fitting and flush on the frame of the machine (Figure 30).
2. At the back of the machine, grasp the ring of the latch and pull it on to the latch anchor on the rear cowl.
3. At the side of the machine, grasp the ring of the latch and pull it onto the latch anchor on the rear cowl.
4. Repeat step 3 on the opposite side of the machine (Figure 30).

Adding Fuel

- For best results, use only clean, fresh, unleaded gasoline with an octane rating of 87 or higher ((R+M)/2 rating method).
- Oxygenated fuel with up to 10% ethanol or 15% MTBE by volume is acceptable.
- Do not use ethanol blends of gasoline (such as E15 or E85) with more than 10% ethanol by volume. Performance problems and/or engine damage may result which may not be covered under warranty.
- Do not use gasoline containing methanol.
- Do not store fuel either in the fuel tank or fuel containers over the winter unless a fuel stabilizer is used.
- Do not add oil to gasoline.

⚠ DANGER

In certain conditions, fuel is extremely flammable and highly explosive. A fire or explosion from fuel can burn you and others and can damage property.

- **Fill the fuel tank outdoors, in an open area, when the engine is cold. Wipe up any fuel that spills.**
- **Never fill the fuel tank inside an enclosed trailer.**
- **Do not fill the fuel tank completely full. Add fuel to the fuel tank until the level is no higher than the screen on the filter in the fuel tank. This empty space in the tank allows the fuel to expand.**
- **Never smoke when handling fuel, and stay away from an open flame or where fuel fumes may be ignited by a spark.**
- **Store fuel in an approved container and keep it out of the reach of children. Never buy more than a 30-day supply of fuel.**
- **Do not operate without the entire exhaust system in place and in proper working condition.**

⚠ DANGER

In certain conditions during fueling, static electricity can be released causing a spark which can ignite the fuel vapors. A fire or explosion from fuel can burn you and others and can damage property.

- **Always place fuel containers on the ground away from your vehicle before filling.**
- **Do not fill fuel containers inside a vehicle or on a truck or trailer bed because interior carpets or plastic truck bed liners may insulate the container and slow the loss of any static charge.**
- **When practical, remove fuel-powered equipment from the truck or trailer and fuel the equipment with the wheels on the ground.**
- **If this is not possible, then refuel such equipment on a truck or trailer from a portable container, rather than from a fuel dispenser nozzle.**
- **If a fuel dispenser nozzle must be used, keep the nozzle in contact with the rim of the fuel tank or container opening at all times until fueling is complete.**

⚠ WARNING

Fuel is harmful or fatal if swallowed. Long-term exposure to vapors can cause serious injury and illness.

- **Avoid prolonged breathing of vapors.**
- **Keep your face away from the nozzle and the fuel tank or conditioner opening.**
- **Keep fuel away from your eyes and skin.**

Important: Do not mix oil with fuel.

Recommended Fuel

Unleaded Gasoline	
U.S.	Pump octane rating 87 or higher
Except U.S.	Research octane rating 92 or higher Pump octane rating 87 or higher

Using Fuel Stabilizer/Conditioner

Use a fuel stabilizer/conditioner in the machine to keep the fuel fresh during storage of 90 days or less. If you are storing the machine for longer, drain the fuel tank; refer to Storing the Machine (page 44).

Important: Do not use fuel additives containing methanol or ethanol.

Add the correct amount of fuel stabilizer/conditioner to the fuel, and follow the directions of the manufacturer.

Note: Fuel stabilizer/conditioner is most effective when mixed with fresh fuel. To minimize the chance of varnish deposits in the fuel system, use fuel stabilizer at all times.

Filling the Fuel Tank

Model(s)	Fuel tank capacity
68013C and 68014C	3.1 L (0.82 US gallons)
68016C, 68017C, 68020C, 68021C	5.3 L (1.40 US gallons)
68024C	6.1 L (1.61 US gallons)

1. Park the machine on a level surface, stop the engine, and allow the engine to cool.
2. Clean around the fuel cap and remove it (Figure 31).

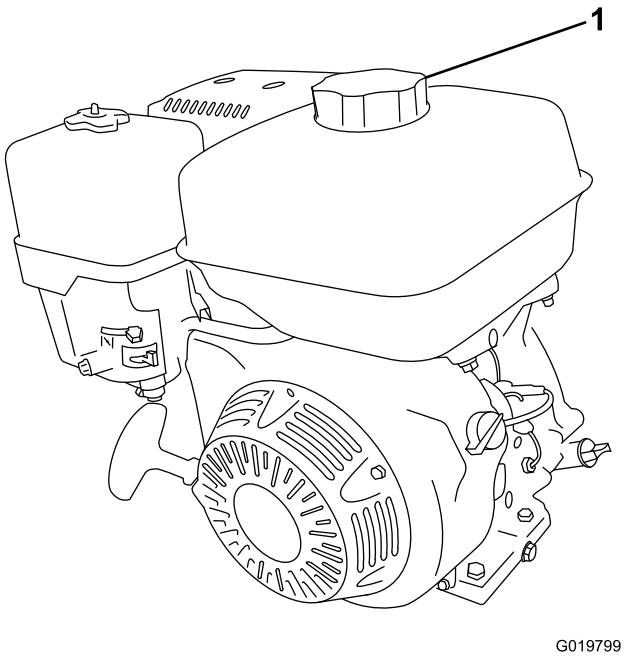

Figure 31

1. Fuel cap

3. Add unleaded gasoline to the fuel tank, until the level is at the bottom of the maximum fuel level, as shown in Figure 32.

   Important: This space in the tank allows gasoline to expand. Do not fill the fuel tank completely full.

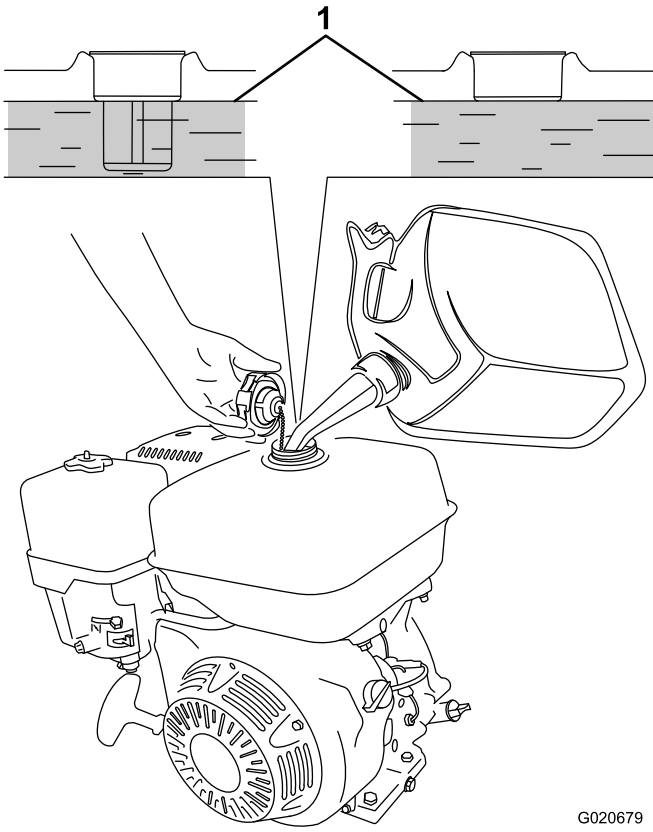

Figure 32

1. Maximum fuel level

4. Install the fuel cap securely (Figure 31).
5. Wipe up any gasoline that may have spilled.

Checking the Engine Oil Level

Service Interval: Before each use or daily

Important: Use 4-cycle engine oil that meets or exceeds the requirements for API service category *SJ, SL, SM, or higher.*

Model(s)	Crankcase capacity
68013C and 68014C	0.58 L (0.61 US qt)
68016C, 68017C, 68020C, 68021C, 68024C	1.1 L (1.2 US qt)

Important: If the oil level in the crankcase is too low or too high and you run the engine, you may damage the engine. This type of damage is not covered by the warranty.

Note: Use SAE 10W-30 for general use. You can use the other viscosities shown in the chart when the average temperature in your area is within the indicated range (Figure 33).

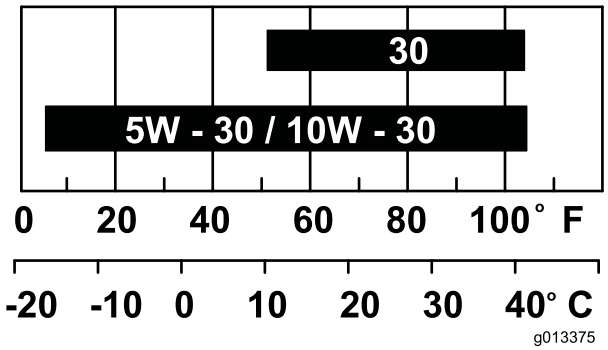

Figure 33

1. Place the machine on a flat, level surface, and stop the engine.
2. Allow the engine to cool.
3. Clean around the oil dipstick.
4. Remove the oil-fill cap/dipstick and wipe the end clean (Figure 34).

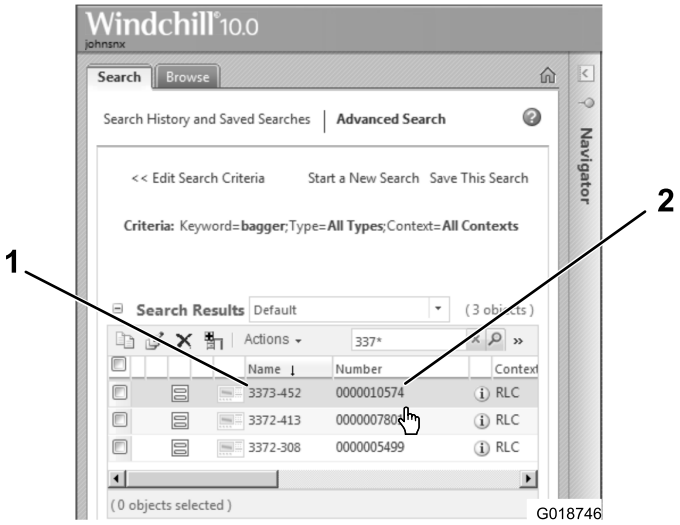

Figure 34

1. Fill port
2. Dipstick
3. Oil-level upper limit
4. Oil-level lower limit

5. Slide the dipstick fully into the fill port without threading it into the port (Figure 34).
6. Remove the dipstick and look at the end. If the engine oil level is low, slowly pour only enough oil into the fill port to raise the level to the Full mark on the dipstick (Figure 34).

   Note: Toro Premium Engine Oil is available from your Authorized Toro Dealer.
7. Replace and secure the dipstick (Figure 34).

Starting and Stopping the Engine

Starting the Engine

1. On the engine, move the throttle lever away from the Min position, 1/3 of the way toward the Max position (Figure 35); refer to Throttle Lever (page 12).

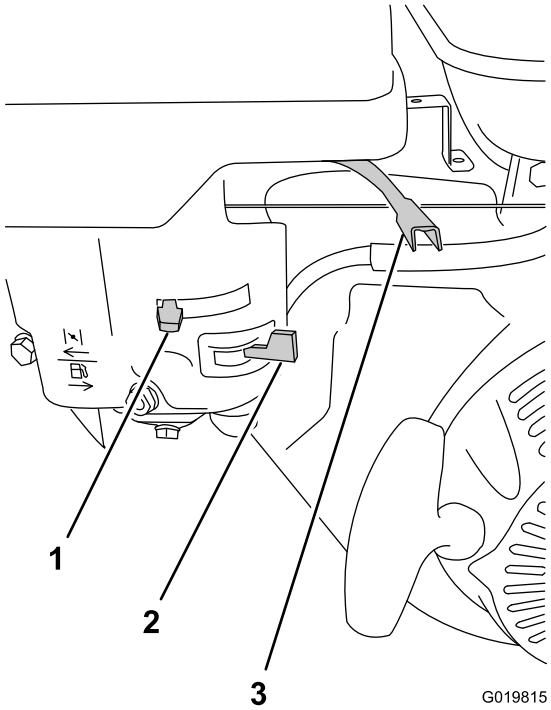

Figure 35

1. Choke lever
2. Fuel valve
3. Throttle lever

2. Move the lever of the fuel valve to the On position—all the way to the right (Figure 35); refer to Fuel Valve (page 12).
3. Position the choke lever as follows:
   - To start a cold engine, move the choke lever to the Closed position—all the way to the left (Figure 35); refer to Choke Lever (page 12).
   - To start a warm engine, move the choke lever in the Open position—all the way to the right.
4. Rotate the engine switch to the On position (Figure 35); refer to Engine On/Off Switch (page 12).
5. Pull the recoil-start handle lightly until you feel resistance, then pull the handle briskly. Return the recoil-start handle gently (Figure 36).

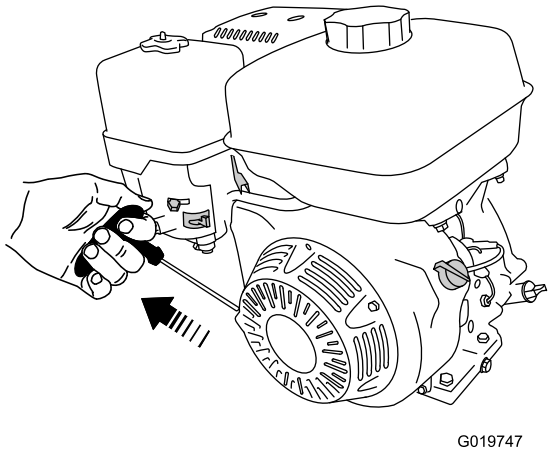

G019747

Figure 36

Note: If the choke lever is set to the Closed position to start the engine, gradually move the choke lever back toward the Open position as the engine warms up. If the engine stalls or hesitates, move the choke lever back toward the Closed position until the engine runs smooth. Allow the engine to warm up, then move the choke lever to the Open position; refer to Choke Lever (page 12).

Stopping the Engine

⚠ WARNING

In an emergency situation, stop the engine immediately.

Important: During normal operation, if the engine has been working hard or is hot, let it idle for a minute before stopping the engine. This helps to cool the engine before stopping.

1. Ensure that the choke lever is in the Off position (Figure 35); refer to Choke Lever (page 12).
2. Move the throttle lever to the Min position (Figure 35); refer to Throttle Lever (page 12).
3. Rotate the engine switch to the Off position; refer to Engine On/Off Switch (page 12).

Controlling the Paddles

⚠ DANGER

This machine is capable of amputating hands.

- **Stay in the operator's position while the machine is running.**
- **Keep all bystanders a safe distance from the machine.**
- **Stop the machine immediately if any people or animals enter the work area.**
- **Never place any part of your body into a position that causes an unsafe operating condition.**

Use the clutch lever to control the power transmission to the paddles of the machine.

Controlling the Paddles—Belt-drive Models

Models 68013C, 68014C, 68016C, 68017C, 68020C, and 68021C only

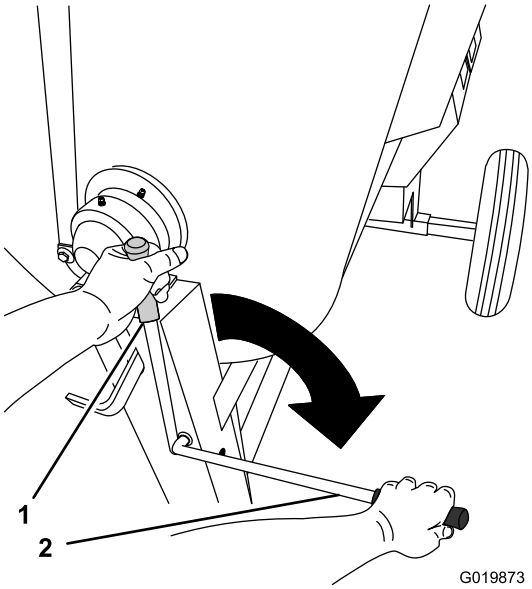

G019873

Figure 37

1. Off position
2. On position

Controlling the Paddles—Gear-case Model

Model 68024C only

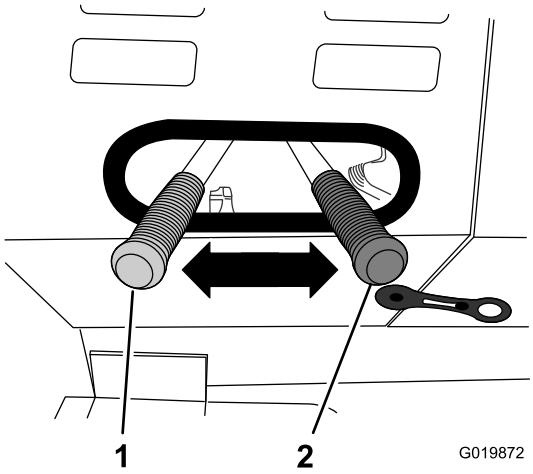

Figure 38

1. On position
2. Off position

Mixing the Material

⚠ DANGER

Eye and skin contact with concrete materials and breathing the dust involved is hazardous to your health.

- **Ensure that there is adequate air ventilation.**
- **Wear a dust mask to prevent inhalation of dust while using the machine; refer to Safe Operating Practices (page 4).**
- **Avoid direct contact of cement and concrete materials with skin and eyes.**

⚠ DANGER

Contact with the mixing paddles could cause damage or injury.

Never put your hands or tools inside the drum while the engine is running.

Important: Do not add more material than the batch capacity of the machine; refer to Specifications (page 13).

Note: Follow the manufacturer's instructions that are printed on the packaging of the product you are using.

Mixing a Batch of Material in the Machine

1. Ensure that there is no old, loose material in the drum that can contaminate the batch of material; refer to Cleaning the Drum (page 24) and Dumping the Drum (page 24), then return the drum to the upright position.

   Note: Ensure that the drum is in the mix position (upright) and the drum latch is engaged.
2. Move the clutch lever to the Off position; refer to Controlling the Paddles (page 22).
3. Start the engine; refer to Starting the Engine (page 21).

   Note: Allow the engine to warm-up at 2/3 throttle for 1 to 2 minutes.
4. Set the throttle lever on the engine to the Max position; refer to Throttle Lever (page 12).
5. Move the clutch lever to the On position; refer to Controlling the Paddles (page 22).
6. Add the ingredients for the batch as follows:
   A. Pour water into the drum through the grating of the drum guard.
   B. Add the plaster, cement, or other binding material.

      Note: You can open bags of cement, plaster, and binding materials by lowering the bag onto the bag splitter (Figure 39).

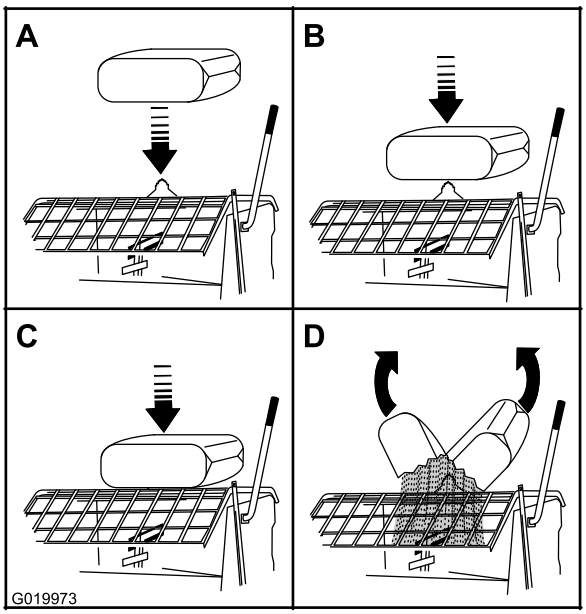

Figure 39

   C. If you are using sand and/or other reinforcing materials, add them into the drum.
7. Allow the paddles to mix the material until the ingredients have a uniform appearance.

   Note: If needed, add water or plaster, cement, or other binding material until the consistency of the batch is correct.

8. Release the drum latch and dump the drum; refer to Dumping the Drum (page 24).

Using the Drum

⚠ DANGER

Contact with the mixing paddles could cause damage or injury.

Never put your hands inside the drum while the engine is running.

Dumping the Drum

Note: When dumping a batch of material, leave the engine running and the clutch in the On position so the rotating paddles help discharge the material.

1. Align a wheelbarrow or similar container of adequate capacity in the path of the drum opening.
2. Grasp the dump handle with your left hand (Figure 40).

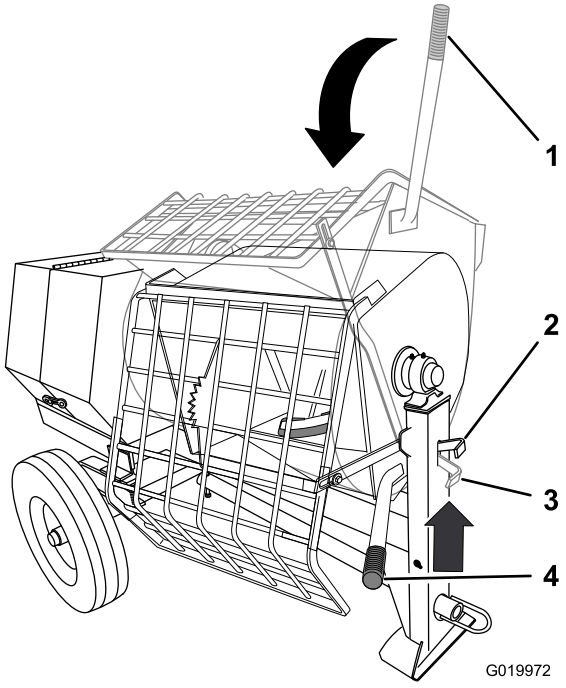

Figure 40

1. Dump handle (mix position)
2. Drum latch (release position)
3. Drum latch (locked position)
4. Dump handle (dump position)

Note: When dumping a batch of material, align a wheelbarrow or a similar container of adequate capacity beneath the chute.

3. Lift the handle of the drum latch (Figure 40).
4. With both hands on the dump handle, rotate it counterclockwise to discharge the contents of the drum (Figure 40).

Note: Allow the machine to completely discharge the contents of the drum.

5. Rotate the dump handle **clockwise** until the drum latch locks the drum in the upright position (Figure 40).
6. After discharging a batch of material, clean the drum; refer to Cleaning the Drum (page 24).

Note: This step will clean the paddles and drum between batches and prevent dried material from forming, and contaminating the next batch of material.

Cleaning the Drum

Important: Do not strike on the drum with a shovel, hammer, or any other device to loosen any accumulated dried materials.

1. Stop the rotation of the paddles by moving the clutch lever to the Off position; refer to Controlling the Paddles (page 22).
2. Rotate the engine On/Off switch to the Off position; refer to Stopping the Engine (page 22).
3. Ensure that the drum is in the mix position (upright); refer to Dumping the Drum (page 24), step 5.
4. Spray the machine with water to remove any accumulated material.
5. Start the engine; refer to Starting the Engine (page 21).
6. Start the rotation of the paddles by moving the clutch lever to the On position; refer to Controlling the Paddles (page 22).
7. Dump the drum; refer to Dumping the Drum (page 24).

Adjusting the Paddle Blades

Note: Adjusting the paddle blades is optional.

1. Stop the engine and wait for all moving parts to stop.
2. Disconnect the wire from the spark plug; refer to Disconnecting the Spark-plug Wire (page 28).
3. Remove the nuts and bolts that secure the grate to the drum, and remove the grate (Figure 41, Figure 42, or Figure 43).

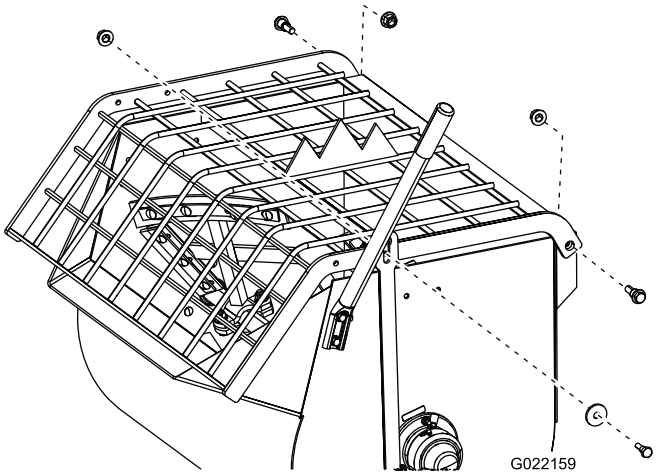

Figure 41
Models 68013C, 68016C, 68020C

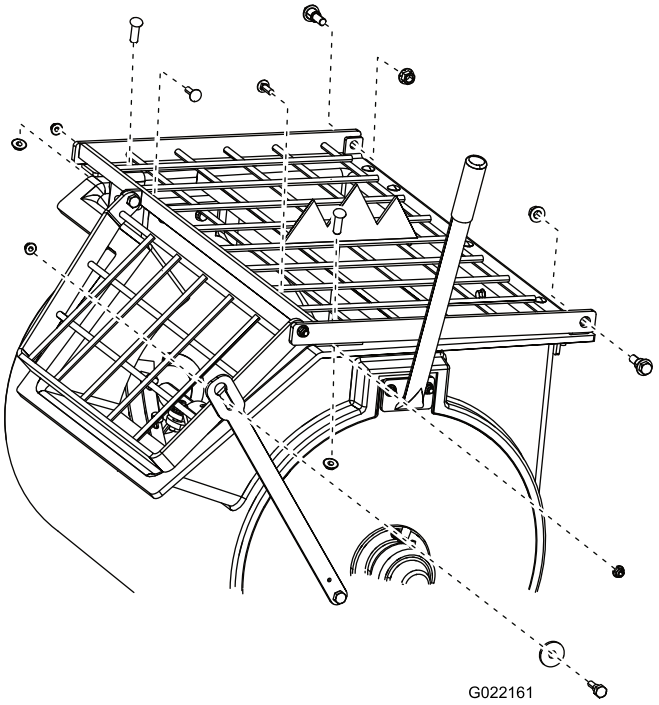

Figure 42
Models 68014C, 68017C, 68021C

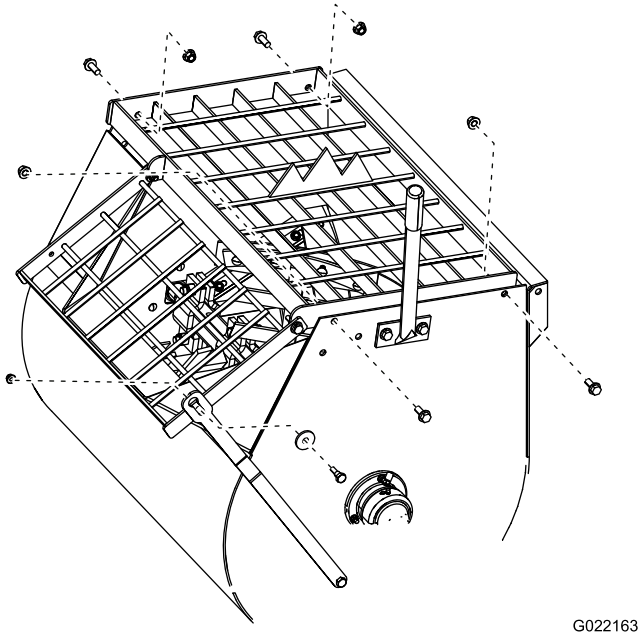

Figure 43
Model 68024C

4. Loosen the nuts and bolts that secure the paddle blades to the paddles (Figure 44, Figure 45, or Figure 46).

   Note: If necessary, tip the drum to the dump position to access the paddles.

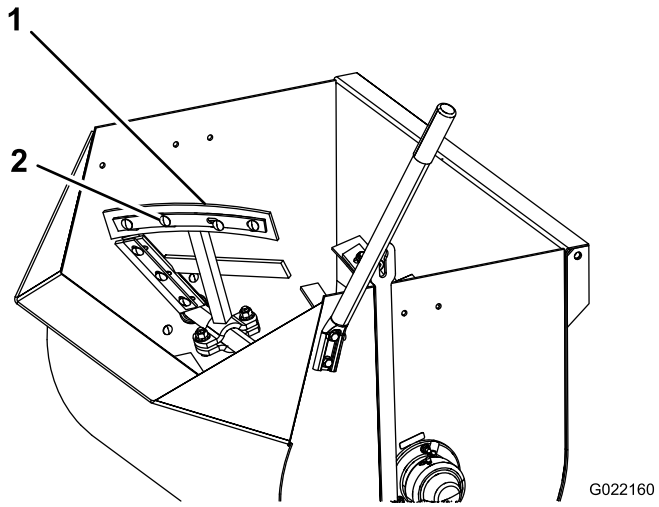

Figure 44
Models 68013C, 68016C, 68020C

1. Paddle blade
2. Nut and bolt

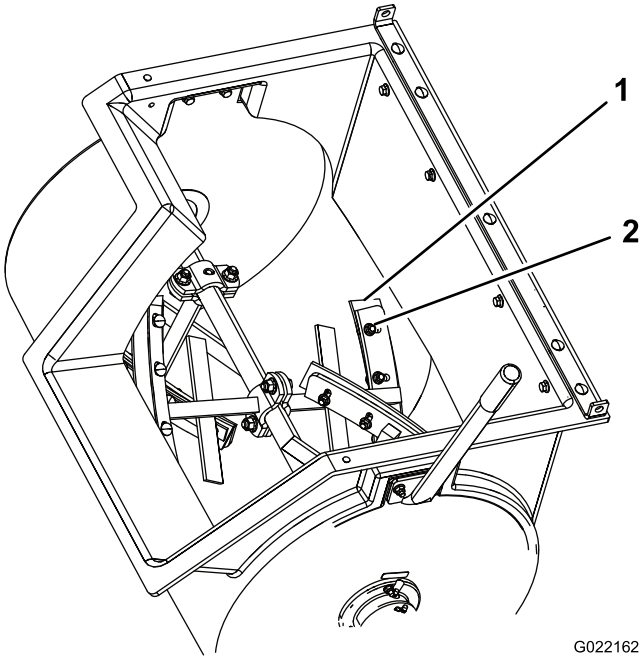

Figure 45
Models 68014C, 68017C, 68021C

1. Paddle blade
2. Nut and bolt

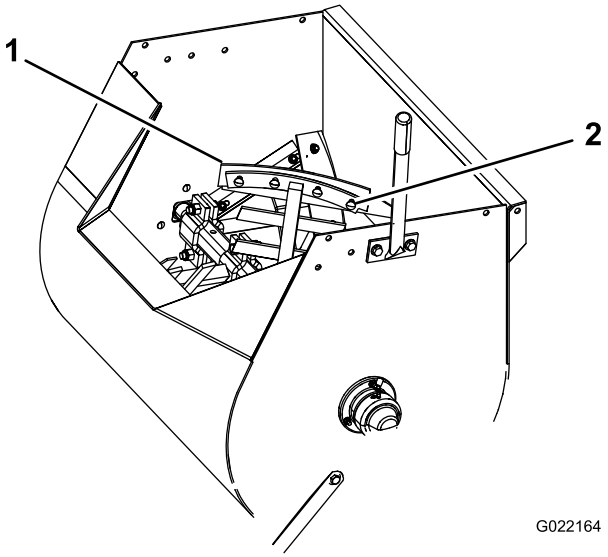

Figure 46
Model 68024C

1. Paddle blade
2. Nut and bolt

5. Move the paddle blades to the preferred position, and tighten the nuts and bolts to secure the blades to the paddles.

   Note: Ensure that the clutch lever is in the Off position, and rotate the paddles as needed.

6. Install the grate with the nuts and bolts that you removed in step 3, and tighten the nuts and bolts until they are secure.

Maintenance

Important: **Before performing any maintenance procedures, first stop the engine, wait 5 minutes to allow all moving parts to come to a complete stop and cool, and disconnect the spark-plug wire.**

Recommended Maintenance Schedule(s)

Maintenance Service Interval	Maintenance Procedure
After the first 20 hours	• Change the reduction-case oil **(Models 68013C and 68014C only).**
After the first 25 hours	• Change the engine oil. • Check the gear-case clutch **(Model 68024C only).** • Inspect the belts and adjust as necessary.
Before each use or daily	• Inspect the tires and wheels. • Check the engine oil level. • Inspect the air-cleaner elements. • Check the reduction-case oil **(Models 68013C and 68014C only).** • Check the clutch operation **(Model 68024C only).**
After each use	• Torque the lug nuts to 108 to 122 N-m (80 to 90 ft-lb) after towing. • Clean the drum between mixing batches of material. • Lubricate the trunnions. • Clean the machine.
Every 40 hours	• Check the gear-case oil **(Model 68024C only).** • Inspect the belts and adjust as necessary. • Check the clutch operation **(Models 68013C, 68014C, 68016C, 68017C, 68020C, and 68021C only).**
Every 50 hours	• Clean the air-cleaner elements. Clean them more frequently in dusty operating conditions.
Every 100 hours	• Change the engine oil. • Check the spark plug. • Clean the spark arrester. • Clean the sediment cup. • Change the reduction-case oil **(Models 68013C and 68014C only).**
Every 300 hours	• Replace the paper air-cleaner element. Replace it more frequently in dusty operating conditions. • Replace the spark plug.
Every 800 hours	• Replace the gear-case oil **(Model 68024C only).**
Monthly	• Lubricate the pillow-block bearings.
Yearly or before storage	• Clean the fuel sediment cup.
Every 2 years	• Replace the belts.

Important: **Refer to your *Engine Operator's Manual* for additional maintenance procedures.**

Premaintenance Procedures

Preparing the Machine for Maintenance

1. Park the machine on a level surface.
2. Remove the machine from the tow vehicle.
3. Chock the tires.
4. Open the rear cowl; refer to Opening and Closing the Cowl (page 18).
5. Ensure that the engine and muffler are cool.
6. Disable the engine; refer to Disconnecting the Spark-plug Wire (page 28).

Disconnecting the Spark-plug Wire

Pull the spark-plug wire off the terminal of the spark plug (Figure 47).

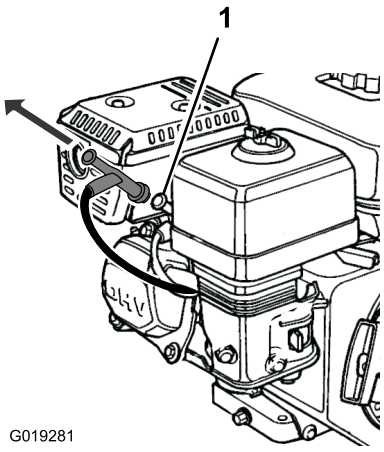

Figure 47

1. Spark plug

Removing and Installing the Divider Plate

You need to remove the divider plate to provide access before performing some maintenance procedures.

Note: Model 68024C does not have a divider plate.

Removing the Divider Plate

1. Unlatch and open the cowl; refer to Opening the Cowl (page 18).
2. Use a wrench to remove the 4 bolts that secure the divider plate to the front cowl.

   Note: Keep the bolts for installing the divider plate.

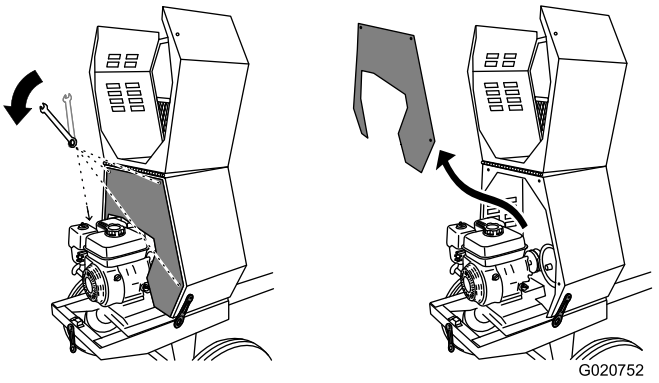

Figure 48

3. To remove the divider plate, lift it upward and rotate it counterclockwise so that it clears various engine components.

Installing the Divider Plate

1. Guide the divider plate into position against the front cowl.

   Note: Start with the divider plate rotated slightly counterclockwise, and then rotate it clockwise while lowering it into position.

   Ensure that the divider plate is not backward.

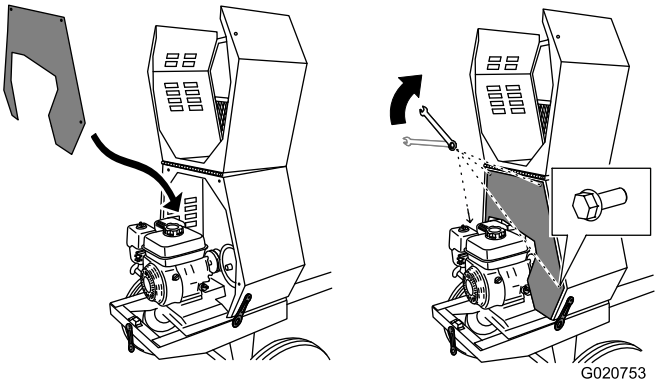

Figure 49

2. Align the bolt holes in the divider plate and the front cowl.
3. Install each of the 4 bolts, and hand-tighten them to prevent cross-threading.
4. Tighten the bolts with a wrench until they are secure.

Lubrication

Lubricating the Bearings and Seals

Service Interval: After each use—Lubricate the trunnions.

Monthly—Lubricate the pillow-block bearings.

Note: The pillow-block bearings are inside the cowl—remove the divider plate to access them; refer to Removing the Divider Plate (page 28).

Model 68024C does not have a divider plate.

Grease Type: #2 general-purpose lithium-based grease.

1. Clean around each grease fitting with a rag and lift the plastic cap off the grease fitting (Figure 50).

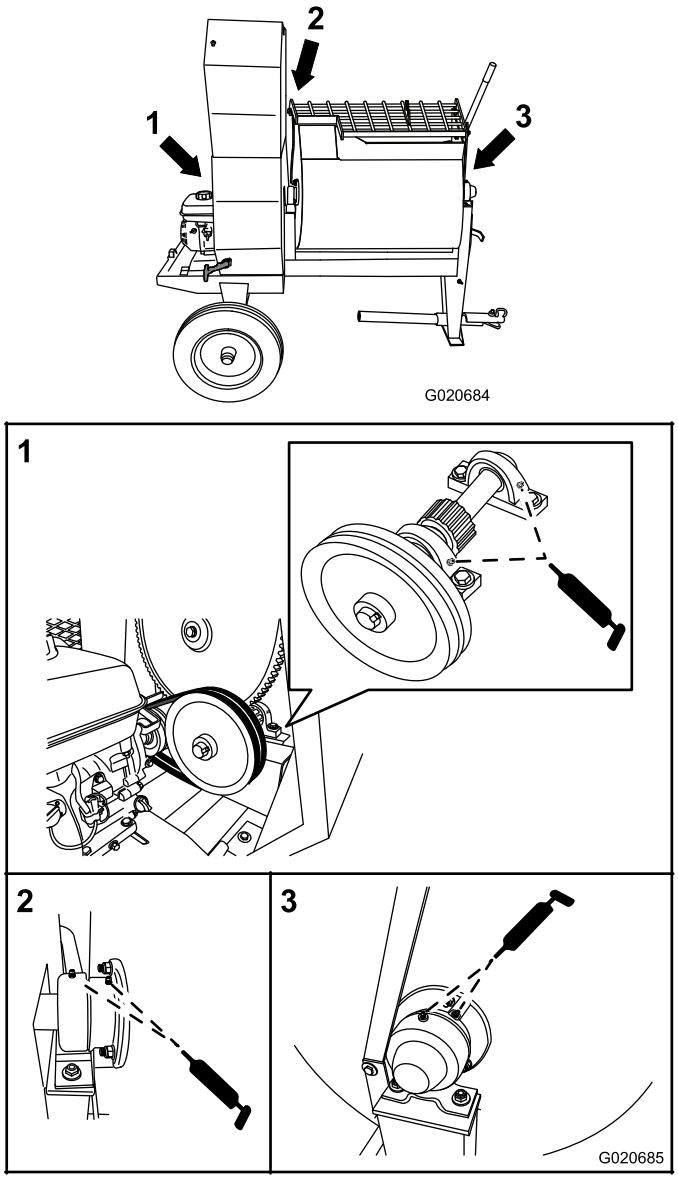

Figure 50

1. Pillow-block bearings
2. Rear trunnion
3. Front trunnion

2. Pump grease into each fitting as follows:
   - For the pillow-block bearings, pump 1 shot of grease into each fitting (Figure 50).
   - For the trunnions, pump several shots of grease into each fitting until it starts to ooze out of the bearing housing (Figure 50).

   Important: Pump grease in slowly and carefully to prevent damage to the bearing seals.
3. Wipe up any excess grease.

Engine Maintenance

Servicing the Air Cleaner

Service Interval: Before each use or daily—Inspect the air-cleaner elements.

Every 50 hours—Clean the air-cleaner elements. Clean them more frequently in dusty operating conditions.

Every 300 hours/Yearly (whichever comes first)—Replace the paper air-cleaner element. Replace it more frequently in dusty operating conditions.

Important: Do not operate the engine without the air-filter assembly; extreme engine damage will occur.

1. Stop the engine and wait for all moving parts to stop.
2. Disconnect the wire from the spark plug; refer to Disconnecting the Spark-plug Wire (page 28).
3. Remove the nut that secures the cover (Figure 51).

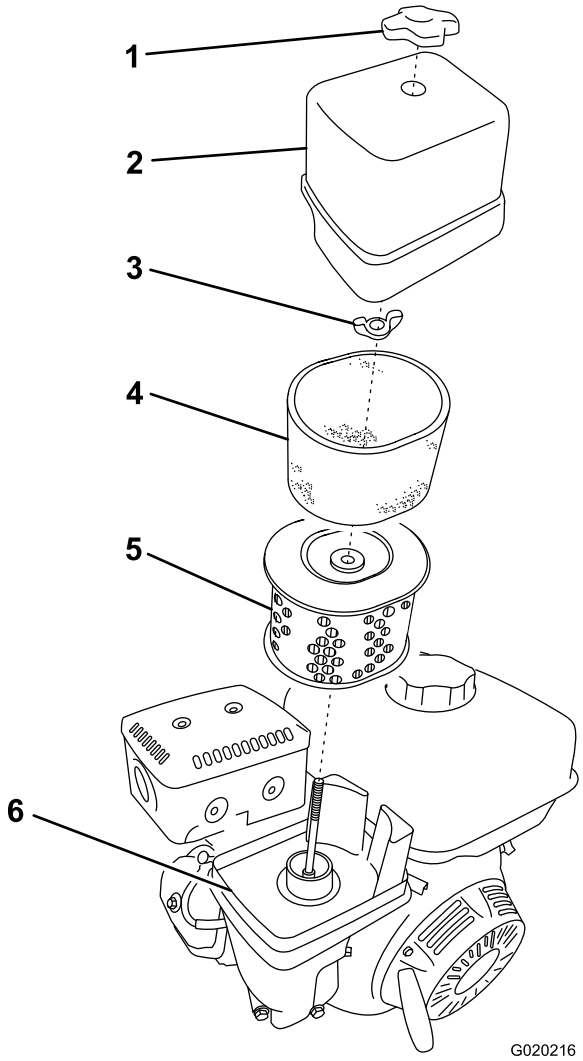

Figure 51

1. Cover nut
2. Cover
3. Wing nut
4. Foam element
5. Paper element
6. Base

4. Remove the cover.

   Note: Be careful to prevent dirt and debris from falling into the base.

5. Remove the foam and paper elements from the base (Figure 51).
6. Remove the foam element from the paper element (Figure 51).
7. Inspect the foam and paper elements, and replace them if they are damaged or excessively dirty.
8. If the paper element is excessively dirty, replace it.

   Note: Never try to brush dirt off the paper element; brushing forces the dirt into the fibers.

9. Clean the foam element in warm, soapy water or in a **nonflammable** solvent.

   Note: Do not use fuel to clean the foam element because it could create a risk of fire or explosion.

10. Rinse and dry the foam element thoroughly.
11. Dip the foam element in clean engine oil, then squeeze out the excess oil.

    Note: Excess oil in the foam element restricts the air flow through the element and may reach the paper filter and clog it.

12. Wipe dirt from the base and the cover with a moist rag.

    Note: Be careful to prevent dirt and debris from entering the air duct leading to the carburetor.

13. Install the air-cleaner elements and ensure that they are properly positioned.
14. Securely install the cover with the nut.

Changing the Engine Oil

Service Interval: After the first 25 hours

Every 100 hours

Toro Premium Engine Oil is available from your Authorized Toro Dealer.

Important: Use 4-cycle engine oil that meets or exceeds the requirements for API service category *SJ, SL, SM, or higher*.

Model(s)	Crankcase capacity
68012C, 68014C	0.58 L (0.61 US qt)
68016C, 68017C, 68020C, 68021C, 68024C	1.1 L (1.2 US qt)

Important: If the oil level in the crankcase is too low or too high and you run the engine, you may damage the engine. This type of damage is not covered by the warranty.

Note: Use SAE 10W-30 for general use. You can use the other viscosities shown in the chart when the average temperature in your area is within the indicated range (Figure 52).

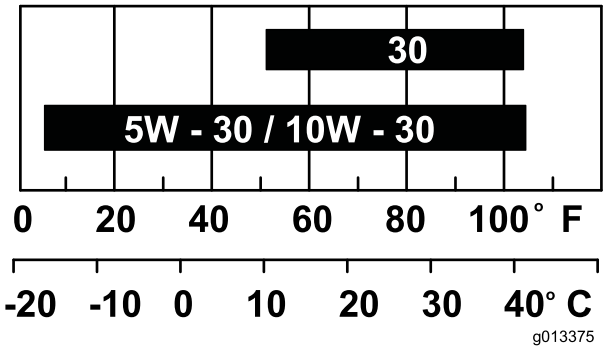

Figure 52

Draining the Engine Oil

⚠ WARNING

Oil may be hot after the engine has been run, and contact with hot oil can cause severe personal injury.

Avoid contacting the hot engine oil when you drain it.

1. Stop the engine and wait for all moving parts to stop.
2. Disconnect the wire from the spark plug; refer to Disconnecting the Spark-plug Wire (page 28).
3. Place a drain pan under the oil drain hole of the engine (Figure 53).

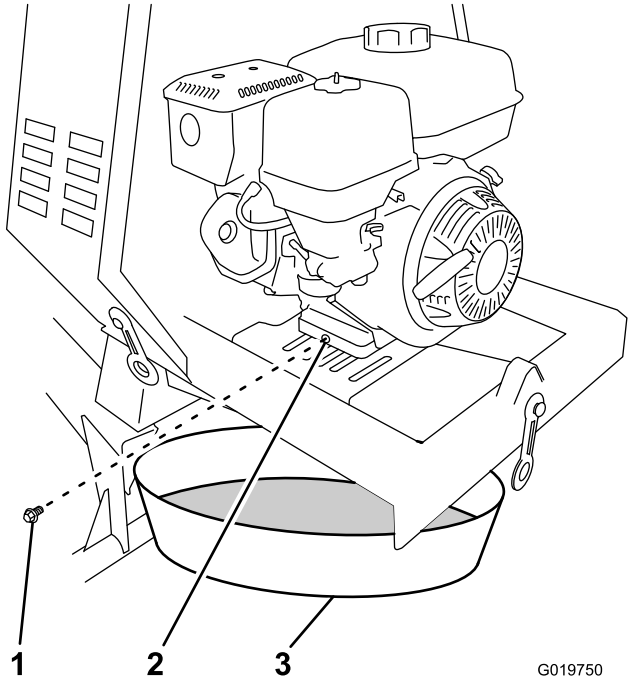

Figure 53

1. Oil drain plug
2. Oil drain hole
3. Oil drain pan

4. Remove the drain plug and catch the oil in the oil drain pan (Figure 53).
5. When the oil has drained completely, install the drain plug with a new washer (Figure 53).

   Note: Dispose of the used oil at a certified recycling center.

Filling the Engine Crankcase with Oil

1. Remove the dipstick (Figure 54) and slowly pour oil into the fill hole until the oil reaches the upper-limit mark (bottom edge of the oil-fill hole) on the dipstick.

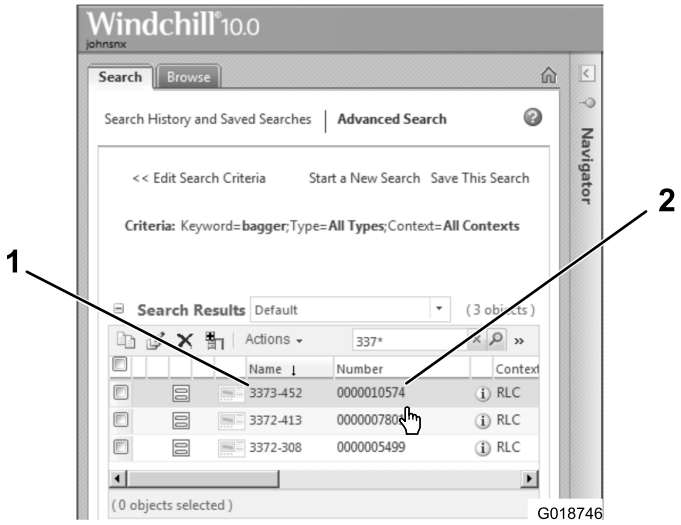

Figure 54

1. Oil fill hole
2. Dipstick
3. Oil-level upper limit
4. Oil-level lower limit

2. Replace and secure the dipstick.
3. Wipe up any spilled oil.

Servicing the Spark Plug

Service Interval: Every 100 hours/Every 6 months (whichever comes first)—Check the spark plug.

Every 300 hours/Yearly (whichever comes first)—Replace the spark plug.

Type: NGK BPR6ES or equivalent

Gap: 0.7 to 0.8 mm (0.028 to 0.031 inch)

Note: Use a 20 mm (13/16 inch) spark-plug wrench for removing and installing the spark plug.

Removing the Spark Plug

1. Park the machine on a level surface and turn off the engine; refer to Stopping the Engine (page 22).
2. Ensure that the machine surfaces are cool.
3. Pull the spark-plug wire off the terminal of the spark plug (Figure 55).

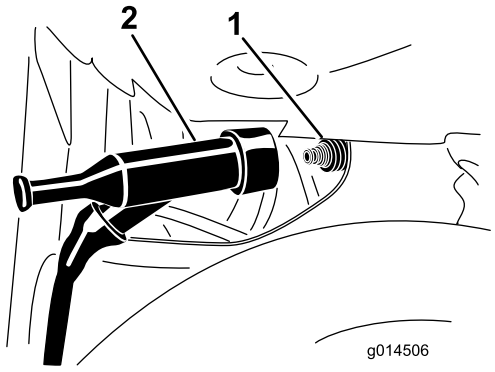

Figure 55

1. Spark plug
2. Wire

4. Clean around the spark plug.
5. Rotate the spark plug counterclockwise using a 20 mm (13/16 inch) spark-plug wrench to remove the plug and the sealing washer (Figure 56).

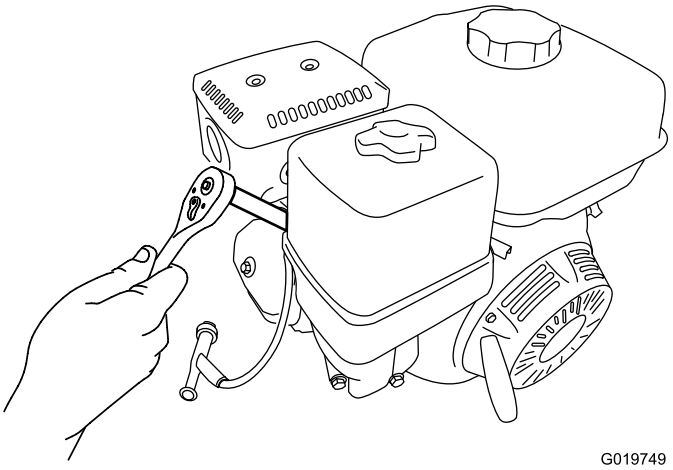

Figure 56

Checking the Spark Plug

Note: Use a gapping tool/feeler gauge to check and adjust the gap. Install a new spark plug if necessary.

1. Look at the center of the spark plug (Figure 57). If you see light brown or gray on the insulator, the engine is operating properly.

   Important: Never clean the spark plug. Always replace the spark plug when it has a black coating, worn electrodes, an oily film, or cracks.

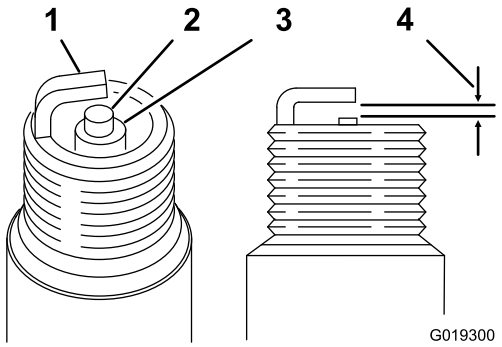

Figure 57

1. Side electrode
2. Center electrode
3. Insulator
4. 0.7 to 0.8 mm (0.028 to 0.031 inch) gap

2. Use a gapping tool for spark plugs or a feeler gauge to measure the gap between the side electrode and center electrode (Figure 57).
3. If the gap is not within the specified range, do the following:
   A. If the gap is **too small**, carefully bend the side electrode **away** from the center electrode until the gap between the electrodes is 0.7 to 0.8 mm (0.028 to 0.031 inch).
   B. If the gap is **too large**, carefully bend the side electrode **toward** the center electrode until the gap between the electrodes is 0.7 to 0.8 mm (0.028 to 0.031 inch).

Installing the Spark Plug

Important: Ensure that the gap between the side and center electrodes is correct before installing the spark plug.

1. Thread the spark plug clockwise into the spark-plug hole by hand.

   Note: Avoid cross-threading the spark plug with the threads of the spark-plug hole.
2. Rotate spark plug clockwise using a 20 mm (13/16 inch) spark-plug wrench until the plug and sealing washer are seated (Figure 56).
3. Tighten the spark plug as follows:
   - When installing an **in-service** spark plug, tighten the plug an additional 1/8 to 1/4 turn.
   - When installing a **new** spark plug, tighten the plug an additional 1/2 turn.
4. Push the spark-plug wire onto the terminal of the spark plug (Figure 55).

Servicing the Spark Arrester

Cleaning the Spark Arrester

Service Interval: Every 100 hours

Note: A spark arrester is available as an option. If you require a spark arrester, contact your Authorized Toro Service Dealer.

Genuine Toro spark arresters are approved by the USDA Forestry Service.

⚠ WARNING

If the engine has been running, the muffler will be hot.

1. Remove the divider plate; refer to Removing the Divider Plate (page 28).

   Note: Model 68024C does not have a divider plate.
2. Remove the 2 nuts (8 mm) and remove the muffler from the cylinder (Figure 58).

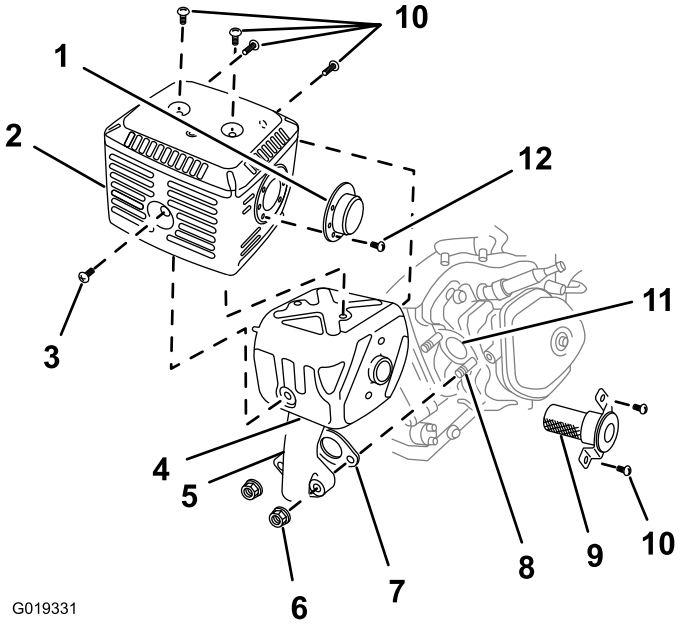

Figure 58

1. Deflector (if applicable)
2. Protector
3. Screw (6 mm)
4. Muffler
5. Exhaust pipe
6. Nut, 8 mm (2)
7. Gasket
8. Bolt (8 mm)
9. Spark arrester
10. Screws (5 mm)
11. Exhaust port
12. Screw (4 mm)

3. Remove the 3 screws (4 mm) from the exhaust deflector and remove the deflector (Figure 58).
4. Remove the screws (5 mm and 6 mm) from the muffler protector, and remove the muffler protector (Figure 58).
5. Remove the screw (4 mm) from the spark arrester and remove the spark arrester from the muffler (Figure 58).

6. Use a brush to carefully remove carbon deposits from the spark-arrester screen (Figure 59).

   Note: Replace the spark arrester if it has breaks or holes.

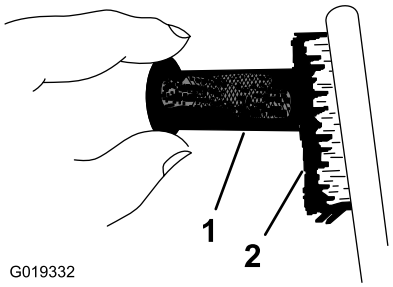

Figure 59

1. Screen
2. Brush

7. Install the spark arrester, muffler protector, exhaust deflector, and muffler in the reverse order of disassembly.
8. Install the divider plate; refer to Installing the Divider Plate (page 28).

Removing and Installing the Engine

Models 68013C, 68014C, 68016C, 68017C, 68020C, and 68021C only

Removing the Engine

⚠ WARNING

The spring is under tension when installed and can cause personal injury.

Be careful when removing the spring.

1. Park the machine on a level surface and stop the engine; refer to Stopping the Engine (page 22).
2. Ensure that the engine and the exhaust system surfaces are cool.
3. Remove the divider plate; refer to Removing and Installing the Divider Plate (page 28).
4. Remove the belt guide; refer to Removing the Belts (page 40).
5. Remove the belts; refer to Removing the Belts (page 40).
6. Using a spring-removal tool (Toro part 92-5771), remove the spring from the anchor bracket on the engine deck (Figure 60).

   Note: Leave the other end of the spring attached to the frame of the machine.

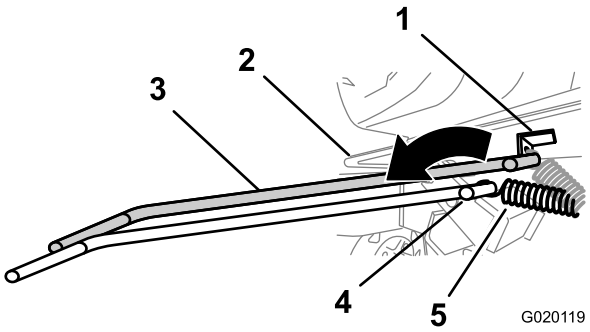

Figure 60

1. Anchor bracket
2. Engine deck
3. Spring-removal tool (Toro part 92-5771)
4. Spring-removal tool (spring removed)
5. Spring (spring removed)

7. Remove the bolt and nut that secure the rear bracket for the engine deck hinge to the frame of the machine (Figure 61).

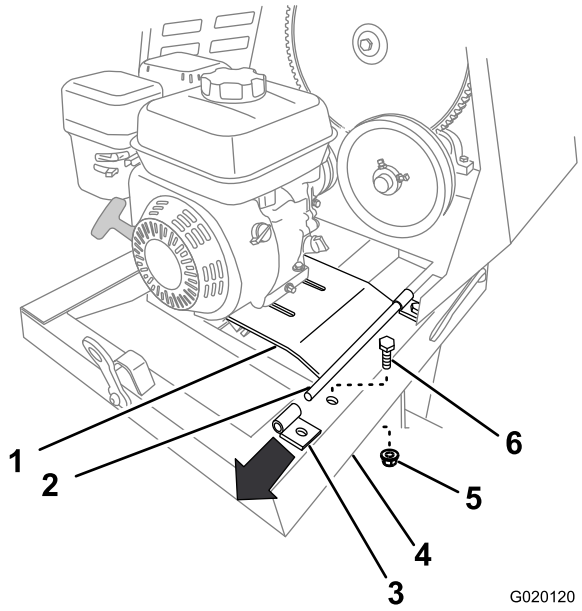

Figure 61

1. Engine deck
2. Pivot
3. Rear hinge bracket
4. Frame
5. Nut
6. Bolt

8. Lift up on the rear edge of the engine deck and remove the hinge bracket (Figure 61).
9. Slide the engine deck rearward and out from the forward hinge bracket (Figure 62).

   Note: Do not remove the forward hinge bracket.

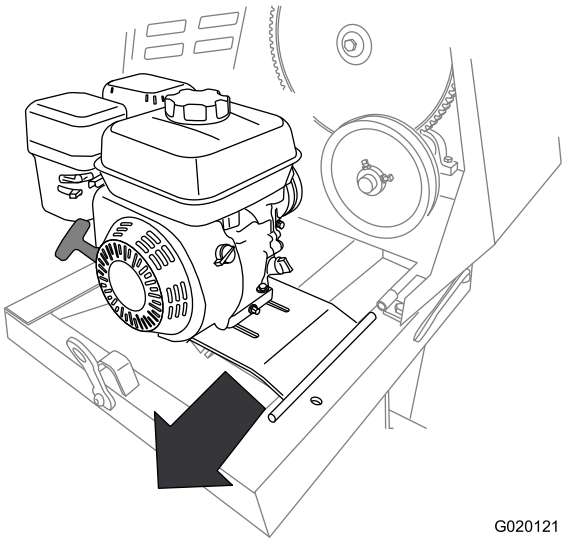

Figure 62

10. Remove the engine and engine deck from the machine (Figure 62).

Installing the Engine

1. Align the engine and engine deck to the rear frame of the machine.

   Note: The drive pulley on the engine must align forward.

2. Align the pivot on the engine deck with the forward hinge bracket (Figure 62).
3. Slide the engine deck forward and the pivot into the forward hinge bracket (Figure 62).
4. Align the rear hinge bracket with the pivot on the engine-deck hinge (Figure 62).
5. Lift up on the rear edge of the engine deck and slip the hinge bracket onto the pivot.
6. Secure the rear bracket to the frame of the machine using the bolt and nut (Figure 61) removed in step 7 of Removing the Engine (page 34).
7. Using a spring-removal tool, (Toro part 92-5771), install the tension spring to the anchor bracket on the engine deck (Figure 60).
8. Install the belts and belt guide; refer to Installing the Belts (page 41).
9. Adjust the belt guide; refer to Adjusting the Belt Guide (page 41).
10. Install the divider plate; refer to Removing and Installing the Divider Plate (page 28).

Fuel System Maintenance

Servicing the Fuel System

Cleaning the Sediment Cup

Service Interval: Every 100 hours/Every 6 months (whichever comes first)—Clean the sediment cup.

Yearly or before storage—Clean the fuel sediment cup.

Underneath the fuel valve is a sediment cup to catch dirt in the fuel.

1. Park the machine on a level surface and stop the engine; refer to Stopping the Engine (page 22).
2. Ensure that the engine and the exhaust system surfaces are cool.
3. Move the lever of the fuel valve to the Off position, all the way to the left (Figure 63).
4. Unscrew the sediment cup (Figure 63).
5. Remove the fuel filter and O-ring (Figure 63).

   Note: Do not misplace the O-ring.

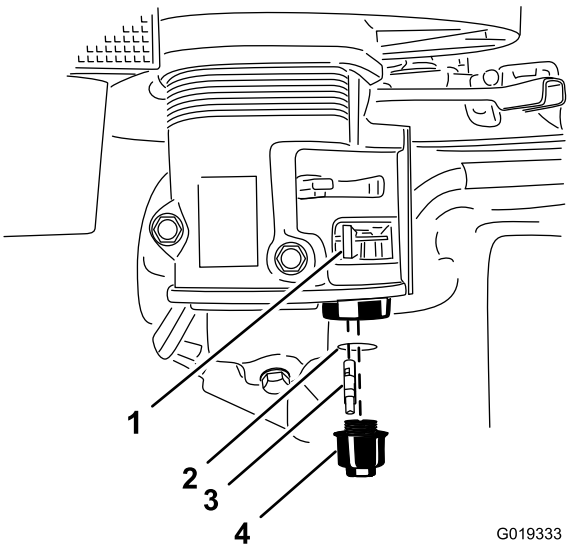

Figure 63

1. Fuel valve (Off)
2. O-ring
3. Fuel filter
4. Sediment cup

Note: Do not clean the O-ring in solvent.

6. Clean the fuel filter and sediment cup using a nonflammable solvent, and dry it carefully.
7. Wipe the O-ring with a clean, dry cloth.
8. Install the fuel filter in the bottom of the carburetor (Figure 63).
9. Align the O-ring in to the groove in the sediment cup and install the sediment cup to fuel valve housing.

10. Move the lever of the fuel valve to the On position (all the way to the right) and check for leaks. If it leaks, replace the O-ring.

Draining the Fuel Tank

1. Remove the engine; refer to Removing the Engine (page 34).
2. Remove the fuel cap by rotating it counterclockwise.

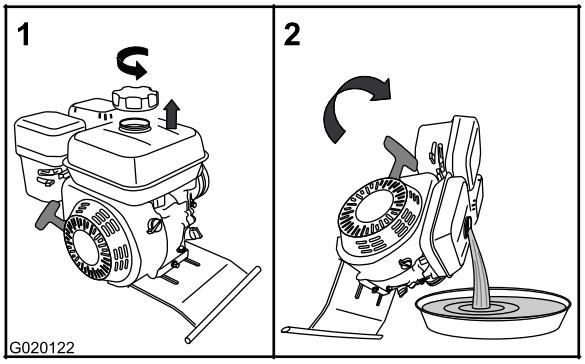

Figure 64

3. Align a drain pan to the hinge of the engine deck.
4. Rotate the engine on the hinge side of the engine deck and drain the fuel from the tank.
5. Carefully lower the engine and engine deck.
6. Install the fuel cap.
7. Install the engine; refer to Installing the Engine (page 35).

Drive System Maintenance

Servicing the Reduction Case—Belt-drive Models

Models 68013C and 68014C only

Important: Use 4-cycle motor oil that meets or exceeds the requirements for API service category *SJ or later* (or equivalent).

Important: If the oil level in the reduction case is too low or too high and you run the engine, you may damage the engine or the reduction case. This type of damage is not covered by the warranty.

Oil type: SAE 10W-30 motor oil

Reduction case capacity: 1.2 L (40 fl oz)

Checking the Reduction-Case Oil

Service Interval: Before each use or daily—Check the reduction-case oil **(Models 68013C and 68014C only).**

1. Remove the divider plate; refer to Removing the Divider Plate (page 28).
2. Locate the reduction case between the engine and the engine pulley (Figure 65).

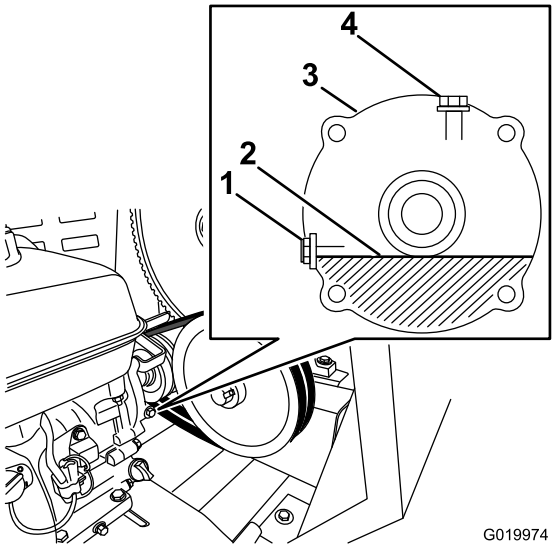

Figure 65

1. Oil-level-check bolt and washer
2. Oil level (normal)
3. Reduction case
4. Filler bolt and washer

3. Align a rag below the oil-level port in the side of the reduction case.
4. Remove the oil-level-check bolt and washer from the oil-level port (Figure 65).

- If the oil level is below the threads in the oil-level port, add oil as follows:
  A. Remove the filler bolt and washer from the filler port on the top of the reduction case (Figure 65).
  B. Slowly add the specified oil into the fill port until the oil level is level with the threads at the bottom of the oil-level port.
  C. Install the filler bolt and the washer to the filler port of the reduction case, and tighten the filler bolt (Figure 65).
- If the oil level is too high, allow the oil to flow out until it is flush with the threads at the bottom of the oil-level port.

5. When the oil is level is flush with the threads at the bottom of the oil-level port, install the oil-level-check bolt and the washer to the port and tighten the oil-level-check bolt (Figure 65).
6. Install the divider plate; refer to Installing the Divider Plate (page 28).

Changing the Reduction-Case Oil

Service Interval: After the first 20 hours—Change the reduction-case oil **(Models 68013C and 68014C only).**

Every 100 hours/Every 6 months (whichever comes first)—Change the reduction-case oil **(Models 68013C and 68014C only).**

1. Remove the engine; refer to Removing the Engine (page 34).
2. Drain the fuel tank; refer to Draining the Fuel Tank (page 36).
3. Remove the filler bolt and washer from the filler port on the top of the reduction case (Figure 66).

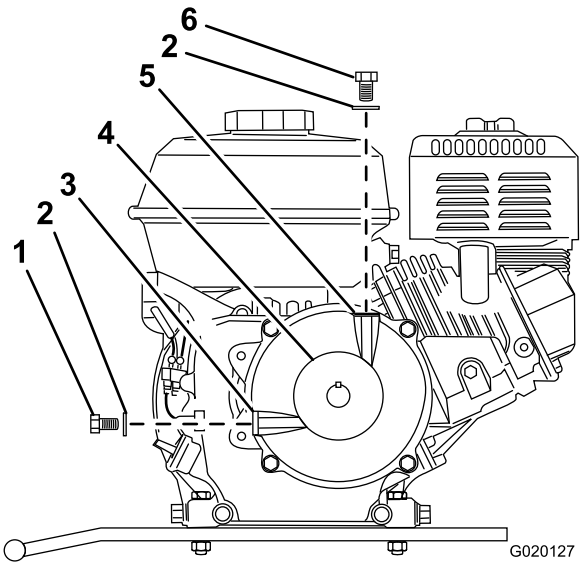

Figure 66

1.	Oil-level-check bolt	3.	Oil-level port	5.	Filler port
2.	Washer	4.	Pulley	6.	Filler bolt

4. Remove the oil-level-check bolt and washer from the oil-level port in the side of the reduction case (Figure 66).
5. Align a drain pan to the hinge of the engine deck (Figure 67).

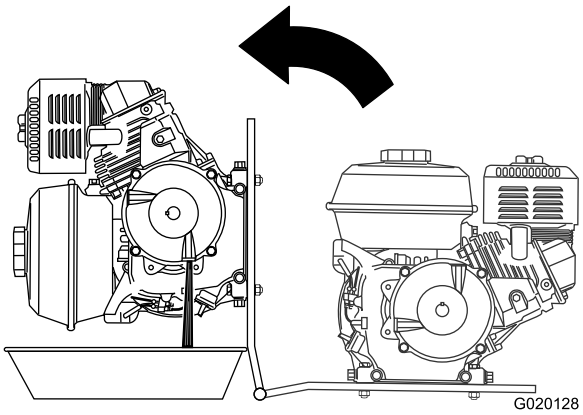

Figure 67

6. Rotate the engine on the hinge side of the engine deck, and drain the oil from the reduction case (Figure 67).
7. Carefully lower the engine and engine deck.
8. Slowly add the specified oil into the fill port until the oil level is level with the threads at the bottom of the oil-level port (Figure 65).
9. Install the oil-level-check bolt and washer to the oil-level port of the reduction case, and tighten the oil-level-check bolt (Figure 66).
10. Install the filler bolt and washer to the filler port of the reduction case, and tighten the filler bolt (Figure 66).

11. Install the engine; refer to Installing the Engine (page 35).

Servicing the Gear Case—Gear-Case Model

Model 68024C only

Checking the Clutch Operation

Service Interval: Before each use or daily—Check the clutch operation **(Model 68024C only).**

1. Move the clutch lever to the Off position; refer to Controlling the Paddles (page 22).
2. Start the engine; refer to Starting the Engine (page 21).
3. Ensure that the engine throttle is set to the 2/3 position.
4. If the paddles rotate with the clutch lever to the Off position do the following:
   A. Stop the engine; refer to Stopping the Engine (page 22).
   B. Check the clutch lever force; refer to Checking the Clutch Lever (page 38).

Checking the Clutch Lever

Service Interval: After the first 25 hours—Check the gear-case clutch **(Model 68024C only).**

Important: Check the gear case clutch if the paddles rotate when the clutch lever is in the Off position, if the paddles rotate slowly, or if the clutch begins to slip.

1. Ensure that the engine is Off; refer to Stopping the Engine (page 22).
2. Locate the clutch lever at the back of the machine; refer to Clutch Lever (page 11).
3. Move the clutch lever to the Off position; refer to Controlling the Paddles (page 22).
4. Attach a spring scale with a range of 15 to 30 kg (35 to 55 lb) to the grip of the clutch lever (Figure 68).

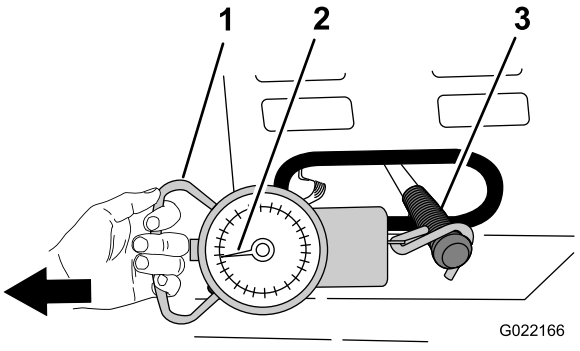

Figure 68

1. Spring scale
2. 15 to 30 kg (35 to 55 lb)
3. Clutch lever

5. Using the spring scale, pull the clutch handle to the On position as shown in Figure 68.
6. Observe the spring scale while pulling to see what the highest pressure is when moving the clutch handle from the Off position to the On position (Figure 68).

   Note: Normal clutch pressure is 15 to 30 kg (35 to 55 lb).
7. If the clutch pressure is **greater than** or **less than** 15 to 30 kg (35 to 55 lb), contact an Authorized Toro Service Dealer.

Checking the Gear-case Oil

Service Interval: Every 40 hours—Check the gear-case oil **(Model 68024C only).**

Important: If the oil level in the gear case is too low or too high and you run the engine, you may damage the engine or the gear case. This type of damage is not covered by the warranty.

Oil Type: SAE 90 gear oil

Gear-case Capacity: 2.13 L (72 fl oz)

1. Locate the gear case between the engine and the front cowl.
2. At the right side of the gear case, examine the oil level in the sight glass (Figure 69).

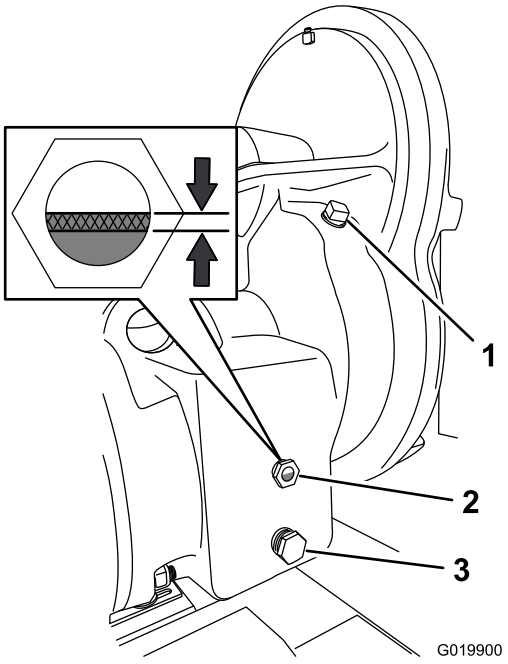

Figure 69

1. Fill plug
2. Sight glass
3. Drain plug

3. If the oil level is below the bottom 1/3 of the sight glass, add oil as follows:
   A. Remove the fill plug from the fill port in the housing of the gear case (Figure 69).

B. Slowly add the specified oil into the fill port until the oil level is between 1/3 and 1/2 of the sight glass (Figure 69).

C. Clean the fill plug.

D. Apply PTFE thread-sealing tape to the threads of the plug.

E. Install the plug into the fill port in the housing (Figure 69).

Replacing the Gear-case Oil

Service Interval: Every 800 hours—Replace the gear-case oil **(Model 68024C only).**

1. Align a drain pan with a 3-quart capacity under the drain plug (Figure 69).
2. Remove the drain plug from the drain port, and completely drain the gear-case oil (Figure 69).
3. Remove the fill plug (Figure 69).
4. Clean the drain and fill plugs, and apply PTFE thread-sealing tape to the plug threads.
5. Install the drain plug in the drain port (Figure 69).
6. Slowly add the specified oil into the fill port until the oil level is between 1/3 and 1/2 of the sight glass (Figure 69).
7. Install the fill plug in the fill port (Figure 69).

Belt Maintenance

Servicing the Belts—Belt-drive Models

Models 68013C, 68014C, 68016C, 68017C, 68020C, and 68021C only

Inspecting the Belts

Service Interval: After the first 25 hours—Inspect the belts and adjust as necessary.

Every 40 hours—Inspect the belts and adjust as necessary.

1. Remove the divider plate; refer to Removing the Divider Plate (page 28).
2. Move the clutch lever to the Off position; refer to Controlling the Paddles (page 22).
3. Examine the belts for wear or damage. If the belts are worn or damaged, replace them; refer to Replacing the Belts—Belt-drive Models (page 40).
4. Examine the pulleys for wear, damage, and misalignment; refer to Aligning the Pulleys—Belt-drive Models (page 42).
5. Install the divider plate; refer to Installing the Divider Plate (page 28).

Adjusting the Belt Tension

Clutch air gap: 6.35 to 9.52 mm (1/4 to 3/8 inch)

1. Move the clutch lever to the On position; refer to Controlling the Paddles (page 22).
2. Measure the air gap between the engine deck and the roller on the clutch (Figure 70).

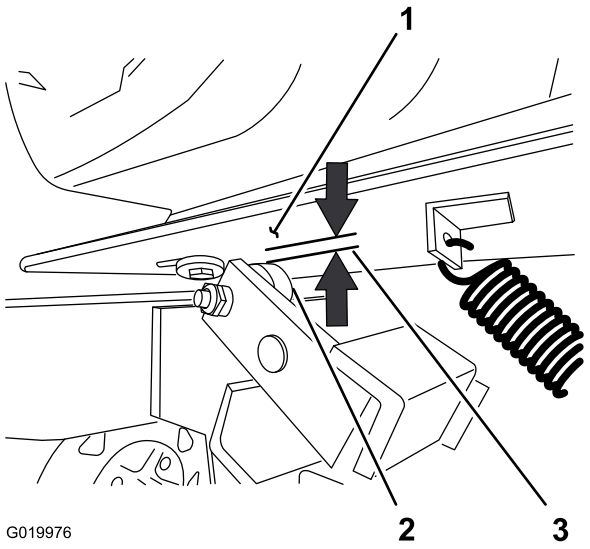

Figure 70

1. Engine deck
2. Clutch roller
3. Clutch air gap: 6.35 to 9.52 mm (1/4 to 3/8 inch)

3. If the measured air gap is not within the specified range, adjust the gap as follows:
   A. Move the clutch lever to the Off position; refer to Controlling the Paddles (page 22).
   B. Loosen the nuts and bolts that secure the engine to the engine deck (Figure 71).

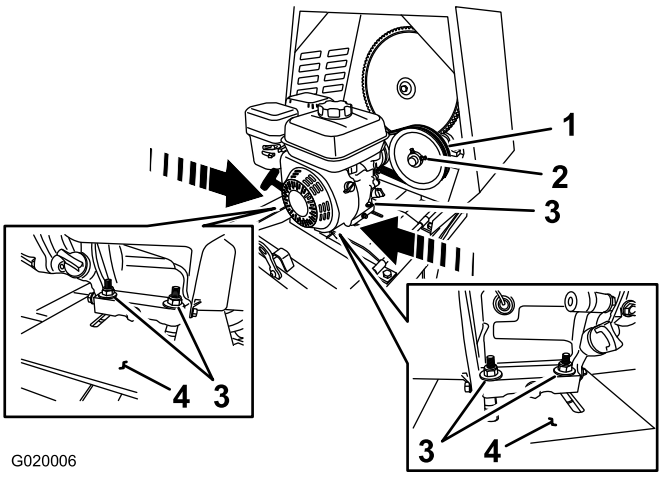

Figure 71

1. Idler pulley
2. Setscrew
3. Nut and bolt
4. Engine deck

   C. Move the engine position as follows:
      - **Increase the air gap**—move the engine **away** from the idler pulley (Figure 71).
      - **Decrease the air gap**—move the engine **toward** the idler pulley (Figure 71).
   D. Align a straightedge across the engine pulley and the idler pulley (Figure 72).

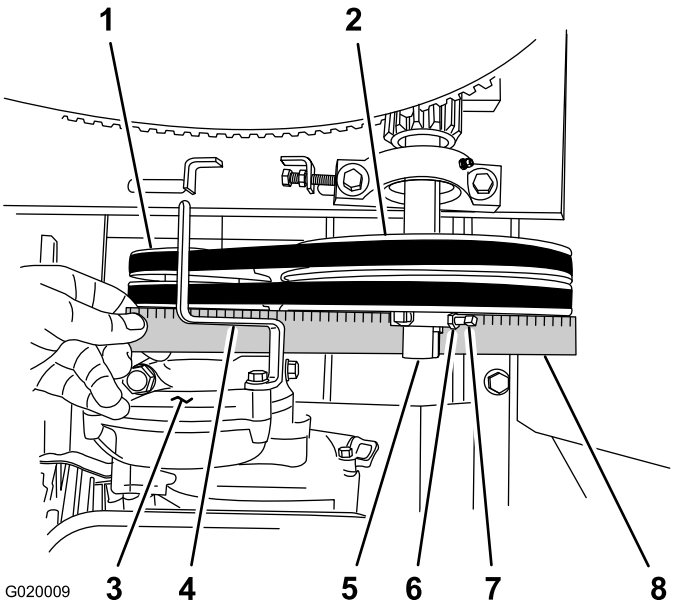

Figure 72

1. Engine pulley
2. Idler pulley
3. Reduction case (engine)
4. Belt guide
5. Idler shaft
6. Jam nut
7. Setscrew
8. Straightedge

   E. If needed, pivot the engine on the engine deck until the engine pulley and the idler pulley are aligned to the straightedge (Figure 72).
   F. Tighten the nuts and bolts that secure the engine to the engine deck to a torque of 18 N-m (13 ft-lb).
   G. Check the air gap between the engine deck and the roller on the clutch. If the air gap is not within the specified range, repeat step 3 until the air gap measurement is within the specified range.
   H. Install the divider plate; refer to Installing the Divider Plate (page 28).

Replacing the Belts—Belt-drive Models

Service Interval: Every 2 years—Replace the belts.

Models 68013C, 68014C, 68016C, 68017C, 68020C, and 68021C only

Removing the Belts

1. Move the clutch lever to the Off position; refer to Controlling the Paddles (page 22).
2. Remove the divider plate; refer to Removing the Divider Plate (page 28).
3. Remove the bolt that secures the belt guide to the engine, and remove the belt guide (Figure 73).

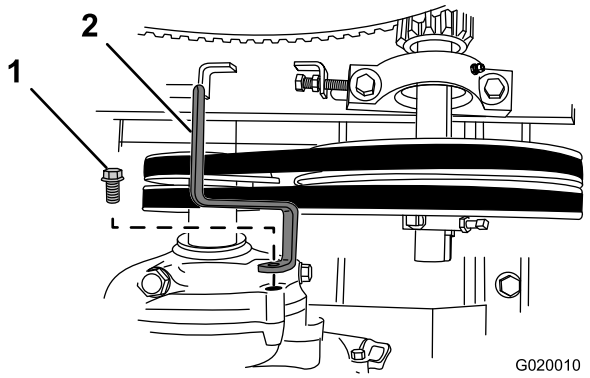

Figure 73

1. Bolt
2. Belt guide

4. Slip the forward belt forward and off the idler pulley (Figure 74).

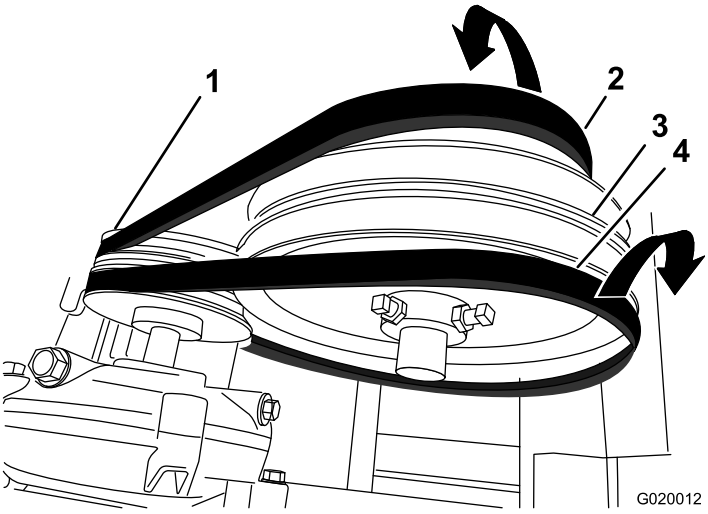

Figure 74

1. Engine pulley
2. Forward belt
3. Idler pulley
4. Rear belt

5. Slip the rear belt rearward and off the idler pulley (Figure 74).
6. Slip the belts off the engine pulley.
7. Remove the belts from the machine.

Installing the Belts

1. Ensure that the clutch lever is in the Off position; refer to Controlling the Paddles (page 22).
2. Align the rear belt to the rear groove in the engine pulley.

   Note: Do not align the rear belt to the idler pulley.
3. Align the forward belt to the forward groove of the idler pulley.
4. Slip the rear belt over the idler pulley and align the belt to the rear pulley groove.
5. Slip the forward belt over the engine pulley and align the belt to the forward pulley groove.
6. Check the belt tension; refer to step 1, step 2, and step 3 in Adjusting the Belt Tension (page 39).
7. Loosely secure the belt guide to the engine (Figure 73) with the bolt that was removed in step 3 of Removing the Belts (page 40).
8. Adjust the belt guide; refer to Adjusting the Belt Guide (page 41).
9. Install the divider plate; refer to Installing the Divider Plate (page 28).

Adjusting the Belt Guide

Note: To access the belt guide, remove the divider plate; refer to Removing the Divider Plate (page 28).

Guide air gap: 2.5 to 4.0 mm (3/32 to 5/32 inch)

1. Ensure that the clutch lever is in the On position; refer to Controlling the Paddles (page 22).
2. Ensure that the belt tension is correct; refer to Adjusting the Belt Tension (page 39).
3. Check that the air gap between the belt guide and the belts is 2.5 to 4.0 mm (3/32 to 5/32 inch); refer to Figure 75.

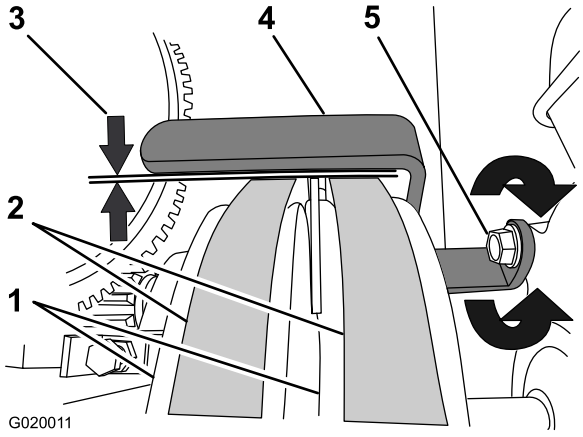

Figure 75

1. Engine pulleys
2. Belts
3. Guide air gap: 2.5 to 4.0 mm (3/32 to 5/32 inch)
4. Belt guide
5. Bolt

4. If the air gap is not within the specified range, do the following:
   A. Loosen the bolt that secures the belt guide to the engine (Figure 75).

      Important: Ensure that the belt guide is toward the engine pulley.

   B. Rotate the belt guide up or down until there is an air gap of 2.5 to 4.0 mm (3/32 to 5/32 inch) between the guide and each belt (Figure 75).

Important: The belt guide should not contact the belts with the clutch lever in the On position.

Note: If the air gap between the belt guide and both belts cannot be attained, then one of the belts is too long.

C. Tighten the bolt that secures the belt guide to the engine (Figure 75).

D. Check the clutch operation; refer to Checking the Clutch Operation (page 42).

5. Install the divider plate; refer to Installing the Divider Plate (page 28).

Checking the Clutch Operation

Service Interval: Every 40 hours—Check the clutch operation **(Models 68013C, 68014C, 68016C, 68017C, 68020C, and 68021C only).**

Important: The paddles must not rotate in an empty drum when the clutch lever is in the Off position.

1. Move the clutch lever to the Off position; refer to Clutch Lever (page 11).
2. Start the engine; refer to Starting the Engine (page 21).
3. If the paddles rotate with the clutch lever to the Off position do the following:

   A. Stop the engine; refer to Stopping the Engine (page 22).

   B. Check the air gap between the belt guide and the belts.

   Note: If the air gap is larger than 4.0 mm (0.16 inch), decrease the gap between the belt guide and the belts; refer to Adjusting the Belt Guide (page 41).

4. Repeat steps 1, 2, and 3 until all the following conditions are met:

   - The engine is run at 2/3 throttle.
   - The clutch lever is in the Off position.
   - The paddles do not rotate in an empty drum.

Aligning the Pulleys—Belt-drive Models

Models 68013C, 68014C, 68016C, 68017C, 68020C, and 68021C only

1. Remove the divider plate; refer to Removing the Divider Plate (page 28).
2. Place a straightedge across the face of the engine pulley and the idler pulley (Figure 76).

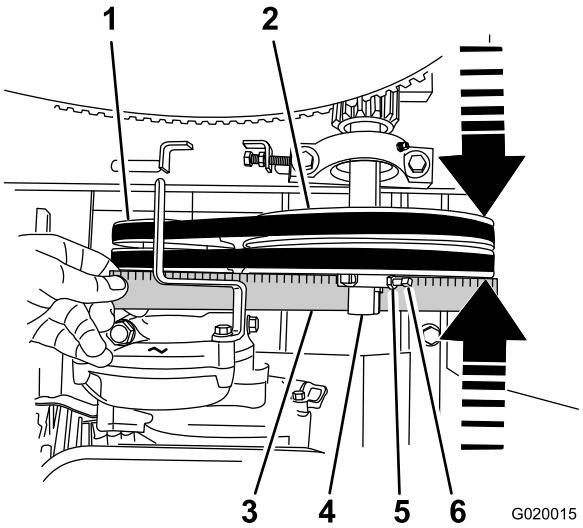

Figure 76

1. Engine pulley
2. Idler pulley
3. Straightedge
4. Idler shaft
5. Locknut
6. Setscrew

Note: Both pulleys must be aligned flush with the straightedge.

3. If the pulleys are not aligned do the following:

   A. Move the clutch lever to the Off position.

   B. Loosen the locknuts and setscrews that secure the idler pulley to the idler shaft (Figure 76).

   C. Using a soft-face mallet, tap the idler pulley forward or backward along the idler shaft until the engine pulley and the idler pulley are aligned to the straight edge (Figure 76).

   D. Tighten the setscrews and locknuts that secure the idler pulley to the idler shaft (Figure 76).

4. Install the divider plate; refer to Installing the Divider Plate (page 28).

Replacing the Light Bulbs

Replacing the Rear-facing Bulbs

Note: The left rear-facing bulb also illuminates license plate.

1. Use a screwdriver to remove the 4 screws from the large square lens on the light (Figure 77).

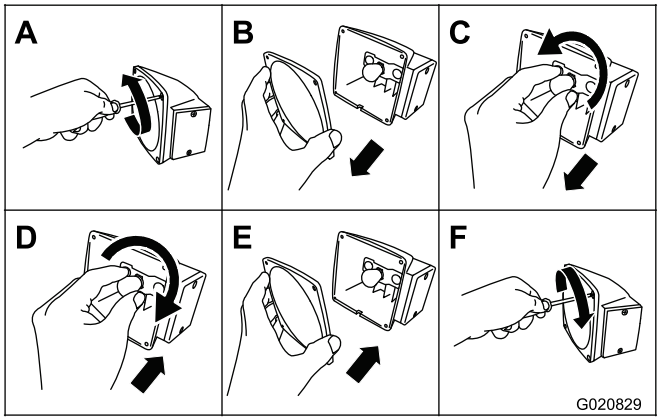

Figure 77

2. Remove the lens (Figure 77).
3. Push and twist the bulb counterclockwise to remove it from the socket (Figure 77).
4. Push a new 1157 bulb into the socket and then twist it clockwise (Figure 77).
5. Install the lens and the 4 screws (Figure 77).

Replacing the Side-facing Bulbs

1. Use a screwdriver to remove the 2 screws from the small rectangular lens on the side of the light (Figure 78).

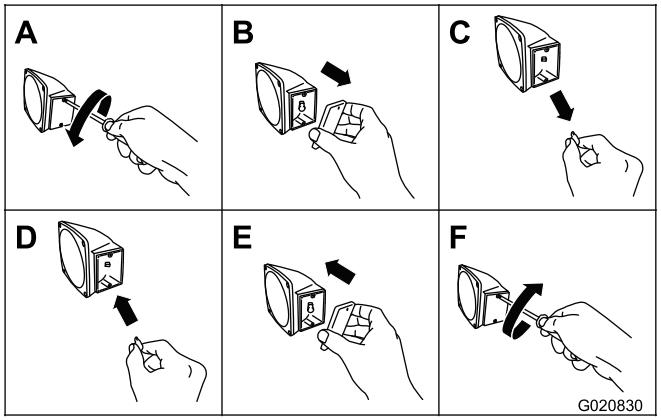

Figure 78

2. Remove the lens (Figure 78).
3. Pull the bulb out of the socket (Figure 78).
4. Push a new 168 bulb into the socket (Figure 78).
5. Install the lens and the 2 screws (Figure 78).

Cleaning

Cleaning the Machine

Regular cleaning and washing will increase the life span of the machine. Clean the machine after each use, before the dirt hardens.

Ensure that the fuel tank cap and oil cap/dipstick are secure to avoid getting water in the tank.

Use care when using a high-pressure sprayer because it can damage warning decals, instruction signs, and the engine.

Important: Lubricate the trunnions after cleaning; refer to Lubricating the Bearings and Seals (page 29).

Storage

Storing the Machine

For storage over 30 days, prepare the machine as follows:

1. Remove dirt and grime from the external parts of the entire machine, especially the engine. Clean dirt and debris from the outside of the engine cylinder-head fins and blower housing.

   Important: You can wash the machine with mild detergent and water.

2. Condition the fuel system as follows:

   A. Add a petroleum-based stabilizer/conditioner to fuel in the tank. Follow the mixing instructions from the stabilizer manufacturer. **Do not** use an alcohol-based stabilizer (ethanol or methanol).

   Important: Do not store stabilizer/conditioned fuel over 90 days.

   Note: Fuel stabilizer/conditioner is most effective when mixed with fresh fuel and used at all times.

   B. Run the engine for 5 minutes to distribute the conditioned fuel through the fuel system.

   C. Stop the engine, allow it to cool, and drain the fuel tank using a pump-type siphon. Dispose of fuel properly; recycle it according to local codes.

   D. Start the engine and run it until it stops.

   E. Choke the engine.

   F. Start and run the engine until it will not start again.

3. Clean the sediment cup; refer to Cleaning the Sediment Cup (page 35).
4. Service the air cleaner; refer to Servicing the Air Cleaner (page 30).
5. Change the engine crankcase oil; refer to Changing the Engine Oil (page 30).
6. Remove the spark plug and check the condition; refer to Removing the Spark Plug (page 32).
7. Condition the engine as follows:

   A. Remove the spark plug and pour 2 tablespoons of engine oil into the spark-plug hole; refer to Removing the Spark Plug (page 32).

   B. Pull the recoil-start handle slowly to crank the engine and distribute the oil inside the cylinder.

   C. Install the spark plug; refer to Servicing the Spark Plug (page 32).

   Note: Do not install the wire on the spark plug.

8. Grease the machine; refer to Lubricating the Bearings and Seals (page 29).
9. Check and tighten all bolts, nuts, and screws. Repair or replace any part that is damaged.

10. Paint all scratched or bare metal surfaces. Paint is available from your Authorized Toro Dealer.
11. Store the machine in a clean, dry garage or storage area.
12. Cover the machine to protect it and keep it clean.

Troubleshooting

Problem	Possible Cause	Corrective Action
The engine will not start.	1. The fuel-valve lever is in the Off position. 2. The choke is closed 3. The choke is open. 4. The engine On/Off switch is in the Off position. 5. The engine oil level is low (engines with the oil-level switch). 6. The fuel tank is empty. 7. The engine contains bad/old fuel. 8. The spark plug is fouled or improperly gapped. 9. The spark plug is wet with fuel (flooded engine). 10. The spark-plug wire is loose or disconnected.	1. Move the fuel-valve lever to the On position. 2. Open the choke when starting a hot engine. 3. Close the choke when starting a cold engine. 4. Rotate the switch to the On position. 5. Fill the engine, with the recommended oil, to the proper level. 6. Fill the fuel tank with fresh fuel. 7. Drain the fuel tank and carburetor. Refuel with fresh gasoline. 8. Gap or replace the spark plug. 9. Remove the spark plug, dry it, and install the plug. Start the engine with the throttle in the Max position. 10. Remove the spark-plug wire, clean the spark-plug terminal and the terminal socket in the boot of the spark-plug wire, and reinstall the spark-plug wire.
The engine lacks power or runs rough.	1. The air filter is restricted. 2. The engine contains bad/old fuel. 3. There is water or contamination in the fuel. 4. The fuel line is restricted. 5. The choke is closed 6. The spark plug is worn or has buildup on the electrodes. 7. There is too much oil in the engine crankcase.	1. Clean or replace the air filter element(s). 2. Drain the fuel tank and carburetor. Refuel with fresh gasoline. 3. Drain the fuel tank and carburetor. Refuel with fresh gasoline. 4. Clean the fuel filter and sediment cup. 5. Open the choke. 6. Check the electrode gap and adjust or replace the spark plug. 7. Drain the oil to the proper level.
The belts slip or come off the pulleys (Models 68013C, 68014C, 68016C, 68017C, 68020C, and 68021C).	1. The belt tension is insufficient. 2. The belts are worn. 3. The pulley(s) are worn. 4. The pulley(s) are misaligned.	1. Adjust the belt tension. 2. Replace the belts. 3. Contact your Authorized Service Dealer. 4. Align the pulley(s).
The paddles rotate when the clutch lever is in the Off position (Models 68013C, 68014C, 68016C, 68017C, 68020C, and 68021C).	1. The clutch lever is not adjusted correctly. 2. The belt guide is not adjusted correctly.	1. Adjust the belt tension. 2. Adjust the belt guide.
The paddles rotate when the clutch lever is in the Off position (Model 68024C).	1. The clutch is not adjusted correctly.	1. Contact your Authorized Service Dealer.
The paddles do not rotate when the clutch lever is in the On position (Models 68013C, 68014C, 68016C, 68017C, 68020C, and 68021C).	1. The clutch lever is not adjusted correctly. 2. The paddles are stuck in the drum	1. Adjust the belt tension. 2. Clean the paddles and drum.
The paddles do not rotate when the clutch lever is in the On position (Model 68024C).	1. The clutch is not adjusted correctly.	1. Contact your Authorized Service Dealer.

Problem	Possible Cause	Corrective Action
The paddles rotate slowly when the clutch lever is in the On position (Models 68013C, 68014C, 68016C, 68017C, 68020C, and 68021C).	1. The clutch lever is not adjusted correctly.	1. Adjust the belt tension.
The paddles rotate slowly when the clutch lever is in the On position (Model 68024C).	1. The clutch is not adjusted correctly.	1. Contact your Authorized Service Dealer.

The Toro Warranty

A limited warranty (see warranty periods below)

Concrete, Masonry, and Compaction Equipment

Conditions and Products Covered

The Toro Company and its affiliate, Toro Warranty Company, pursuant to an agreement between them, jointly warrant your Toro Concrete, Masonry, and Compaction Equipment Products listed below to be free from defects in materials or workmanship.

This warranty covers the cost of parts and labor, but you must pay transportation costs.

The following time periods apply from the date of purchase:

Products	Warranty Period
Concrete Mixers	1 year
・Spindle Bearings	Lifetime* (original owner only)
Mortar Mixers	1 year
・Drum Bearings and Seals	Lifetime* (original owner only)
Forward Plate Compactors	2 years
Reversible Plates	1 year
Rammer Compactors	2 years
Mud Buggy	1 year
Vibrating Trench Roller	2 years
Concrete Saws	1 year
Masonry Saws	1 year
Power Trowels	1 year
Screeds	1 year
Concrete Vibrators	1 year

Where a warrantable condition exists, we will repair the Product at no cost to you including diagnosis, labor, and parts.

*Lifetime Warranty - If the bearing(s) or seal(s) on your mixer fail, it will be replaced under warranty, at no cost for parts or labor.

Instructions for Obtaining Warranty Service

If you think that your Toro Product contains a defect in materials or workmanship, follow this procedure**:

1. Contact any Authorized Servicing Outlet to arrange service at their dealership. To locate one convenient to you, access our website at www.Toro.com. Select “Where to Buy” and select “Contractor” under product type. You may also call our toll free number below.
2. Bring the product and your proof of purchase (sales receipt) to them.
3. If for any reason you are dissatisfied with the Service Outlet’s analysis or with the assistance provided, contact us at:

   SWS Customer Care Department
   Toro Warranty Company
   8111 Lyndale Avenue South
   Bloomington, MN 55420-1196
   Toll Free: 800-888-9926

**Toro Authorized Rental Customers who have purchased products directly from Toro and have signed the Toro Rental Customer Agreement have the ability to perform their own warranty work. Please visit Toro’s Rental Portal for electronic warranty clam filing procedures or call the toll free number above.

Owner Responsibilities

You must maintain your Toro Product by following the maintenance procedures described in the *Operator’s Manual*. Such routine maintenance, whether performed by a dealer or by you, is at your expense. Parts scheduled for replacement as required maintenance (“Maintenance Parts”), are warranted for the period of time up to the scheduled replacement time for that part. Failure to perform required maintenance and adjustments can be grounds for disallowing a warranty claim.

Items and Conditions Not Covered

Not all product failures or malfunctions that occur during the warranty period are defects in materials or workmanship. This express warranty does not cover the following:

- Product failures which result from the use of non-Toro replacement parts, or from installation and use of add-on, modified, or unapproved accessories
- Product failures which result from failure to perform required maintenance and/or adjustments
- Product failures which result from operating the Product in an abusive, negligent or reckless manner
- Parts subject to consumption through use unless found to be defective. Examples of parts which are consumed, or used up, during normal product operation include, but are not limited to, belts, wipers, spark plugs, tires, filters, gaskets, wear plates, seals, O-rings, drive chains, clutches.
- Failures caused by outside influence. Items considered to be outside influence include, but are not limited to, weather, storage practices, contamination, use of unapproved coolants, lubricants, additives, or chemicals, etc.
- Normal “wear and tear” items. Normal “wear and tear” includes, but is not limited to, worn painted surfaces, scratched decals, etc.
- Any component covered by a separate manufacturer’s warranty
- Pickup and delivery charges

General Conditions

Repair by an Authorized Servicing Outlet or Self-Service as an Authorized Rental Customer is your sole remedy under the warranty.

Neither The Toro Company nor Toro Warranty Company is liable for indirect, incidental or consequential damages in connection with the use of the Toro Products covered by this warranty, including any cost or expense of providing substitute equipment or service during reasonable periods of malfunction or non-use pending completion of repairs under this warranty. All implied warranties of merchantability and fitness for use are limited to the duration of this express warranty. Some states do not allow exclusions of incidental or consequential damages, or limitations on how long an implied warranty lasts, so the above exclusions and limitations may not apply to you.

This warranty gives you specific legal rights, and you may also have other rights which vary from state to state.

Except for the engine warranty coverage and the Emissions warranty referenced below, if applicable, there is no other express warranty. The Emissions Control System on your Product may be covered by a separate warranty meeting requirements established by the U.S. Environmental Protection Agency (EPA) or the California Air Resources Board (CARB). Refer to the California Emission Control Warranty Statement supplied with your Product or contained in the engine manufacturer’s documentation for details.

Countries Other than the United States or Canada

Customers who have purchased Toro products outside the United States or Canada should contact their Toro Distributor (Dealer) to obtain guarantee policies for your country, province, or state. If for any reason you are dissatisfied with your Distributor's service or have difficulty obtaining guarantee information, contact the Toro importer. If all other remedies fail, you may contact us at Toro Warranty Company.

Australian Consumer Law: Australian customers will find details relating to the Australian Consumer Law either inside the box or at your local Toro Dealer.