Form No. 3378-148 Rev B

TORO®

Count on it.

Operator's Manual

CM-658H-S, CM-958H-S, CM-958H-SED, CM-958H-PED, and CM-958H-P Concrete Mixers

Model No. 68004—Serial No. 313000001 and Up
Model No. 68006—Serial No. 313000001 and Up
Model No. 68007—Serial No. 313000001 and Up
Model No. 68008—Serial No. 313000001 and Up
Model No. 68009—Serial No. 313000001 and Up

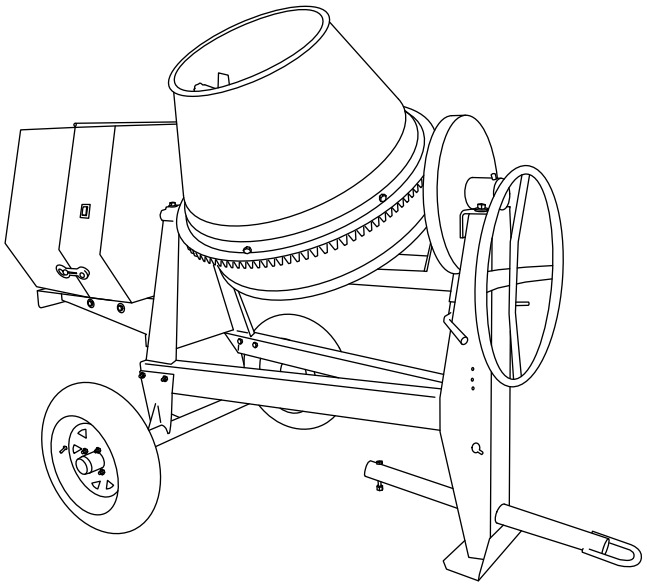

G019544

Register at www.Toro.com.
Original Instructions (EN)

3378-148 B

⚠ WARNING

CALIFORNIA
Proposition 65 Warning

This product contains a chemical or chemicals known to the State of California to cause cancer, birth defects, or reproductive harm.

The engine exhaust from this product contains chemicals known to the State of California to cause cancer, birth defects, or other reproductive harm.

Use of this product may cause exposure to chemicals known to the State of California to cause cancer, birth defects, or other reproductive harm.

This spark ignition system complies with Canadian ICES-002.

Because in some areas there are local, state, or federal regulations requiring that a spark arrester be used on the engine of this machine, a spark arrester is available as an option. If you require a spark arrester, contact your Authorized Toro Service Dealer.

Genuine Toro spark arresters are approved by the USDA Forestry Service.

Important: It is a violation of California Public Resource Code Section 4442 to use or operate the engine on any forest-covered, brush-covered, or grass-covered land without a spark arrester muffler maintained in working order, or the engine constricted, equipped, and maintained for the prevention of fire. Other states or federal areas may have similar laws.

The enclosed *Engine Owner's Manual* is supplied for information regarding the US Environmental Protection Agency (EPA) and the California Emission Control Regulation of emission systems, maintenance, and warranty. Replacements may be ordered through the engine manufacturer.

Introduction

This machine is designed to mix concrete, plaster, fireproofing material, grout, and other small-grained concrete products. The machine can be towed behind a vehicle equipped with a hitch appropriate for the type of tow pole your machine has (ball, pintle, or pin hitch).

Read this information carefully to learn how to operate and maintain your product properly and to avoid injury and product damage. You are responsible for operating the product properly and safely.

You may contact Toro directly at www.Toro.com for product and accessory information, help finding a dealer, or to register your product.

Whenever you need service, genuine Toro parts, or additional information, contact an Authorized Service Dealer or Toro Customer Service and have the model and serial numbers of your product ready. Write the numbers in the space provided.

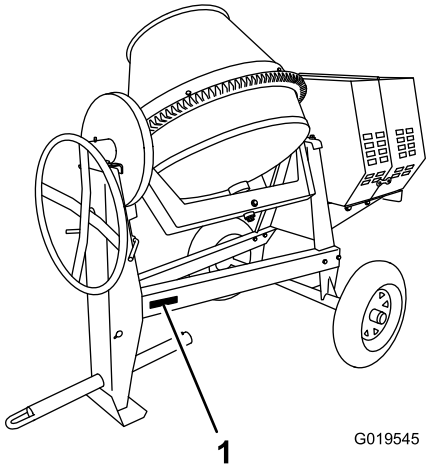

Figure 1
Models 68004, 68006, and 68009

1. Model and serial number location

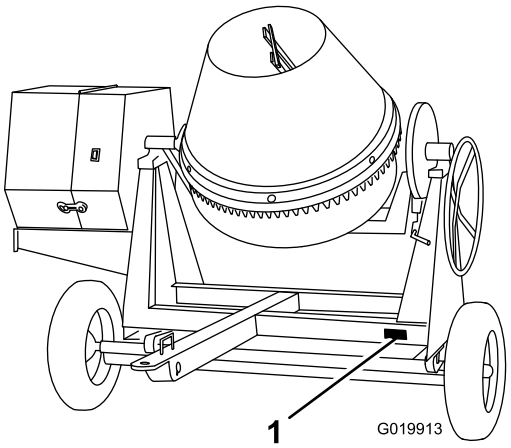

Figure 2
Models 68007 and 68008

1. Model and serial number location

Model No. _____

Serial No. _____

This manual identifies potential hazards and has safety messages identified by the safety alert symbol (Figure 3), which signals a hazard that may cause serious injury or death if you do not follow the recommended precautions.

© 2013—The Toro® Company
8111 Lyndale Avenue South
Bloomington, MN 55420

Contact us at www.Toro.com.
Printed in the USA
All Rights Reserved



Figure 3

1. Safety alert symbol

This manual uses 2 words to highlight information. **Important** calls attention to special mechanical information and **Note** emphasizes general information worthy of special attention.

Tire Information

The DOT tire information is located on the side of each tire. This information gives load and speed ratings. Replacement tires should have the same or better ratings. For more information go to http://www.nhtsa.gov/Vehicle+Safety/Tires.

Note: The various machines in this manual have different weights; refer to Specifications (page 14) to ensure that the tires on your machine meet or exceed the weight requirements of your machine.

Contents

Safety 4
- Safe Operating Practices 4
- Safety and Instructional Decals 7

Setup 9
- 1 Installing the Tow Pole—Models 68004, 68006, and 68009 9
- 2 Installing the Tongue—Models 68007 and 68008 9
- 3 Installing the Safety Chain 10

Product Overview 12
- Controls 13
- Specifications 14

Operation 14
- Preparing to Tow the Machine 14
- Towing the Machine 19
- Preparing to Use the Machine 20
- Lowering the Stabilizer Legs 20
- Opening and Closing the Cowl 21
- Adding Fuel 21
- Checking the Engine Oil Level 23
- Starting and Stopping the Engine 24
- Using the Machine 25
- Mixing the Material 25
- Using the Drum 25

Maintenance 27
- Recommended Maintenance Schedule(s) 27
- Premaintenance Procedures 27
  - Preparing the Machine for Maintenance 27
  - Disconnecting the Spark-plug Wire 27
  - Removing and Installing the Divider Plate 28
- Lubrication 29
  - Lubricating the Machine 29
- Engine Maintenance 29
  - Servicing the Air Cleaner 29
  - Changing the Engine Oil 30
  - Servicing the Spark Plug 31
  - Servicing the Spark Arrester 33
- Fuel System Maintenance 34
  - Servicing the Fuel System 34
- Belt Maintenance 35
  - Servicing the Drive Belts 35
  - Checking the Drive-belt Tension 35
  - Adjusting the Drive-belt Tension 35
  - Replacing the Drive Belts 36
- Cleaning 36
  - Cleaning the Machine 36

Storage 37
- Storing the Machine 37

Troubleshooting 38

Safety

Improperly using or maintaining the machine can result in injury. To reduce the potential for injury, comply with these safety instructions and always pay attention to the safety alert symbol ⚠, which means: *Caution*, *Warning*, or *Danger*—personal safety instruction. Failure to comply with the instruction may result in personal injury or death.

Safe Operating Practices

This product is capable of amputating hands. Always follow all safety instructions to avoid serious injury or death.

⚠ WARNING

Machining or handling stone, masonry, concrete, metal, and other materials can generate dust, mists, and fumes containing chemicals, such as silica, known to cause serious or fatal injury or illness, such as respiratory disease, silicosis, cancer, birth defects, or other reproductive harm.

- **Control dust, mist, and fumes at the source where possible. Water should be used for dust suppression when feasible.**
- **Use good work practices and follow the recommendations of the manufacturer or suppliers, OSHA, and other occupational and trade associations.**
- **Always follow respiratory precautions.**
- **When the hazards from inhalation cannot be eliminated, the operator and any bystanders should wear a respirator approved by OSHA for the material being handled.**

⚠ WARNING

Engine exhaust contains carbon monoxide, an odorless, deadly poison that can kill you.

Do not run the engine indoors or in an enclosed area.

Training

- Read the *Operator's Manual* and other training material. If the operator(s) or mechanic(s) cannot read or understand the information, it is the owner's responsibility to explain this material to them.
- Become familiar with the safe operation of the equipment, operator controls, and safety signs.
- All operators and mechanics should be trained. The owner is responsible for training the users.
- Never let children or untrained people operate or service the equipment. Local regulations may restrict the age of the operator.
- The owner/user can prevent and is responsible for accidents or injuries to people or damage to property.

Towing

Check with your local county or state towing safety regulations before towing the machine.

- In order to reduce the possibility of an accident while transporting the machine on public roads, make sure that the towing vehicle is mechanically sound and in good operating condition.
- Shut down the engine before transporting the machine.
- When towing with a ball hitch, ensure that the ball hitch you are using is the proper size for the hitch coupler on the machine.
- When towing with a pintle hitch, ensure that the eye of the tow pole is the correct dimension for the pintle hook.
- Inspect the hitch and coupling for wear. **Never** tow the machine with damaged or defective hitches, couplings, chains, or other components.
- Check the tire air pressure on the towing vehicle and the machine.
- Check the tire tread and sidewall for damage and wear.
- Properly attach the safety chains to the towing vehicle.
- Ensure that the directional and brake lights are working properly (if the machine is equipped with the light kit).
- Ensure that the directional, backup, and brake lights of the tow vehicle are working properly (if the machine is equipped with the light kit).
- Before towing, check to make certain your machine is correctly and securely attached to the towing vehicle.
- Ensure that the safety chains are properly secured to the vehicle, and leave enough slack for turning.
- Do not carry any material in the machine when towing.
- Avoid sudden stops and starts. This can cause skidding, or jackknifing. Smooth, gradual starts and stops will improve towing.
- Avoid sharp turns to prevent rolling. Tow only with a vehicle that has a hitch designed for towing. Do not attach towed equipment except at the hitch point.
- Do not tow the machine faster than 88 km/h (55 mph).
- Use caution when backing up; use a spotter outside the vehicle to guide you.
- Do not allow anyone to sit or ride on the machine.
- Disconnect the machine from the tow vehicle before using it.
- Place chock blocks underneath the tires to prevent them from rolling while the machine is parked.

Preparation

Become familiar with the safe operation of the equipment, operator controls, and safety signs.

- Use only accessories and attachments approved by the manufacturer.
- Wear personal protective equipment and appropriate clothing, including the following:
  - Hard hat
  - Respirator or dust mask
  - Face shield
  - Safety glasses
  - Hearing protection
  - Safety shoes
  - Long pants
  - Shirt with long sleeves that are tight at the wrists
  - Tight-fitting gloves without drawstrings or loose cuffs
- Secure long hair, loose clothing, or jewelry that may get tangled in moving parts.
- Operating the equipment safely requires the full attention of the operator. Do not wear radio or music headphones while operating the machine.
- Use extra care when handling fuels. They are flammable and the vapors are explosive. Use the following practices when handling fuel:
  - Use only an approved fuel container.
  - Never remove the fuel cap or add fuel with the engine running.
  - Allow the engine to cool before refueling.
  - Do not smoke.
  - Never refuel or drain the machine indoors.
  - Replace the fuel cap and tighten it securely.
  - Keep the container nozzle in contact with the tank during filling.
  - Never fill a container while it is inside a vehicle, trunk, pick-up bed, or any surface other than the ground.
  - Never store the machine or fuel container inside where there is an open flame, such as near a water heater or furnace.
  - If fuel is spilled, wipe it off the engine and equipment.
- Ensure that the machine is on a level surface before operating the machine.
- Chock the tires of the machine to prevent unintended movement.
- Before every use, do the following:
  - Inspect the coupler, ball, and hitch.
  - Ensure that all lights are functioning properly (if the machine is equipped with a light kit).
  - Ensure that the tires are properly inflated as recommended.
  - Ensure that the lug nuts are tight and torqued properly.
  - Ensure that the machine is properly secured.

Operation

- Never run an engine in an enclosed or poorly ventilated area.
- Only operate the machine in good lighting conditions.
- Before starting the machine, make sure that there are no persons or obstacles near or under the machine.
- Shut off the engine before leaving the machine for any reason.

  Never leave a running machine unattended. Always stop the engine and verify that all moving parts have stopped.
- Chock the tires of the machine or keep it attached to the towing vehicle when it is not in use, to prevent it from rolling.
- Avoid prolonged breathing of exhaust fumes. Engine exhaust fumes can cause sickness or death.
- Keep hands away from any moving parts. Keep feet away from the tires and the front post.
- Do not operate the machine under the influence of alcohol or drugs.
- Ensure that the area is clear of other people or pets before operating the machine. Stop the machine if anyone enters the area.
- Never place your hands or any solid object into the drum when the machine is in operation.
- Do not touch parts which may be hot from operation. Allow them to cool before attempting to maintain, adjust, or service the machine.
- Never move the machine while the engine is running.
- Keep the cowl closed and latched during operation.
- Ensure that all the guards and shields are securely in place before operating the machine.
- If the mixing paddles strike a foreign object or if the machine should start making an unusual noise or vibration, stop the engine and empty the drum. Wait for all moving parts to come to a complete stop and cool. Vibration is generally a warning of trouble. Inspect for clogging or damage. Clean and repair and/or replace damaged parts.
- Do not change the engine governor setting or overspeed the engine.
- Lightning can cause severe injury or death. If you see lightning or hear thunder in the area, do not operate the machine; seek shelter.

Maintenance and Storage

- Before performing maintenance, do the following:
  - Park the machine on level ground.
  - Stop the engine. Wait for all movement to stop before adjusting, cleaning, or repairing.
  - Let the engine cool before performing maintenance or storing.
  - Disengage all power and operation controls.
- Never lubricate, service, repair, or adjust the machine while it is running.
- Keep equipment materials clear from the muffler and engine to help prevent fires. Clean up any oil or fuel spillage.
- Never allow untrained personnel to service the machine.
- Keep hands, feet, and clothing away from moving parts. If possible, do not make adjustments with the engine running.
- Keep all parts in good working condition and all hardware tightened. Replace all worn or damaged decals.
- Remove any buildup of grease, oil, or debris from the machine.
- Stop and inspect the machine if a foreign object enters the drum or causes another obstruction. Make any necessary repairs before starting the machine.
- Do not tamper with safety devices.
- Chock the tires when storing the machine.
- Keep all nuts, bolts, screws, and hose clamps securely tightened. Keep equipment in good condition.
- Use only genuine Toro replacement parts to ensure that the original standards are maintained.

Safety and Instructional Decals

Safety decals and instructions are easily visible to the operator and are located near any area of potential danger. Replace any decal that is damaged or lost.



117–2718



125–4939

1. Warning—read the *Operator's Manual*.
2. Hand and arm entanglement at the belt drive; crushing hazard of hand; entanglement hazard of hand at the shaft—keep hands away from moving parts; keep all guards and shields in place.
3. Entanglement hazard at paddles—stop the engine and wait for all moving parts to stop before performing maintenance.
4. Toxic gas inhalation hazard—Don't run the engine in an enclosed space.
5. Explosion hazard—stop the engine and keep away from flames when refueling.

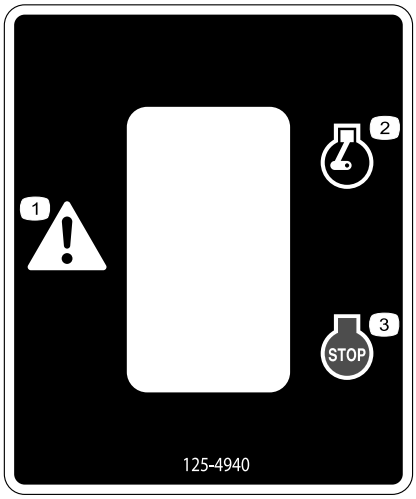

125–4940

1. Warning
2. Engine—run
3. Engine—stop

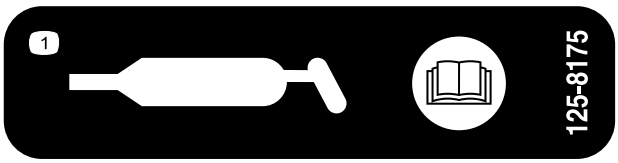

125–8175

1. Read the *Operator's Manual* for information on greasing the machine.

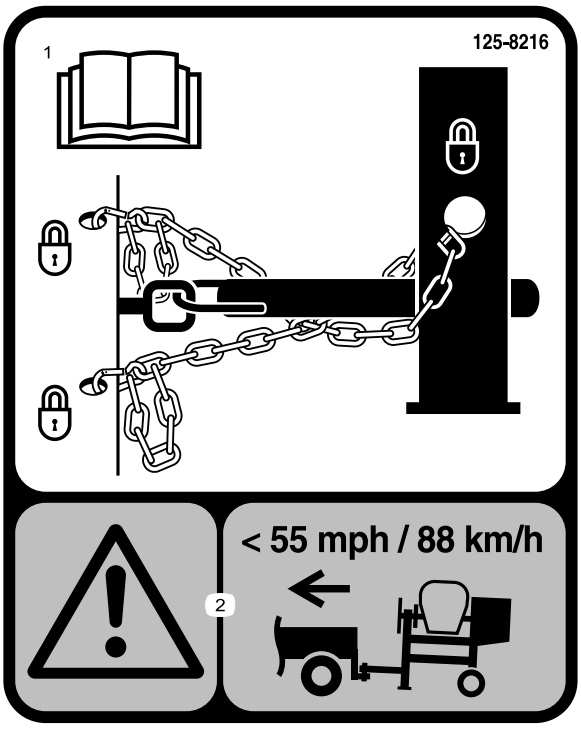

125–8216

1. Read the *Operator's Manual* for information on how to tow the machine.
2. Warning—limit towing speed to less than 55 mph / 88 km/h.

Setup

Loose Parts

Use the chart below to verify that all parts have been shipped.

Procedure	Description	Qty.	Use
1	Tow pole kit (sold separately)	1	Install the tow pole.
2	Tongue Front stabilizer leg Short bolt Long bolt Nut	1 1 6 1 7	Install the tongue.
3	Safety chain Connecting link	1 2	Install the safety chain.

1

Installing the Tow Pole—Models 68004, 68006, and 68009

Parts needed for this procedure:

1	Tow pole kit (sold separately)

Installing the Tow Pole to the Machine

Note: The tow pole is purchased separately and includes the nut and bolt needed for installation.

The machine has the following tow pole options:

Hitch Type	Length
50 mm (2 inch) ball—stamped	78.7 cm (31 inches) or 127 cm (50 inches)
50 mm (2 inch) ball—forged	78.7 cm (31 inches) or 127 cm (50 inches)
Pintle	78.7 cm (31 inches) or 127 cm (50 inches)

1. Remove the bolt and nut from the tow pole (Figure 4).

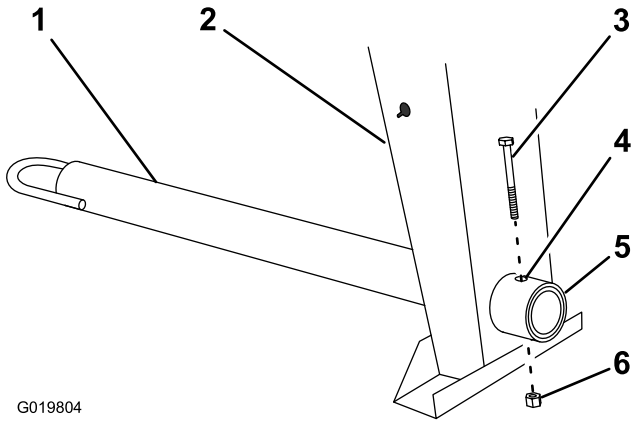

Figure 4

1. Tow pole
2. Front post
3. Bolt
4. Bolt hole
5. Frame fitting
6. Nut

2. Slide the tow pole forward and align the hole in the pole with the hole in the frame fitting (Figure 4).
3. Insert the bolt through the holes in the fitting and the pole (Figure 4).
4. Thread the nut onto the bolt and tighten them until they are tight against the frame fitting (Figure 4).

   Note: If the self-locking nylon insert in the locknut wears with use, replace the nut with a new Grade 5 or Grade 8 locknut.

2

Installing the Tongue—Models 68007 and 68008

Parts needed for this procedure:

1	Tongue
1	Front stabilizer leg
6	Short bolt
1	Long bolt
7	Nut

Installing the Tongue to the Machine

1. Lower the rear stabilizer legs; refer to Lowering the Stabilizer Legs (page 20).
2. Place jack stands under the front frame rail to prevent the machine from tipping forward (Figure 5).

⚠ WARNING

Mechanical or hydraulic jacks may fail to support the machine and cause serious injury.

Use jack stands when supporting the machine.

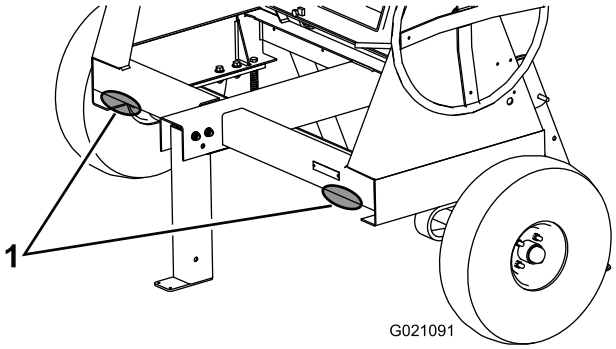

Figure 5

1. Support points

3. Remove the 2 nuts and bolts that secure the front stabilizer leg to the frame (Figure 6), and remove the front stabilizer leg.

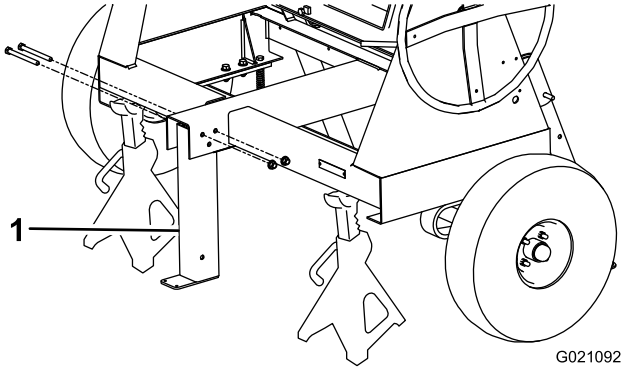

Figure 6

1. Front stabilizer leg

4. Install the tongue into the opening at the front of the machine, and secure it with 6 nuts and short bolts torqued to 102 N-m (75 ft-lb); refer to Figure 7.

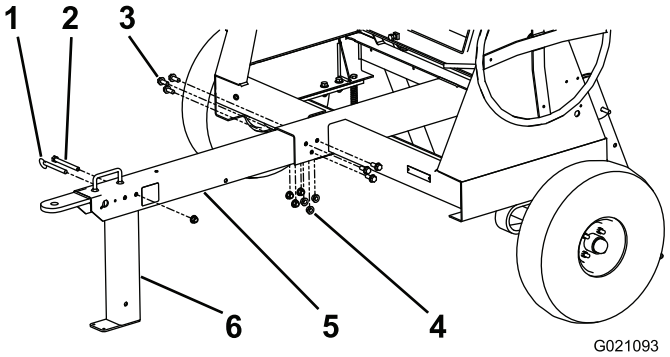

Figure 7

1. Clevis pin
2. Long bolt
3. Short bolt (6)
4. Nut (7)
5. Tongue
6. Front stabilizer leg

5. Align the top rear hole in the front stabilizer leg to the hole past the handle in the front of the tongue (Figure 7).
6. Install the long bolt through the holes, and secure it with a nut torqued to 102 N-m (75 ft-lb); refer to Figure 7.

   Note: The stabilizer leg pivots rearward on the bolt. If you install the bolt into the wrong hole, the stabilizer leg will not work properly.
7. Insert the clevis pin to lock the front stabilizer leg in position (Figure 7).

3

Installing the Safety Chain

Parts needed for this procedure:

1	Safety chain
2	Connecting link

Models 68004, 68006, and 68009 (Side-dump)

1. Form a hook on the end of a bendable piece of rod or stiff wire, (not included), and insert it through both keyholes in the front post of the machine (Figure 8A).

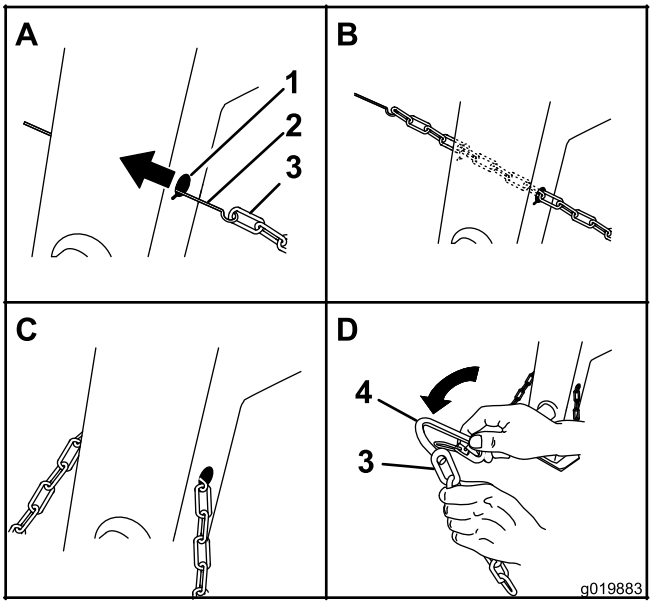

Figure 8

1. Keyhole
2. Rod or wire (not included)
3. Safety chain
4. Connecting link

2. Attach the safety chain to the length of rod or wire (Figure 8A).
3. Pull the rod, or wire, and the safety chain through both keyholes (Figure 8B).

   Note: Ensure that approximately equal lengths of safety chain extend from either side of the front post.

Models 68007 and 68008 (End-dump)

1. Form a hook on the end of a bendable piece of rod or stiff wire (not included) and insert it through both keyholes in the tongue of the machine (Figure 9).

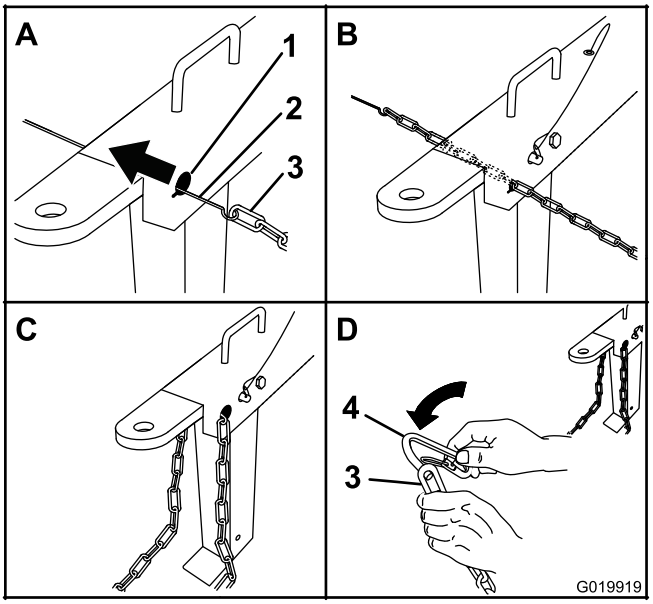

Figure 9

1. Keyhole
2. Rod or wire (not included)
3. Safety chain
4. Connecting link

2. Attach the safety chain to the length of rod or wire (Figure 9).
3. Pull the rod, or wire, and the safety chain through both keyholes (Figure 9).

   Note: Ensure that approximately equal lengths of safety chain extend from either side of the tongue.

Installing the Connecting Links

1. Align the connecting link to the last link in one end of the safety chain (Figure 8D and Figure 9D).
2. Insert the connecting link through the chain link until the connecting link snaps closed.
3. Repeat steps 1 and 2 to install the other connecting link in the other end of the safety chain.

Product Overview

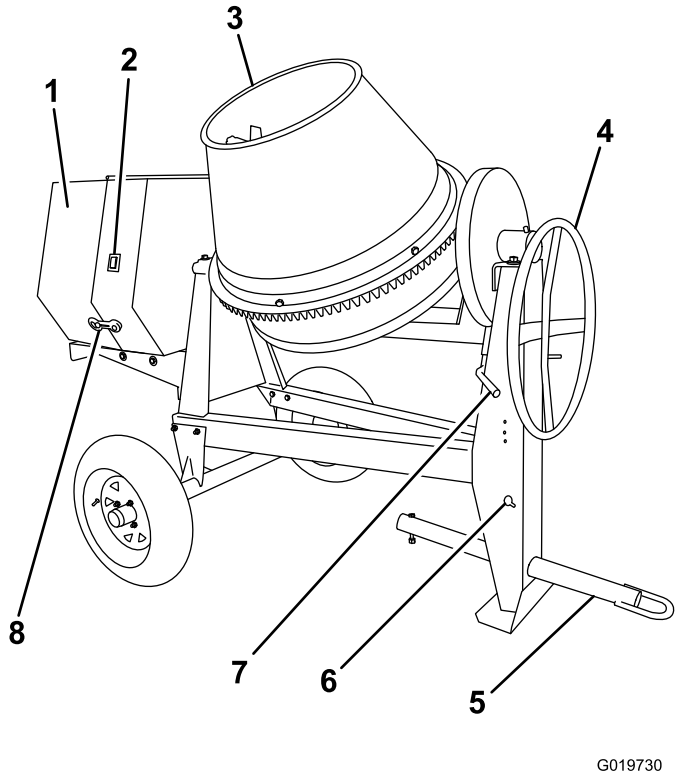

Figure 10

Models 68004, 68006, and 68009

1. Engine cowl
2. Engine switch
3. Drum
4. Handwheel
5. Tow pole
6. Safety-chain keyholes
7. Drum-tilt brake
8. Rubber latch

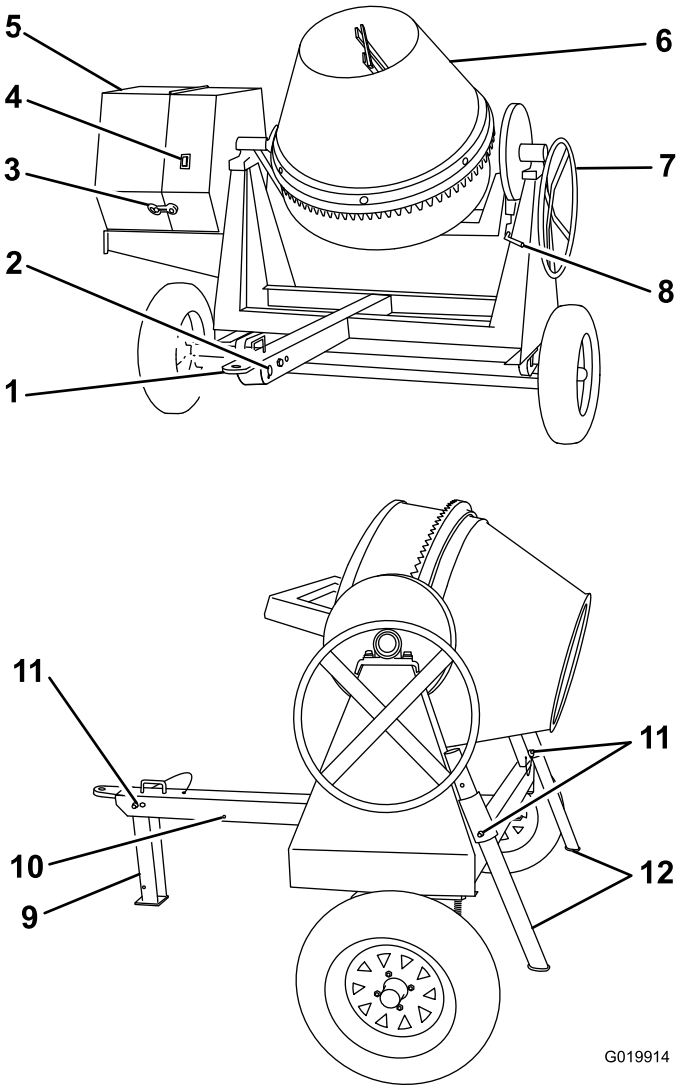

Figure 11

Models 68007 and 68008

1. Tongue-mounted tow coupler
2. Safety-chain keyholes
3. Rubber latch
4. Engine switch
5. Engine cowl
6. Drum
7. Handwheel
8. Drum-tilt brake
9. Front stabilizer leg
10. Rearward pin hole
11. Clevis pin
12. Rear stabilizer legs

Controls

Become familiar with all of the controls before you start the engine and operate the machine.

Engine Switch

When the engine switch on the cowl is in the **Run** position, it allows the engine to run. Moving the engine switch to the **Stop** position stops the engine.

Handwheel

The handwheel controls the discharging action of the drum.

Drum-tilt Brake

The drum-tilt brake locks the drum into an upright position or a discharging position.

Engine Controls

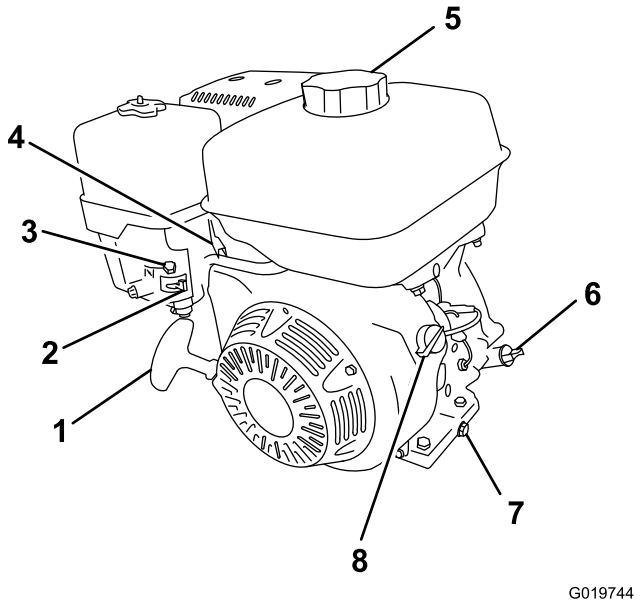

Figure 12

1. Recoil-start handle
2. Fuel valve
3. Choke lever
4. Throttle lever
5. Fuel cap
6. Dipstick
7. Oil-drain plug
8. On/Off switch

Fuel Valve

The fuel valve (Figure 13) is located underneath the choke lever. Move the lever for the fuel valve to the On position before attempting to start the engine. When you have finished mixing, stop the engine and move the fuel valve lever to the Off position.

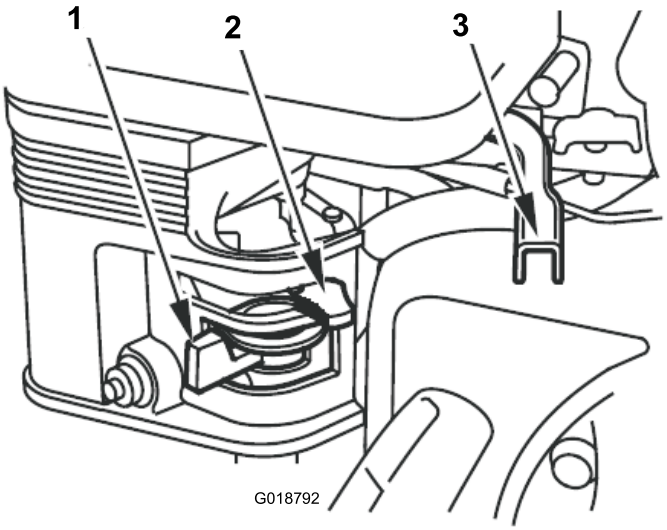

Figure 13

1. Fuel valve
2. Choke lever
3. Throttle lever

Choke Lever

Use the choke lever (Figure 13) to start a cold engine. Before pulling the recoil-start handle, move the choke lever to the closed position. Once the engine is running, move the choke lever to the open position. Do not use the choke if the engine is already warmed up or the air temperature is high.

Throttle Lever

The throttle lever (Figure 13) controls the speed (rpm) of the engine. It is located next to the choke lever. It sets the engine speed and therefore can increase and decrease the rotation speed of the mixing paddles. For best performance, set this control to the fast position when mixing material.

Engine On/Off Switch

The On/Off switch (Figure 14) allows the operator of the machine to start and stop the engine. This switch is located on the front of the engine. Rotate the On/Off switch to the On position to start and run the engine. Rotate the On/Off switch to the Off position to stop the engine.

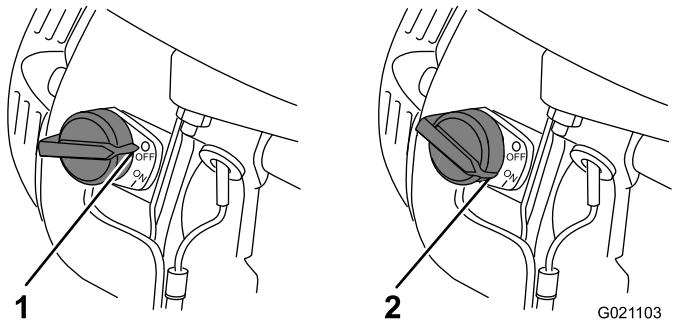

Figure 14

1. **Off** position
2. **On** position

Recoil-start Handle

To start the engine, pull the recoil-start handle (Figure 12) quickly to turn the engine over. The engine controls described above must all be set correctly for the engine to start.

Oil-level Switch

The oil-level switch is located inside the engine, and it will not allow the engine to run in the event the oil level is below the safe operating limit.

Specifications

Note: Specifications and design are subject to change without notice.

Model	68004	68006	68007	68008	68009
Batch Capacity	0.17 cubic meters (6.0 cubic feet)	0.255 cubic meters (9.0 cubic feet)	0.255 cubic meters (9.0 cubic feet)	0.255 cubic meters (9.0 cubic feet)	0.255 cubic meters (9.0 cubic feet)
Total Volume	0.255 cubic meters (9.0 cubic feet)	0.43 cubic meters (15.1 cubic feet)	0.43 cubic meters (15.1 cubic feet)	0.43 cubic meters (15.1 cubic feet)	0.43 cubic meters (15.1 cubic feet)
Drum Material	Steel	Steel	Steel	Polyethylene	Polyethylene
Length	198.1 cm (78 inches)	213.4 cm (84 inches)	215.9 cm (85 inches)	215.9 cm (85 inches)	213.4 cm (84 inches)
Width	116.8 cm (46 inches)	142.2 cm (56 inches)	215.9 cm (85 inches)	215.9 cm (85 inches)	142.2 cm (56 inches)
Height	147.3 cm (58 inches)	165.1 cm (65 inches)	180.3 cm (71 inches)	180.3 cm (71 inches)	165.1 cm (65 inches)
Weight	313 kg (690 lb)	362.9 kg (800 lb)	396.9 kg (875 lb)	396.9 kg (875 lb)	380.9 kg (837 lb)

Operation

Important: Before operating, check the fuel and oil levels, and remove debris from the machine. Ensure that the area is clear of people.

Preparing to Tow the Machine

Important: Ensure that your tow vehicle has towing capacity for the weight of the machine.

Important: Use a Class 2 or larger receiver.

Note: Ensure that your tow vehicle has the appropriate hitch to tow the machine; options include a 50 mm (2 inch) ball hitch or a pintle hitch.

Note: If the machine is equipped with a trailer-light kit, ensure that the electrical connector of the tow vehicle is compatible with the electrical connector of the machine. If your tow vehicle has a different type of plug, obtain an adapter from an automotive parts store.

1. Ensure the engine is stopped, the fuel valve is off, and the drum is empty.
2. Using the handwheel, position the drum so that it is pointing down toward the ground (Figure 15).

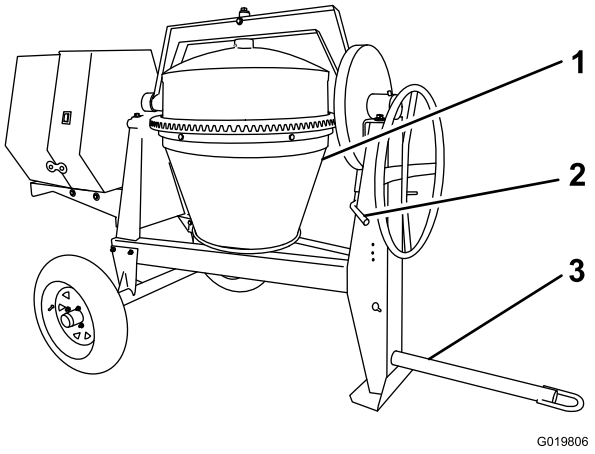

Figure 15

1. Drum pointing down
2. Drum-tilt brake engaged
3. Tow pole bolted in place

3. Lock the drum into position by pushing down on the drum-tilt brake handle (Figure 16).

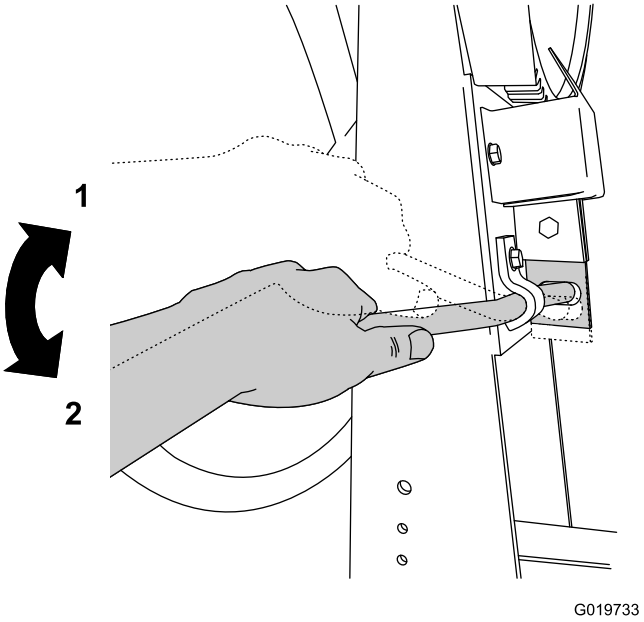

Figure 16
Drum-Tilt Brake

1. Unlocked position
2. Locked position

4. Ensure the engine cowl is closed and latched; refer to Closing the Cowl (page 21).
5. Inspect the tires and wheels; refer to Checking the Tires and Wheels (page 15).

Checking the Tires and Wheels

Service Interval: Before each use or daily—Inspect the tires and wheels.

⚠ WARNING

Failure to maintain correct tire pressure may result in tire failure and loss of control, resulting in property damage and serious injury or death.

- **Check the tire pressure frequently to ensure proper inflation. If the tires are not inflated to the correct pressure, they will wear prematurely.**
- **Inspect the tire condition before towing and after any operating accident.**

The DOT tire information is located on the side of each tire. This information gives load and speed ratings. Replacement tires should have the same or better ratings. For more information go to http://www.nhtsa.gov/Vehicle+Safety/Tires.

Note: The various machines in this manual have different weights; refer to Specifications (page 14) to ensure that the tires on your machine meet or exceed the weight requirements of your machine.

1. Visually inspect the tires for damage and wear (Figure 17 and Figure 18).

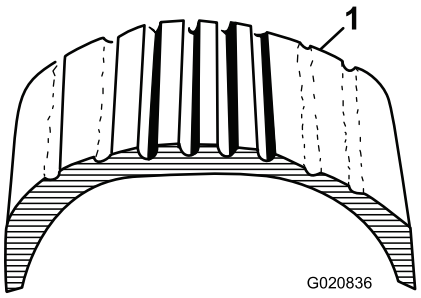

Figure 17

1. Example of tire wear caused by underinflation

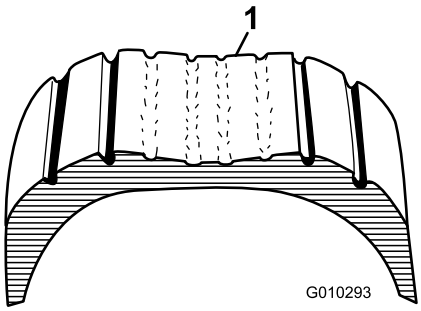

Figure 18

1. Example of tire wear caused by overinflation

2. Ensure that the tires are inflated to the correct air pressure. The following Tire Air Pressure table shows the appropriate air pressure for the tires as installed at the factory.

   Important: Always check the information on the actual tires for the correct air pressure requirement.

   Important: The most common cause of tire trouble is underinflation. Maintain full air pressure.

Tire Air Pressure

Model	Tire pressure
68004C	Max 414 kPa (60 psi)
68006C, 68007C, 68008C, 68009C	Max 241 kPa (35 psi)

3. Ensure that the wheel lug nuts are torqued to 108 to 122 N-m (80 to 90 ft-lb).

   Note: Check the torque of the wheel lug nuts initially and after towing.

   Note: Torque the lug nuts in the sequence shown in Figure 19.

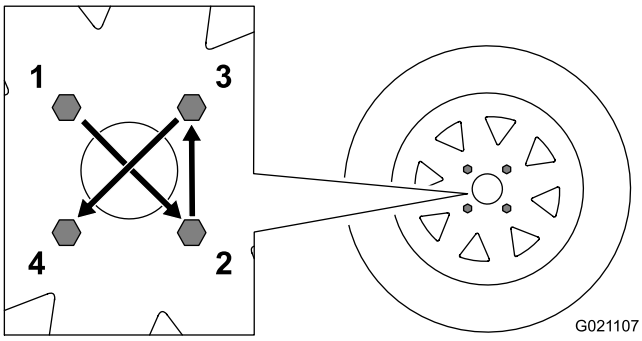

Figure 19

Raising the Stabilizer Legs (Models 68007 and 68008)

Models 68007 and 68008 have a front stabilizer leg and 2 rear stabilizer legs.

Raise the stabilizer legs before towing the machine.

1. Adjust the machine so that there is no weight resting on the rear stabilizer legs.
2. Pull the clevis pin out from one of the rear stabilizer legs and the bracket (Figure 20).

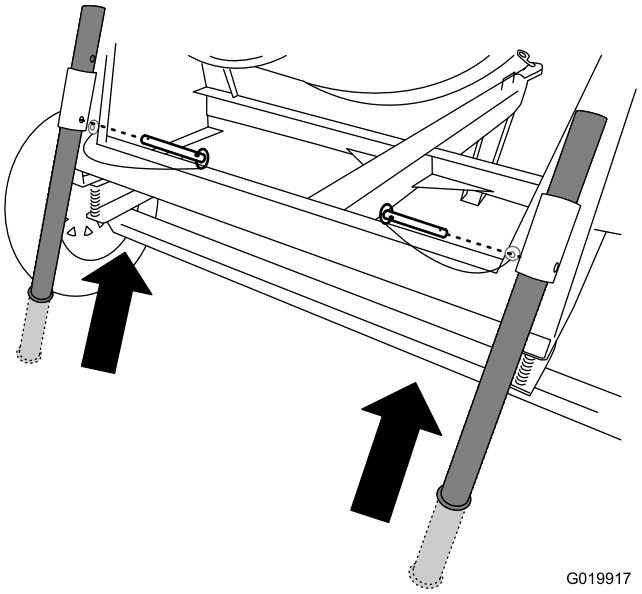

Figure 20

3. Slide the stabilizer leg up in the bracket and align the pin hole of the bracket with the lower hole in the stabilizer leg (Figure 20).
4. Push the clevis pin through the hole in the bracket and the stabilizer leg (Figure 20).
5. Repeat steps 1 through 4 for the other rear stabilizer leg.
6. Lift upward on the tongue so that there is no weight resting on the front stabilizer leg.
7. Pull the clevis pin out from the front stabilizer leg and the tongue (Figure 21).

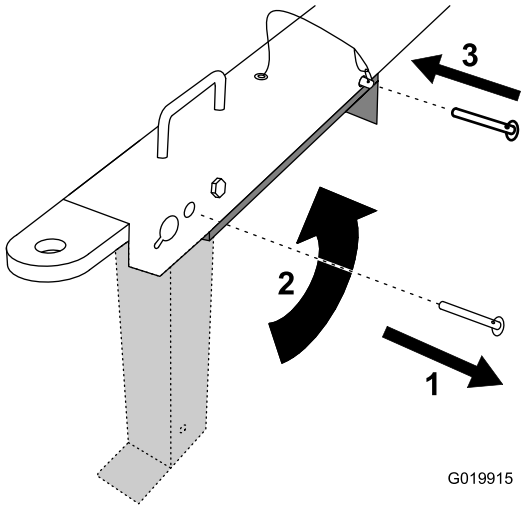

Figure 21

1. Remove the clevis pin.
2. Rotate the stabilizer leg up.
3. Install the clevis pin.

8. Rotate the front stabilizer leg up into the tongue (Figure 21).
9. Push the clevis pin through the rearward hole in the tongue and the front stabilizer leg (Figure 21).

Hitching a Machine with a Stamped Ball Coupler

1. Apply chassis grease to the socket of the coupler and the area of the clamp that contacts the ball.
2. Oil the pivot points and sliding surfaces of the coupler with SAE 30 motor oil.
3. Open the coupler latch (Figure 22).

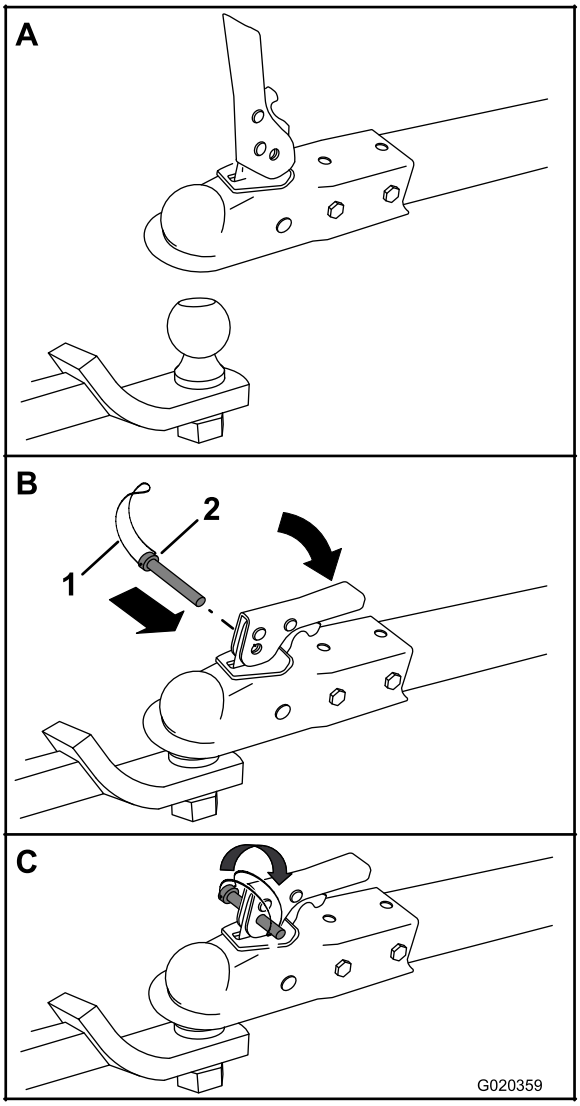

Figure 22

1. Bail
2. Safety pin

4. Position the coupler on top of the hitch ball (Figure 22A).
5. Close the coupler latch (Figure 22B).
6. Open the bail on the safety pin, and insert the pin through the hole in the latch (Figure 22B).
7. Rotate the free end of the bail over the end of the safety pin that is protruding through the latch (Figure 22C).
8. If the machine is equipped with a trailer-light kit, connect the wire plug of the tow vehicle to the wire plug of the machine.

Hitching a Machine with a Forged Ball Coupler

1. Apply removable thread-locking compound to the threads of the coupler bolt to prevent the coupler handle from coming loose (Figure 23).

Important: **Apply thread-locking compound as needed in the future.**

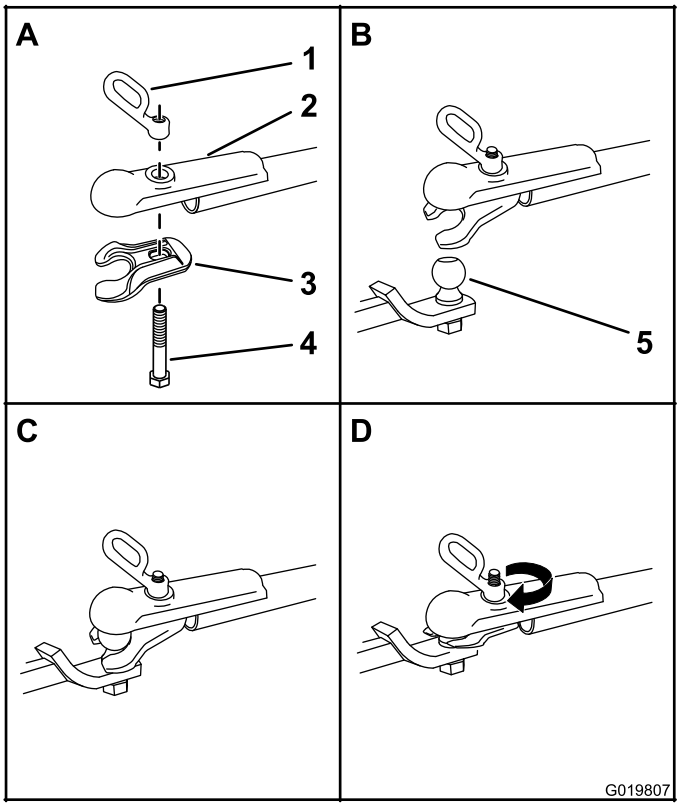

Figure 23

1. Coupler handle
2. Coupler
3. Clamp
4. Bolt
5. Hitch ball

2. Apply chassis grease to the socket of the coupler and the area of the clamp that contacts the ball.
3. Push the coupler bolt up through the coupler clamp and the coupler top, and connect the coupler handle to the bolt (Figure 23A).
4. Position the coupler so that the socket is on top of the hitch ball and the clamp is under the ball (Figure 23C).
5. Turn the coupler handle clockwise to thread it onto the bolt until it is secure (Figure 23D).

   Note: Use a wrench to keep the bolt from spinning.
6. If the machine is equipped with a trailer-light kit, connect the wire plug of the tow vehicle to the wire plug of the machine.

Hitching a Machine with a Pintle Hitch Coupler

1. Remove the pin from the pintle hitch and open it (Figure 24).

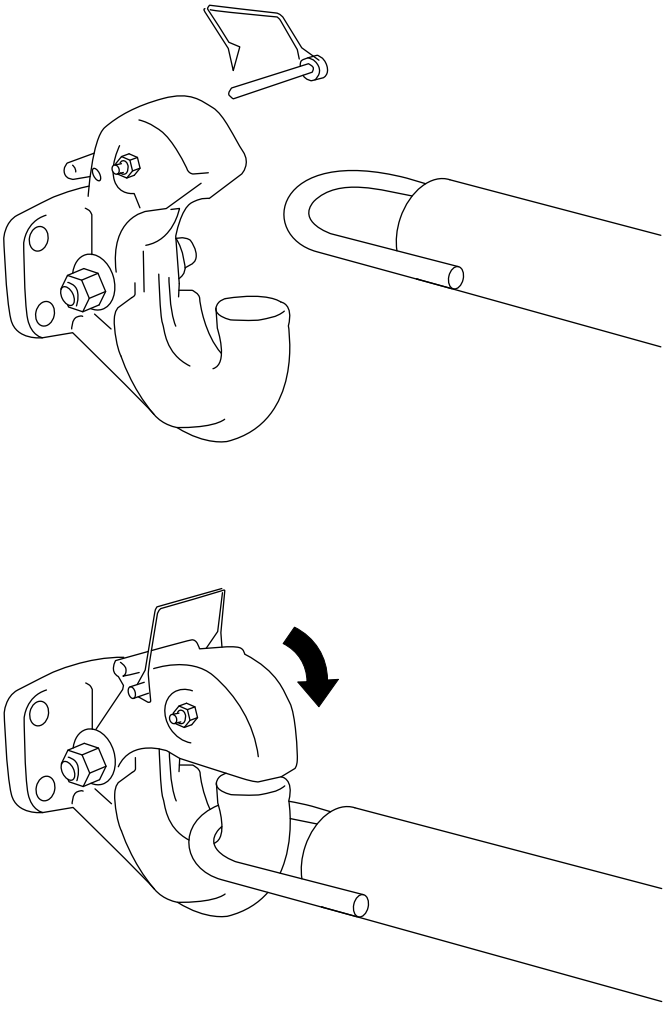

Figure 24

2. Position the ring on the tow pole onto the hook of the pintle hitch (Figure 24).
3. Close the top of the pintle hitch and secure it with the pin (Figure 24).
4. If the machine is equipped with a trailer-light kit, connect the wire plug of the tow vehicle to the wire plug of the machine.

Hitching a Machine with a Pin Hitch Coupler

1. Position the front of the pin hitch coupler so that it is located between the top and bottom plates of the pin/clevis receiver hitch of the tow vehicle, and ensure that the holes are aligned (Figure 25B).

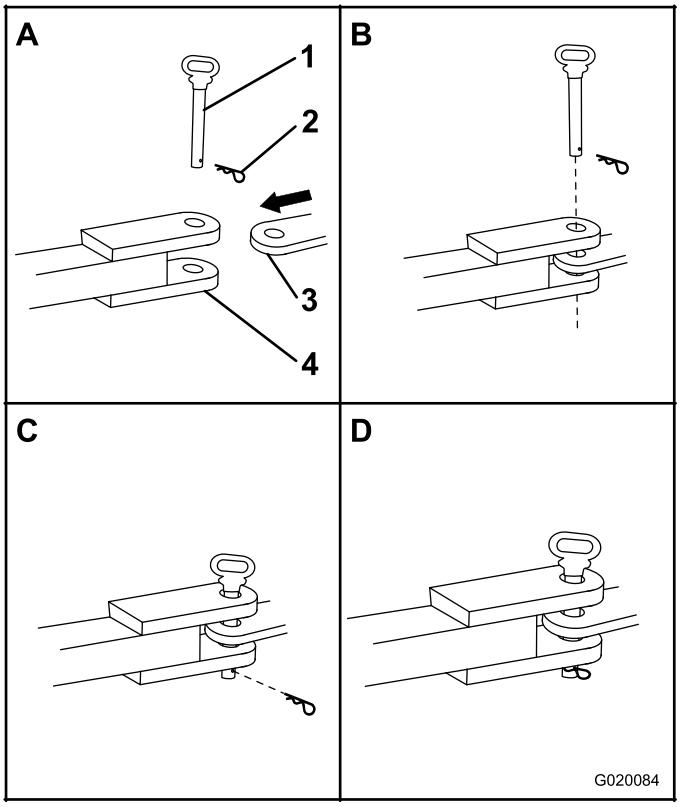

Figure 25

1. Hitch pin
2. Hairpin cotter
3. Pin hitch coupler
4. Pin/clevis receiver hitch

2. Insert a 19 mm (3/4 inch) or 22 mm (7/8 inch) hitch pin through the holes in the coupler and the receiver hitch (Figure 25B).
3. Insert a hairpin cotter through the hole in the bottom of the hitch pin (Figure 25C).
4. If the machine is equipped with a trailer-light kit, connect the wire plug of the tow vehicle to the wire plug of the machine.

Connecting the Safety Chains to the Tow Vehicle

1. Pull the safety chain through the slots in the keyholes, so that the lengths on each side are equal.
2. Cross both lengths of chain **under** the tow pole (under the tongue for end-dump models 68007 and 68008). For models 68004 68006, and 68009 refer to Figure 26. For models 68007 and 68008 refer to Figure 27.

   Note: Crossing the chains decreases the chances of the front of the machine dropping to the ground if the hitch does not hold the connection.

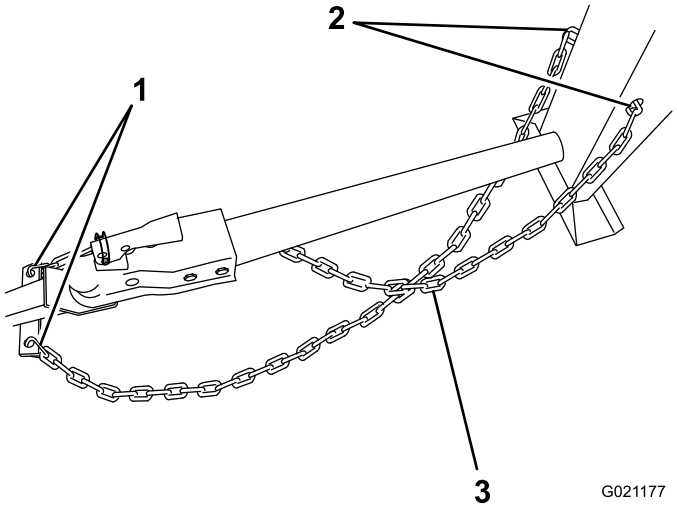

Figure 26

Models 68004, 68006, and 68009

1. Connecting links
2. Keyholes in front post
3. Chain crossed under tow pole

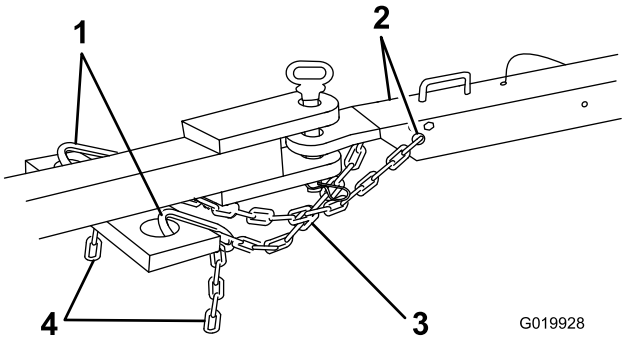

Figure 27

Models 68007 and 68008

1. Connecting links
2. Keyholes
3. Chain crossed under tongue
4. Chain

3. Connect each length of chain to the safety chain mounting point on the tow vehicle with the connecting links (Figure 28).

Important: Ensure that the chain has enough slack for turning around corners when towing the machine.

Note: For models 68004, 68006, and 68009, stow the excess chain inside the bottom of the front post by pushing it into the keyholes and latching the appropriate links into the keyhole slots.

Note: For models 68007 and 68008, connect the connecting links to the appropriate links in the safety chain (Figure 28). If the excess chain hangs too low and touches the ground, connect it again to the connecting link to raise it away from the ground.

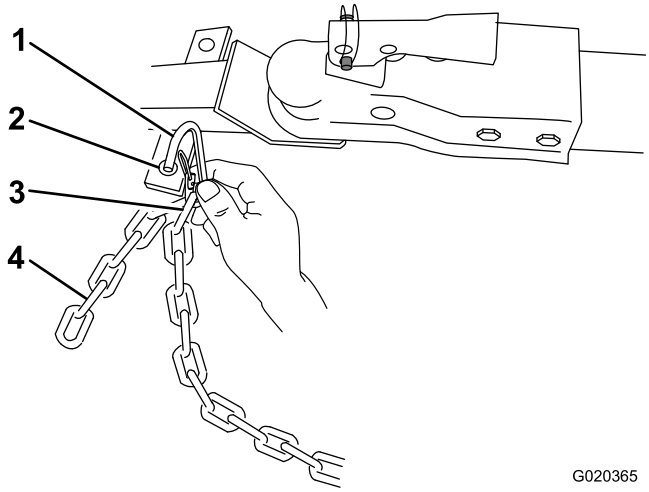

Figure 28

1. Connecting link
2. Safety chain mounting point on tow vehicle
3. Chain link
4. Chain

Towing the Machine

⚠ WARNING

Towing the machine at high speed increases the risk of a hitch malfunction and tire failure. Higher speeds also increase the momentum of the machine and braking distance. If the machine becomes detached from the tow vehicle at high speed, it could cause damage to property, or injury or death to bystanders.

Do not exceed 88 km/h (55 mph) when towing the machine. For poor road conditions or inclement weather, reduce speed accordingly.

⚠ WARNING

Towing the machine with material in the drum increases the risk of a hitch malfunction and tire failure. In addition, material could bounce out of the drum and hit other vehicles and/or people. Material in the drum increases the weight, which affects momentum and braking distance.

Do not tow the machine with material in the drum.

- Review and understand Safe Operating Practices (page 4).
- Test the brakes of the tow vehicle before towing.
- Avoid sudden starts and stops while towing the machine.

Preparing to Use the Machine

- Review all of the safety decals on the machine.
- Use a hard-hat, hearing protection, a shirt with long sleeves that are tight at the wrists, tight-fitting gloves without drawstrings or loose cuffs, eye protection, and a dust mask or respirator. A mesh visor alone does not provide sufficient eye protection; supplement with protective glasses.
- Ensure that you are familiar with safety regulations and shutdown procedures described in this *Operator's Manual* and the *Engine Owner's Manual*.
- Ensure that all guards are in place and in good condition.
- Ensure that the paddles are in place and in good condition.
- For models 68007 and 68008, lower the front and rear stabilizer legs.
- Check the fuel and oil levels of the engine.
- When preparing to mix material:
    1. Move the machine to a level job-site surface.
    2. Remove the machine from the tow vehicle.
    3. Chock the front and back of the tires to prevent the machine from moving.
    4. Ensure that the drum is in the mix position (upright).
    5. Ensure that the drum latch is engaged and that the drum does not rotate toward the dump position.

Lowering the Stabilizer Legs

Models 68007 and 68008 only

Models 68007 and 68008 have a front stabilizer leg and 2 rear stabilizer legs to keep the machine from tipping forward or backward during operation. Move the stabilizer legs into the lowered position before operating the machine.

1. Pull the clevis pin out from one of the rear stabilizer legs and the bracket (Figure 29).

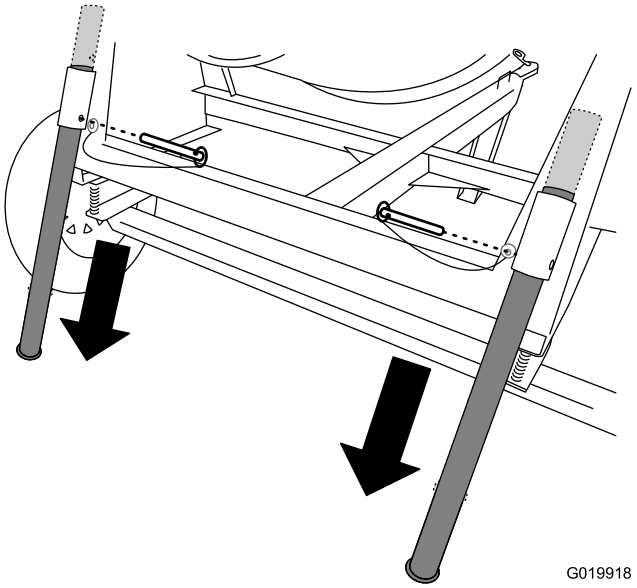

Figure 29

2. Slide the stabilizer leg down in the bracket and align the pin hole of the bracket with the upper hole in the stabilizer leg (Figure 29).
3. Push the clevis pin through the hole in the bracket and the stabilizer leg (Figure 29).
4. Repeat steps 1 through 3 for the other rear stabilizer leg.
5. Lift upward on the tongue to provide clearance for the front stabilizer leg.
6. Pull the clevis pin out from the front stabilizer leg and the tongue (Figure 30).

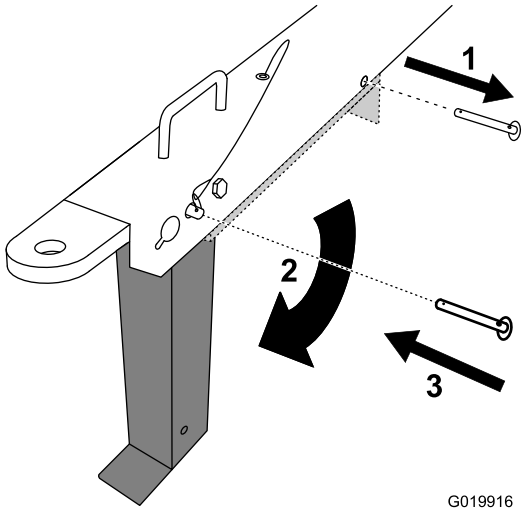

Figure 30

1. Remove the clevis pin.
2. Rotate the stabilizer leg down.
3. Install the clevis pin.

7. Rotate the front stabilizer leg down toward the ground (Figure 30).

8. Push the clevis pin through the front hole in the tongue and the front stabilizer leg (Figure 30), and carefully lower the machine to the ground.

Opening and Closing the Cowl

Opening the Cowl

1. At the side of the machine where the front cowl and rear cowl meet, grasp the ring of the latch and pull it off from the latch anchor on the rear cowl (Figure 31).

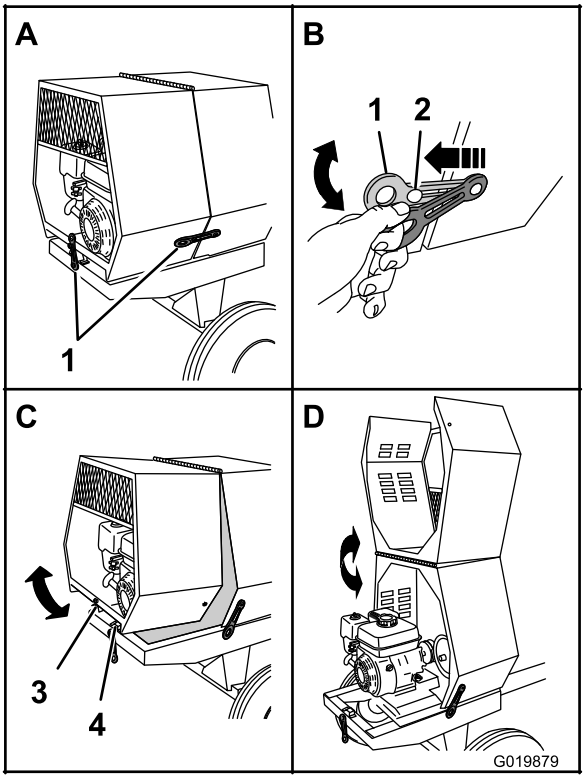

Figure 31

1. Latch
2. Latch anchor
3. Receiver
4. V-fitting

2. Repeat step 1 on the opposite side of the machine.
3. At the back of the machine where the rear cowl meets the frame of the machine, grasp the ring of the latch and pull it off from the latch anchor on the cowl (Figure 31).
4. Rotate the rear cowl up and forward until it is fully positioned on top of the front cowl (Figure 31).

Closing the Cowl

1. Rotate the rear cowl rearward and down until the receiver at the bottom center of the cowl is aligned with the V-fitting and flush on the frame of the machine (Figure 31).
2. At the back of the machine, grasp the ring of the latch and pull it on to the latch anchor on the rear cowl.
3. At the side of the machine, grasp the ring of the latch and pull it onto the latch anchor on the rear cowl.
4. Repeat step 3 on the opposite side of the machine (Figure 31).

Adding Fuel

- For best results, use only clean, fresh, unleaded gasoline with an octane rating of 87 or higher ((R+M)/2 rating method).
- Oxygenated fuel with up to 10% ethanol or 15% MTBE by volume is acceptable.
- Do not use ethanol blends of gasoline (such as E15 or E85) with more than 10% ethanol by volume. Performance problems and/or engine damage may result which may not be covered under warranty.
- Do not use gasoline containing methanol.
- Do not store fuel either in the fuel tank or fuel containers over the winter unless a fuel stabilizer is used.
- Do not add oil to gasoline.

⚠ DANGER

In certain conditions, fuel is extremely flammable and highly explosive. A fire or explosion from fuel can burn you and others and can damage property.

- **Fill the fuel tank outdoors, in an open area, when the engine is cold. Wipe up any fuel that spills.**
- **Never fill the fuel tank inside an enclosed trailer.**
- **Do not fill the fuel tank completely full. Add fuel to the fuel tank until the level is no higher than the screen on the filter in the fuel tank. This empty space in the tank allows the fuel to expand.**
- **Never smoke when handling fuel, and stay away from an open flame or where fuel fumes may be ignited by a spark.**
- **Store fuel in an approved container and keep it out of the reach of children. Do not buy more than a 30-day supply of fuel.**
- **Do not operate without the entire exhaust system in place and in proper working condition.**

⚠ DANGER

In certain conditions during fueling, static electricity can be released causing a spark which can ignite the fuel vapors. A fire or explosion from fuel can burn you and others and can damage property.

- **Always place fuel containers on the ground away from your vehicle before filling.**
- **Do not fill fuel containers inside a vehicle or on a truck or trailer bed because interior carpets or plastic truck bed liners may insulate the container and slow the loss of any static charge.**
- **When practical, remove fuel-powered equipment from the truck or trailer and fuel the equipment with the wheels on the ground.**
- **If this is not possible, then refuel such equipment on a truck or trailer from a portable container, rather than from a fuel dispenser nozzle.**
- **If a fuel dispenser nozzle must be used, keep the nozzle in contact with the rim of the fuel tank or container opening at all times until fueling is complete.**

⚠ WARNING

Fuel is harmful or fatal if swallowed. Long-term exposure to vapors can cause serious injury and illness.

- **Avoid prolonged breathing of vapors.**
- **Keep your face away from the nozzle and the fuel tank or conditioner opening.**
- **Keep fuel away from your eyes and skin.**

Important: Do not mix oil with fuel.

Recommended Fuel

Unleaded Gasoline	
U.S.	Pump octane rating 87 or higher
Except U.S.	Research octane rating 92 or higher Pump octane rating 87 or higher

Using Fuel Stabilizer/Conditioner

Use a fuel stabilizer/conditioner in the machine to keep the fuel fresh during storage of 90 days or less. If you are storing the machine for longer, drain the fuel tank; refer to Storing the Machine (page 37).

Important: Do not use fuel additives containing methanol or ethanol.

Add the correct amount of fuel stabilizer/conditioner to the fuel, and follow the directions of the manufacturer.

Note: Fuel stabilizer/conditioner is most effective when mixed with fresh fuel. To minimize the chance of varnish deposits in the fuel system, use fuel stabilizer at all times.

Filling the Fuel Tank

Capacity: 5.3 L (1.4 US gallons)

1. Park the machine on a level surface, stop the engine, and allow the engine to cool.
2. Clean around the fuel cap, and remove it (Figure 32).

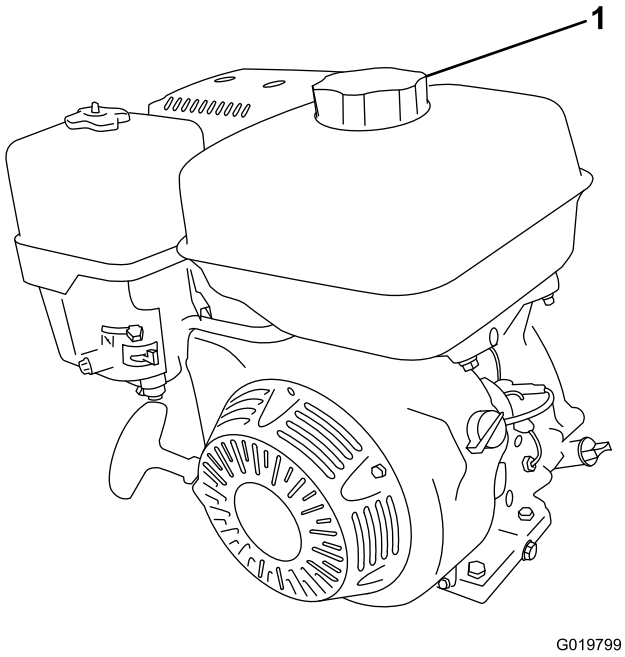

Figure 32

1. Fuel cap

3. Add unleaded gasoline to the fuel tank, until the level is at the bottom of the maximum fuel level, as shown in Figure 33.

   Important: This space in the tank allows the fuel to expand. Do not fill the fuel tank completely full.

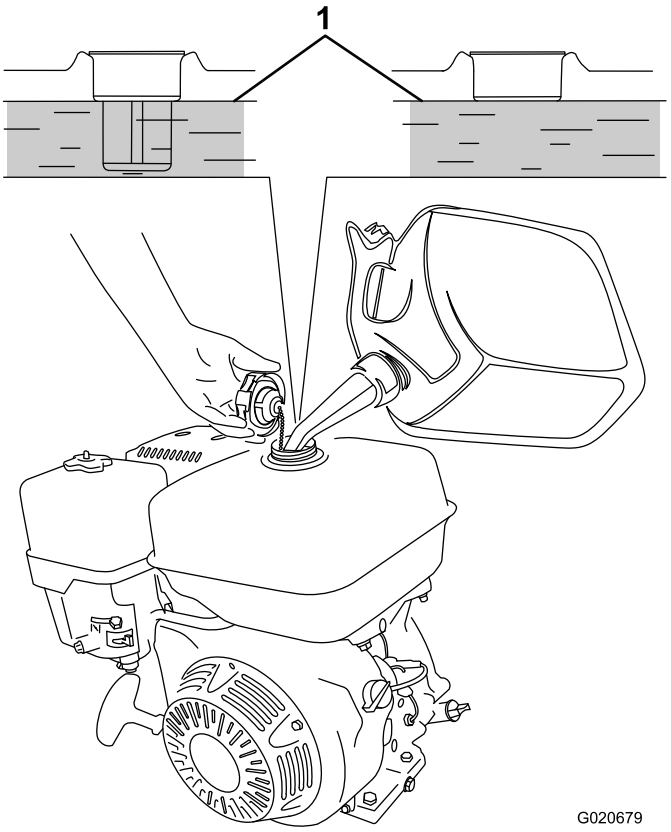

Figure 33

1. Maximum fuel level

4. Install the fuel cap securely (Figure 32).
5. Wipe up any fuel that may have spilled.

Checking the Engine Oil Level

Service Interval: Before each use or daily

Important: Use 4-cycle engine oil that meets or exceeds the requirements for API service category *SJ, SL, SM, or higher.*

Crankcase Capacity: 1.1 L (1.2 US qt)

Important: If the oil level in the crankcase is too low or too high and you run the engine, you may damage the engine. This type of damage is not covered by the warranty.

Note: Use SAE 10W-30 for general use. You can use the other viscosities shown in the chart when the average temperature in your area is within the indicated range (Figure 34).

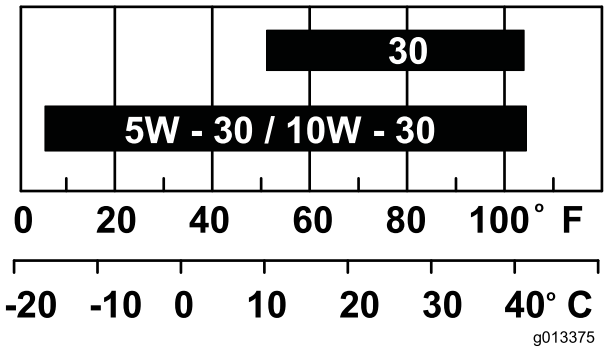

Figure 34

1. Place the machine on a flat, level surface, and stop the engine.
2. Allow the engine to cool.
3. Clean around the dipstick.
4. Remove the dipstick and wipe the end clean (Figure 35).

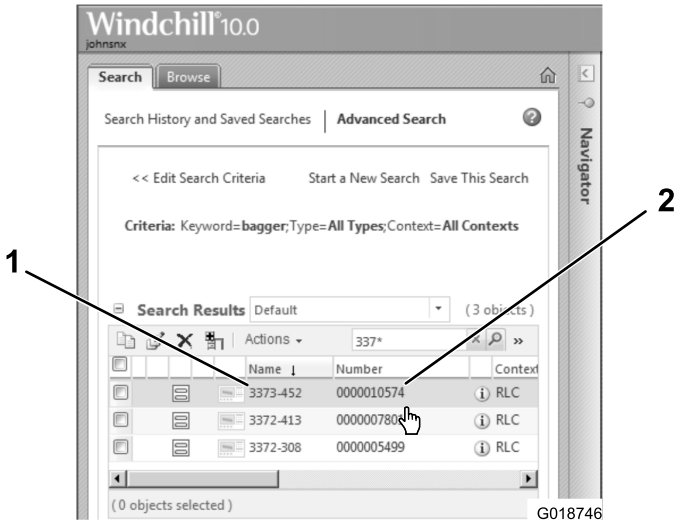

Figure 35

1. Fill port
2. Dipstick
3. Oil-level upper limit
4. Oil-level lower limit

5. Slide the dipstick fully into the fill port without threading it into the port (Figure 35).
6. Remove the dipstick and look at the end. If the engine oil level is low, slowly pour only enough oil into the fill port to raise the level to the Full mark on the dipstick (Figure 35).

   Note: Toro Premium Engine Oil is available from your Authorized Toro Dealer.
7. Replace and secure the dipstick (Figure 35).

Starting and Stopping the Engine

Starting the Engine

1. On the engine cowl, move the engine switch to the On position (Figure 36).

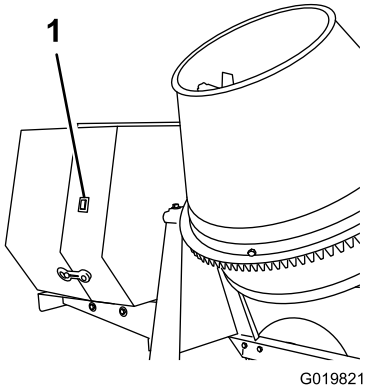

Figure 36

1. Engine switch

2. On the engine, move the throttle lever away from the Min position, 1/3 of the way toward the Max position (Figure 37); refer to Throttle Lever (page 13).

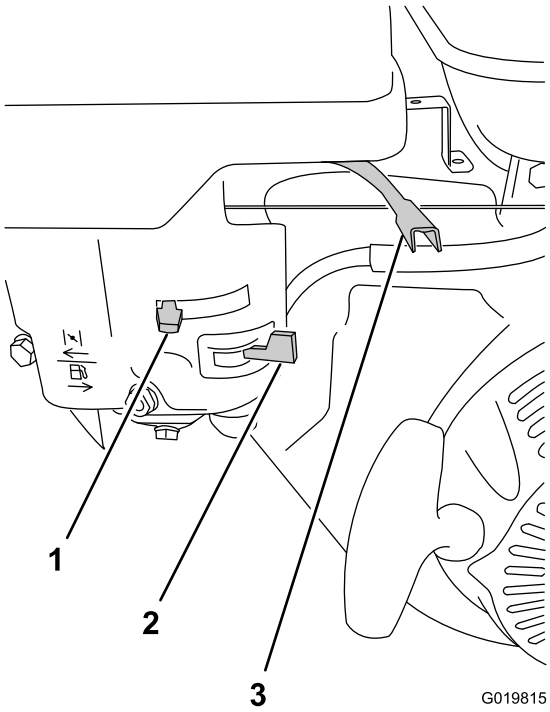

Figure 37

1. Choke lever
2. Fuel valve
3. Throttle lever

3. Move the lever of the fuel valve to the On position—all the way to the right (Figure 37); refer to Fuel Valve (page 13).
4. Position the choke lever as follows:
   - To start a cold engine, move the choke lever to the Closed position—all the way to the left (Figure 37); refer to Choke Lever (page 13).
   - To start a warm engine, move the choke lever in the Open position—all the way to the right.
5. Rotate the engine On/Off switch to the On position; refer to Engine On/Off Switch (page 13).
6. Pull the recoil-start handle lightly until you feel resistance, then pull the handle briskly. Return the starter handle gently (Figure 38).

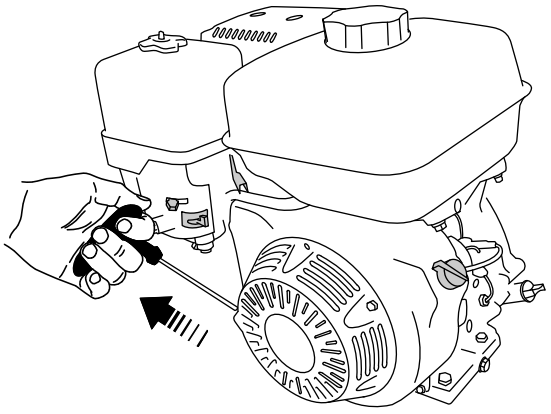

Figure 38

Note: If the choke lever is set to the Closed position to start the engine, gradually move it back toward the Open position as the engine warms up. If the engine stalls or hesitates, move the choke lever back toward the Closed position until the engine runs smooth. Allow the engine to warm up, then move the choke lever to the Open position; refer to Choke Lever (page 13).

Stopping the Engine

1. Move the throttle lever to the slow (turtle) position (Figure 37).
2. Turn the cowl-mounted engine switch off (Figure 36).
3. Move the fuel valve to the Off position (Figure 37) and rotate the engine On/Off switch to the Off position; refer to Engine On/Off Switch (page 13).

Important: If you need to stop the engine immediately, use the engine switch located on the outside of the engine cowl (Figure 36).

Using the Machine

⚠ DANGER

This machine is capable of amputating hands.

- **Stay in the operator's position while the machine is running.**
- **Keep all bystanders a safe distance from the machine.**
- **Stop the machine immediately if any people or animals enter the work area.**
- **Never place any part of your body into a position that causes an unsafe operating condition.**

1. Ensure that the machine is on level ground and the surrounding area is clear of obstacles. Disconnect the machine from the tow vehicle and chock the front and back of both tires to prevent any movement.
2. Read all the recommendations from the Safety section; refer to Safe Operating Practices (page 4) before using the machine.
3. Start the engine and close the engine cowl. Allow the engine to warm up at idle for 2 minutes; refer to Starting the Engine (page 24).
4. Use the handwheel to move the drum into an upright, slightly tilted position to allow access for pouring materials into the drum. This position also allows the mixing paddles to mix the materials more effectively.
5. Push the drum-tilt brake down to lock the drum into position and avoid accidentally dumping the material.

Important: If you need to stop the machine, use the engine switch located on the cowl; refer to Stopping the Engine (page 24).

Mixing the Material

⚠ DANGER

Eye and skin contact with concrete materials and breathing the dust involved is hazardous to your health.

- **Ensure that there is adequate air ventilation.**
- **Wear a dust mask to prevent inhalation of dust while using the machine; refer to Safe Operating Practices (page 4).**
- **Avoid direct contact of cement and concrete materials with skin and eyes.**

Important: Do not add more material than the batch capacity for your specific machine model; refer to Specifications (page 14).

Note: Follow the manufacturer's instructions that are printed on the packaging of the product that you are using.

Concrete has the following 4 basic ingredients:

- Sand
- Gravel
- Portland cement
- Water

Depending on the application, you can use different ratios of these 4 ingredients.

There are many variations of concrete mix recipes, depending on the application. It is important to use the appropriate quantity of water. Using too little water will result in dry areas in the mix, but using too much water will result in weaker concrete. The amount of water needed will vary depending on moisture content of the sand and gravel. The mix should have a thickness similar to peanut butter.

Keep the poured concrete damp for several days to obtain proper curing. Evaporation results in weaker concrete. Concrete cures through hydration, a reaction between water and cement.

Mixing Pre-mix Concrete

1. Ensure that the tilt brake is fully engaged and that the drum is operating at full speed.
2. Pour water into the drum.
3. Add the required amount of dry pre-mix.
4. Allow the drum to turn while the mix reaches the appropriate consistency.

Mixing Sand, Gravel, and Cement

The typical ratio for mixing concrete is 1 part Portland cement, 2 parts sand, and 3 parts gravel.

1. Ensure that the tilt brake is fully engaged and that the drum is operating at full speed.
2. Pour water into the drum.
3. Add the required amount of gravel.
4. Add the required amount of Portland cement.
5. Add the required amount of sand.
6. Allow the drum to turn while the mix reaches the appropriate consistency.

Note: Adding water and gravel before cement and sand allows the mix left in the drum from the previous batch to be tumbled off of the drum and paddles and into the next batch.

Using the Drum

⚠ DANGER

Contact with the mixing paddles could cause damage or injury.

Never put your hands inside the drum at any time.

Dumping the Drum

Note: When dumping a batch of material, leave the engine running so that the rotating drum helps dump the material.

1. Align a wheelbarrow or similar container of adequate capacity in the path of the drum opening.
2. While the drum is turning, firmly grasp the handwheel with one hand.
3. Using your other hand, pull upwards on the drum-tilt brake handle to release the brake.
4. Use 2 hands to slowly turn the handwheel, allowing the drum to tilt in the desired direction and dump the desired amount of material.
5. Turn the handwheel in the opposite direction to return the drum into an upright position.
6. Push down on the drum-tilt brake to lock the drum into position, avoiding accidental discharging of concrete mix.
7. After dumping a batch of material, clean the drum; refer to Cleaning the Drum (page 26).

   Note: This step will clean the paddles and drum between batches and prevent dried material from forming and contaminating the next batch of material.

Cleaning the Drum

Service Interval: After each use

Important: Do not strike on the drum with a shovel, hammer, or any other device to loosen any accumulated dried materials.

1. While the machine is running, use the handwheel to tilt the drum slightly.
2. Engage the drum-tilt brake to prevent the drum from tilting further and discharging the water.
3. As the drum is rotating, spray it thoroughly with water before the material dries.
4. Allow the drum to rotate and tumble the loose material and water, further loosening the rest of the material.
5. Continue to spray the drum with water to remove all of the material from the drum and mixing paddles.
6. When all of the material has been removed from the surfaces of the drum and mixing paddles, disengage the drum-tilt brake and use the handwheel to tilt the drum and dump the water from the drum.
7. If some material still remains in the drum, spray the drum with water while it is tilted downward, allowing the water and material to run out.

Maintenance

Important: **Before performing any maintenance procedures, first stop the engine, wait 5 minutes to allow all moving parts to come to a complete stop and cool, and disconnect the spark-plug wire.**

Recommended Maintenance Schedule(s)

Maintenance Service Interval	Maintenance Procedure
After the first 25 hours	• Change the engine oil.
Before each use or daily	• Inspect the tires and wheels. • Check the engine oil level. • Inspect the air-cleaner elements.
After each use	• Torque the lug nuts to 108 to 122 N-m (80 to 90 ft-lb) after towing. • Clean the drum.
Every 20 hours	• Inspect the drive-belt tension and adjust it as necessary. Replace the drive belts if they show any signs of wear, cracks, glazing, or damage.
Every 50 hours	• Clean the air-cleaner elements. Clean them more frequently in dusty operating conditions.
Every 100 hours	• Change the engine oil. • Check the spark plug. • Clean the spark arrester. • Clean the sediment cup. • Replace the drive belts.
Every 300 hours	• Replace the paper air-cleaner element. Replace it more frequently in dusty operating conditions. • Replace the spark plug.
Monthly	• Grease the trunnions and the drum spindle.
Yearly or before storage	• Clean the fuel sediment cup.

Premaintenance Procedures

Preparing the Machine for Maintenance

1. Park the machine on a level surface.
2. Remove the machine from the tow vehicle.
3. Chock the tires.
4. Open the rear cowl; refer to Opening the Cowl (page 21).
5. Ensure that the engine and muffler are cool.
6. Disable the engine; refer to Figure 39.

Disconnecting the Spark-plug Wire

Pull the spark-plug wire off the terminal of the spark plug (Figure 39).

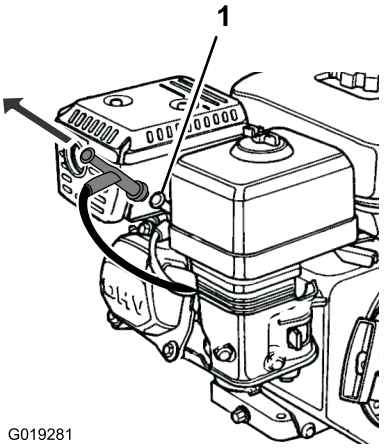

Figure 39

1. Spark plug

Removing and Installing the Divider Plate

You need to remove the divider plate to provide access before performing some maintenance procedures.

Removing the Divider Plate

1. Unlatch and open the cowl; refer to Opening the Cowl (page 21).
2. Use a wrench to remove the 4 bolts that secure the divider plate to the front cowl.

   Note: Keep the bolts and washers for installing the divider plate.

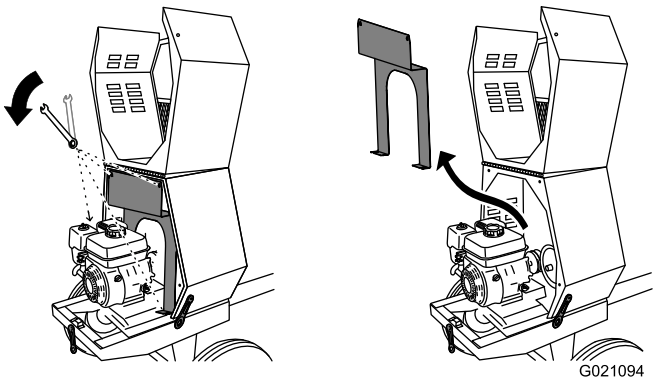

Figure 40

3. To remove the divider plate, lift it upward and tilt it back so that it clears various engine components.

Installing the Divider Plate

1. Guide the divider plate into position against the front cowl.

   Note: Start with the divider plate tilted slightly back, and then tilt it forward while lowering it into position.

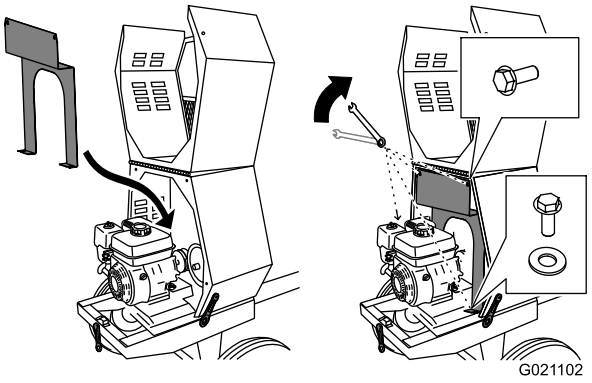

Figure 41

2. Align the bolt holes in the divider plate and the front cowl.
3. Install each of the 4 bolts, and hand-tighten them to prevent cross-threading.
4. Tighten the bolts with a wrench until they are secure.

Lubrication

Lubricating the Machine

Service Interval: Monthly—Grease the trunnions and the drum spindle.

1. Clean around each grease fitting with a rag, and lift the plastic cap off the grease fitting (Figure 42).
2. Use a grease gun to lubricate the grease fittings of both trunnions and the drum spindle with general-purpose lithium grease (Figure 42).
3. Wipe up any excess grease.

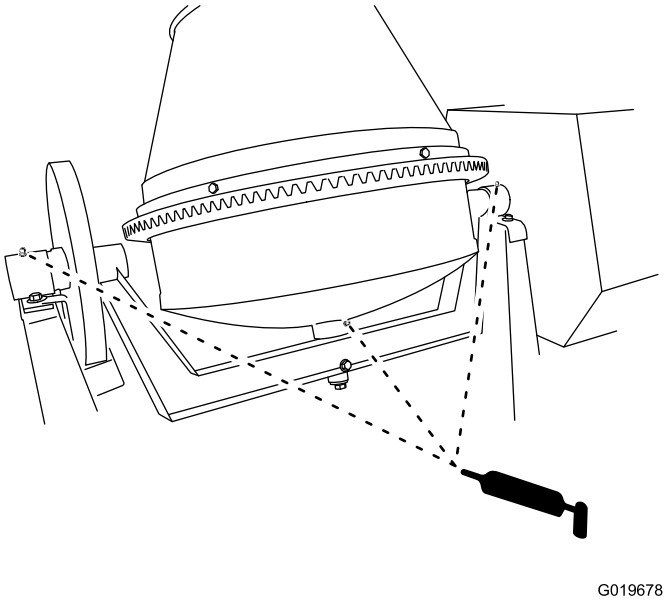

Figure 42

Important: Do not lubricate the pinion gear and ring gear. Lubrication will cause them to collect abrasive materials and accelerate wear.

Engine Maintenance

Servicing the Air Cleaner

Service Interval: Before each use or daily—Inspect the air-cleaner elements.

Every 50 hours—Clean the air-cleaner elements. Clean them more frequently in dusty operating conditions.

Every 300 hours/Yearly (whichever comes first)—Replace the paper air-cleaner element. Replace it more frequently in dusty operating conditions.

Important: Do not operate the engine without the air-filter assembly; extreme engine damage will occur.

1. Stop the engine and wait for all moving parts to stop.
2. Disconnect the wire from the spark plug; refer to Disconnecting the Spark-plug Wire (page 27).
3. Remove the nut that secures the cover (Figure 43).

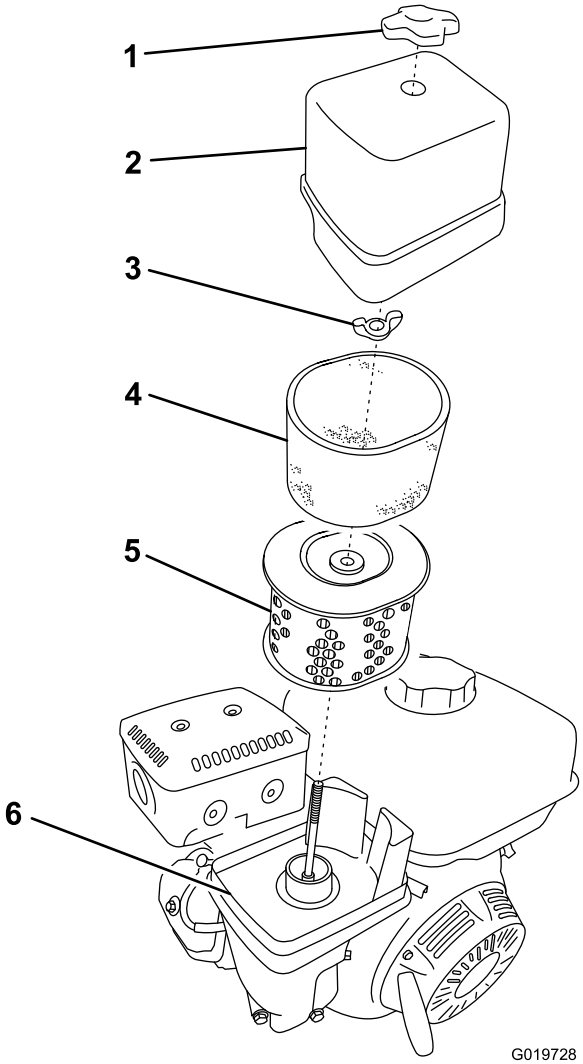

Figure 43

1. Cover nut
2. Cover
3. Wing nut
4. Foam element
5. Paper element
6. Base

4. Remove the cover.

   Note: Be careful to prevent dirt and debris from falling into the base.

5. Remove the foam and paper elements from the base (Figure 43).
6. Remove the foam element from the paper element (Figure 43).
7. Inspect the foam and paper elements, and replace them if they are damaged or excessively dirty.
8. If the paper element is excessively dirty, replace it.

   Note: Never try to brush dirt off the paper element; brushing forces the dirt into the fibers.

9. Clean the foam element in warm, soapy water or in a **nonflammable** solvent.

   Note: Do not use fuel to clean the foam element because it could create a risk of fire or explosion.

10. Rinse and dry the foam element thoroughly.
11. Dip the foam element in clean engine oil, then squeeze out the excess oil.

    Note: Excess oil in the foam element restricts the air flow through the element and may reach the paper filter and clog it.

12. Wipe dirt from the base and the cover with a moist rag.

    Note: Be careful to prevent dirt and debris from entering the air duct leading to the carburetor.

13. Install the air-cleaner elements and ensure that they are properly positioned.
14. Securely install the cover with the nut.

Changing the Engine Oil

Service Interval: After the first 25 hours

Every 100 hours

Toro Premium Engine Oil is available from your Authorized Toro Dealer.

Important: Use 4-cycle engine oil that meets or exceeds the requirements for API service category *SJ, SL, SM, or higher.*

Crankcase Capacity: 1.1 L (1.2 US qt)

Important: If the oil level in the crankcase is too low or too high and you run the engine, you may damage the engine. This type of damage is not covered by the warranty.

Note: Use SAE 10W-30 for general use. You can use the other viscosities shown in the chart when the average temperature in your area is within the indicated range (Figure 44).

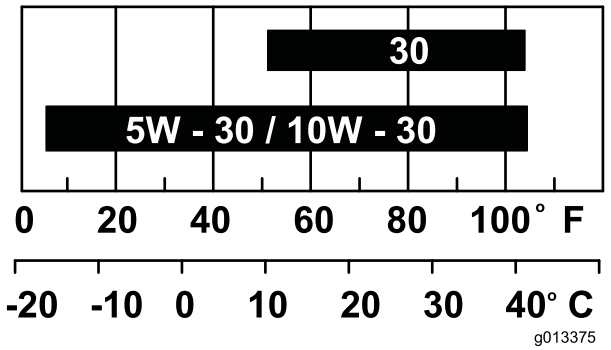

Figure 44

Draining the Engine Oil

⚠ WARNING

Oil may be hot after the engine has been run, and contact with hot oil can cause severe personal injury.

Avoid contacting the hot engine oil when you drain it.

1. Stop the engine and wait for all moving parts to stop.
2. Disconnect the wire from the spark plug; refer to Disconnecting the Spark-plug Wire (page 27).
3. Place a drain pan under the oil drain hole of the engine (Figure 45).

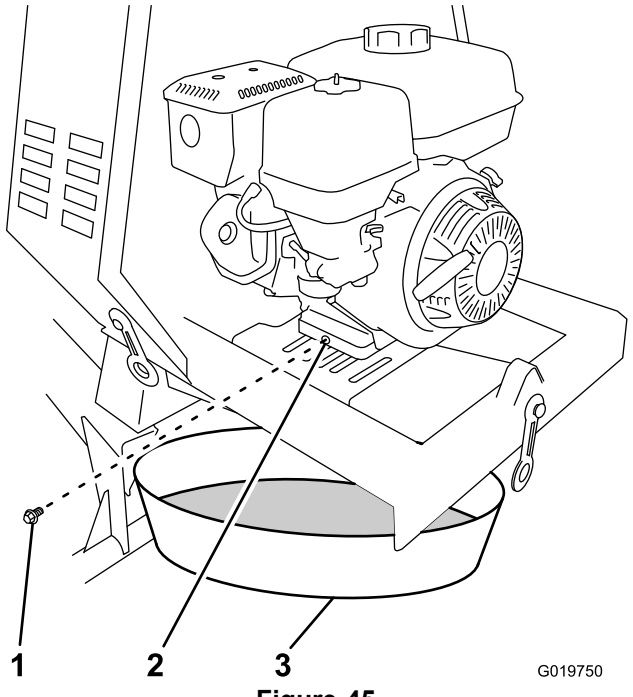

Figure 45

1. Oil drain plug
2. Oil drain hole
3. Oil drain pan

4. Remove the drain plug and catch the oil in the oil drain pan (Figure 45).

5. When the oil has drained completely, install the drain plug with a new washer (Figure 45).

   Note: Dispose of the used oil at a certified recycling center.

Filling the Engine Crankcase with Oil

1. Remove the dipstick (Figure 46) and slowly pour oil into the fill hole until the oil reaches the upper-limit mark (bottom edge of the oil-fill hole) on the dipstick.

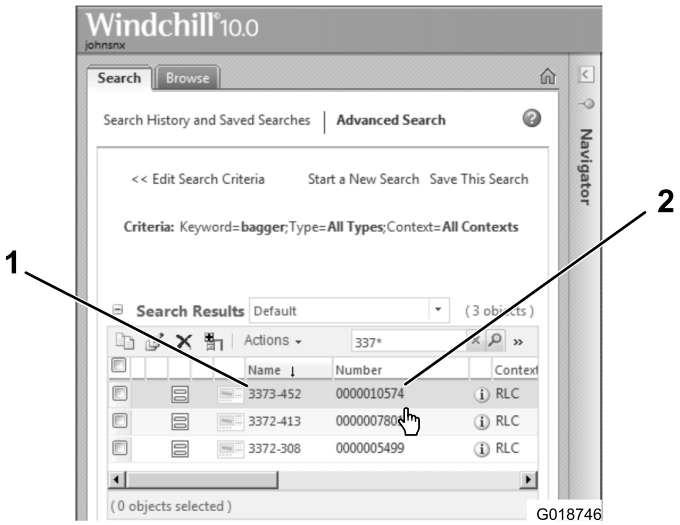

Figure 46

1. Oil fill hole
2. Dipstick
3. Oil-level upper limit
4. Oil-level lower limit

2. Replace and secure the dipstick.
3. Wipe up any spilled oil.

Servicing the Spark Plug

Service Interval: Every 100 hours/Every 6 months (whichever comes first)—Check the spark plug.

Every 300 hours/Yearly (whichever comes first)—Replace the spark plug.

Type: NGK BPR6ES or equivalent

Gap: 0.7 to 0.8 mm (0.028 to 0.031 inch)

Note: Use a 13/16 inch (21 mm) spark-plug wrench for removing and installing the spark plug.

Removing the Spark Plug

1. Park the machine on a level surface and turn off the engine; refer to Stopping the Engine (page 24).
2. Ensure that the machine surfaces are cool.
3. Pull the spark-plug wire off the terminal of the spark plug (Figure 47).

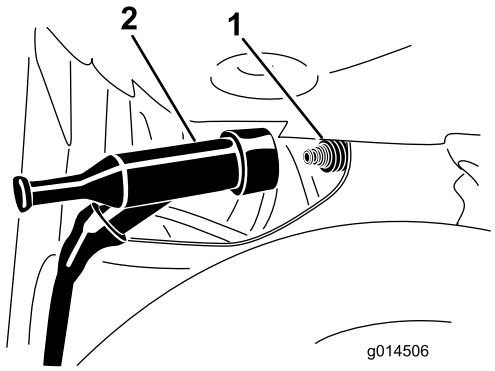

Figure 47

1. Spark plug
2. Wire

4. Clean around the spark plug.
5. Rotate the spark plug counterclockwise using a 13/16 inch (21 mm) spark-plug wrench to remove the plug and the sealing washer (Figure 48).

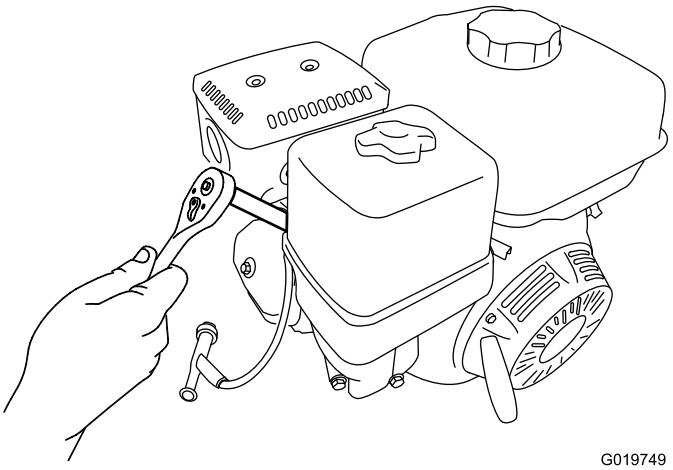

Figure 48

Checking the Spark Plug

Note: Use a gapping tool/feeler gauge to check and adjust the gap. Install a new spark plug if necessary.

1. Look at the center of the spark plug (Figure 49). If you see light brown or gray on the insulator, the engine is operating properly.

   Important: Never clean the spark plug. Always replace the spark plug when it has a black coating, worn electrodes, an oily film, or cracks.

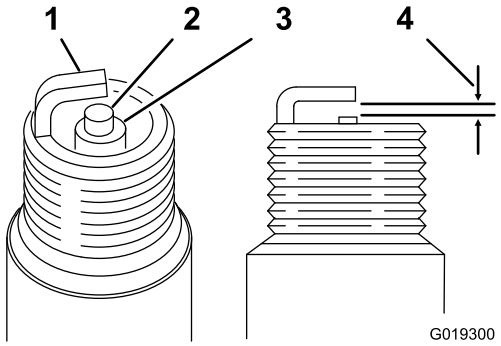

Figure 49

1. Side electrode
2. Center electrode
3. Insulator
4. 0.7 to 0.8 mm (0.028 to 0.031 inch) gap

2. Use a gapping tool for spark plugs or a feeler gauge to measure the gap between the side electrode and center electrode (Figure 49).
3. If the gap is not within the specified range, do the following:
   A. If the gap is **too small**, carefully bend the side electrode **away** from the center electrode until the gap between the electrodes is 0.7 to 0.8 mm (0.028 to 0.031 inch).
   B. If the gap is **too large**, carefully bend the side electrode **toward** the center electrode until the gap between the electrodes is 0.7 to 0.8 mm (0.028 to 0.031 inch).

Installing the Spark Plug

Important: Ensure that the gap between the side and center electrodes is correct before installing the spark plug.

1. Thread the spark plug clockwise into the spark-plug hole by hand.

   Note: Avoid cross-threading the spark plug with the threads of the spark-plug hole.

2. Rotate the spark plug clockwise using a 13/16 inch (21 mm) spark-plug wrench until the plug and sealing washer are seated (Figure 48).
3. Tighten the spark plug as follows:
   - When installing an **in-service** spark plug, tighten the plug an additional 1/8 to 1/4 turn.
   - When installing a **new** spark plug, tighten the plug an additional 1/2 turn.
4. Push the spark-plug wire onto the terminal of the spark plug (Figure 47).

Servicing the Spark Arrester

Cleaning the Spark Arrester

Service Interval: Every 100 hours

Note: A spark arrester is available as an option. If you require a spark arrester, contact your Authorized Toro Service Dealer.

Genuine Toro spark arresters are approved by the USDA Forestry Service.

⚠ WARNING

If the engine has been running, the muffler will be hot.

1. Remove the divider plate; refer to Removing the Divider Plate (page 28).
2. Remove the 2 nuts (8 mm) and remove the muffler from the cylinder (Figure 50).

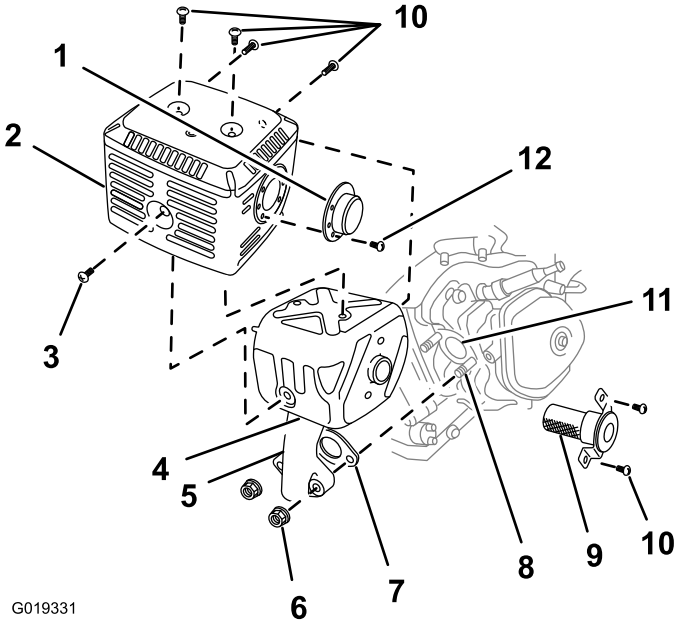

Figure 50

1. Deflector (if applicable)	5. Exhaust pipe	9. Spark arrester
2. Protector	6. Nut, 8 mm (2)	10. Screws (5 mm)
3. Screw (6 mm)	7. Gasket	11. Exhaust port
4. Muffler	8. Bolt (8 mm)	12. Screw (4 mm)

3. Remove the 3 screws (4 mm) from the exhaust deflector and remove the deflector (Figure 50).
4. Remove the screws (5 mm and 6 mm) from the muffler protector, and remove the muffler protector (Figure 50).
5. Remove the screw (4 mm) from the spark arrester and remove the spark arrester from the muffler (Figure 50).
6. Use a brush to carefully remove carbon deposits from the spark-arrester screen (Figure 51).

Note: Replace the spark arrester if it has breaks or holes.

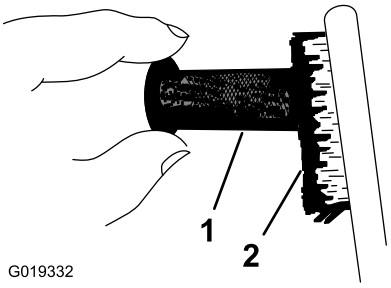

Figure 51

1. Screen
2. Brush

7. Install the spark arrester, muffler protector, exhaust deflector, and muffler in the reverse order of disassembly.
8. Install the divider plate; refer to Installing the Divider Plate (page 28).

Fuel System Maintenance

Servicing the Fuel System

Cleaning the Sediment Cup

Service Interval: Every 100 hours/Every 6 months (whichever comes first)—Clean the sediment cup.

Yearly or before storage—Clean the fuel sediment cup.

Underneath the fuel valve is a sediment cup to catch dirt in the fuel.

1. Park the machine on a level surface and stop the engine; refer to Stopping the Engine (page 24).
2. Ensure that the engine and the exhaust system surfaces are cool.
3. Move the lever of the fuel valve to the Off position, all the way to the left (Figure 52).
4. Unscrew the sediment cup (Figure 52).
5. Remove the fuel filter and O-ring (Figure 52).

   Note: Do not misplace the O-ring.

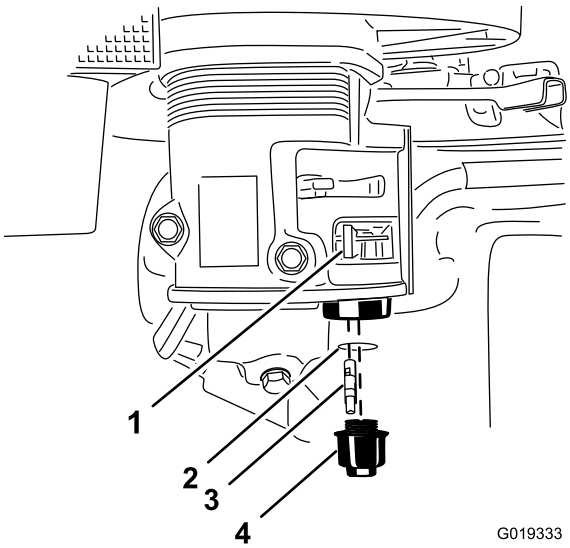

Figure 52

1. Fuel valve (Off)
2. O-ring
3. Fuel filter
4. Sediment cup

Note: Do not clean the O-ring in solvent.

6. Clean the fuel filter and sediment cup using a nonflammable solvent, and dry it carefully.
7. Wipe the O-ring with a clean, dry cloth.
8. Install the fuel filter in the bottom of the carburetor (Figure 52).
9. Align the O-ring in to the groove in the sediment cup and install the sediment cup to fuel valve housing.
10. Move the lever of the fuel valve to the On position (all the way to the right) and check for leaks. If it leaks, replace the O-ring.

Belt Maintenance

Servicing the Drive Belts

Service Interval: Every 20 hours—Inspect the drive-belt tension and adjust it as necessary. Replace the drive belts if they show any signs of wear, cracks, glazing, or damage.

Checking the Drive-belt Tension

The drive belts should each have 1 cm (13/32 inch) of flex when applying 6.8 kg (15 lb) of pressure, at mid-span (Figure 53).

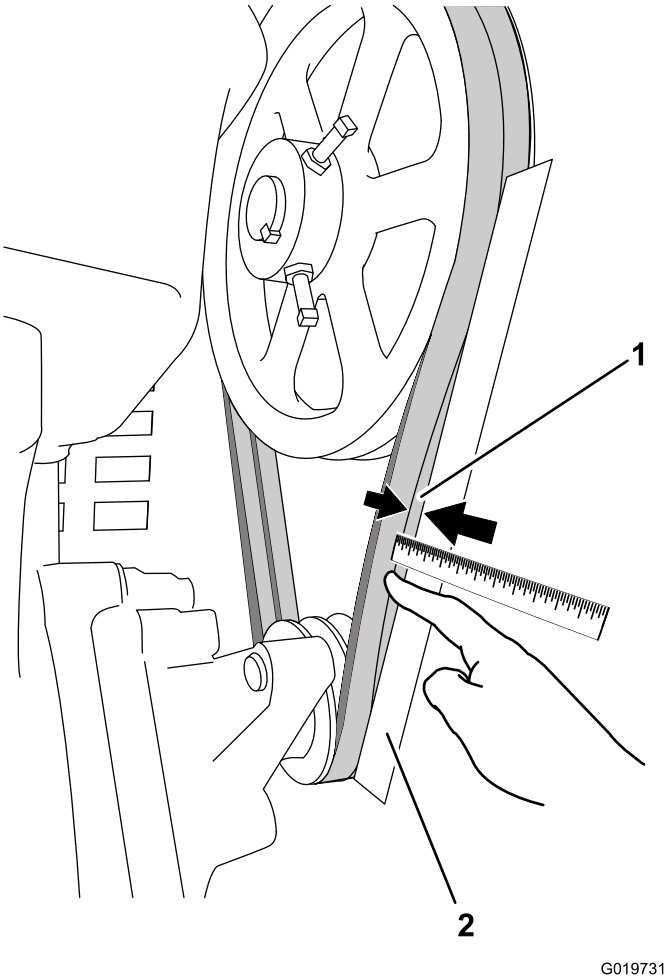

Figure 53
Drive Belts

1. Flex of 1 cm (13/32 inch) 2. Straightedge

1. Remove the divider plate; refer to Removing the Divider Plate (page 28).
2. Lay a straightedge along one of the drive belts, from one pulley to the other (Figure 53).
3. With your finger, push on the belt with 6.8 kg (15 lb) of pressure, midway between the pulleys (Figure 53).
4. Measure the distance from the belt to the straightedge. The distance should be approximately 1 cm (13/32 inch); refer to Figure 53. If the belt tension needs adjustment, refer to Adjusting the Drive-belt Tension (page 35).
5. Install the divider plate; refer to Installing the Divider Plate (page 28).

Adjusting the Drive-belt Tension

1. Stop the engine and wait for all moving parts to stop.
2. Remove the divider plate; refer to Removing the Divider Plate (page 28).
3. Loosen the 4 nuts and bolts that secure the engine to the engine mounting plate (Figure 54).

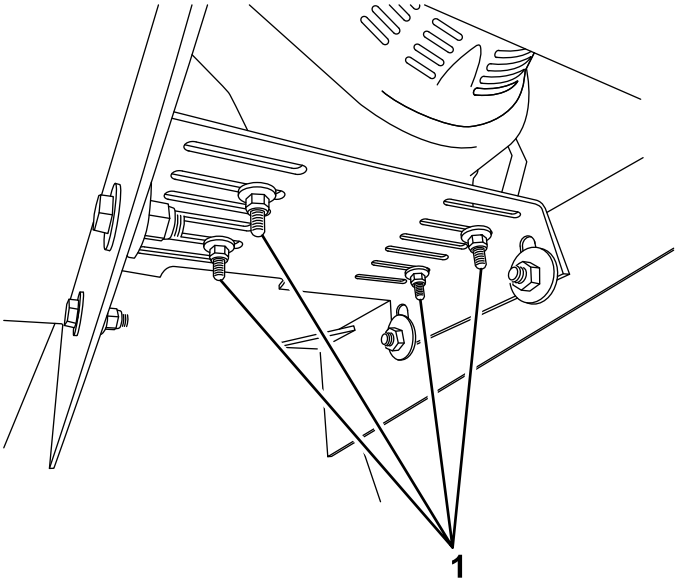

Figure 54

1. Engine mounting nuts and bolts (4 each)

4. Slide the engine left to increase tension on the drive belt or right to decrease tension.
5. Check the drive-belt tension; refer to Checking the Drive-belt Tension (page 35).

   Note: When the belts have the appropriate amount of tension, torque the 4 nuts and bolts to 24 N-m (18 ft-lb) each.
6. Install the divider plate; refer to Installing the Divider Plate (page 28).

Replacing the Drive Belts

Service Interval: Every 100 hours

Note: The machine has 2 drive belts. Remember to buy 2 belts for replacement.

1. Complete steps 1 through 3 in Adjusting the Drive-belt Tension (page 35).
2. Slide the engine to the right to decrease the belt tension.
3. Remove the drive belts from the pulleys.
4. Install the new drive belts on the pulleys.
5. Slide the engine to the left until the belts have the right amount of tension; refer to Checking the Drive-belt Tension (page 35).
6. Torque the 4 mounting nuts and bolts to 24 N-m (18 ft-lb) each (Figure 54).
7. Install the divider plate; refer to Installing the Divider Plate (page 28).

Cleaning

Cleaning the Machine

Regular cleaning and washing with mild detergent and water will increase the life span of the machine. Clean the machine after each use before the dirt hardens.

Remove dirt and grime from the external parts of the entire machine, especially the engine. Clean dirt and concrete materials from the outside of the engine.

Ensure that the fuel cap and the oil-fill cap/dipstick are secure to avoid getting water in the engine.

Use care when using a high-pressure sprayer because it can damage safety decals, instruction signs, and the engine.

Storage

Storing the Machine

For storage over 30 days, prepare the machine as follows:

1. Remove dirt and grime from the external parts of the entire machine, especially the engine. Clean dirt and debris from the outside of the engine cylinder-head fins and blower housing.

   Important: You can wash the machine with mild detergent and water.

2. Condition the fuel system as follows:

   A. Add a petroleum-based stabilizer/conditioner to fuel in the tank. Follow the mixing instructions from the stabilizer manufacturer. **Do not** use an alcohol-based stabilizer (ethanol or methanol).

   Important: Do not store stabilizer/conditioned fuel over 90 days.

   Note: Fuel stabilizer/conditioner is most effective when mixed with fresh fuel and used at all times.

   B. Run the engine for 5 minutes to distribute the conditioned fuel through the fuel system.

   C. Stop the engine, allow it to cool, and drain the fuel tank using a pump-type siphon. Dispose of fuel properly; recycle it according to local codes.

   D. Start the engine and run it until it stops.

   E. Choke the engine.

   F. Start and run the engine until it will not start again.

3. Clean the sediment cup; refer to Cleaning the Sediment Cup (page 34).

4. Service the air cleaner; refer to Servicing the Air Cleaner (page 29).

5. Change the engine crankcase oil; refer to Changing the Engine Oil (page 30).

6. Remove the spark plug and check the condition; refer to Servicing the Spark Plug (page 31).

7. Condition the engine as follows:

   A. Remove the spark plug and pour 2 tablespoons of engine oil into the spark-plug hole; refer to Servicing the Spark Plug (page 31).

   B. Pull the recoil-start handle slowly to crank the engine and distribute the oil inside the cylinder.

   C. Install the spark plug; refer to Servicing the Spark Plug (page 31).

   Note: Do not install the wire on the spark plug.

8. Grease the machine; refer to Lubricating the Machine (page 29).

9. Check and tighten all bolts, nuts, and screws. Repair or replace any part that is damaged.

10. Paint all scratched or bare metal surfaces with paint available from your Authorized Toro Dealer.

11. Store the machine in a clean, dry garage or storage area.

12. Cover the machine to protect it and keep it clean.

Troubleshooting

Problem	Possible Cause	Corrective Action
The engine will not start.	1. The engine switch on the cowl is in the Stop position.	1. Press the engine switch to the Run position.
	2. The fuel valve is in the Off position.	2. Move the fuel-valve lever to the On position.
	3. The choke is open.	3. Close the choke when starting a cold engine.
	4. The choke is closed.	4. Open the choke when starting a hot engine.
	5. The On/Off switch on the engine is in the Off position.	5. Rotate the switch to the On position.
	6. The engine oil level is low.	6. Fill the engine to the proper level with the recommended oil.
	7. The fuel tank is empty.	7. Fill the tank with fresh fuel.
	8. The spark-plug wire is loose or disconnected.	8. Connect the spark-plug wire.
	9. The spark plug is fouled or improperly gapped.	9. Gap or replace the spark plug.
	10. The spark plug is wet with fuel (flooded engine).	10. Remove the spark plug, dry it, and install the plug. Start the engine with the throttle in the Max position.
	11. The fuel is old or bad.	11. Drain the fuel tank and carburetor. Fill the fuel tank with fresh fuel.
The engine runs rough.	1. The choke is left on.	1. Open the choke.
	2. The air filter is clogged.	2. Clean or replace the air filter.
	3. The fuel line is clogged.	3. Clean the sediment cup.
	4. There is water or contaminants in the fuel.	4. Drain and fill the tank with fresh fuel.
	5. The spark plug is worn or has buildup on the electrodes.	5. Check the electrode gap or replace the spark plug.
	6. There is too much oil in the engine crankcase.	6. Drain the oil to the proper level.
The drive belts are worn or burned, or they jump off of the pulley.	1. The drive-belt tension needs adjustment.	1. Adjust the drive-belt tension.
	2. The drive belts may be stretched.	2. Replace the drive belts.
	3. The pulleys are out of alignment.	3. Contact your Authorized Service Dealer.
The drum does not turn.	1. The belts are loose or damaged.	1. Check the drive belts.
The drum does not tilt.	1. The drum-tilt brake is engaged.	1. Disengage the drum-tilt brake.
The drum chatters or turns erratically.	1. Teeth are missing from the gears.	1. Contact your Authorized Service Dealer.
	2. The gears are misaligned.	2. Contact your Authorized Service Dealer.
The machine vibrates excessively.	1. There is debris in the drum.	1. Remove the debris.
	2. The mixing paddles are damaged.	2. Contact your Authorized Service Dealer.

Notes:

The Toro Warranty

A limited warranty (see warranty periods below)

Concrete, Masonry, and Compaction Equipment

Conditions and Products Covered

The Toro Company and its affiliate, Toro Warranty Company, pursuant to an agreement between them, jointly warrant your Toro Concrete, Masonry, and Compaction Equipment Products listed below to be free from defects in materials or workmanship.

This warranty covers the cost of parts and labor, but you must pay transportation costs.

The following time periods apply from the date of purchase:

Products	Warranty Period
Concrete Mixers	1 year
・Spindle Bearings	Lifetime* (original owner only)
Mortar Mixers	1 year
・Drum Bearings and Seals	Lifetime* (original owner only)
Forward Plate Compactors	2 years
Reversible Plates	1 year
Rammer Compactors	2 years
Mud Buggy	1 year
Vibrating Trench Roller	2 years
Concrete Saws	1 year
Masonry Saws	1 year
Power Trowels	1 year
Screeds	1 year
Concrete Vibrators	1 year

Where a warrantable condition exists, we will repair the Product at no cost to you including diagnosis, labor, and parts.

*Lifetime Warranty - If the bearing(s) or seal(s) on your mixer fail, it will be replaced under warranty, at no cost for parts or labor.

Instructions for Obtaining Warranty Service

If you think that your Toro Product contains a defect in materials or workmanship, follow this procedure**:

1. Contact any Authorized Servicing Outlet to arrange service at their dealership. To locate one convenient to you, access our website at www.Toro.com. Select “Where to Buy” and select “Contractor” under product type. You may also call our toll free number below.
2. Bring the product and your proof of purchase (sales receipt) to them.
3. If for any reason you are dissatisfied with the Service Outlet’s analysis or with the assistance provided, contact us at:

   SWS Customer Care Department
   Toro Warranty Company
   8111 Lyndale Avenue South
   Bloomington, MN 55420-1196
   Toll Free: 800-888-9926

**Toro Authorized Rental Customers who have purchased products directly from Toro and have signed the Toro Rental Customer Agreement have the ability to perform their own warranty work. Please visit Toro’s Rental Portal for electronic warranty clam filing procedures or call the toll free number above.

Owner Responsibilities

You must maintain your Toro Product by following the maintenance procedures described in the *Operator’s Manual*. Such routine maintenance, whether performed by a dealer or by you, is at your expense. Parts scheduled for replacement as required maintenance (“Maintenance Parts”), are warranted for the period of time up to the scheduled replacement time for that part. Failure to perform required maintenance and adjustments can be grounds for disallowing a warranty claim.

Items and Conditions Not Covered

Not all product failures or malfunctions that occur during the warranty period are defects in materials or workmanship. This express warranty does not cover the following:

- Product failures which result from the use of non-Toro replacement parts, or from installation and use of add-on, modified, or unapproved accessories
- Product failures which result from failure to perform required maintenance and/or adjustments
- Product failures which result from operating the Product in an abusive, negligent or reckless manner
- Parts subject to consumption through use unless found to be defective. Examples of parts which are consumed, or used up, during normal product operation include, but are not limited to, belts, wipers, spark plugs, tires, filters, gaskets, wear plates, seals, O-rings, drive chains, clutches.
- Failures caused by outside influence. Items considered to be outside influence include, but are not limited to, weather, storage practices, contamination, use of unapproved coolants, lubricants, additives, or chemicals, etc.
- Normal “wear and tear” items. Normal “wear and tear” includes, but is not limited to, worn painted surfaces, scratched decals, etc.
- Any component covered by a separate manufacturer’s warranty
- Pickup and delivery charges

General Conditions

Repair by an Authorized Servicing Outlet or Self-Service as an Authorized Rental Customer is your sole remedy under the warranty.

Neither The Toro Company nor Toro Warranty Company is liable for indirect, incidental or consequential damages in connection with the use of the Toro Products covered by this warranty, including any cost or expense of providing substitute equipment or service during reasonable periods of malfunction or non-use pending completion of repairs under this warranty. All implied warranties of merchantability and fitness for use are limited to the duration of this express warranty. Some states do not allow exclusions of incidental or consequential damages, or limitations on how long an implied warranty lasts, so the above exclusions and limitations may not apply to you.

This warranty gives you specific legal rights, and you may also have other rights which vary from state to state.

Except for the engine warranty coverage and the Emissions warranty referenced below, if applicable, there is no other express warranty. The Emissions Control System on your Product may be covered by a separate warranty meeting requirements established by the U.S. Environmental Protection Agency (EPA) or the California Air Resources Board (CARB). Refer to the California Emission Control Warranty Statement supplied with your Product or contained in the engine manufacturer’s documentation for details.

Countries Other than the United States or Canada

Customers who have purchased Toro products outside the United States or Canada should contact their Toro Distributor (Dealer) to obtain guarantee policies for your country, province, or state. If for any reason you are dissatisfied with your Distributor's service or have difficulty obtaining guarantee information, contact the Toro importer. If all other remedies fail, you may contact us at Toro Warranty Company.

Australian Consumer Law: Australian customers will find details relating to the Australian Consumer Law either inside the box or at your local Toro Dealer.