Form No. 3378-862 Rev A

TORO®

Count on it.

Operator's Manual

CM-250E-PC and CM-250E-PWB Concrete Mixer

Model No. 68001—Serial No. 313000001 and Up
Model No. 68003—Serial No. 313000001 and Up

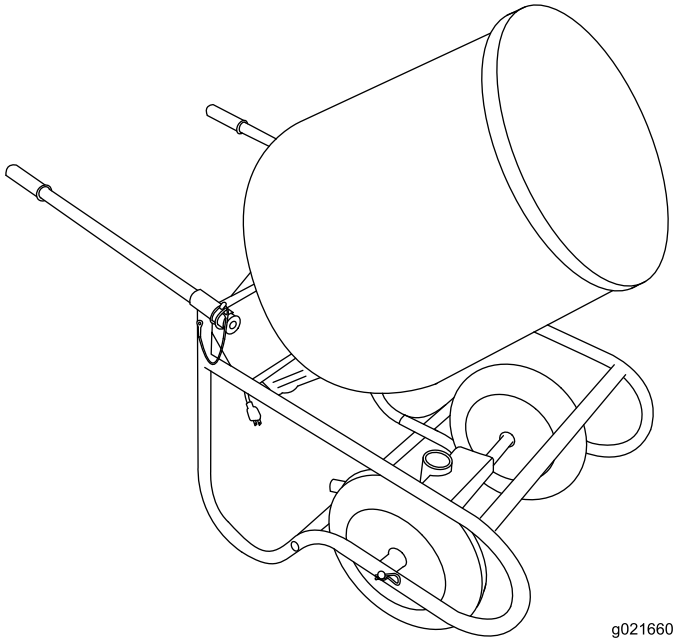

g021660

Register at www.Toro.com.
Original Instructions (EN)

3378-862 A

WARNING

CALIFORNIA
Proposition 65 Warning

This product contains a chemical or chemicals known to the State of California to cause cancer, birth defects, or reproductive harm.

Use of this product may cause exposure to chemicals known to the State of California to cause cancer, birth defects, or other reproductive harm.

Introduction

This machine is designed to mix concrete products.

Read this information carefully to learn how to operate and maintain your product properly and to avoid injury and product damage. You are responsible for operating the product properly and safely.

You may contact Toro directly at www.Toro.com for product and accessory information, help finding a dealer, or to register your product.

Whenever you need service, genuine Toro parts, or additional information, contact an Authorized Service Dealer or Toro Customer Service and have the model and serial numbers of your product ready. Figure 1 illustrates the location of the model and serial numbers on the product. Write the numbers in the space provided.

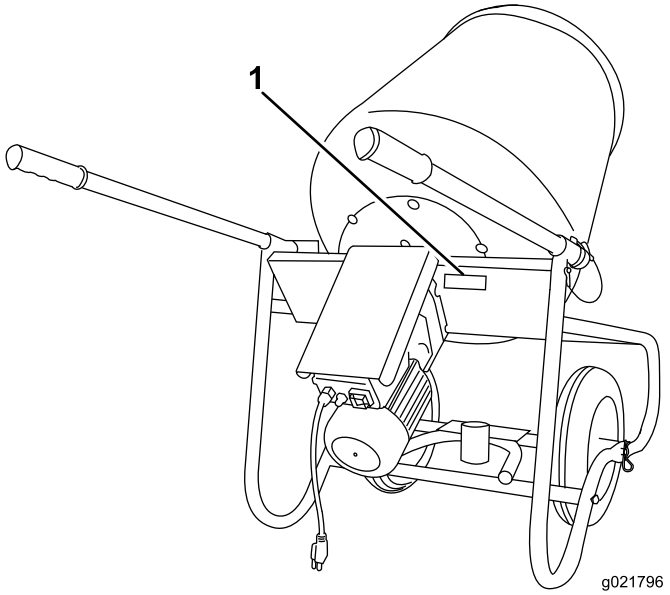

Figure 1

1. Model and serial number plate

Model No. _____

Serial No. _____

This manual identifies potential hazards and has safety messages identified by the safety alert symbol (Figure 2) Which signals a hazard that may cause serious injury or death if you do not follow the recommended precautions.



Figure 2

1. Safety alert symbol

This manual uses 2 words to highlight information. **Important** calls attention to special mechanical information and **Note** emphasizes general information worthy of special attention.

© 2013—The Toro® Company
8111 Lyndale Avenue South
Bloomington, MN 55420

Contact us at www.Toro.com.
Printed in the USA.
All Rights Reserved

Contents

Safety 3
Safe Operating Practices 3
Safety and Instructional Decals 5
Setup 6
1 Installing the Wheels and Axle 6
2 Installing the Frame Stop 6
3 Installing the Motor 6
4 Installing the Drum 7
5 Installing the Motor Cover 8
6 Installing the Handlebars 8
Product Overview 9
Controls 9
Specifications 9
Operation 10
Operating the Machine 10
Electrical Power 10
Starting and Stopping the Motor 11
Using the Pedestal 11
Mixing the Material 13
Maintenance 14
Recommended Maintenance Schedule(s) 14
Lubrication 14
Oil the Gearbox 14
Cleaning 14
..... 14
Storage 15
..... 15
Troubleshooting 16

Safety

Improper use or maintenance of the machine can result in injury. To reduce the potential for injury, comply with these safety instructions and always pay attention to the safety alert symbol ⚠, which means: *Caution*, *Warning*, or *Danger*—personal safety instruction. Failure to comply with the instruction may result in personal injury or death.

⚠ WARNING

Machining or handling stone, masonry, concrete, metal, and other materials can generate dust, mists, and fumes containing chemicals, such as silica, known to cause serious or fatal injury or illness, such as respiratory disease, silicosis, cancer, birth defects, or other reproductive harm.

- **Control dust, mist, and fumes at the source where possible. Use water for dust suppression when feasible.**
- **Use good work practices and follow the recommendations of the manufacturer or suppliers, OSHA, and other occupational and trade associations.**
- **Always follow respiratory precautions.**
- **When the hazards from inhalation cannot be eliminated, the operator and any bystanders should wear a respirator approved by OSHA for the material being handled.**

Safe Operating Practices

This product is capable of amputating hands and feet. Always follow all safety instructions to avoid serious injury or death.

Training

- Read the *Operator's Manual* and other training material. If the operator(s) or mechanic(s) cannot read English, it is the owner's responsibility to explain this material to them.
- Become familiar with the safe operation of the equipment, operator controls, and safety signs.
- All operators and mechanics should be trained. The owner is responsible for training the users.
- Never let children or untrained people operate or service the equipment. Local regulations may restrict the age of the operator.
- The owner/user can prevent and is responsible for accidents or injuries to people, or damage to property.

Preparation

- Wear appropriate clothing including hard hat, face shield, safety glasses, long pants, safety shoes, and hearing

protection. Long hair, loose clothing, or jewelry may get tangled in moving parts.

- Whenever possible, use circuits or receptacles protected with a Ground Fault Circuit Interrupter (GFCI) device.
- Inspect the electrical cords for damage. Replace the damaged cord before operating the machine.
- Inspect the electrical plug and sockets for damage. Replace the damaged electrical connector(s) before operating the machine.
- Keep electrical connectors off the ground and dry.

Operation

- Only operate in good light, keeping away from holes and hidden hazards.
- Ensure that you operate the machine in areas where there are no obstacles in close proximity to the operator. Failure to maintain adequate distance from trees, walls, and other barriers may result in injury during operation if the operator is not attentive to the surroundings. Operate the machine in areas where there is sufficient clearance for the operator to safely maneuver the machine.
- Keep hands and feet away from the moving parts.
- Use care when loading or unloading the machine into a trailer or truck.
- Never leave a running machine unattended.
- Before working on the mixer, stop the motor and unplug the machine.
- Do not touch parts which may be hot from operation. Allow them to cool before attempting to maintain, adjust, or service.
- Locate the pinch point areas on the machine and keep hands and feet away from these areas.
- Do not operate the machine at a voltage other than the voltage specified on the data plate of the motor.
- Do not operate the machine in standing water.
- Do not operate the machine in the rain.
- Do not use with damaged cord or plug. If machine is not working as it should, has been dropped, damaged, left outdoors, or dropped into water, return it to a service dealer.
- Do not pull or carry by cord, use cord as handle, close a door on cord, or pull cord around sharp edge or corners. Keep cord away from heated surfaces.
- Do not unplug by pulling on cord. To unplug, grasp the plug, not the cord.
- Do not handle plug or appliance with wet hands.
- Turn off all controls before unplugging.
- Use only a 3-wire extension cords with terminals and sockets for the live, neutral, and ground circuits.
- Connect the machine only to a 3-pole receptacle with live, neutral, and ground circuits.
- When using an extension cord and an in-line Ground Fault Circuit Interrupter (GFCI) device, install the GFCI device as close to the electrical source as possible.
- Ensure that the On/Off switch is rotated to the Off position before connecting the machine to the electrical source.
- The motor and motor shroud may be hot. Allow to cool before preforming any service work.
- Lightning can cause severe injury or death. If lightning is seen or thunder is heard in the area, do not operate the machine; seek shelter.

Maintenance and Storage

- Stop the motor. Wait for all movement to stop before adjusting, cleaning, or repairing.
- Unplug the machine before making any repairs.
- Clean debris from the gears, drives, drum, and motor.
- Let the motor cool before storing.
- Never service or adjust machine while it is moving.
- Always set the machine on level ground.
- Never allow untrained personnel to service the machine.
- Do not modify the electrical connectors or wiring.
- Do not connect the ground circuit of the machine to the energized circuit of the electrical source.
- Keep hands and feet away from moving parts.
- Keep all parts in good working condition and all hardware tightened. Replace all worn or damaged decals.
- Securely support any machine elements that must be raised for service work.
- Keep nuts and bolts tight. Keep equipment in good condition.
- Never tamper with safety devices.
- Stop and inspect the equipment if the machine unexpectedly stops. Make necessary repairs before restarting.
- Dispose of waste properly. Improperly disposed waste can threaten the environment.
- Store the machine indoors.
- Use only genuine Toro replacement parts to ensure that original standards are maintained.

Safety and Instructional Decals

Safety decals and instructions are easily visible to the operator and are located near any area of potential danger. Replace any decal that is damaged or lost.

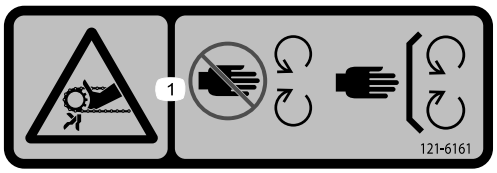

121–6161

1. Entanglement hazard, belt—keep hands away from moving parts; keep all guards and safeties in place.

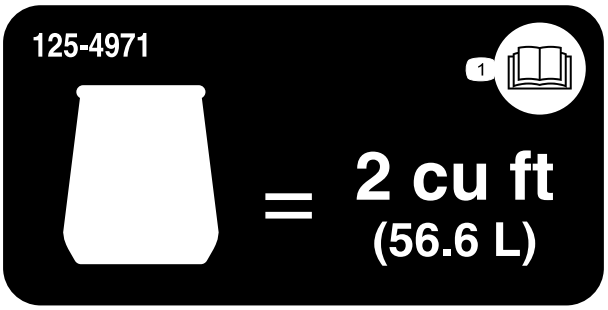

125–4971

1. Read the *Operator's Manual*.

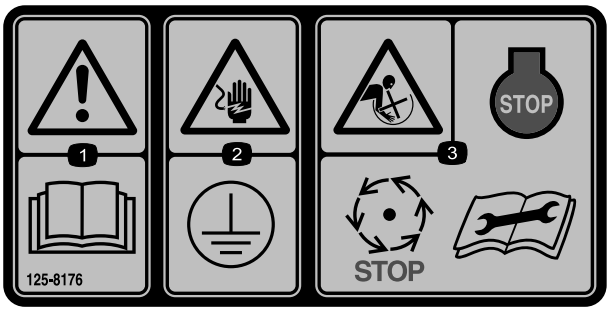

125–8176

1. Warning—read the *Operator's Manual*.
2. Electric shock hazard—properly ground equipment before use.
3. Entanglement, severing hazard—stop the engine and wait for all moving parts to stop before performing maintenance on the machine.

Setup

1

Installing the Wheels and Axle

Parts needed for this procedure:

2	Cotter pin
1	Axle rod
1	Pivot mount plate
2	Washer
2	Wheel

Procedure

Note: The pivot mount plate is included with pedestal model (68001). A spacer axle is used on the wheelbarrow only model (68003).

1. Slide the axle rod into the frame of the machine; refer to Figure 3.

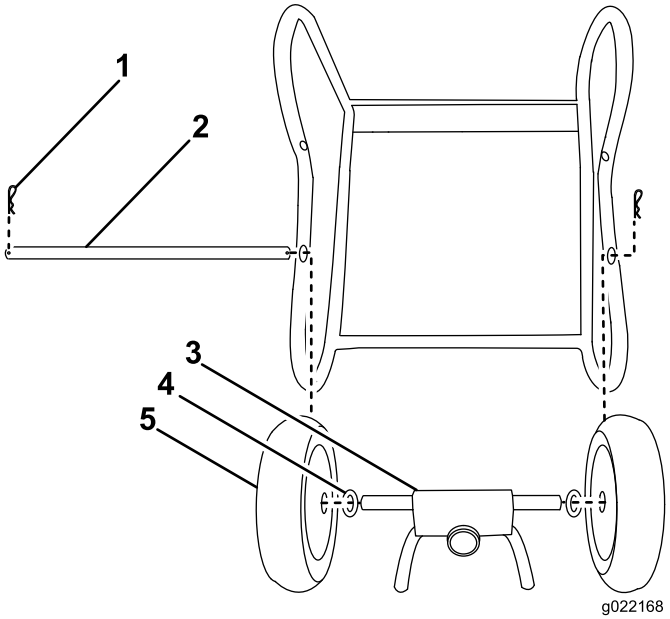

Figure 3

1. Cotter pin
2. Axle rod
3. Pivot mount plate
4. Washer
5. Wheel

2. Slide the axle rod, wheels, washers, and pivot mount plate into place; refer to Figure 3.

   Note: The wheels should have the side with the grease fittings facing outward.

   Note: If you are not using the pedestal, you may use a spacer axle piece instead of the pivot mount plate.

3. Secure the wheels and axle rod in place with cotter pins; refer to Figure 3.

2

Installing the Frame Stop

Parts needed for this procedure:

2	Bolts
1	Frame stop

Procedure

Note: The frame stop is included only with the pedestal (model 68001).

Install the frame stop; refer to Figure 4.

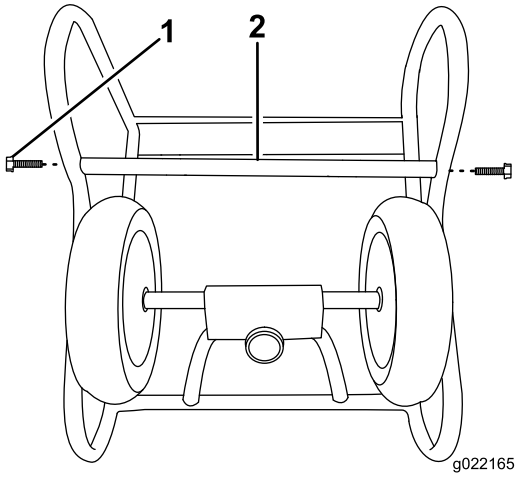

Figure 4

1. Bolt
2. Frame stop

3

Installing the Motor

Parts needed for this procedure:

1	Electric Motor
4	Nut
4	Washer
4	Lock Washer

Procedure

1. Move the motor into position on the frame of the machine; refer to Figure 5.

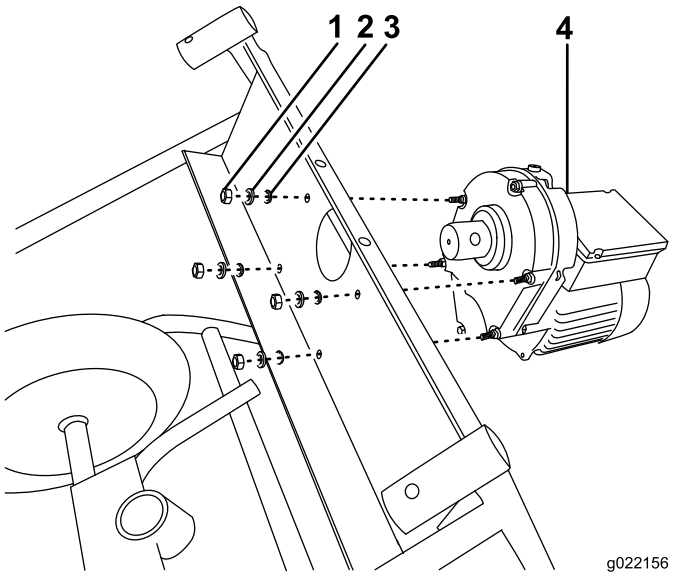

Figure 5

1. Nut
2. Lock washer
3. Washer
4. Motor

2. Secure the motor onto the machine with nuts, washers, and lock washers; refer to Figure 5.

4

Installing the Drum

Parts needed for this procedure:

1	Drum
1	Bolt
1	Nut

Procedure

1. Move the drum into place; refer to Figure 6.

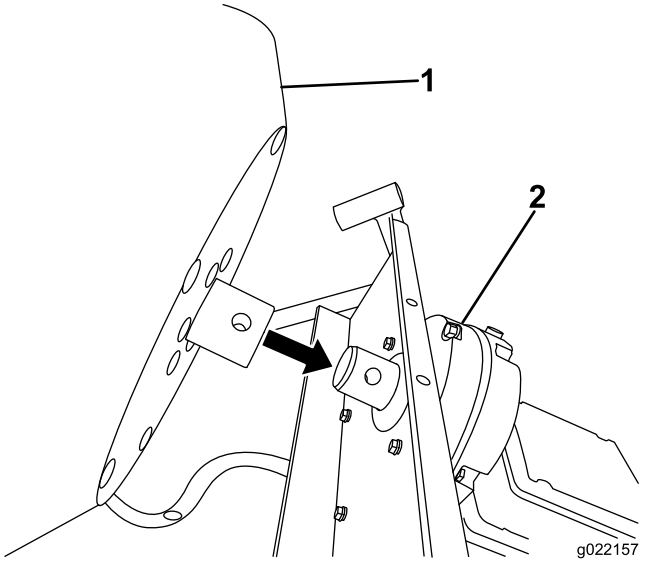

Figure 6

1. Drum
2. Motor

2. Connect the drum to the motor with the bolt and nut. Refer to Figure 7.

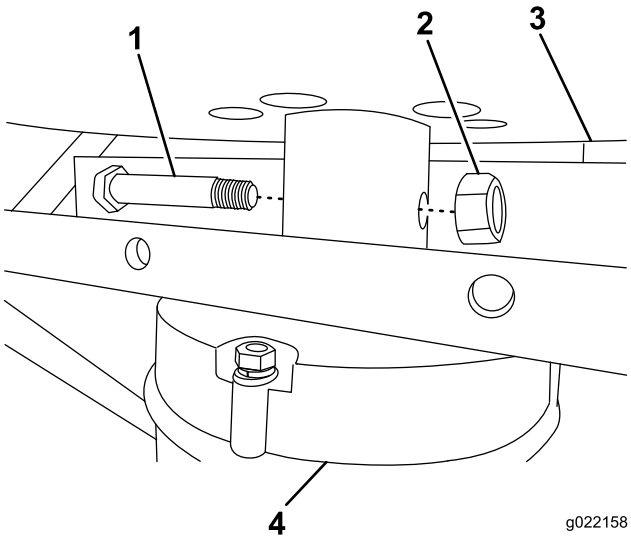

Figure 7

1. Bolt
2. Nut
3. Drum
4. Motor

5

Installing the Motor Cover

Parts needed for this procedure:

1	Motor cover
2	Bolt
2	Nut

Procedure

Fasten motor cover to the frame of the machine; refer to Figure 8.

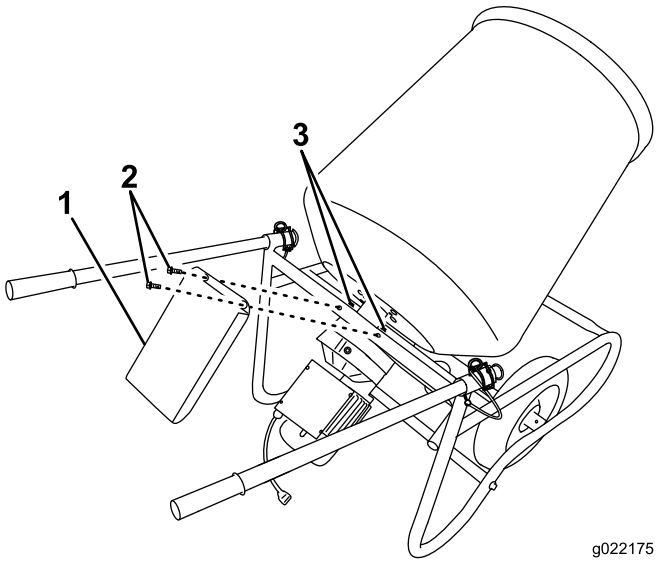

Figure 8

1. Motor cover
2. Bolts
3. Nuts

6

Installing the Handlebars

Parts needed for this procedure:

2	Handlebar
2	Handlebar Grips

Procedure

1. Slide handlebars into place, and secure them using the locking pin (Figure 9).

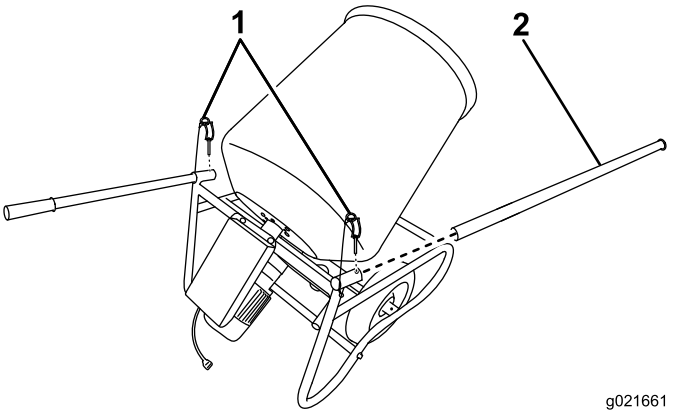

Figure 9

1. Locking pin
2. Handlebar

2. Slide the rubber hand grips into place.

Product Overview

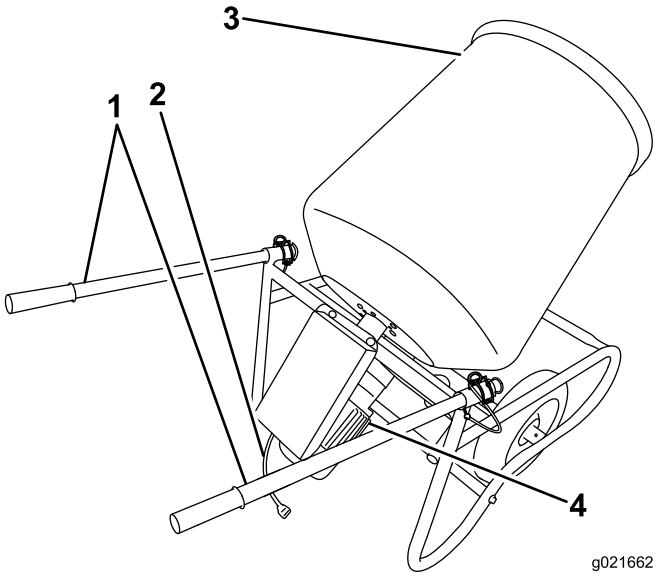

Figure 10

1. Dump handles
2. Power cord
3. Drum
4. Electric motor

Controls

Motor Controls

Become familiar with all the controls before you start the motor and operate the machine.

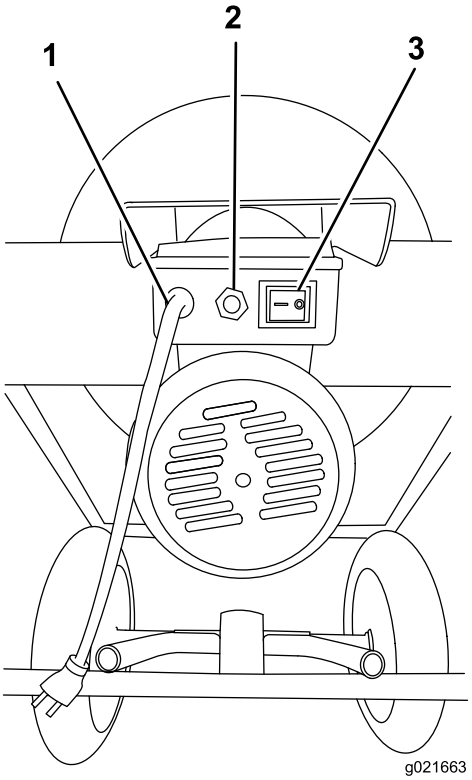

Figure 11

1. Power cord
2. Reset button
3. On/Off switch

Specifications

Note: Specifications and design are subject to change without notice.

Capacity: Concrete Volume Total (wet)	56.6 L (2 cu ft)
Length	127 cm (50 inches)
Width	61.6 cm (24.25 inches)
Height	101.6 cm (40 inches)
Weight	55.79 Kg (123 lbs)
Motor	0.5 HP; 110–120 volt; 5.3 amperes; 60 Hz

Operation

Important: Before operating, remove debris from the machine. Also, ensure that the area is clear of people and debris.

Operating the Machine

- Review all of the safety decals.
- Use a hard-hat, and eye protection. A mesh visor alone does not provide sufficient eye protection; supplement it with protective glasses.
- Ensure that you are familiar with the safety regulations and shutdown procedures described in this manual.
- Ensure that everyone, including children and animals, maintain a distance of at least 15 m (50 feet) from the machine.

Electrical Power

Connecting to a Power Source

⚠ DANGER

Contact with water while operating the product could cause electric shock, causing injury or death.

- **Don't handle the plug or the machine with wet hands or while standing in water.**
- **Use only an extension cord recommended for outdoor use.**

Note: Connect the power cord to the extension cord as shown in Figure 12.

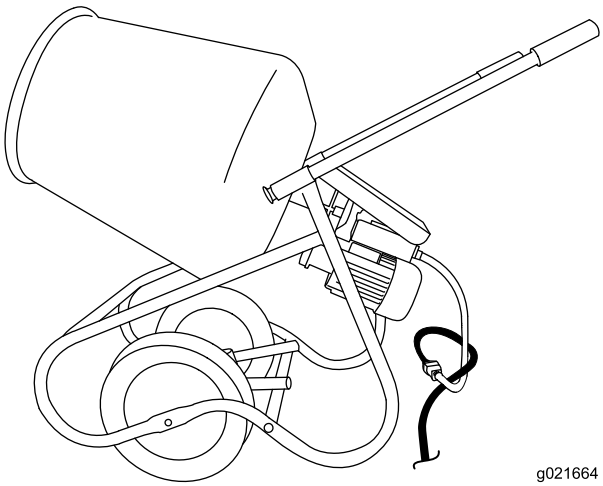

Figure 12

Important: Check the extension cord frequently during use for holes or cracks in the insulation. Do not use a damaged cord. Do not run the cord through standing water or wet grass.

Important: Use only 3-wire extension cords with terminals and sockets for the live, neutral, and ground circuits.

Important: Only connect the machine to a 3-pole receptacle with live, neutral, and ground circuits.

Important: The connecting wires or extension cord should be as short as possible and in one piece.

Important: Only plug the machine into 115 single phase, 60–cycle, fused outlets.

Important: Do not use an extension cord over 30.4 m (100 ft) long.

Important: Only use power cords that are rated for outdoor use.

Important: Only use power cords that are rated for the motor load of the machine.

To reduce the risk of electric shock, this machine has polarized plugs (i.e., unique blade shapes and widths). Use only a polarized plug and socket that is compliant with NEMA specifications and extension cords that are UL-listed (CSA certified in Canada) and recommended for outdoor use. A polarized plug will fit in a polarized cord only one way. If the plug does not fit fully in the cord, reverse the cord. If it still does not fit, purchase a polarized extension cord. If you have a polarized extension cord and the extension cord plug does not fit fully into the wall receptacle, reverse the plug. If it still does not fit, contact a qualified electrician to install the proper outlet. Do not change the machine or extension cord plug in any way.

Starting and Stopping the Motor

Starting the Electric Motor

Important: Check any extension cord carefully for broken connectors, bare wires, or damaged insulation. Do not use any cord found to be in poor condition. Make sure that the extension cord is not routed through standing water and that all connections are tight. Use the shortest extension cord possible.

1. Plug the power cord into any 115 single phase, 60-cycle, fused outlet.
2. Turn the motor on by flipping the On/Off switch to the On position; refer to Figure 11.

   Note: The switch is marked l (On) and O (Off).

Stopping the Electric Motor

1. Turn the motor off by flipping the On/Off switch to the Off position; refer to Figure 11.
2. Disconnect the power cord.

Resetting the Electric Motor

If the motor draws too much current, it will automatically shut off. In that event, follow these steps:

1. Move the On/Off switch to the Off position; refer to Figure 11.
2. Unplug the machine from the power source.
3. Allow the electric motor to cool for 3 to 5 minutes.
4. In the event of a motor shutoff:
   - Check to make sure the motor fan cover is not blocked.
   - Check to see if the drum is overfilled or obstructed.

     Important: When removing anything from the drum by hand, always make sure that the machine is unplugged.
   - Check to make sure that the machine is plugged into a correct outlet; refer to Connecting to a Power Source (page 10).
5. Press the reset button; refer to Figure 11.
6. Plug the machine into the power source.
7. Move the On/Off switch to the On position; refer to Figure 11.

Note: If the motor continues to overheat after these measures have been taken, take the machine to an Authorized Service Dealer.

Using the Pedestal

Note: For Model 68001 only

Assembling the Pedestal

1. Place 2 halves of the support legs together, and insert pivot tube through the center of the legs (Figure 13).
2. Insert the locking pin through the bottom of the pivot tube (Figure 13).

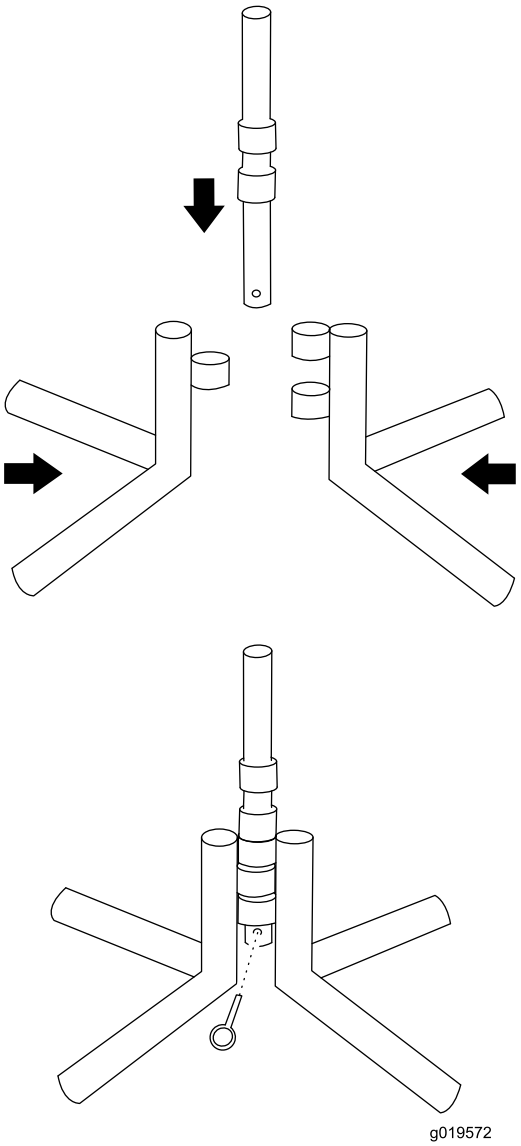

Figure 13

Attaching Pedestal Stand to the Machine

1. Tip the mixer, as if dumping contents, and place it squarely on the drum opening.

⚠ CAUTION

The pivot mount will rotate freely about the axle when tipping the mixer onto the drum opening. The rotating pivot mount can cause pain and injury to legs.

Stand clear of wheel axle.

2. Rotate the pivot mount plate away from the drum and onto the front stop (Figure 14).

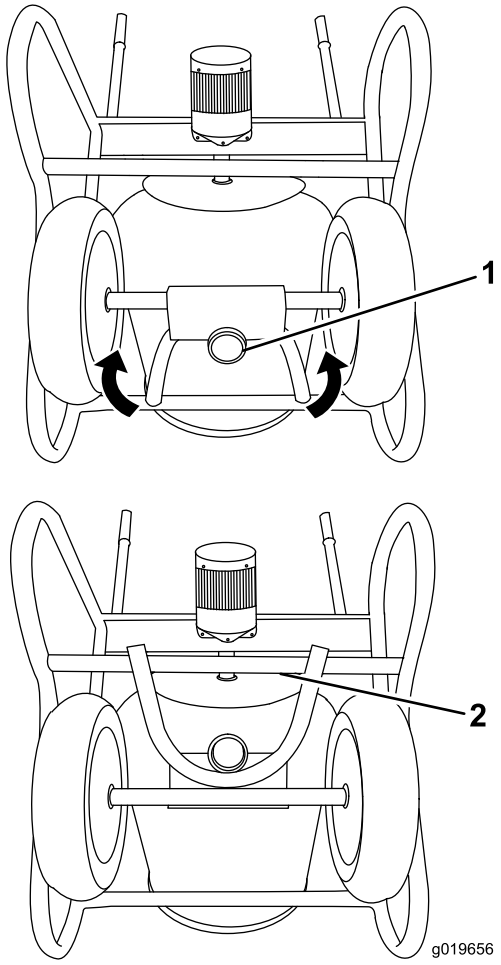

Figure 14

1. Pivot mount
2. Frame stop

3. Insert the pedestal stand assembly through the pivot mount (Figure 15).

⚠ CAUTION

Use 2 people to tilt the mixer upright onto the stand.

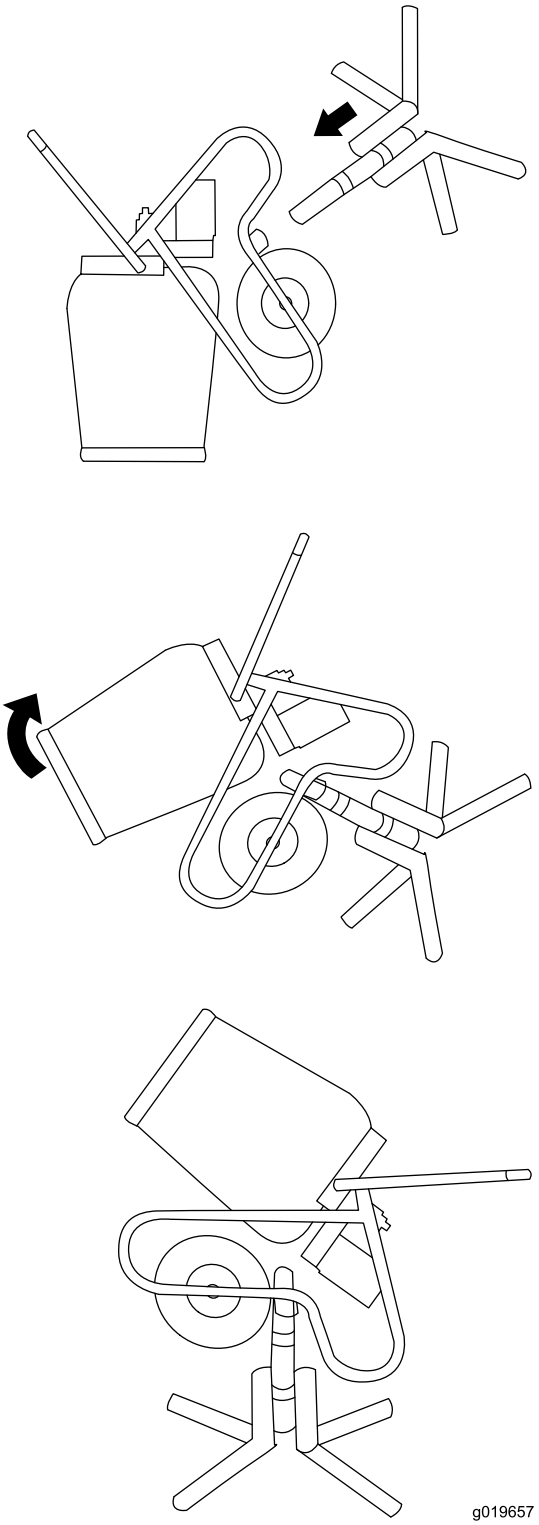

Figure 15

4. Move to the front of the machine and begin tilting it upright onto the stand (Figure 15).

Note: Always bend your knees and use correct posture for lifting.

⚠ WARNING

Do not tilt mixer upright onto stand on a wet, uneven, or slippery surface. Failure to follow this instruction could result in personal injury and damage to the equipment.

Set up the pedestal on flat ground with plenty of traction before attempting to tilt the machine upright onto the stand.

5. Tilt the machine to the upright mixing position.

Mixing the Material

⚠ DANGER

Eye and skin contact with concrete materials and breathing the dust involved is hazardous to your health.

- **Wear a dust mask to prevent inhalation of dust while using the machine; refer to (page).**
- **Avoid direct contact of cement and concrete materials with skin and eyes.**

Important: Do not add more material than the batch capacity for your specific machine model; refer to Specifications (page 9).

Note: Follow the manufacturer's instructions that are printed on the packaging of the product.

There are 4 basic ingredients in concrete:

- Sand
- Gravel
- Portland cement
- Water

Depending on the application you can use different ratios of these 4 ingredients.

There are many variations of concrete mix recipes, depending on the application. It is important to use the appropriate quantity of water. Using too little water will result in dry areas in the mix, but using too much water will result in weaker concrete. The amount of water needed will vary depending on moisture content of the sand and gravel. The mix should have a thickness similar to peanut butter.

Keep the poured concrete damp for several days to obtain proper curing. Evaporation results in weaker concrete. Concrete cures through hydration, a reaction between water and cement.

Mixing Pre-Mix Concrete

1. Turn the machine on.
2. Pour water into the drum.
3. Add the required amount of dry pre-mix concrete.
4. Allow the drum to turn while the mix reaches the appropriate consistency.
5. Pour the properly mixed concrete quickly.
6. Start next batch right away or clean out the drum immediately.

Mixing Sand, Gravel, and Cement

The typical ratio for mixing concrete is 1 part Portland cement, 2 parts sand, and 3 parts gravel.

1. Turn the machine on.
2. Pour water into the drum.
3. Add the required amount of gravel.
4. Add the required amount of Portland cement.
5. Add the required amount of sand.
6. Allow the drum to turn while the mix reaches the appropriate consistency.
7. Pour the properly mixed concrete quickly.
8. Add the water and gravel to the drum to begin next batch and loosen up mix left by the previous batch.

Note: Adding water and gravel before cement and sand allows the mix left in the drum from the previous batch to tumble off the drum and paddles and into the next batch.

Maintenance

Recommended Maintenance Schedule(s)

Maintenance Service Interval	Maintenance Procedure
After each use	• Remove debris from the machine. • Clean the machine.
Every 200 hours	• Drain and replace the oil in the gearbox.

Important: **Refer to your Motor Operator's Manual for additional maintenance procedures.**

Lubrication

Oil the Gearbox

Service Interval: Every 200 hours

1. Remove the motor cover (Figure 16).

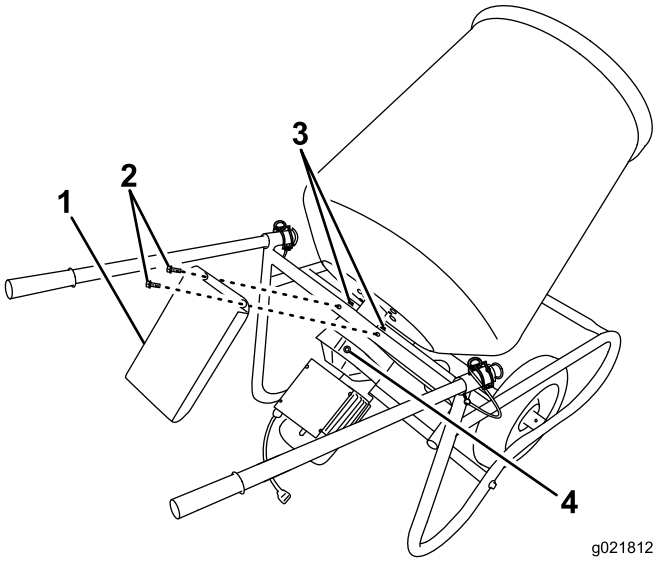

Figure 16

1. Motor cover
2. Bolts
3. Nuts
4. Oil plug

2. Remove the oil plug (Figure 16).
3. Drain the oil.

   Note: Carefully flip the machine upsidedown to a waiting oil pan for the oil to drain. When finished, flip the machine right-side up.
4. Pour 0.2 L (8.0 oz) of oil into the gearbox.

   Note: Use Mobil 1 LS 75W–90 Gear Lubricant or equivalent.
5. Install the oil plug and motor cover.

Cleaning

Coat the drum and frame with a concrete preventative. This will make cleaning the machine easier.

Regular cleaning and washing will increase the lifespan of the machine. Clean the machine directly after use, before the cement hardens.

Use care when using a high-pressure sprayer, because it can damage warning decals, instruction signs, and the motor.

Wash the machine with mild detergent and water. Do not get the motor wet.

Storage

For storage over 30 days, prepare the machine as follows:

1. Remove dirt and grime from the external parts of the entire machine, especially the motor. Clean dirt and concrete from the inside and outside of the drum; refer to Cleaning (page 14).
2. Check and tighten all bolts, nuts, and screws. Repair or replace any part that is damaged.
3. Paint all scratched or bare metal surfaces. Paint is available from your Authorized Service Dealer.
4. Inspect the electrical cord and electrical connectors for damage.
5. Store the machine in a clean, dry garage or storage area.
6. Cover the machine to protect it and keep it clean.

Troubleshooting

Problem	Possible Cause	Corrective Action
The electric motor will not start.	1. The connector for the machine is not plugged in to a power source. 2. The current protector for the electrical source is open.	1. Plug the connector into a socket or and extension cord from an electrical source. 2. Reset the circuit protector.
The motor runs but the mixer rotation is underpowered.	1. The drum is overfilled. 2. Extension cord is too long or too high of a gauge.	1. Dump out concrete until the motor runs at full power. 2. Plug in mixer using shorter extension cord or cord of a lower gauge.

Notes:

Notes:

Notes:

Toro Compact Utility Equipment Warranty

A One-Year Limited Warranty

CUE Products

Conditions and Products Covered

The Toro® Company and its affiliate, Toro Warranty Company, pursuant to an agreement between them, jointly warrant your Toro Compact Utility Equipment ("Product") to be free from defects in materials or workmanship. The following time periods apply from the date of purchase:

Products	Warranty Period
Loaders, Trenchers, Stump Grinders, Chippers, Log Splitters and Attachments	1 year or 1000 operating hours, whichever occurs first
Kohler Engines	3 years
All other Engines	2 years

Where a warrantable condition exists, we will repair the Product at no cost to you including diagnosis, labor, and parts.

Instructions for Obtaining Warranty Service

If you think that your Toro Product contains a defect in materials or workmanship, follow this procedure:

1. Contact any Authorized Toro Compact Utility Equipment (CUE) Service Dealer to arrange service at their dealership. To locate a dealer convenient to you, access our website at www.Toro.com. You may also call our Toro Customer Care Department toll free at 888-865-5676 (U.S. customers) or 888-865-5691 (Canadian customers).
2. Bring the product and your proof of purchase (sales receipt) to the Service Dealer.
3. If for any reason you are dissatisfied with the Service Dealer's analysis or with the assistance provided, contact us at:

   LCB Customer Care Department
   Toro Warranty Company
   8111 Lyndale Avenue South
   Bloomington, MN 55420-1196
   Toll Free: 888-865-5676 (U.S. customers)
   Toll Free: 888-865-5691 (Canada customers)

Owner Responsibilities

You must maintain your Toro Product by following the maintenance procedures described in the *Operator's Manual*. Such routine maintenance, whether performed by a dealer or by you, is at your expense. Parts scheduled for replacement as required maintenance ("Maintenance Parts"), are warranted for the period of time up to the scheduled replacement time for that part. Failure to perform required maintenance and adjustments can be grounds for disallowing a warranty claim.

Items and Conditions Not Covered

Not all product failures or malfunctions that occur during the warranty period are defects in materials or workmanship. This express warranty does not cover the following:

- Product failures which result from the use of non-Toro replacement parts, or from installation and use of add-on, modified, or unapproved accessories
- Product failures which result from failure to perform required maintenance and/or adjustments
- Product failures which result from operating the Product in an abusive, negligent or reckless manner
- Parts subject to consumption through use unless found to be defective. Examples of parts which are consumed, or used up, during normal Product operation include, but are not limited to, teeth, tines, blades, spark plugs, tires, tracks, filters, chains, etc.
- Failures caused by outside influence. Items considered to be outside influence include, but are not limited to, weather, storage practices, contamination, use of unapproved coolants, lubricants, additives, or chemicals, etc.
- Normal "wear and tear" items. Normal "wear and tear" includes, but is not limited to, worn painted surfaces, scratched decals or windows, etc.
- Any component covered by a separate manufacturer's warranty
- Pickup and delivery charges

General Conditions

Repair by an Authorized Toro Compact Utility Equipment (CUE) Service Dealer is your sole remedy under this warranty.

Neither The Toro® Company nor Toro Warranty Company is liable for indirect, incidental or consequential damages in connection with the use of the Toro Products covered by this warranty, including any cost or expense of providing substitute equipment or service during reasonable periods of malfunction or non-use pending completion of repairs under this warranty. All implied warranties of merchantability and fitness for use are limited to the duration of this express warranty. Some states do not allow exclusions of incidental or consequential damages, or limitations on how long an implied warranty lasts, so the above exclusions and limitations may not apply to you.

This warranty gives you specific legal rights, and you may also have other rights which vary from state to state.

Except for the engine warranty coverage and the Emissions warranty referenced below, if applicable, there is no other express warranty. The Emissions Control System on your Product may be covered by a separate warranty meeting requirements established by the U.S. Environmental Protection Agency (EPA) or the California Air Resources Board (CARB). The hour limitations set forth above do not apply to the Emissions Control System Warranty. Refer to the California Emission Control Warranty Statement supplied with your Product or contained in the engine manufacturer's documentation for details.

Countries Other than the United States or Canada

Customers who have purchased Toro products exported from the United States or Canada should contact their Toro Distributor (Dealer) to obtain guarantee policies for your country, province, or state. If for any reason you are dissatisfied with your Distributor's service or have difficulty obtaining guarantee information, contact the Toro importer. If all other remedies fail, you may contact us at Toro Warranty Company.