FORM NO. 3320-696

TORO®

MODEL NO. 20324 - 2000001 & UP
MODEL NO. 20325 - 2000001 & UP

OPERATOR'S MANUAL

21" RECYCLER® MOWER

⚠ SAFETY INSTRUCTIONS

WARNING: Engine exhaust contains carbon monoxide which is an odorless, deadly poison. Carbon monoxide is also known to the State of California to cause birth defects. Do not run engine indoors or in an enclosed area.

BEFORE OPERATING

1. Read this manual carefully before operating the mower. Become familiar with the controls and proper use of the mower. Never allow children to operate the mower or adults to operate it without proper instructions.

2. Keep everyone, especially children and pets, away from area of operation. Thoroughly inspect area where mower will be used and remove sticks, stones, wire, and debris.

3. Wear long pants and substantial shoes. Do not operate mower while wearing open-toed shoes, jewelry, loose clothing or when barefoot.

4. Check fuel level before starting engine. Do not fill fuel tank indoors, when the engine is running, or until engine cools for several minutes after running. Wipe up spilled gasoline before starting engine.

5. Keep all guards, shields, discharge tunnel plug, grass catcher, optional side discharge chute and safety devices in place. Repair or replace damaged parts, including decals. Check all safety devices before each use.

6. Traction drive and blade are designed to stop when control bar is released. Ensure control and brake function properly before each use of mower.

WHILE OPERATING

7. Do not run engine indoors.

8. Always maintain secure footing. Keep a firm grip on the handle and walk; never run. Never operate mower in wet grass. Mow only in daylight or in good artificial light.

9. Mow across the face of slopes; never up and down. Use extreme caution when changing direction on slopes. Do not mow excessively steep slopes.

10. Always wear safety glasses or eye shields during operation to protect eyes from foreign objects that may be thrown from the machine. Keep face, hands, and feet away from the mower housing and cutter blade when the engine is running. Stay behind the handle until the engine stops.

11. Since the blade rotates for a few seconds after the blade control bar is released, stay behind the handle until all moving parts stop.

12. After striking a foreign object or if mower vibrates abnormally, stop engine and remove wire from spark plug. Check mower for damage and make all repairs before using mower again.

13. Stop the engine before adjusting the height-of-cut.

14. Stop the engine when crossing a gravel driveway, road, or sidewalk.

15. Stop engine before leaving the operator's position—behind the handle. Disconnect wire from spark plug if mower will be unattended or not used.

16. Do not touch any engine components while it is running or shortly after it is stopped because engine will be hot enough to cause a burn.

17. Refuel engine only when cool.

MAINTENANCE

18. Perform only those maintenance instructions described in this manual. If major repairs are ever needed or if assistance is desired, contact your local Authorized TORO Service Dealer.

19. Before mower is cleaned, inspected, serviced, or adjusted, stop engine and disconnect wire from spark plug. Keep wire away from plug to prevent accidental starting.

20. To ensure the mower is in safe operating condition, frequently check and keep all nuts, bolts, and screws tight. Ensure blade nuts are tightened to 15-27 ft-lb (20-37 N·m).

21. To reduce fire hazard, keep engine free of excessive grease, grass, leaves, and accumulations of dirt.

22. Allow engine to cool before storing mower in any enclosure. Do not store mower near any open flame or where gasoline fumes may be ignited by a spark.

23. Do not overspeed the engine by changing governor settings.

24. At the time of manufacture, the mower conformed to the safety standards in effect for rotary mowers. To ensure best performance and continued safety certification of the mower, use genuine TORO replacement parts and accessories. Replacement parts and accessories made by other manufacturers may result in non-conformance with the safety standards, and that could be dangerous.

©The Toro Company-1991

SAFETY SYMBOL GLOSSARY

Safety decals and instructions are easily visible to the operator and are located near any area of potential danger. Replace any decal that is damaged or lost.



Safety alert



Keep hands and feet away from rotating blade



Engine speed (Throttle)



Ignition off



Traction drive ENGAGED



Keep hands and feet away from rotating blad



Keep bystanders from area being mowed



Neutral



Choke on



Pull fingertip starter to start mower



Fast



Slow

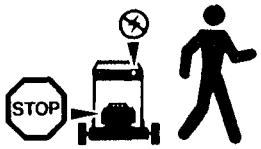

Stop engine before leaving operator position



Locked



Unlocked

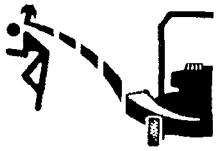

Keep all guards in place

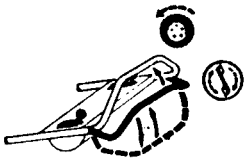

Squeeze control bar against handle to engage blade and traction drive



Read and understand operator's manual

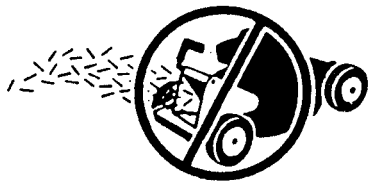

Never open chute door on mower when engine is running, unless grass bag or optional side discharge attachment is installed

TABLE OF CONTENTS

	Page
Set-Up Instructions	3
Before Operating	4
Recycler® Mower Tips	5
Operating Instructions	7
Maintenance	10
Servicing Air Cleaner	10
Replacing Spark Plug	11
Draining Gasoline	11
Changing Crankcase Oil	11
Adjusting Throttle	11
Adjusting Wheel Drive	12
Inspecting/Removing/Sharpening Blade	12
Lubrication	13
Adjusting Blade Brake	13
Charging Battery	14
Cleaning Mower Housing, Discharge Tunnel, Belt Cover and Plug	14
Cleaning Blade Brake Clutch Shield	15
Preparing Mower For Storage	15
Optional Equipment	16
Product Identification	16
Toro Service Support	16

SET-UP INSTRUCTIONS

INSTALL HANDLE AND BATTERY

1. Align handle and tighten handle knobs (Fig. 1). Move handle latches slightly outward so they will not be in the way when pivoting the handle backward into the operating position (Fig. 1).

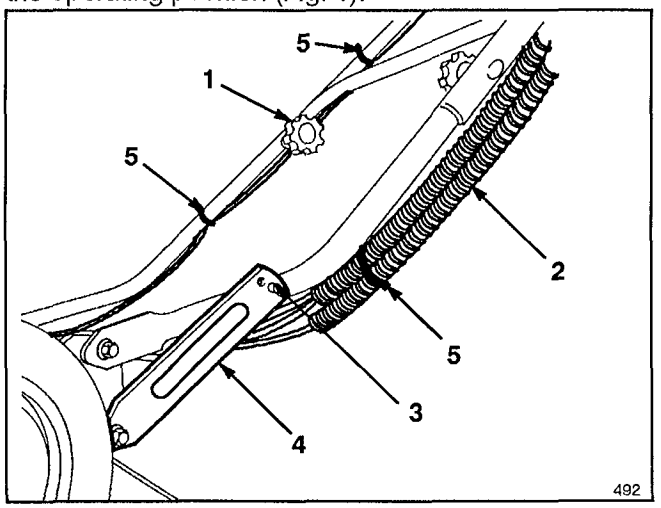

Figure 1

1. Handle knob
2. Control cable
3. Handle stud
4. Handle latch
5. Cable tie

2. Pivot handle backward. Move handle latches inward while snapping handle stud into center hole of handle latch (Fig. 1). If a handle latch does not fit tightly against the handle tube, remove latch from handle stud, bend the latch inward, and reattach to handle stud. Repeat as necessary to ensure a tight fit between latch and handle.

3. Ensure control cables (Fig. 1) are to the rear and inside of handles. Secure cable to right handle with cable ties. Tighten handle knobs securely.

Note: If handle height is not satisfactory, adjust by placing handle stud (Fig. 1) into a different hole.

4. CHARGE BATTERY (key start model) – Refer to Charging Battery, page 14. Slide battery, decal side up, between mounting tabs on back of control panel and connect wires (Fig. 2). Insert key into switch when ready to start engine.

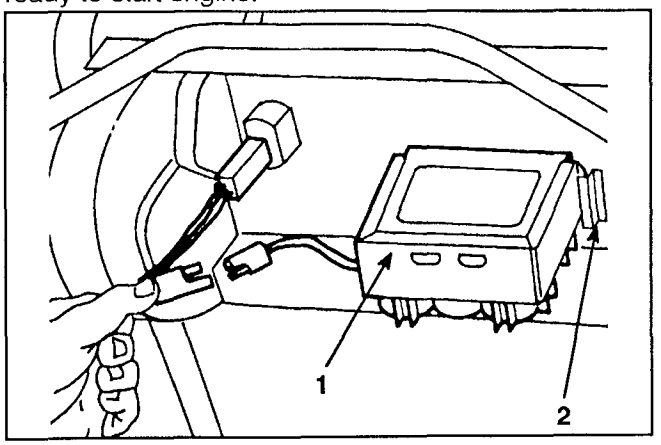

Figure 2

1. Battery
2. Mounting tab

5. Unscrew gas tank cap. If there is a plastic plug over the tank opening, remove and discard it. Reinstall gas tank cap.

INSTALL DISCHARGE TUNNEL PLUG

1. Make sure engine is off.

2. Open the discharge door by pulling forward on the handle and moving it rearwards (Fig. 3). Hold the discharge door handle to prevent the spring-loaded door from closing while inserting the plug.

3. Since the plug is slightly wider than the discharge tunnel opening, rotate the plug clockwise slightly while inserting it (Fig. 3). Make sure the arrow on the plug decal is pointing upwards.

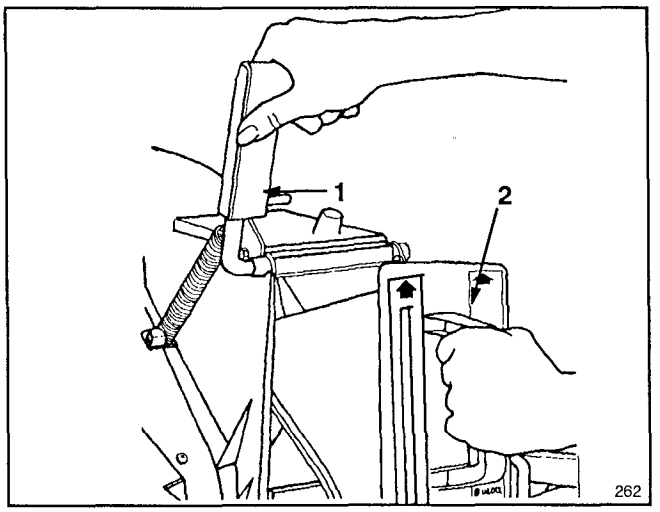

Figure 3

1. Discharge door handle
2. Plug rotated clockwise

4. Push the plug all the way in until the spring clip on the bottom of the plug clicks into place, locking the plug securely into the discharge tunnel (Fig. 4). Release discharge door handle to lock top of plug.

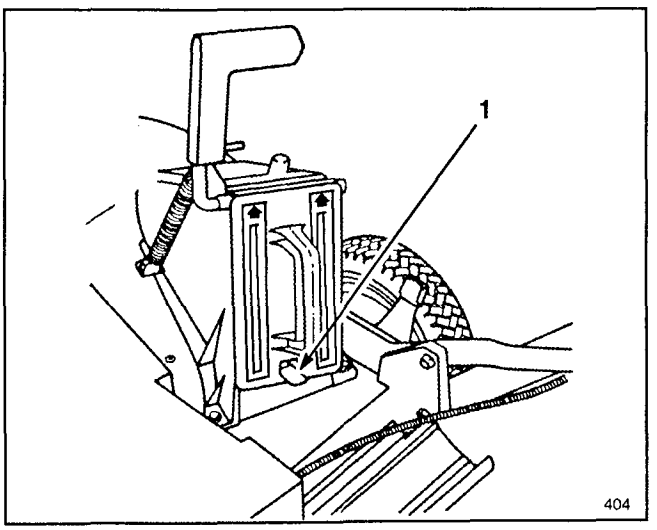

Figure 4

1. Spring clip

BEFORE OPERATING

FILL CRANKCASE WITH OIL (Fig. 5)

Fill crankcase with SAE 30 oil until oil level reaches FULL mark on dipstick as shown in Figure 5. The maximum crankcase capacity is 25 ounces (0.75 liters) of oil. Use of multi-viscosity oils (10W30, etc.) above 40° F (4° C) will result in high oil consumption and possible engine damage. Use any high quality detergent oil having the American Petroleum Institute (API) "service classification" – SE, SF or SG.

Before each use, ensure oil level is between ADD and FULL marks on dipstick. Add oil if level is low.

1. Position mower on level surface and clean around oil dipstick.

2. Remove dipstick by rotating cap counterclockwise 1/4 turn.

3. Wipe dipstick and insert it into filler neck. Rotate cap clockwise 1/4 turn. Then remove dipstick and check level of oil. If level is low, add only enough oil to raise level to FULL mark on dipstick. **DO NOT FILL ABOVE FULL MARK BECAUSE ENGINE COULD BE DAMAGED WHEN STARTED. POUR OIL SLOWLY.**

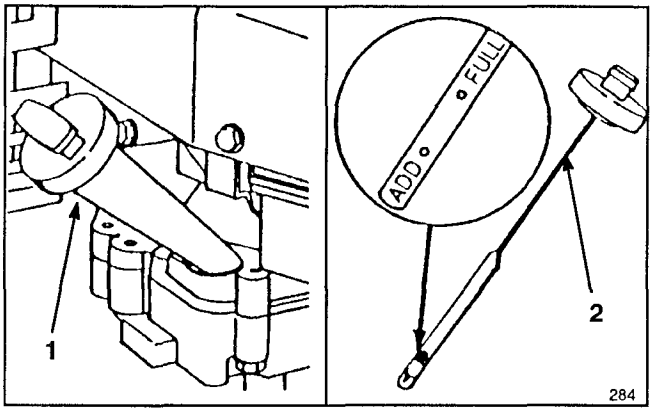

Figure 5

1. Oil fill tube **2. Dipstick**

4. Insert dipstick into filler neck and rotate cap clockwise 1/4 turn to lock.

Note: Check oil level each time mower is used or after every 5 operating hours. Initially, change oil after the first 2 hours of operation; thereafter, change oil after every 25 hours of operation. More frequent oil changes are required in dusty or dirty conditions.

⚠ WARNING

DANGER: Gasoline is extremely flammable and explosive under certain conditions. Do not smoke when handling fuel and keep fuel far away from open flames and sparks. Never buy more than a 30 day supply of gasoline. Store it in an approved container. Keep gasoline out of reach of children.

Refuel outdoors and only when engine is cold. Fill tank to within 1/4" to 1/2" (6 to 13 mm) from top of filler neck, not into filler neck. This space is for expansion of fuel. Use funnel or spout to prevent spilling. Wipe up any spilled gas.

FILL FUEL TANK WITH GASOLINE

Note: The Toro Company strongly recommends the use of fresh, clean, UNLEADED regular grade gasoline in Toro gasoline powered products. Unleaded gasoline burns cleaner, extends engine life, and promotes good starting by reducing the build-up of combustion chamber deposits. Leaded gasoline can be used if unleaded is not available.

Toro also recommends that Toro Stabilizer/Conditioner be used regularly in all Toro gasoline powered products during operation and storage seasons. Toro Stabilizer/Conditioner cleans the engine during operation and prevents gum-like varnish deposits from forming in the engine during periods of storage.

1. Clean around fuel tank cap and remove cap from tank. Using unleaded gasoline, fill fuel tank to within 1/4" to 1/2" (6 to 13 mm) from top of tank, not into the filler neck. This space is for expansion of fuel. Do not fill tank full.

2. Reinstall fuel tank cap and wipe up any spilled gasoline.

IMPORTANT: DO NOT MIX OIL WITH THE GASOLINE. NEVER USE METHANOL, GASOLINE CONTAINING METHANOL, GASOHOL CONTAINING MORE THAN 10% ETHANOL, PREMIUM GASOLINE OR WHITE GAS BECAUSE ENGINE FUEL SYSTEM DAMAGE COULD RESULT.

DO NOT USE FUEL ADDITIVES OTHER THAN THOSE MANUFACTURED FOR FUEL STABILIZATION DURING STORAGE SUCH AS TORO'S STABILIZER/CONDITIONER OR A SIMILAR PRODUCT. TORO'S STABILIZER/CONDITIONER IS A PETROLEUM DISTILLATE BASED CONDITIONER/STABILIZER. TORO DOES NOT RECOMMEND STABILIZERS WITH AN ALCOHOL BASE SUCH AS ETHANOL, METHANOL OR ISOPROPYL. ADDITIVES SHOULD NOT BE USED TO TRY TO ENHANCE THE POWER OR PERFORMANCE OF MACHINE.

RECYCLER® MOWER TIPS

RECYCLER® MOWER FEATURES

The Toro Recycler® mower has a new and completely different cutting concept that leaves your lawn with a bagged look without bagging clippings.

Your Recycler® mower is equipped with special parts which increase your mower's ability to cut and recut grass clippings, leaves, and other yard debris into tiny particles and inject them down into the grass. These parts are:

- A special blade and blade stiffener
- Four special "kicker plates" positioned on the underside of the mower deck in strategic positions (Fig. 6)

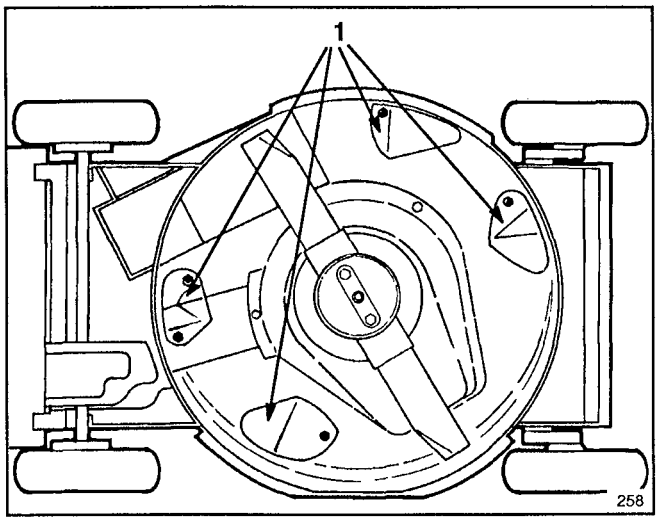

Figure 6

1. Kicker plates

- A special plug which locks into the mower's discharge tunnel (a fifth kicker is on the plug) (Fig. 7)

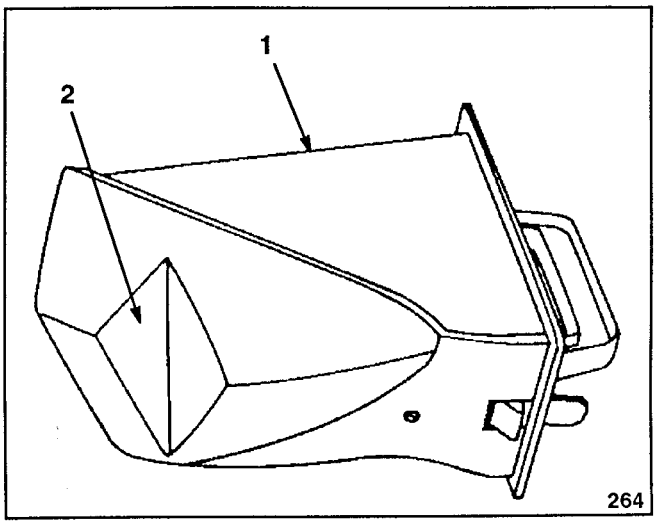

Figure 7

1. Plug **2. Kicker**

The blade and four kicker plates are permanent parts of your mower. The blade should be removed only for sharpening or replacement. The kickers should never be removed, unless they need to be replaced. They do not interfere with the normal bagging or optional side discharge operations of the mower.

The plug, however, is a removable part, just as the grass bag and optional side discharge chute are removable parts. You cannot use the plug in combination with either the grass bag or the side discharge chute.

It is possible to mow without using the plug by closing the discharge tunnel door. However, your lawn appearance will be much more satisfactory if you use the plug as it has an additional kicker (Fig. 7) that helps drive the clippings down into the grass.

⚠ WARNING

- **Grass clippings and other objects can be thrown from an open discharge tunnel.**
- **Thrown objects can cause serious injury or kill operator or bystanders.**
- **Never start or operate the mower unless one of the following is true:**

  1. The discharge tunnel plug is locked securely in discharge tunnel.

  2. The grass bag is locked in place.

  3. The optional side discharge chute is locked in place.

  4. The discharge tunnel door is locked closed.

⚠ WARNING

- **Wet grass can cause you to slip and contact blade.**
- **Blade contact can seriously injure you.**
- **Mow only in dry conditions.**

TIPS FOR CUTTING GRASS CLIPPINGS

Even with the Recycler® mower, you may encounter conditions where it is not possible to hide all of the finely cut clippings or leaves all of the time down in the grass. Follow these instructions for the best cutting results and lawn appearance:

- Maintain a **sharp blade** throughout the cutting season. Periodically file down nicks on blade.
- Clean any residue from the underside of mower housing, kickers, and plug after each use. See Cleaning Mower Housing, Discharge Tunnel, Belt Cover and Plug, page 14.

RECYCLER® MOWER TIPS

- When cutting grass over 6" tall, you may want to cut the lawn twice to hide clippings down in the grass.
- In the heat of the summer, it is best to cut grass at the C, D or E height-of-cut settings. Cut only about 1/3 of the grass blade. Cutting below the C setting is not recommended unless grass is sparse or it is late fall when grass growth begins to slow down. When cutting long grass, you may need to use a higher height-of-cut setting and a slower walking speed; then recut the grass at a more normal setting. If grass is too long and leaves clumps on top of lawn, mower may plug and cause engine to stall.
- Alternate mowing direction. This helps disperse clippings over lawn for even fertilization.

If the lawn appearance is not satisfactory after mowing, try one or more of the following:

- Sharpen the blade.
- Walk at a slower pace while mowing.
- Raise the height-of-cut setting on your mower.
- Cut your grass more frequently.
- Overlap cutting swaths instead of cutting a full swath with each pass.
- Mow across the marginal areas a second time.
- Set height-of-cut on front wheels one notch lower than rear wheels. (example: set front wheels at "C" setting and rear wheels at "D" setting)

TIPS FOR CUTTING LEAVES

You can cut up leaves in the fall instead of bagging. If you decide to bag, the Recycler® mower reduces the number of leaf bags you will need by finely chopping up the leaves before they are bagged. Some leaf particles will be injected back down into the soil. When spring arrives, the leaf particles will have decomposed and returned valuable nutrients to the soil.

- Ensure leaves are dry.
- When cutting is complete, always be sure that 50% of the lawn shows through the cut leaf cover. This may require one or more passes over the leaves.
- For light leaf coverage, mow with all wheels at the same height-of-cut setting.
- If there are more than five inches of leaves on lawn, set the front wheels one or two notches higher than the rear wheels. This makes it easier to feed leaves under mower deck.
- Walk at a slower mowing speed if leaves are not cut up finely enough to be hidden down in the grass.
- If you cut up a lot of oak leaves, you might want to add lime to your grass in the spring. Lime reduces the acidity of oak leaves.

OPERATING INSTRUCTIONS

OPERATING TIPS

1. CHECK OIL LEVEL—Maintain oil level between ADD and FULL marks as shown on dipstick (Fig. 5).

2. BEFORE EACH MOWING—Ensure self-propelled drive and control bar function properly. When control bar is released, blade and self-propelled drive are designed to stop.

STARTING, STOPPING, AND SELF-PROPELLING

1. CONTROLS—Key switch (key start model), ground speed control, throttle, and blade/self-propelled control bar are on upper handle (Fig. 8). Fingertip starter is on top of engine (Fig. 9).

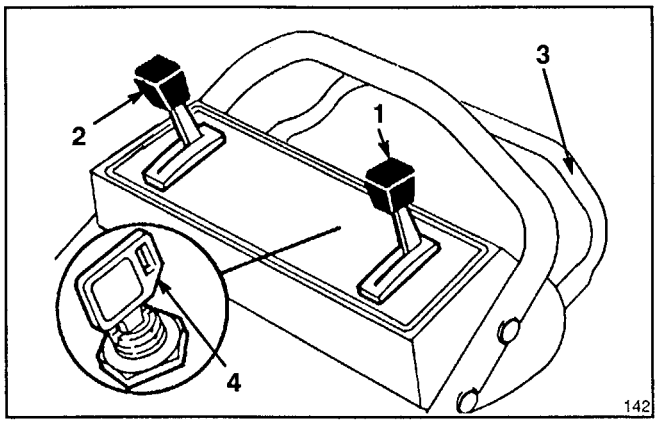

(Model 20325)

Figure 8

1. Throttle control
2. Ground speed control
3. Self-propelled control bar
4. Key switch

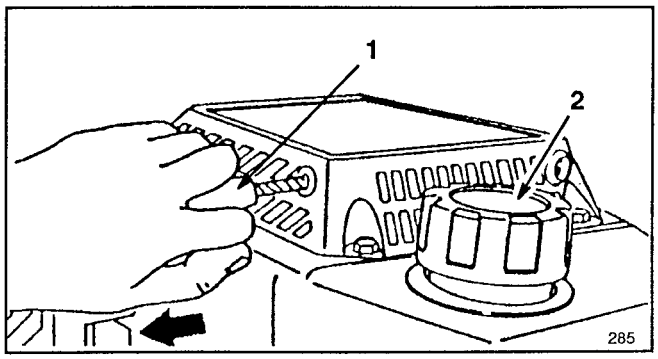

Figure 9

1. Recoil starter
2. Gas tank cap

2. Push spark plug wire onto spark plug (Fig. 18).

3. Move ground speed control to (N).

4a. KEY-LECTRIC STARTING—Move throttle to (CHOKE). Turn key to START and release when engine begins running. When engine starts, remove throttle from (CHOKE) and regulate as desired. If the battery's charge is too weak to start the engine, the engine can be started with the fingertip starter (Fig. 9).

4b. MANUAL STARTING—Move throttle to (CHOKE). Brace yourself and mower securely by placing your foot over the foot symbol on the top left side of mower housing. Pull fingertip starter out until positive engagement results; then pull vigorously to start the engine. When engine starts, remove throttle from (CHOKE) and regulate as desired.

5. GROUND SPEED (Fig. 8)—Ground speed varies, depending on space between control bar and handle. Move ground speed control to desired setting. Number "1" is slow, "2" is medium, and "3" is a fast walking pace. Move ground speed control to (N) when using the mower for trimming and whenever leaving the mower.

6. BLADE AND TRACTION OPERATION (Fig. 10)—Move control bar down to "A" and raise to "B" to engage blade. Squeeze control bar against handle "C" to drive. To disengage traction drive but keep blade engaged, gradually release control bar to mid position. To self-propel with blade disengaged, simply squeeze control bar against handle, eliminating downward movement necessary for blade engagement.

NOTE: The drive wheels are equipped with freewheeling clutches which enable the mower to be pulled rearward easier when the wheel drive is disengaged. To disengage the clutches, mower must be pushed forward at least 1" after wheel drive operation has stopped.

7. STOPPING (Fig. 10)—Release control bar to stop blade and traction drive. Move ground speed control to (N). To stop engine, move throttle to (OFF). Remove key from switch (key start model) and pull wire off spark plug if mower will be unattended or not used.

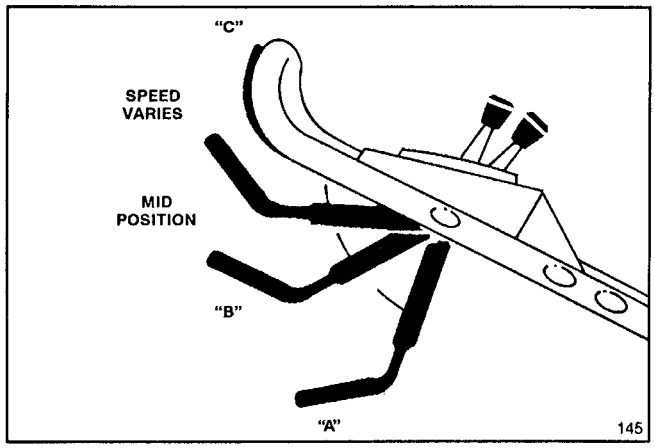

Figure 10

USING DISCHARGE TUNNEL PLUG

1. Make sure engine is off. Open the discharge door by pulling forward on the handle and moving it rearwards (Fig. 11). Hold the discharge door handle to prevent the spring-loaded door from closing while inserting the plug.

OPERATING INSTRUCTIONS

2. Since the plug is slightly wider than the discharge tunnel opening, you must rotate the plug clockwise slightly while inserting it (Fig. 11). Make sure the arrow on the plug decal is pointing upwards.

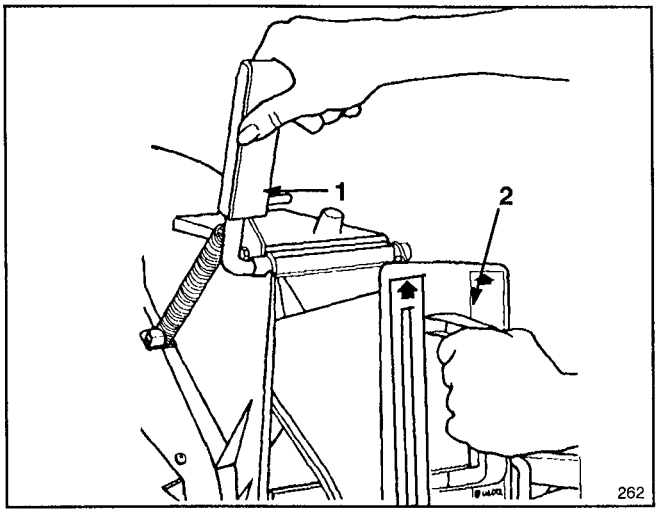

Figure 11

1. Discharge door handle 2. Plug rotated clockwise

3. Push the plug all the way in until the spring clip on the bottom of the plug clicks into place, locking the plug securely into the discharge tunnel (Fig. 12). Release the discharge door handle to lock the top of the plug.

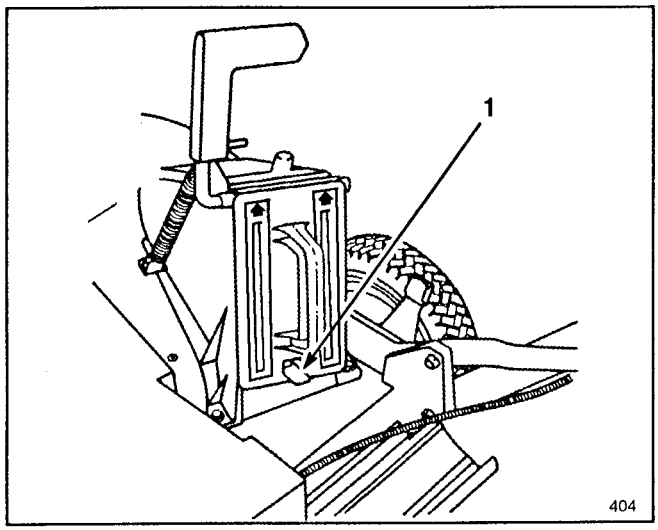

Figure 12

1. Spring clip

4. To remove the plug, move the discharge door handle rearwards while at the same time lift up the spring clip on the bottom of the plug. When the plug is unlocked, pull it out of the discharge tunnel.

USING GRASS BAG

Occasionally you may wish to use the grass bag for bagging extra long grass, lush grass or leaves.

1. Stop engine and wait for all moving parts to stop. Remove key from switch (key start model).

2. Ensure discharge door handle is fully forward and pin is engaged in catch (Fig. 13).

3. INSTALLING BAG – Slide hole in bag frame onto retaining post on housing (Fig. 13) and set rear of bag frame onto lower handle.

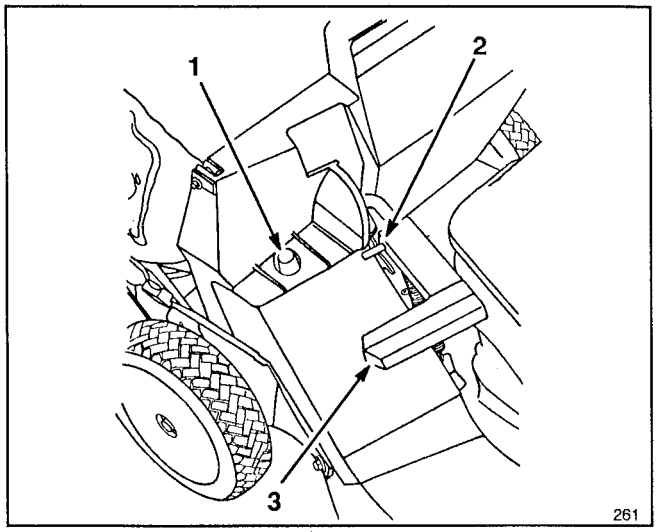

Figure 13

1. Bag frame on retaining post
2. Pin engaged in catch
3. Handle fully forward. Discharge door closed.

4. Pull discharge door handle forward until pin clears catch and move handle rearward until pin locks in bag notch (Fig. 14). Discharge door in mower housing is now open.

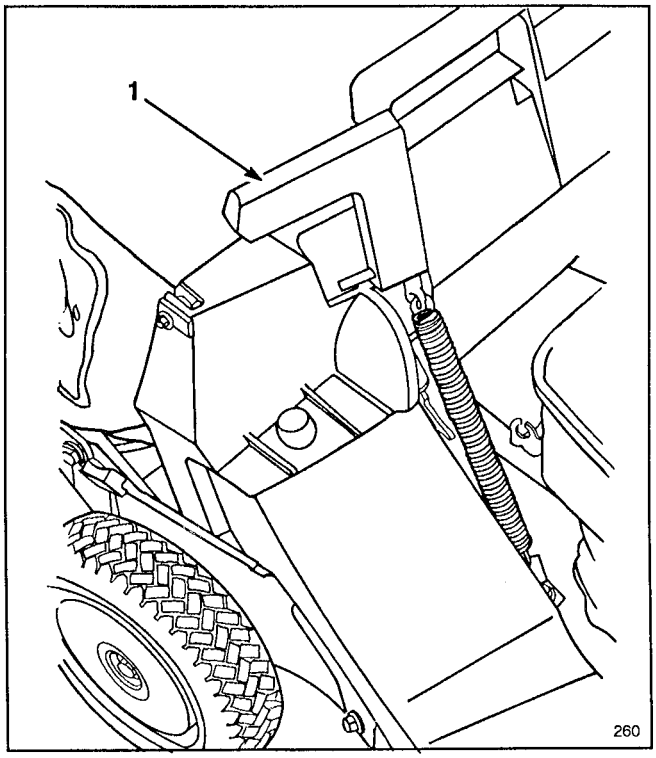

Figure 14

1. Pin locked in bag notch

OPERATING INSTRUCTIONS

⚠ DANGER

- **Grass clippings and other objects can be thrown from an open discharge tunnel.**
- **Objects thrown with enough force could cause serious personal injury or death to operator or bystander.**
- **Never open door on discharge tunnel when engine is running unless the grass bag, optional side discharge attachment or discharge tunnel plug is securely installed.**

⚠ DANGER

- **A worn grass bag could allow small stones and other similar debris to be thrown in operator's or bystander's direction.**
- **Thrown objects can cause serious personal injury or death to operator or bystanders.**
- **Check the grass bag frequently. If it damaged, install a new genuine TORO replacement bag that has this or a similar warning.**

5. EMPTYING BAG—Stop engine and wait for all parts to stop. Raise discharge door handle and move it forward to engage the locking pin with catch (Fig. 13). Grasp handle at front and rear of bag and lift bag off mower. Gradually tip bag forward to empty clippings.

6. To reinstall bag, repeat steps 3-4.

⚠ DANGER

- **Thrown objects may result if discharge door does not close completely.**
- **Thrown objects can cause serious personal injury or death.**
- **If discharge door cannot be closed because grass clippings clog discharge area, stop engine and gently move discharge door handle back and forth until door can be closed completely. If door still cannot be closed, remove obstruction with a stick, not your hand.**

ADJUSTING HEIGHT-OF-CUT

Five letters cast into the housing represent the height-of-cut settings (Fig. 15).

1. Stop the engine. Remove key from switch (key start model).

⚠ DANGER

- **Adjusting height-of-cut levers could bring hands into contact with moving blade.**
- **Contact with blade could cause serious personal injury.**
- **Do not adjust the height-of-cut settings when engine is running and blade is rotating.**
- **Do not put fingers under housing to lift mower when adjusting height-of-cut levers.**

2. For easier adjustment, lift housing up so wheel is off ground. **Do not put fingers under housing when lifting.** Squeeze adjusting lever toward wheel and move to desired setting (Fig. 15). Ensure pin on adjusting lever engages notch in housing. Adjust all wheels to the same setting.

Note: Front wheels can be adjusted to 1/2". Move adjusting lever past "A" and release pin into notch in housing.

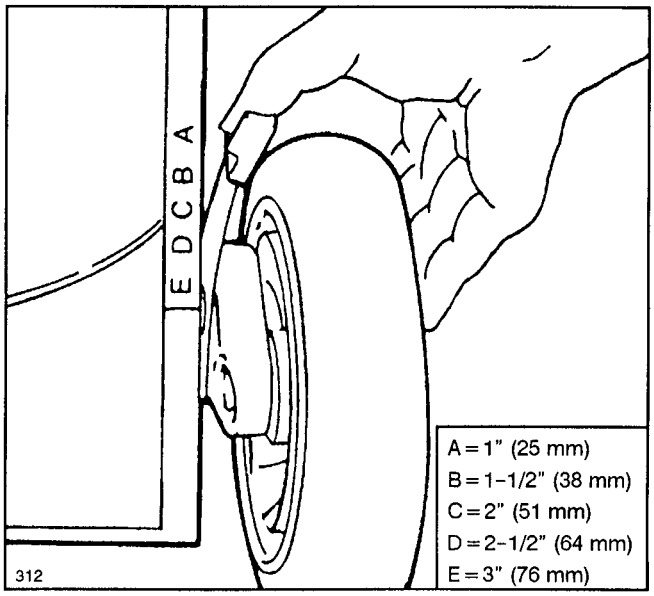

Figure 15

CHECK CONTROL BAR OPERATION

Check the control bar before each use to ensure the Blade Brake Clutch (BBC) system is operating properly.

1. Start engine; refer to Starting, page 7.

2. Push the control bar down to the lowest position (Fig. 16). This "latches" the mechanism prior to engaging the blade.

3. Lift the control bar to the normal "blade engaged" position, about 2" below the handle. The "fan" noise indicates that the mower blade is engaged and rotating.

OPERATING INSTRUCTIONS

4. Release the control bar. A "bang" should be heard, and the blade should stop within 3 seconds. If the blade does not stop within 3 seconds when the control bar is released, stop using it until it has been serviced by an Authorized TORO Service Dealer.

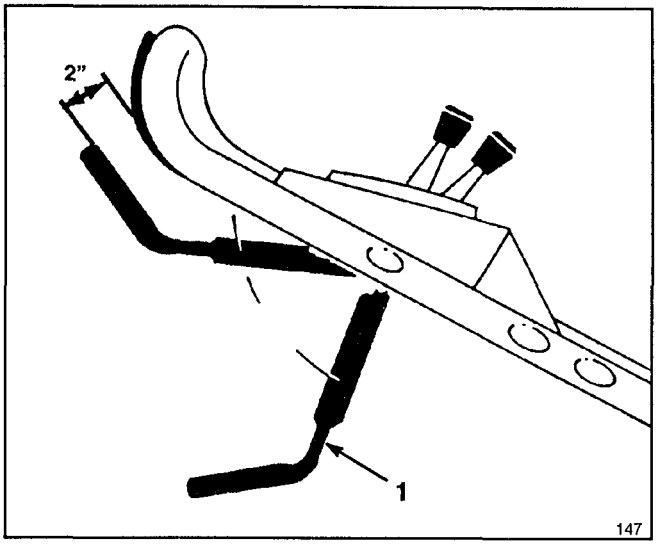

Figure 16

1. Control bar

If the control bar "hangs up" and the blade does not stop quickly, it indicates possible deterioration has set in, which could result in an unsafe operating condition. Have mower inspected by an Authorized TORO Service Dealer.

CAUTION: If the control bar "hangs up", and the blade does not stop quickly, you should stop the blade before shutting off the engine. This can be done by raising the control bar to the normal operating position and releasing it.

The grass bag can be used for an additional test to check the Blade Brake Clutch mechanism.

1. Install the empty grass bag on the discharge tunnel.

2. Push the control bar down to the lowest position (Fig. 16).

3. Lift the control bar to the normal "blade engaged position, about 2" below the handle. The bag should begin to inflate which indicates the blade is engaged and rotating.

4. Release control bar. If the bag does not immediately deflate, it indicates the blade is still rotating. Deterioration of the Blade Brake Clutch mechanism may have set in, which could result in an unsafe operating condition. Have mower inspected by an Authorized TORO Service Dealer.

MAINTENANCE

⚠ WARNING

- **Engine could start accidentally.**
- **Accidental starting of engine could cause serious injury to operator or bystanders.**
- **Pull wire off spark plug before performing any maintenance or adjustments.**

SERVICING AIR CLEANER

Normally, clean air cleaner after every 25 operating hours. More frequent cleaning is required when mower is operated in dusty or dirty conditions.

1. Stop engine and pull wire off spark plug (Fig. 18). Remove key from switch (key start model).

2. Rotate knob securing air cleaner cover to engine until cover can be removed. Clean cover thoroughly (Fig. 17).

3. If outside of foam element is dirty, remove it from air cleaner body (Fig. 17). Clean thoroughly.

A. WASH foam element in a solution of liquid soap and warm water. Squeeze to remove dirt, but do not twist because foam may tear. Rinse thoroughly in clear water.

B. DRY by wrapping in a clean rag. Squeeze rag and foam element to dry.

C. SATURATE element with approximately 5 ounces (150 ml) of SAE 30 engine oil. Squeeze element to remove excess oil and to distribute oil thoroughly. A damp element is desirable.

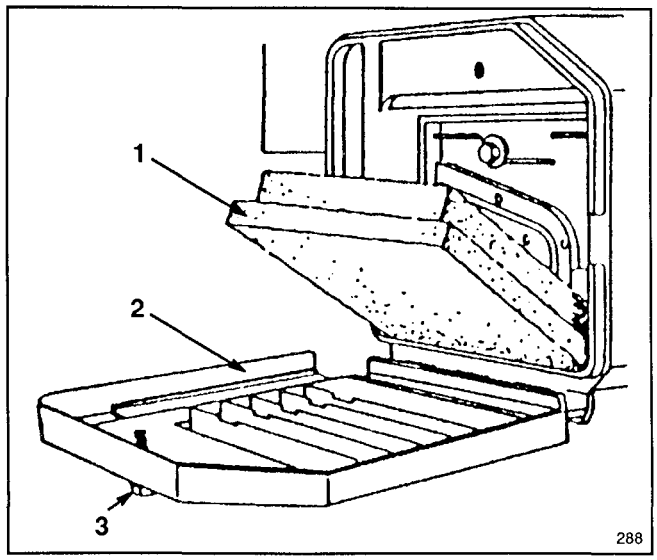

Figure 17

1. Foam element **2. Cover** **3. Knob**

4. Reinstall foam element and air cleaner cover.

MAINTENANCE

IMPORTANT: Do not operate engine without air cleaner element because extreme engine wear and damage will likely result.

REPLACING SPARK PLUG

Use a CHAMPION RC12YC spark plug or equivalent. Correct air gap is 0.030" (0.76 mm). Remove plug after every 25 operating hours and check its condition.

1. Stop engine and pull wire off spark plug (Fig. 18). Remove key from switch (key start model).

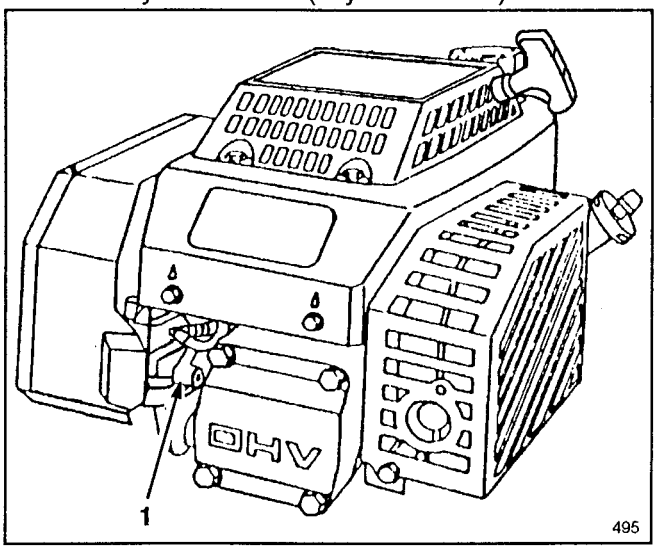

Figure 18

1. Spark plug wire

2. Clean around spark plug and remove plug from cylinder head.

IMPORTANT: Replace a cracked, fouled, or dirty spark plug. Do not sand blast, scrape, or clean electrodes because engine damage could result from grit entering cylinder.

3. Set air gap at 0.030" (0.76 mm) (Fig. 19). Install correctly gapped spark plug and gasket seal. Tighten plug firmly to 14 ft-lb (19 N·m).

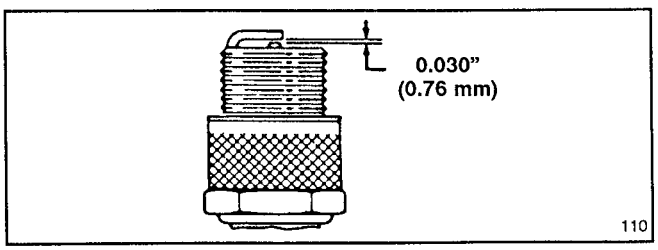

Figure 19

DRAINING GASOLINE

1. Stop engine and wait for engine to cool. Pull wire off spark plug (Fig. 18). Remove key from switch (key start model).

Note: Drain gasoline from a cold engine only.

2. Remove cap from fuel tank and use pump-type syphon to drain fuel into clean gas can.

Note: This is the only procedure recommended for draining fuel.

CHANGING CRANKCASE OIL

Change oil after the first 2 operating hours and after every 25 hours thereafter. Since warm oil drains better and carries more contaminants than cold, run engine for a minute or so before draining oil.

1. Stop engine and pull wire off spark plug (Fig. 18). Remove key from switch (key start model).

2. Remove grass bag. Drain gasoline from fuel tank: refer to Draining Gasoline, page 11.

3. Remove dipstick from oil fill tube and place a drain pan next to left side of mower.

4. Tip mower on its left side, allowing oil to drain into drain pan (Fig. 20).

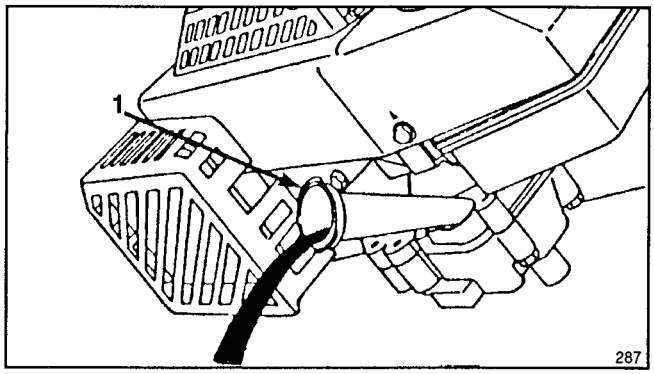

Figure 20

1. Oil fill tube

5. When oil is drained, return mower to upright position and add fresh oil to engine. Refer to Fill Crankcase With Oil, page 4.

ADJUSTING THROTTLE

Throttle control adjustment may be required if engine does not start or stop. Whenever a new throttle control cable is installed, throttle must be adjusted.

1. Stop engine and pull wire off spark plug (Fig. 18). Remove key from switch (key start model).

2. Move throttle control to (FAST position).

3. Loosen cable clamp screw until throttle cable slides (Fig. 21).

4. Move throttle cable left or right until holes in throttle lever and throttle bracket align (Fig. 21).

5. Pull throttle cable slightly to remove any slack and tighten cable clamp screw to lock adjustment in place.

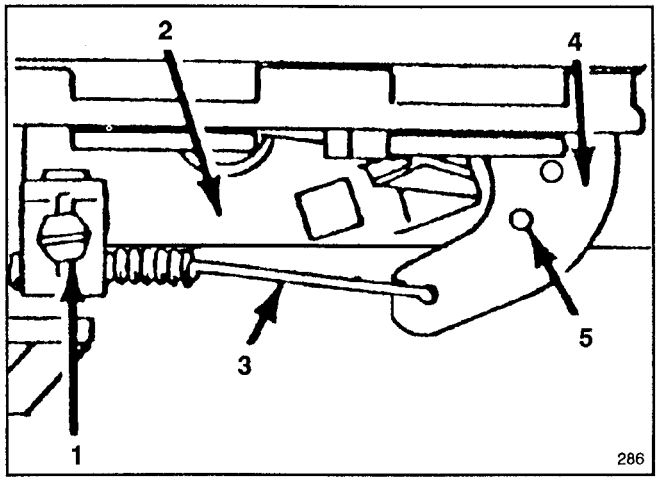

Figure 21

1. Cable clamp screw
2. Throttle bracket
3. Throttle cable
4. Throttle lever
5. Aligned holes

ADJUSTING WHEEL DRIVE

If mower does not self-propel or self-propels when control bar is **more** than 1-1/2 inches from the handle, adjust wheel drive control knob on rear of gear box.

1. If necessary, remove grass bag.

2. ADJUSTMENT (Fig. 22) – Rotate control knob clockwise 1/2 turn if mower does not self-propel. If mower creeps forward, rotate knob 1/2 turn counter-clockwise to loosen belt.

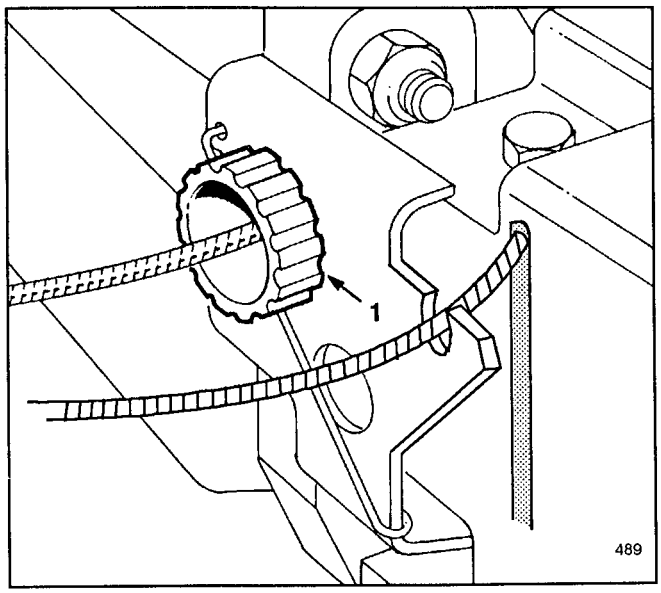

Figure 22

1. Control knob

3. CHECK ADJUSTMENT – Adjustment is correct when control bar is about 1-1/2 inches from handle (Fig. 23) and wheels start to turn freely.

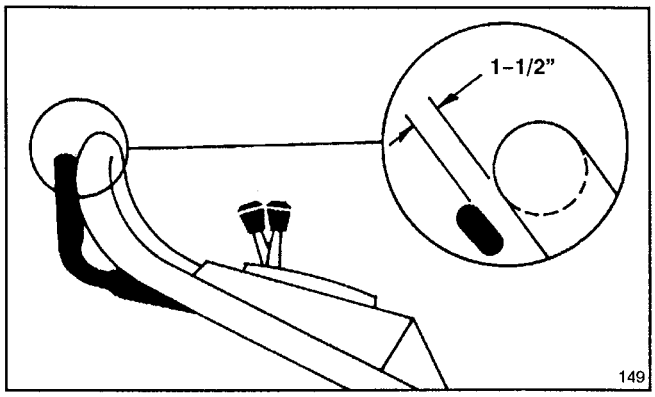

Figure 23

4. Repeat steps 2 and 3 until properly adjusted.

INSPECTING/REMOVING/SHARPENING BLADE

Always mow with a sharp blade. A sharp blade cuts cleanly and without tearing or shredding the grass blades like a dull blade.

1. Stop engine and pull wire off spark plug (Fig. 18). Remove key from switch (key start model).

2. Drain gasoline from fuel tank; refer to Draining Gasoline, page 11.

3. Tip mower on its left side (Fig. 24).

4. INSPECTING BLADE – Carefully examine blade for sharpness and wear, especially where flat and curved parts meet (Fig. 25A). Since sand and abrasive material can wear away the metal that connects the flat and curved parts of the blade, check blade before using the mower. If a slot or wear is noticed, (Fig. 25B & C), replace blade. Refer to step 5.

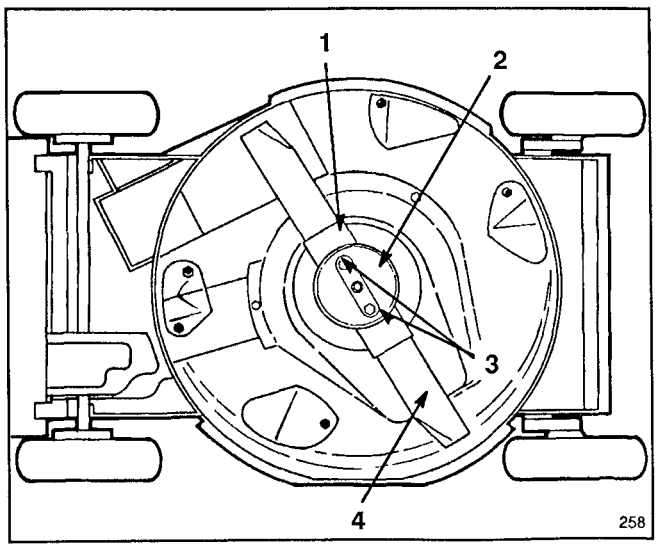

Figure 24

1. Blade stiffener
2. Anti-scalp cup
3. Blade nuts
4. Blade

MAINTENANCE

⚠ DANGER

- **A worn or damaged blade could break and a piece of blade could be thrown into operator's or bystander's area.**
- **A thrown piece of blade could cause serious personal injury or death to operator or bystanders.**
- **Inspect blade periodically for wear or damage.**
- **Replace a worn or damaged blade.**

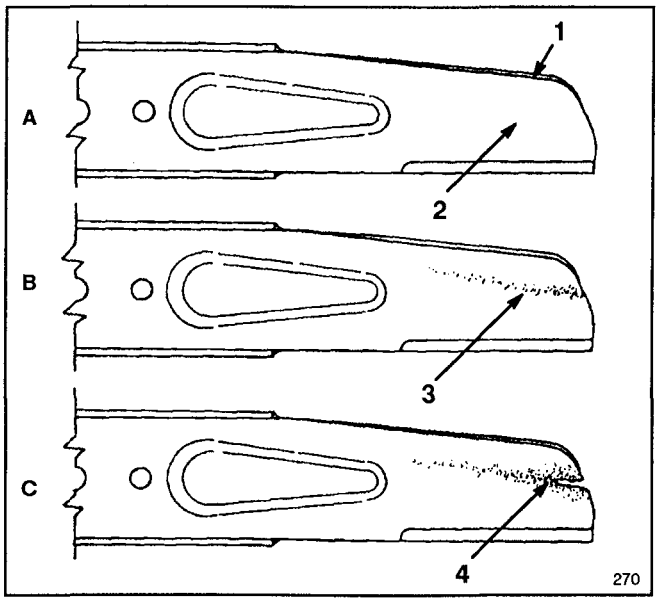

Figure 25

1. **Sail**
2. **Flat part of blade**
3. **Wear**
4. **Slot formed**

5. REMOVING BLADE—Grasp end of blade using a rag or thickly padded glove. Remove (2) blade nuts, anti-scalp cup, blade stiffener, and blade (Fig. 24).

NOTE: For best performance, install new blade before cutting season begins. During the year, file down small nicks to maintain the cutting edge.

6. SHARPENING BLADE—Using a file, sharpen top side of blade (side facing mower housing) and maintain original cutting angle (Fig. 26). The blade will remain balanced if the same amount of material is removed from both cutting edges.

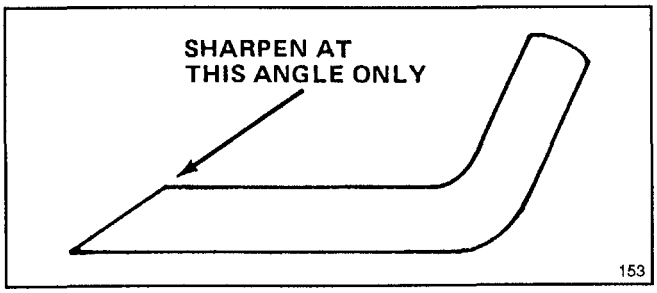

Figure 26

IMPORTANT: Check balance of blade by putting it on a blade balancer. An inexpensive balancer can be purchased at a hardware store. A balanced blade will stay in a horizontal position and an unbalanced blade will settle to the heavy side. If the blade is not balanced, file more metal off cutting edge on heavy end of blade.

7. Install sharp, balanced Toro blade, blade stiffener, anti-scalp cup, and (2) blade nuts. Sail part of blade must point toward top of mower housing to assure correct installation. Tighten the blade nuts to 15-27 ft-lb (20-37 N·m).

LUBRICATION

After every 25 operating hours or when season ends, front and rear wheels must be lubricated.

1. Apply 2 or 3 drops of light oil on inside and outside of all wheel bolts. Spin wheels to distribute oil into bushings. Wipe up excess oil.

2. Move rear wheel height-of-cut levers to "C" setting. Wipe grease fittings with clean rag (Fig. 27). Install grease gun onto fitting and gently apply two or three pumps of #2 Multi-Purpose Lithium Base Grease.

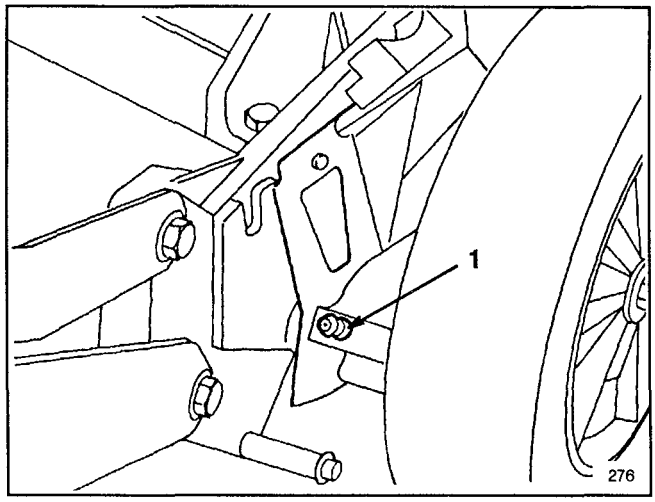

Figure 27

1. **Grease fitting**

ADJUSTING BLADE BRAKE

Whenever a new blade brake cable assembly is installed, an adjustment is required.

1. Stop engine and pull wire off spark plug (Fig. 18). Remove key from switch (key start model).

2. Loosen cable clamp screw until brake cable conduit slides (Fig. 28). Pull cable to remove slack, but do not put tension on spring. Tighten screw to lock adjustment in place.

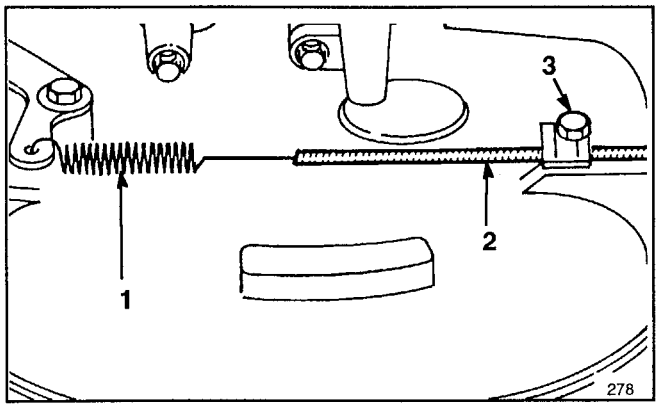

Figure 28

1. Spring 2. Cable conduit 3. Cable clamp screw

CHARGING BATTERY (key start model)

Although a new battery is not fully charged, a partial charge of 4 hours provides enough energy for several starts. However, a new battery must be charged for 72 continuous hours to ensure full charge. Also charge battery for 72 hours when mower is stored and in the spring. During normal operation, engine alternator keeps battery charged.

1. Stop engine and disconnect wire harness from battery terminal (Fig. 29).

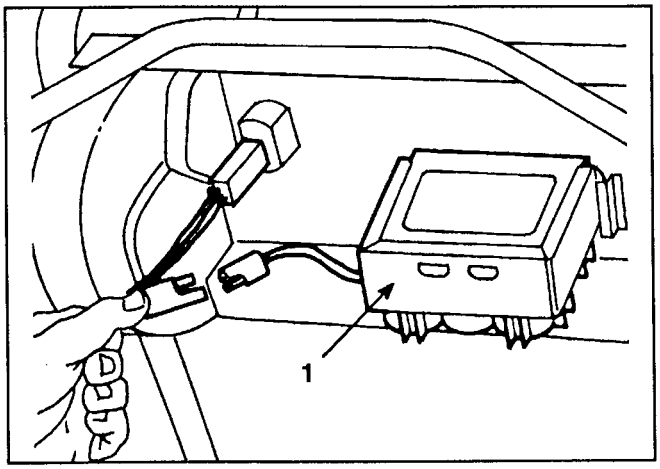

Figure 29

1. Battery

2. If desired, battery can be removed by sliding it out of mounting slots. However, removal is not required if mower can be positioned near an electrical outlet.

3. Connect TORO electro charger to battery and plug into 120VAC power outlet. After charging battery for specified time, unplug charger and disconnect from battery.

4. Connect wiring harness to battery terminal.

IMPORTANT: Only the TORO electro charger is recommended because other chargers could damage the battery. Always use charger indoors and charge battery at room temperature (+70° F) whenever possible. Do not charge battery longer than 72 hours because damage could result.

CLEANING MOWER HOUSING, DISCHARGE TUNNEL, BELT COVER AND PLUG

To ensure best performance, the discharge tunnel plug must be cleaned after each use. When grass is thick and lush, clippings may collect on and around the plug; this may make plug removal difficult. After each use, remove plug from discharge tunnel and clean off all debris.

Keep underside of mower housing clean. Be especially careful to keep kickers on underside of mower housing free of debris (Fig. 30).

Always be sure that discharge tunnel door locks closed when handle is released. If debris prevents discharge door from locking closed, clean inside of discharge tunnel and door thoroughly.

1. Stop engine and pull wire off spark plug. Remove key from switch (key start model).

2. Tip mower on its left side (Fig. 30). Avoid rotating blade because starting problems may result.

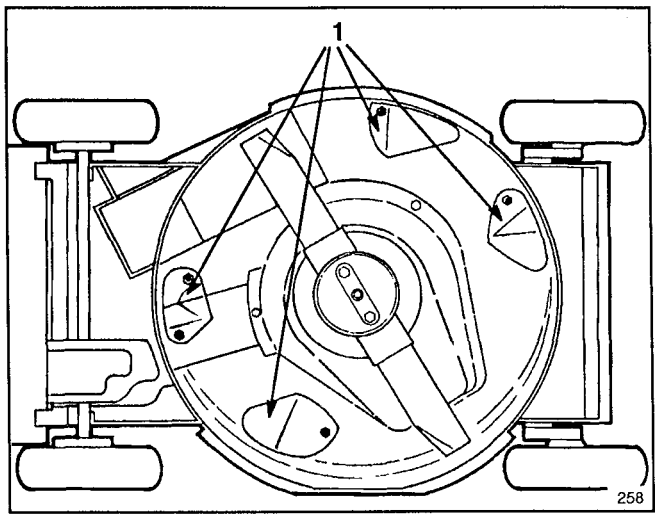

Figure 30

1. Kicker plates

3. Remove dirt and grass clippings that stick to housing with a hardwood scraper. Avoid burrs and sharp edges.

4. Turn mower upright.

5. Remove debris from inside of discharge tunnel.

6. Remove screws securing belt cover (Fig. 31) to mower housing. Lift off cover and brush out all debris from belt area. Reinstall belt cover.

7. Clean discharge tunnel plug.

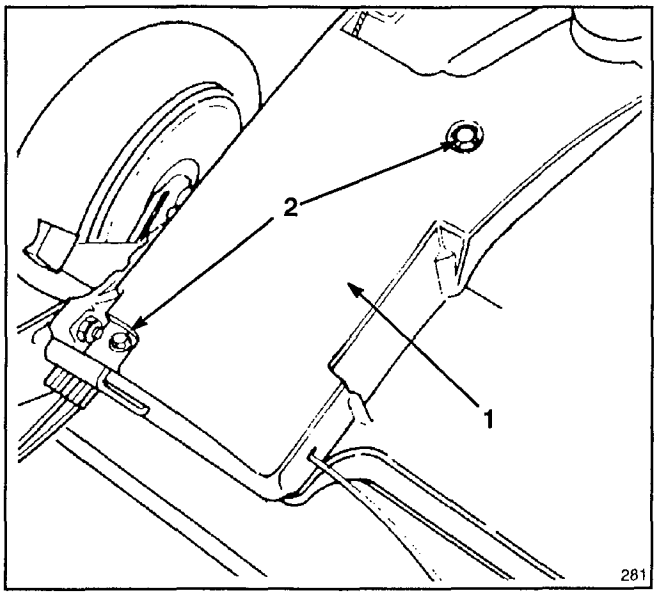

Figure 31

1. Belt cover
2. Screws

CLEANING BLADE BRAKE CLUTCH SHIELD

The BBC (Blade Brake Clutch) shield should be cleaned periodically during the mowing season and at the end of each mowing season to ensure best performance and to prevent parts degradation.

1. Stop engine and pull wire off spark plug (Fig. 18). Remove key from switch (key start model).

2. Drain gasoline from fuel tank; refer to Draining Gasoline, page 11.

3. Tip mower on its left side.

4. Remove (2) blade nuts, anti-scalp cup, blade stiffener, blade, blade spacer, and (3) bolts and washers securing BBC shield to mower deck (Fig. 32).

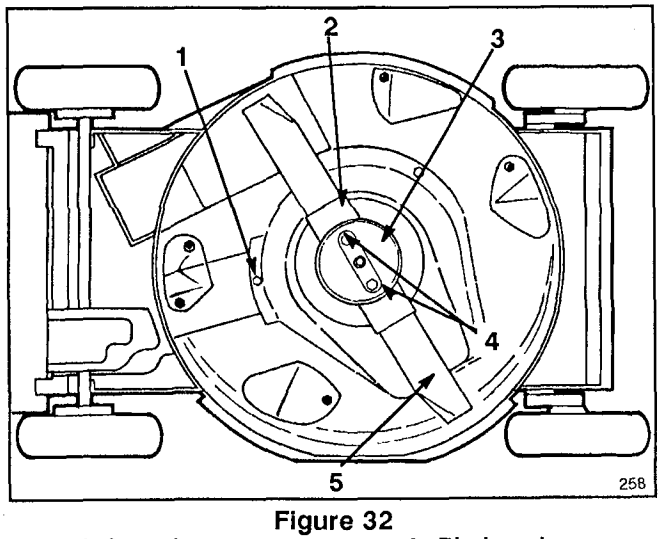

Figure 32

1. Bolt & washer
2. Blade stiffener
3. Anti-scalp cup
4. Blade nuts
5. Blade

5. Brush or blow debris from inside of shield.

6. Reinstall BBC shield with (3) bolts and washers, blade spacer, blade, blade stiffener, anti-scalp cup, and (2) blade nuts.

7. Reinstall spark plug wire.

PREPARING MOWER FOR STORAGE

1. For long term storage, either drain gasoline from fuel tank or add a fuel stabilizer to the gasoline. To drain gasoline, refer to Draining Gasoline, page 11. After fuel is drained, start engine and let it idle until all fuel is consumed and engine stops. Repeat the starting procedure two more times to assure all gas is removed from the engine. If gasoline is not drained, gum-like varnish deposits will form and cause poor engine operation, even starting problems.

Fuel can be left in gas tank only if a fuel additive, such as Toro's Stabilizer/Conditioner, is added to gasoline and run through engine before storing. Toro's Stabilizer/Conditioner is a petroleum distillate based conditioner/stabilizer. Toro does not recommend stabilizers with an alcohol base, such as ethanol, methanol or isopropyl. Use fuel additive in recommended quantities as specified on container.

Under normal conditions, fuel additives remain effective in fuel for 6-8 months.

2. Drain oil: refer to Changing Crankcase Oil, page 11. After oil is drained, do not fill crankcase with oil until the following steps (3-13) are completed.

3. Remove spark plug and pour 2 tablespoons of SAE 30 oil into hole in cylinder. Pull starter rope slowly to coat inside of cylinder. Install spark plug and tighten to 14 ft-lb (19 N·m). **DO NOT REINSTALL WIRE ON SPARK PLUG.**

4. Clean mower housing: refer to Cleaning Mower Housing, Discharge Tunnel, Belt Cover and Plug, page 14.

5. Clean BBC shield: refer to Cleaning Blade Brake Clutch Shield, page 15.

6. Check condition of blade: refer to Inspecting/Removing/Sharpening Blade, page 12.

7. Tighten all nuts, bolts, and screws.

8. Clean dirt and chaff from cylinder, cylinder head fins, and blower housing. Also remove grass clippings, dirt, and grime from external parts of the engine, shrouding, and top of mower housing.

9. Clean air cleaner: refer to Servicing Air Cleaner, page 10.

10. Lubricate the wheels: refer to Lubrication, page 13.

MAINTENANCE

11. Charge battery (key start model): refer to Charging Battery, page 14.

12. Touch up all rusted or chipped paint surfaces. Toro Re-Kote paint is available from an Authorized TORO Service Dealer.

13. Fill crankcase with oil: refer to Fill Crankcase With Oil, page 4.

14. Store mower in a clean, dry place. Cover mower to keep it clean and protected.

OPTIONAL EQUIPMENT

For special conditions the following accessories may be purchased at your local authorized TORO Service Dealer.

1. Side Discharge Kit, Model No. 59168—Installs in seconds. Rear mounted in place of the grass bag. Disperses clippings while trimming on both sides (Fig. 33).

2. Spark Arrestor, Briggs & Stratton Part No. 77-9040—If a spark arrestor is required because of local, state, or federal regulations, it may be purchased from an Authorized Toro Service Dealer. If mower is operated on any California forest, brush, or grass covered land without a properly operating spark arrestor, the operator is violating state law, Section 4442 Public Resources Code.

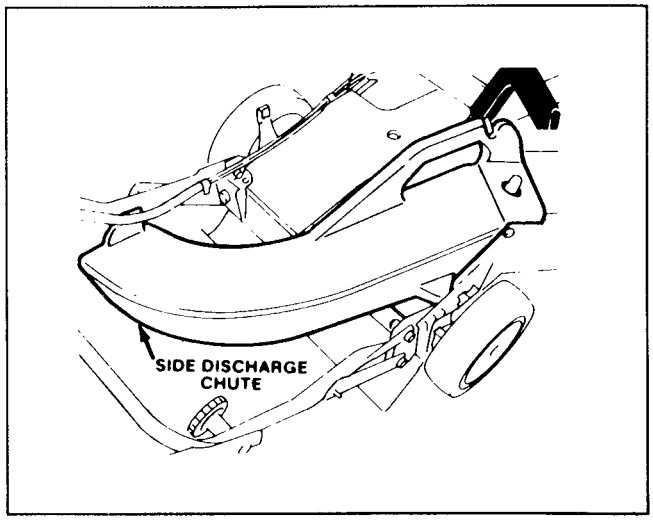

Figure 33

PRODUCT IDENTIFICATION

A model and a serial number decal is located on the underside of the control panel. Always refer to specific numbers on this decal in correspondence or when replacement parts are needed.

TORO SERVICE SUPPORT

If help - concerning safety, set-up, operation, maintenance, or troubleshooting - is ever needed, contact the local Authorized TORO Service Dealer or Distributor. Refer to the "Yellow Pages" for assistance. In addition to skilled service technicians, the dealer and distributor have factory approved accessories and replacement parts. Keep your Toro all TORO. Buy genuine TORO replacement parts and accessories.

PROTOTYPE


TORO®