FORM NO. 3320–697

TORO

MODEL NO. 20326 – 2000001 & UP

OPERATOR'S MANUAL

21" RECYCLER ®
MOWER

⚠ SAFETY INSTRUCTIONS

WARNING: Engine exhaust contains carbon monoxide which is an odorless, deadly poison. Carbon monoxide is also known to the State of California to cause birth defects. Do not run engine indoors or in an enclosed area.

BEFORE OPERATING

1. Read this manual carefully before operating the mower. Become familiar with the controls and proper use of the mower. Never allow children to operate the mower or adults to operate it without proper instructions.

2. Keep everyone, especially children and pets, away from area of operation. Thoroughly inspect area where mower will be used and remove sticks, stones, wire, and debris.

3. Wear long pants and substantial shoes. Do not operate mower while wearing open–toed shoes, jewelry, loose clothing or when barefoot.

4. Check fuel level before starting engine. Do not fill fuel tank indoors, when the engine is running, or until engine cools for several minutes after running. Wipe up spilled gasoline before starting engine.

5. Keep all guards, shields, discharge tunnel plug, grass catcher, optional side discharge chute and safety devices in place. Repair or replace damaged parts, including decals. Check all safety devices before each use.

6. Engine and blade are designed to stop when control bar is released. Ensure engine kill control bar and brake function properly before each use of mower.

WHILE OPERATING

7. Do not run engine indoors.

8. Always maintain secure footing. Keep a firm grip on the handle and walk; never run. Never operate mower in wet grass. Mow only in daylight or in good artificial light.

9. Mow across the face of slopes; never up and down. Use extreme caution when changing direction on slopes. Do not mow excessively steep slopes.

10. Always wear safety glasses or eye shields during operation to protect eyes from foreign objects that may be thrown from the machine. Keep face, hands, and feet away from the mower housing and cutter blade when the engine is running. Stay behind the handle until the engine stops.

11. When bagging grass, stop engine and ensure discharge door is closed before the bag is removed and emptied.

12. Shut engine off and wait for all moving parts to stop before unclogging discharge tunnel, removing grass bag or discharge tunnel plug.

13. Since the blade rotates for a few seconds after the engine kill control bar is released, stay behind the handle until all moving parts stop.

14. After striking a foreign object or if mower vibrates abnormally, stop engine and remove wire from spark plug. Check mower for damage and make all repairs before using mower again.

15. Stop the engine before adjusting the height–of–cut.

16. Stop the engine when crossing a gravel driveway, road, or sidewalk.

17. Stop engine before leaving the operator's position—behind the handle. Disconnect wire from spark plug if mower will be unattended or not used.

18. Do not touch engine while it is running or shortly after it is stopped because engine will be hot enough to cause a burn.

19. Refuel only after engine is cool.

MAINTENANCE

20. Perform only those maintenance instructions described in this manual. If major repairs are ever needed or if assistance is desired, contact your local Authorized TORO Service Dealer.

21. Before mower is cleaned, inspected, serviced, or adjusted, stop engine and disconnect wire from spark plug. Keep wire away from plug to prevent accidental starting.

22. To ensure the mower is in safe operating condition, frequently check and keep all nuts, bolts, and screws tight. Ensure blade bolt is tightened 50 ft–lb (68 N·m).

23. To reduce fire hazard, keep engine free of excessive grease, grass, leaves, and accumulations of dirt.

©The Toro Company–1992

SAFETY INSTRUCTIONS

24. Check grass catcher bag frequently for wear or deterioration. Replace with a new bag for your protection. Check that replacement bags comply with TORO's original recommendations or specifications.

25. Allow engine to cool before storing mower in any enclosure. Do not store mower near any open flame or where gasoline fumes may be ignited by a spark.

26. Do not overspeed the engine by changing governor settings.

27. At the time of manufacture, the mower conformed to the safety standards in effect for rotary mowers. To assure optimum performance and continued safety certification of the mower, use genuine TORO replacement parts and accessories. Replacement parts and accessories made by other manufacturers may result in non–conformance with the safety standards, and that could be dangerous.

SAFETY SYMBOL GLOSSARY



Safety alert



Read and understand operator's manual



Keep hands/feet away from blade

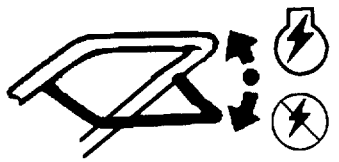

Squeeze control bar against handle to drive



Stop engine before leaving operator position

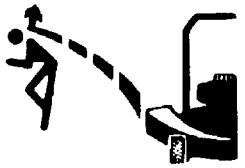

Keep all guards in place

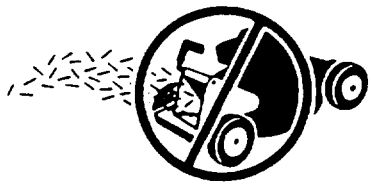

Never open chute on mower when engine is running, unless grass bag or optional side discharge attachment is installed



Keep bystanders from mowing area



Choke on



Engine speed (Throttle)



Slow



Fast



Locked



Unlocked

TABLE OF CONTENTS

	Page
Set–Up Instructions	3
Before Operating	4
Recycler® Mower Tips	5
Operating Instructions	6
Maintenance	9
Servicing Air Cleaner	9
Replacing Spark Plug	9
Draining Gasoline	9
Adjusting Throttle	9
Inspecting/Removing/Sharpening Blade	10
Lubrication	11
Adjusting Brake Cable	11
Cleaning Mower Housing, Discharge Tunnel and Plug	11
Preparing Mower For Storage	11
Optional Equipment	12
Product Identification	12
Toro Service Support	12
The Toro Starting Guarantee	13
Guaranteed To Start Maintenance Record	15
The Toro Total Coverage Guarantee	

SET–UP INSTRUCTIONS

INSTALL HANDLE

1. Align handle and tighten handle knobs (Fig. 1). Move handle latches slightly outward so they will not be in the way when pivoting the handle backward into the operating position (Fig. 1).

2. Pivot handle backward. Move handle latches inward while snapping handle stud into center hole of handle latch (Fig. 1). If a handle latch does not fit tightly against the handle tube, remove latch from handle stud, bend the latch inward, and reattach to handle stud. Repeat as necessary to ensure a tight fit between latch and handle.

Note: If handle height is not satisfactory, adjust by placing handle stud (Fig. 1) into a different hole.

3. Ensure control cables (Fig. 1) are to the rear and inside of handles. Secure cables to handle with cable ties. Tighten handle knobs securely.

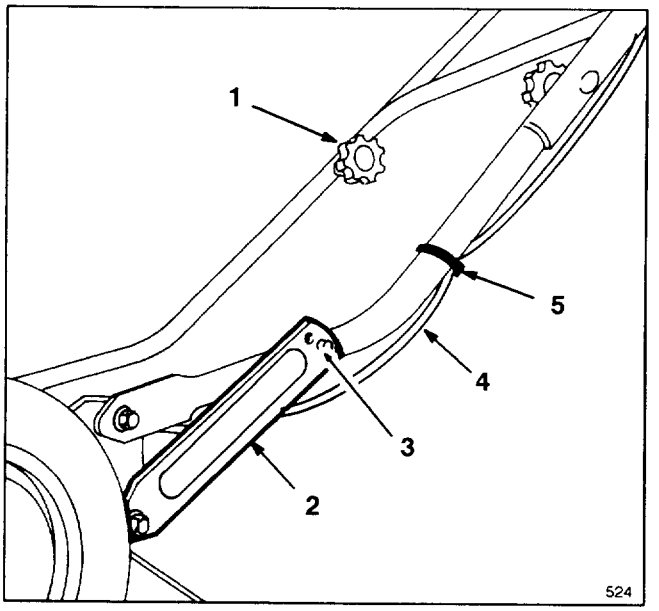

Figure 1

1. **Handle knob**
2. **Handle latch**
3. **Handle stud**
4. **Control cable**
5. **Cable tie**

INSTALL DISCHARGE TUNNEL PLUG

1. Make sure engine is off.

2. Open the discharge door by pulling forward on the handle and moving it rearwards (Fig. 2). Hold the discharge door handle to prevent the spring–loaded door from closing while inserting the plug.

3. Since the plug is slightly wider than the discharge tunnel opening, rotate the plug clockwise slightly while inserting it (Fig. 2). Make sure the arrow on the plug decal is pointing upwards.

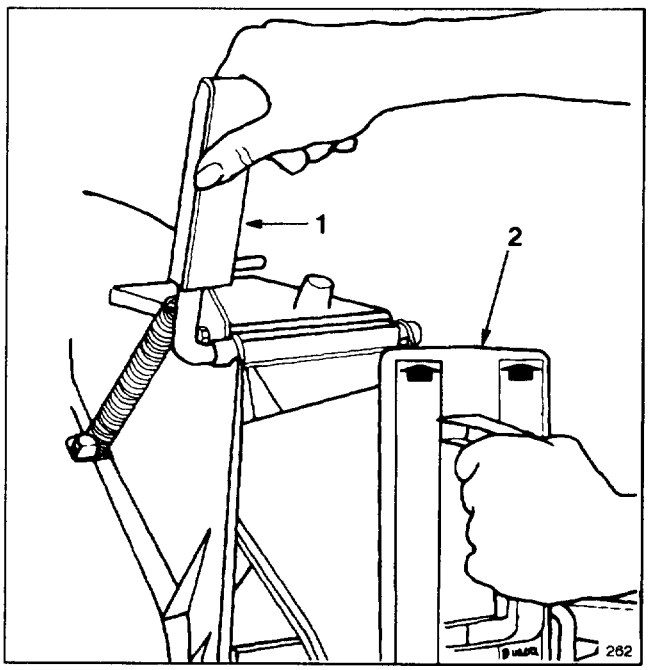

Figure 2

1. **Discharge door handle**
2. **Plug rotated clockwise**

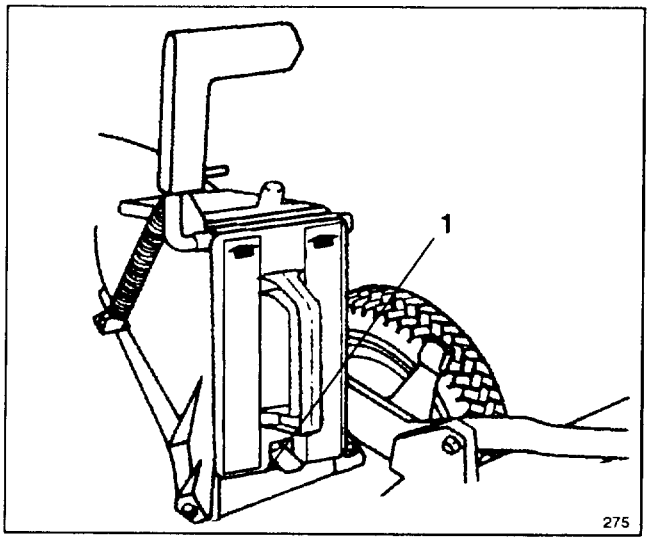

Figure 3

1. **Spring clip**

4. Push the plug all the way in until the spring clip on the bottom of the plug clicks into place, locking the plug securely into the discharge tunnel (Fig. 3). Release discharge door handle to lock top of plug.

BEFORE OPERATING

WARNING

DANGER: Gasoline is extremely flammable and explosive under certain conditions. Do not smoke when handling fuel and keep fuel far away from open flames and sparks. Never buy more than a 30 day supply of gasoline. Store it in an approved container. Keep gasoline out of reach of children.

Refuel outdoors and only when engine is cold. Do not fill tank full. Fill tank to within 1/4" to 1/2" (6 to 13 mm) from top of filler neck, not into filler neck. This space is for expansion of fuel. Use funnel or spout to prevent spilling. Wipe up any spilled gas.

MIX GASOLINE AND OIL (Fig. 4)

1. APPROVED OIL—For simplicity and best engine performance, mix the contents of one bottle of Toro 50:1 Two-Cycle Oil with two gallons of fresh, unleaded regular gasoline. Leaded regular gasoline may be used if unleaded regular is not available.

Toro Two-Cycle Oil is specially formulated to provide superior lubrication, make starting easy, and prolong engine life. If Toro Two-Cycle Oil is not available, mix two gallons of gasoline and 5.2 ounces of another high grade two-cycle oil that has the NMMA or BIA-TCW certification printed on the label.

IMPORTANT: YOU CAN ALSO USE TORO "EASY MIX" TWO-CYCLE OIL (3.2 OUNCE BOTTLE MIXED ONE PER GALLON OF GASOLINE) IN THIS TORO TWO-CYCLE ENGINE.

NEVER USE AUTOMOTIVE OIL (i.e. SAE 30, 10W30 etc.), TWO-CYCLE OIL THAT IS NOT CERTIFIED NMMA/BIA-TCW, OR THE WRONG MIX RATIO BECAUSE THE ENGINE CAN BE DAMAGED, AND IT WOULD NOT BE COVERED BY THE TORO WARRANTY.

Toro also recommends that Toro Stabilizer/Conditioner be used regularly in all Toro gasoline powered products during operation and storage seasons. Toro Stabilizer/Conditioner cleans the engine during operation and prevents gum-like varnish deposits from forming in the engine during periods of storage.

2. Mixing Gasoline and Oil—Pour a half gallon of gasoline into an approved gasoline container and add the correct amount of two-cycle oil. Install cap on gasoline container and shake the container to mix oil and gas thoroughly. Remove cap and add remaining amount of gasoline.

IMPORTANT: NEVER USE METHANOL, GASOLINE CONTAINING METHANOL, GASOHOL CONTAINING MORE THAN 10% ETHANOL, PREMIUM GASOLINE, OR WHITE GAS BECAUSE ENGINE FUEL SYSTEM DAMAGE COULD RESULT.

DO NOT USE FUEL ADDITIVES OTHER THAN THOSE MANUFACTURED FOR FUEL STABILIZATION DURING STORAGE SUCH AS TORO'S STABILIZER/CONDITIONER OR A SIMILAR PRODUCT. TORO'S STABILIZER/CONDITIONER IS A PETROLEUM DISTILLATE BASED CONDITIONER/STABILIZER. TORO DOES NOT RECOMMEND STABILIZERS WITH AN ALCOHOL BASE SUCH AS ETHANOL, METHANOL OR ISOPROPYL. ADDITIVES SHOULD NOT BE USED TO TRY TO ENHANCE THE POWER OR PERFORMANCE OF MACHINE.

NOTE: Do not mix gasoline and oil in the product fuel tank. Oil that is at room temperature mixes easier and more thoroughly than cold oil.

50:1 GAS/OIL Mixing Chart

U.S. GALLON	
Gasoline	**Oil**
1 gallon	2.6 oz.
2 gallon	5.2 oz.

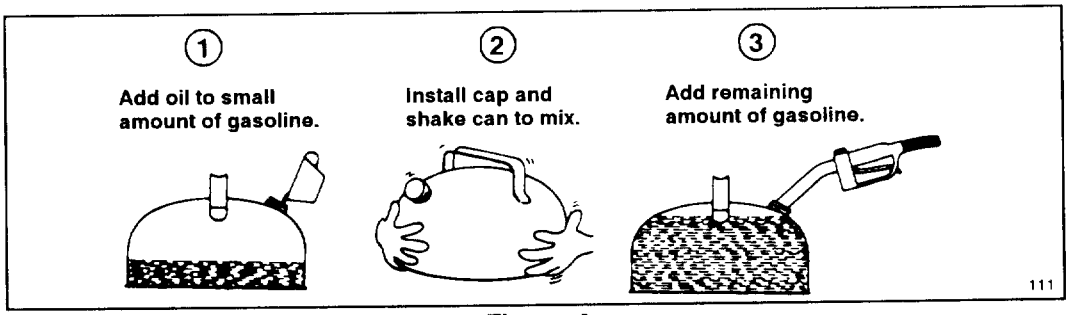

Figure 4

RECYCLER® MOWER TIPS

RECYCLER® MOWER FEATURES

Your Toro Recycler® mower has a new and completely different cutting concept; it leaves your lawn with a bagged look without bagging clippings.

The mower is equipped with special parts which increase your mower's ability to cut and recut grass clippings, leaves, and other yard debris into tiny particles which are injected down into the grass. These parts are:

- A special blade and blade stiffener
- Four "kicker plates" positioned on the underside of the mower deck in strategic positions (Fig. 5)

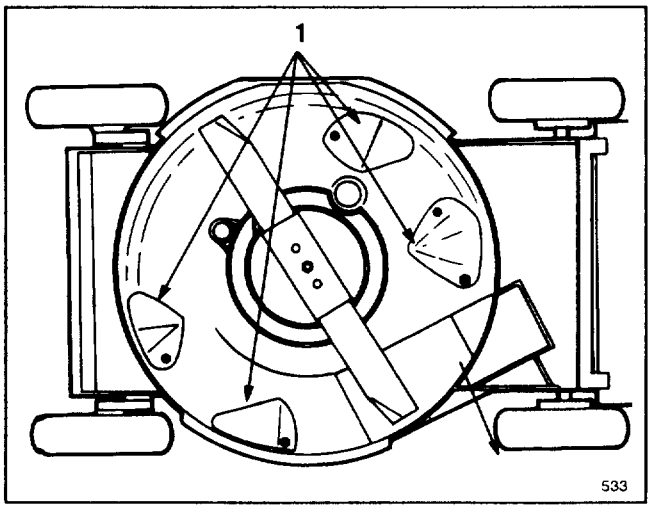

Figure 5

1. Kicker plates

- A plug which locks into the mower's discharge tunnel (a fifth kicker is on the plug) (Fig. 6)

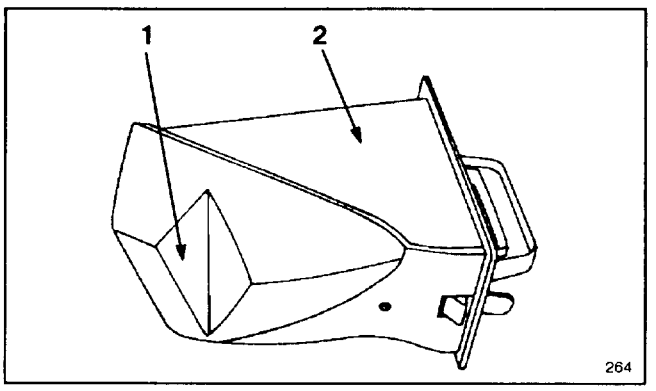

Figure 6

1. Kicker 2. Plug

The blade and four kicker plates are permanent parts of your mower. Remove the blade only for sharpening or replacement. Never remove the kickers, unless they need to be replaced. They do not interfere with the normal bagging or optional side discharge operations of the mower.

The plug, however, is a removable part, just as the grass bag and optional side discharge chute are removable parts. You cannot use the plug in combination with either the grass bag or the optional side discharge chute.

It is possible to mow without using the plug by closing the discharge tunnel door. However, your lawn appearance will be much more satisfactory if you use the plug as it has an additional kicker (Fig. 6) that helps drive the clippings down into the grass.

⚠ WARNING

- **Grass clippings and other objects can be thrown from an open discharge tunnel.**
- **Thrown objects can cause serious injury or kill operator or bystanders.**
- **Never start or operate the mower unless one of the following is true:**

  1. The discharge tunnel plug is locked securely in discharge tunnel.

  2. The grass bag is locked in place.

  3. The optional side discharge chute is locked in place.

  4. The discharge tunnel door is locked closed.

⚠ WARNING

- **Wet grass can cause you to slip and contact blade.**
- **Blade contact can seriously injure you.**
- **Mow only in dry conditions.**

TIPS FOR CUTTING GRASS

Even with the Recycler® mower, you may encounter conditions where it is not possible to hide all of the grass clippings or leaves all of the time down in the lawn. Follow these instructions for the best cutting results and lawn appearance:

- Maintain a **sharp blade** throughout the cutting season. Periodically file down nicks on blade.
- Clean any residue from the underside of mower housing and kickers after each use. See Cleaning Mower Housing, Discharge Tunnel and Plug, page 11.
- When cutting grass over 6 inches tall, you may want to cut the lawn twice to hide clippings down in the grass.

RECYCLER® MOWER TIPS

- In the heat of the summer, it is best to cut grass at the C, D or E height-of-cut settings. Cut only about 1/3 of the grass blade. Cutting below the C setting is not recommended unless grass is sparse or it is late fall when grass growth begins to slow down. When cutting long grass, you may need to use a higher height–of–cut setting and a slower walking speed; then recut the grass at a more normal setting. If grass is too long and leaves clumps on top of lawn, mower may plug and cause engine to stall.
- Alternate mowing direction. This helps disperse clippings over lawn for even fertilization.

If the lawn appearance is not satisfactory after mowing, try one or more of the following:

- Sharpen the blade.
- Walk at a slower pace while mowing.
- Raise the height-of-cut setting on your mower.
- Cut your grass more frequently.
- Overlap cutting swaths instead of cutting a full swath with each pass.
- Mow across the marginal areas a second time.
- Set height–of–cut on front wheels one notch lower than rear wheels. (example: set front wheels at "C" setting and rear wheels at "D" setting)

TIPS FOR CUTTING LEAVES

You can cut up leaves in the fall instead of bagging. If you decide to bag, the Recycler® mower reduces the number of leaf bags you will need by finely chopping up the leaves before they are bagged. Some leaf particles will be injected back down into the soil. When spring arrives, the leaf particles will have decomposed and returned valuable nutrients to the soil.

- Ensure leaves are dry.
- When cutting is complete, always be sure that 50% of the lawn shows through the cut leaf cover. This may require one or more passes over the leaves.
- For light leaf coverage, mow with all wheels at the same height-of-cut setting.
- If there are more than 5 inches of leaves on lawn, set the front wheels one or two notches higher than the rear wheels. This makes it easier to feed leaves under mower deck.
- Walk at a slower mowing speed if leaves are not cut up finely enough to be hidden down in the grass.
- If you cut up a lot of oak leaves, you might want to add lime to your grass in the spring. Lime reduces the acidity of oak leaves.

OPERATING INSTRUCTIONS

STARTING AND STOPPING

1. CONTROLS—Throttle, control bar and fingertip starter are on upper handle (Fig. 7).

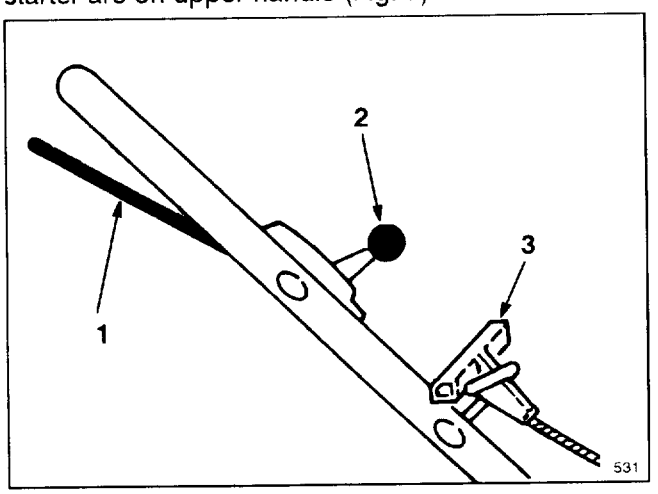

Figure 7

1. Control bar 2. Throttle 3. Fingertip starter

2. Push spark plug wire onto spark plug (Fig. 13).

3. STARTING—Move throttle to ⚑ (CHOKE) (Fig. 7). Cover hole in center of primer with thumb and push once (Fig. 13). Lift control bar to handle and hold. Pull fingertip starter out until positive engagement results; then pull vigorously to start the engine. After engine starts, remove throttle from ⚑ (CHOKE) and regulate as desired.

NOTE: When starting a warm engine, CHOKE and PRIMER may not be necessary.

4. STOPPING—Release control bar to stop engine and blade. Pull wire off spark plug if mower will be unattended or not used.

USING DISCHARGE TUNNEL PLUG

1. Make sure engine is off. Open the discharge door by pulling forward on the handle and moving it rearward (Fig. 8). Hold the discharge door handle to prevent the spring–loaded door from closing while inserting the plug.

2. Since the plug is slightly wider than the discharge tunnel opening, you must rotate the plug clockwise slightly while inserting it (Fig. 8). Make sure the arrow on the plug decal is pointing upward.

3. Push the plug all the way in until the spring clip on the bottom of the plug clicks into place, locking the plug securely into the discharge tunnel (Fig. 9). Release the discharge door handle to lock the top of the plug.

OPERATING INSTRUCTIONS

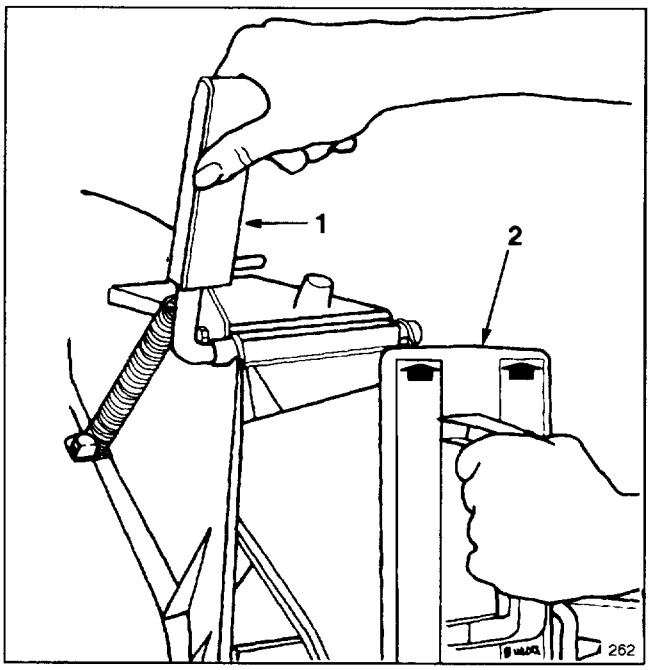

Figure 8

1. Discharge door handle 2. Plug rotated clockwise

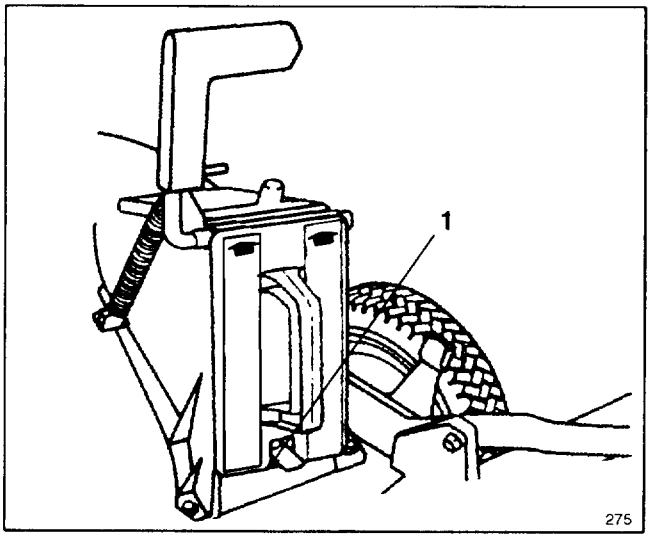

Figure 9

1. Spring clip

4. To remove the plug, move the discharge door handle rearward while at the same time lift up the spring clip on the bottom of the plug. When the plug is unlocked, pull it out of the discharge tunnel.

USING GRASS BAG

Occasionally you may wish to use the grass bag for bagging extra long grass, lush grass or leaves.

1. Stop engine and wait for all moving parts to stop.

2. Ensure discharge door handle is fully forward and pin is engaged in catch (Fig. 10).

3. INSTALLING BAG—Slide hole in bag frame onto retaining post on housing (Fig. 10) and set rear of bag frame onto lower handle.

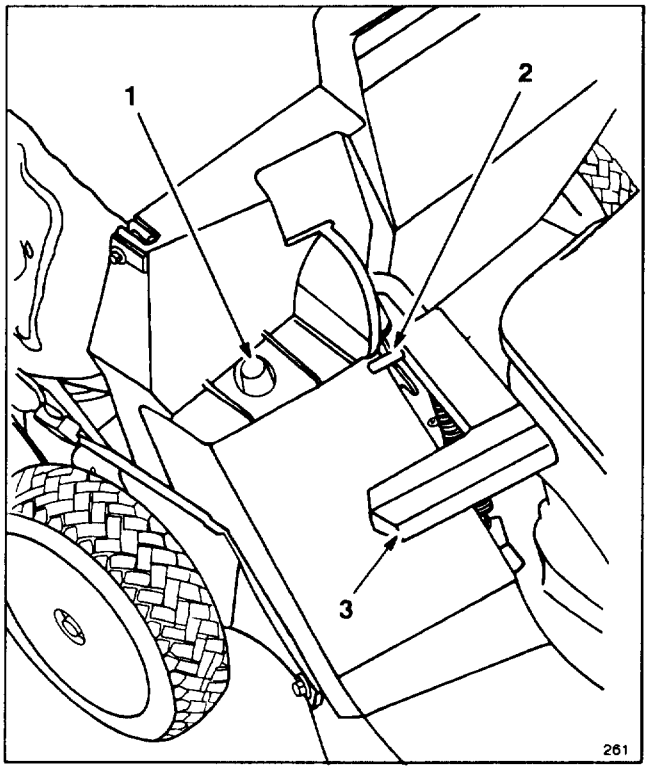

Figure 10

1. Bag frame on retaining post
2. Pin engaged in catch
3. Handle fully forward. Discharge door closed.

4. Pull discharge door handle forward until pin clears catch and move handle rearward until pin locks in bag notch (Fig. 11). Discharge door in mower housing is now open.

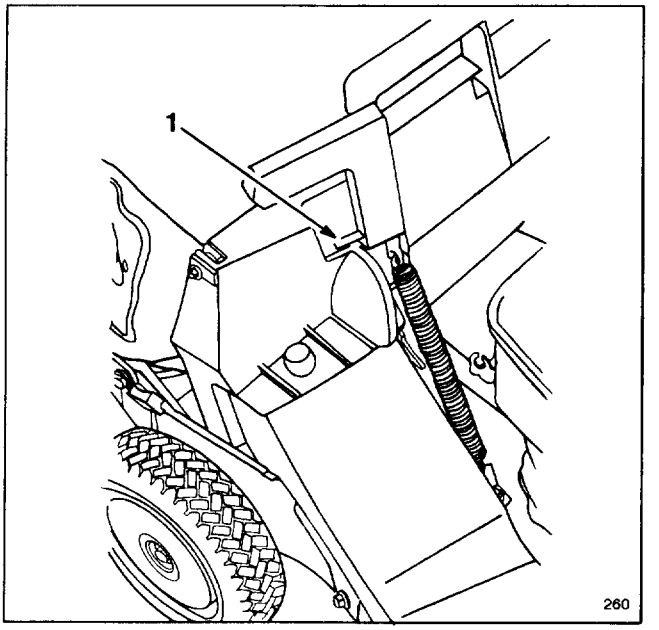

Figure 11

1. Pin locked in bag notch

OPERATING INSTRUCTIONS

5. EMPTYING BAG—Stop engine and wait for all parts to stop. Raise discharge door handle and move it forward to engage the locking pin with catch (Fig. 10). Grasp handle at front and rear of bag and lift bag off mower. Gradually tip bag forward to empty clippings.

6. To reinstall bag, repeat steps 3-4.

⚠ DANGER

- **Grass clippings and other objects can be thrown from an open discharge tunnel.**
- **Objects thrown with enough force could cause serious personal injury or death to operator or bystander.**
- **Never open door on discharge tunnel when engine is running unless the grass bag, optional side discharge attachment or discharge tunnel plug is securely installed.**

⚠ DANGER

- **A worn grass bag could allow small stones and other similar debris to be thrown in operator's or bystander's direction.**
- **Thrown objects can cause serious personal injury or death to operator or bystanders.**
- **Check the grass bag frequently. If it is damaged, install a new genuine TORO replacement bag that has this or a similar warning.**

⚠ DANGER

- **Thrown objects may result if discharge door does not close completely.**
- **Thrown objects can cause serious personal injury or death.**
- **If discharge door cannot be closed because grass clippings clog discharge area, stop engine and gently move discharge door handle back and forth until door can be closed completely. Do not force discharge door closed because door or handle may be damaged. If door still cannot be closed, remove obstruction with a stick, not your hand.**

ADJUSTING HEIGHT–OF–CUT

Five letters cast into the housing represent the height–of–cut settings (Fig. 12).

⚠ DANGER

- **Adjusting height–of–cut levers could bring hands into contact with moving blade.**
- **Contact with blade could cause serious personal injury.**
- **Do not adjust the height–of–cut settings when engine is running and blade is rotating.**
- **Do not put fingers under housing to lift mower when adjusting height–of–cut levers.**

1. Stop the engine and wait for all moving parts to stop.

2. For easier adjustment, lift housing up so wheel is off ground. **Do not put fingers under housing when lifting.** Squeeze adjusting lever toward wheel and move to desired setting (Fig. 12). Assure pin on adjusting lever engages notch in housing. Adjust all wheels to the same setting.

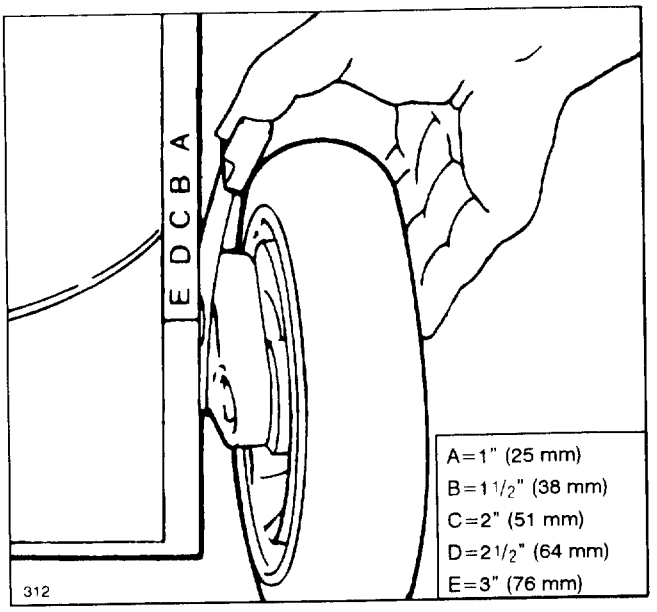

Figure 12

Note: Front wheels can be adjusted to 1/2". Move adjusting lever past "A" and release pin into notch in housing.

MAINTENANCE

⚠ CAUTION

- **Engine could start accidentally.**
- **Accidental starting of engine could cause serious injury to operator or bystanders.**
- **Pull wire off spark plug before performing any maintenance or adjustments.**

SERVICING AIR CLEANER

Normally, clean air cleaner after every 25 operating hours. More frequent cleaning is required when mower is operated in dusty or dirty conditions.

1. Stop engine and pull wire off spark plug (Fig. 13).

2. Lift tabs at top of air cleaner cover and pivot cover down. Clean cover thoroughly (Fig. 13).

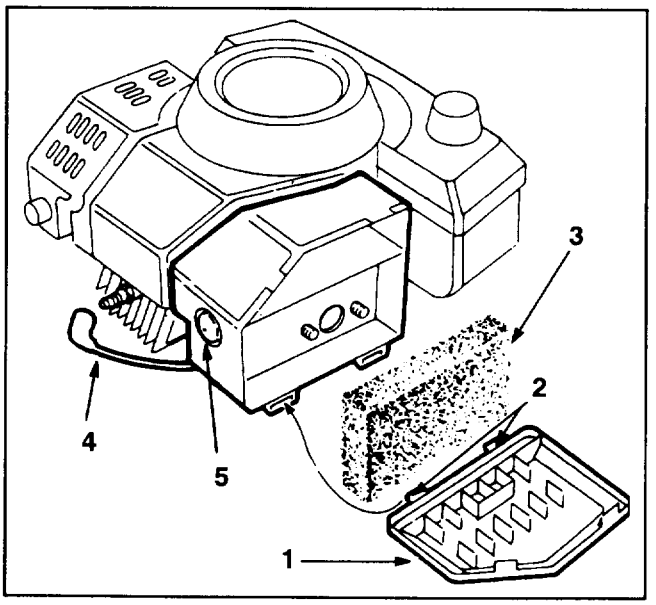

Figure 13

1. Cover
2. Locking tabs
3. Foam element
4. Spark plug wire
5. Primer

3. If outside of foam element is dirty, remove it from air cleaner body (Fig. 13). Clean thoroughly.

A. WASH foam element in a solution of liquid soap and warm water. Squeeze to remove dirt, but do not twist because foam may tear. Rinse thoroughly in clear water.

B. DRY by wrapping in a clean rag. Squeeze rag and foam element to dry.

C. SATURATE element with approximately 5 ounces (150 ml) of SAE 30 or 10W30 engine oil. Squeeze element to remove excess oil and to distribute oil thoroughly. A damp element is desirable.

4. Reinstall foam element and air cleaner cover.

IMPORTANT: Do not operate engine without air cleaner element because extreme engine wear and damage will likely result.

REPLACING SPARK PLUG

Use an NGK BPMR4A spark plug or equivalent. Correct air gap is 0.032" (0.81 mm). Remove plug after every 25 operating hours and check its condition.

1. Stop engine and pull wire off spark plug (Fig. 13).

2. Clean around spark plug and remove plug from cylinder head.

IMPORTANT: Replace a cracked, fouled, or dirty spark plug. Do not sand blast, scrape, or clean electrodes because engine damage could result from grit entering cylinder.

3. Set air gap at 0.032" (0.81 mm) (Fig. 14). Install correctly gapped spark plug and gasket seal. Tighten plug firmly to 10 ft–lb (13.6 N·m).

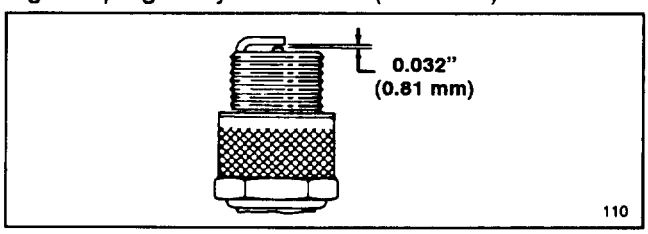

Figure 14

DRAINING GASOLINE

1. Stop engine and pull wire off spark plug (Fig. 13).

Note: Drain gasoline from a cold engine only.

2. Remove cap from fuel tank and use pump–type syphon to drain fuel into clean gas can.

Note: This is the only procedure recommended for draining fuel.

ADJUSTING THROTTLE

Throttle control adjustment may be required if engine does not start or stop. Whenever a new throttle control cable is installed, throttle must be adjusted.

1. Stop engine and pull wire off spark plug (Fig. 13).

2. Move throttle control to 🐇 (FAST) position.

3. Loosen cable clamp screw until throttle cable slides (Fig. 15). Align holes in choke arm and throttle bracket. A small diameter pin may be inserted into aligned holes to hold adjustment. Push throttle cable until throttle arm makes contact with choke arm. Tighten cable clamp. Remove pin if used.

MAINTENANCE

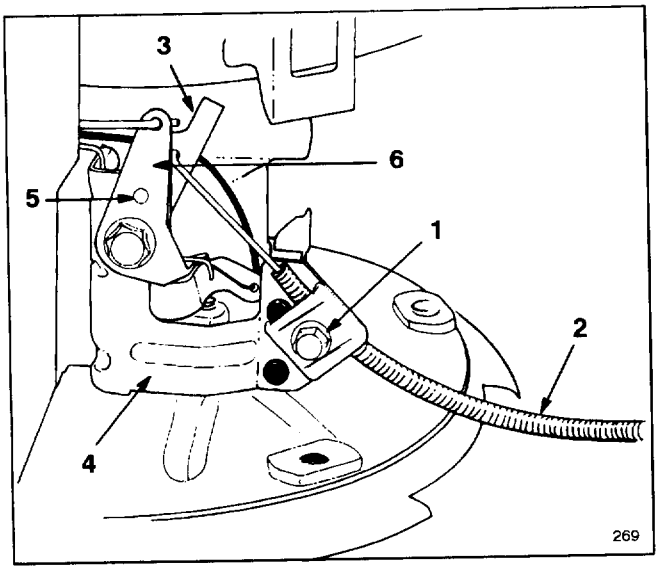

Figure 15

1. Cable clamp screw
2. Throttle cable
3. Throttle lever
4. Throttle bracket
5. Aligned holes
6. Choke arm

INSPECTING/REMOVING/SHARPENING BLADE

1. Stop engine and pull wire off spark plug (Fig. 13).

2. Drain gasoline from fuel tank; refer to Draining Gasoline, page 9.

3. Tip mower on its right side (Fig. 16). Avoid rotating blade as starting problems may result.

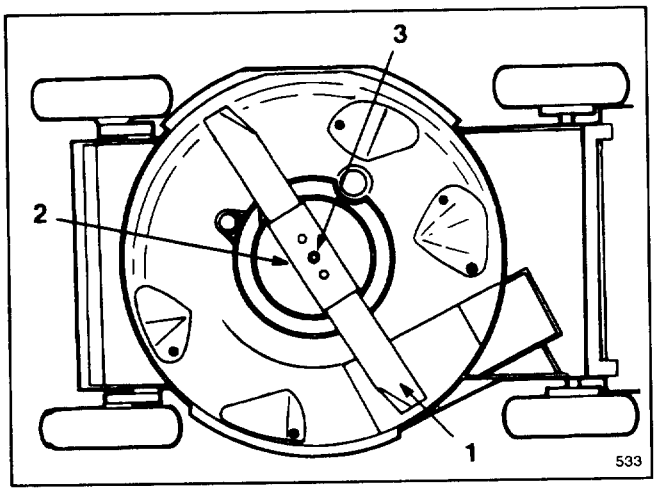

Figure 16

1. Blade
2. Blade stiffener
3. Blade bolt and lockwasher

4. INSPECTING BLADE—Carefully examine blade for sharpness and wear, especially where flat and curved parts meet (Fig. 17A). Since sand and abrasive material can wear away the metal that connects the flat and curved parts of the blade, check blade before using the mower. If a slot or wear is noticed, (Fig. 17B & C), replace blade. Refer to step 5.

⚠ DANGER

- **A worn or damaged blade could break and a piece of blade could be thrown into operator's or bystander's area.**
- **A thrown piece of blade could cause serious personal injury or death to operator or bystanders.**
- **Inspect blade periodically for wear or damage.**
- **Replace a worn or damaged blade.**

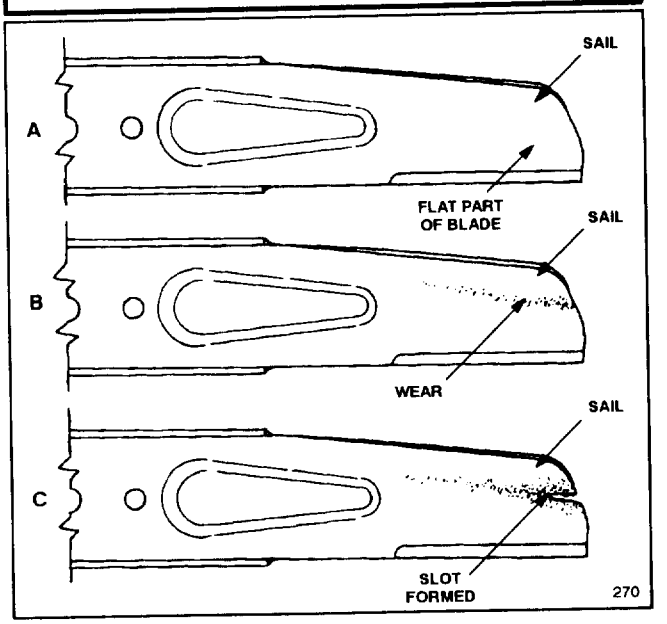

Figure 17

5. REMOVING BLADE—Grasp end of blade using a rag or thickly padded glove. Remove blade bolt, lockwasher, blade stiffener, and blade (Fig. 16).

NOTE: For best performance, install new blade before cutting season begins. During the year, file down small nicks to maintain the cutting edge.

6. SHARPENING BLADE—Using a file, sharpen top side of blade (side facing mower housing) and maintain original cutting angle (Fig. 18). The blade will remain balanced if the same amount of material is removed from both cutting edges.

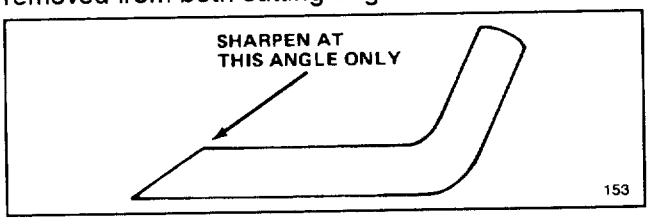

Figure 18

IMPORTANT: Check balance of blade by putting it on a blade balancer. An inexpensive balancer can be purchased at a hardware store. A balanced blade will stay in a horizontal position and an unbalanced blade will settle to the heavy side. If the blade is not balanced, file more metal off cutting edge on heavy end of blade.

7. Install sharp, balanced TORO blade, blade stiffener, lockwasher, and blade bolt. Sail part of blade must point toward top of mower housing to assure correct installation. Tighten the blade bolt to 50 ft–lbs (68 N·m).

LUBRICATION

After every 25 operating hours or when season ends, front and rear wheels must be lubricated.

1. Apply 2 or 3 drops of light oil on inside and outside of all wheel bolts. Spin wheels to distribute oil into bushings. Wipe up excess oil.

ADJUSTING BRAKE CABLE

Whenever a new brake cable assembly is installed, an adjustment is required.

1. Stop engine and pull wire off spark plug (Fig. 13).

2. CHECK ADJUSTMENT (Fig. 19)—Move control bar toward handle until slack in wire is removed. Gap between brake lever and handle must be 3/16" – 1/4". See step 3 for adjustment.

3. ADJUST CABLE CONDUIT (Fig. 19)—Loosen nut on cable bracket. Insert 3/16" – 1/4" object between brake lever and handle. Pull down on cable conduit until all slack is removed from wire. Then tighten nut.

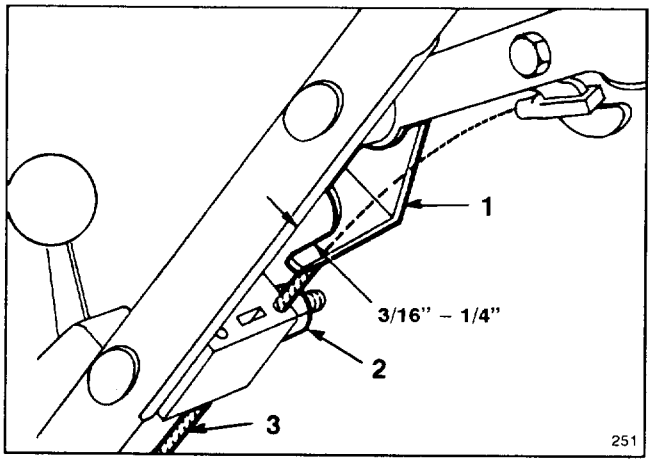

Figure 19

1. Brake lever 2. Nut 3. Cable conduit

CLEANING MOWER HOUSING, DISCHARGE TUNNEL AND PLUG

To ensure best performance, the discharge tunnel plug must be cleaned after each use. When grass is thick and lush, clippings may collect on and around the plug; this may make plug removal difficult. After each use, remove plug from discharge tunnel and clean off all debris.

Keep underside of mower housing clean. Be especially careful to keep kickers on underside of mower housing free of debris (Fig. 20).

Always be sure that discharge tunnel door locks closed when handle is released. If debris prevents discharge door from locking closed, clean inside of discharge tunnel and door thoroughly.

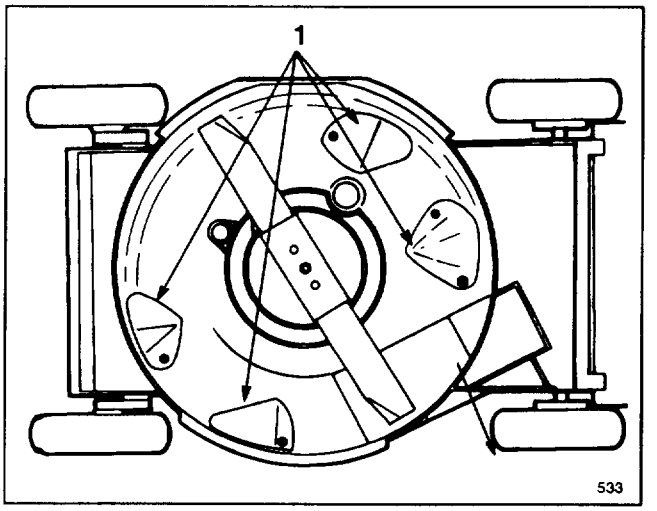

Figure 20

1. Kicker plates

1. Stop engine and pull wire off spark plug (Fig. 13).

2. Drain gasoline from fuel tank: refer to Draining Gasoline, page 9.

3. Tip mower on its right side. Avoid rotating blade as starting problems may result.

4. Remove dirt and grass clippings that stick to housing by scraping it with a hardwood scraper. Avoid burrs and sharp edges.

5. Turn mower upright.

6. Remove debris from inside of discharge tunnel.

7. Clean discharge tunnel plug.

PREPARING MOWER FOR STORAGE

1. For long term storage, either drain gasoline from fuel tank or add a fuel stabilizer to the gasoline. To drain gasoline, refer to Draining Gasoline, page 9. After fuel is drained, start engine and let it idle until all fuel is consumed and engine stops. Repeat the starting procedure two more times to ensure all gas is removed from the engine. If gasoline is not drained, gum–like varnish deposits will form and cause poor engine operation, even starting problems.

Fuel can be left in gas tank only if a fuel additive, such as Toro's Stabilizer/Conditioner, is added to gasoline and run through engine before storing. Toro's Stabilizer/Conditioner is a petroleum distillate based conditioner/stabilizer. Toro does not recommend stabilizers with an alcohol base, such as ethanol, methanol or isopropyl. Use fuel additive in recommended quantities as specified on container.

MAINTENANCE

Under normal conditions, fuel additives remain effective in fuel for 6–8 months.

2. Remove spark plug and pour 2 tablespoons of oil into hole in cylinder. Pull starter rope slowly to coat inside of cylinder. Install spark plug and tighten to 10 ft–lb (20.4 N·m). **DO NOT INSTALL WIRE ON SPARK PLUG.**

3. Check condition of blade: refer to Inspecting/Removing/Sharpening Blade, page 10.

4. Tighten all nuts, bolts, and screws.

5. Clean mower housing: refer to Cleaning Mower Housing, Discharge Tunnel and Plug, page 11.

6. Clean dirt and chaff from cylinder, cylinder head fins, and blower housing. Also remove grass clippings, dirt, and grime from external parts of the engine, shrouding, and top of mower housing.

7. Clean air cleaner: refer to Servicing Air Cleaner, page 9.

8. Lubricate the wheels: refer to Lubrication, page 11.

9. Touch up all rusted or chipped paint surfaces. Toro Re–Kote paint is available from an Authorized TORO Service Dealer.

10. Store mower in a clean, dry place. Cover mower to keep it clean and protected.

OPTIONAL EQUIPMENT

For special conditions, the following accessories may be purchased at your local Authorized TORO Service Dealer.

1. Side Discharge Kit, Model No. 59168—Installs in seconds. Rear mounted in place of the grass bag. Disperses clippings while trimming on both sides (Fig. 21).

2. Spark Arrestor, Part No. 81–0200—If a spark arrestor is required because of local, state, or federal regulations, it may be purchased at your local Authorized TORO Service Dealer. If mower is operated on any California forest, brush, or grass covered land without a properly operating spark arrestor, the operator is violating state law, Section 4442 Public Resources Code.

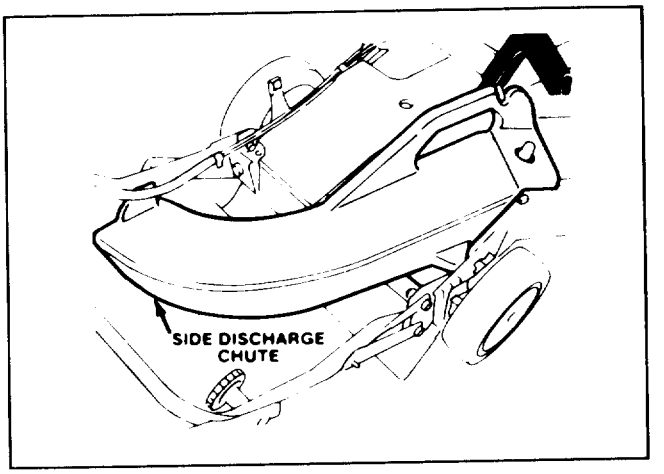

Figure 21

PRODUCT IDENTIFICATION

A model and a serial number decal is located on rear of mower housing. Always refer to specific numbers on this decal in correspondence or when replacement parts are needed.

TORO SERVICE SUPPORT

If help – concerning safety, set–up, operation, maintenance, or troubleshooting – is ever needed, contact the local Authorized TORO Service Dealer or Distributor. Refer to the "Yellow Pages" for assistance. In addition to skilled service technicians, the dealer and distributor have factory approved accessories and replacement parts. Keep your Toro all TORO. Buy genuine TORO replacement parts and accessories.

It is Toro's policy to design and produce high quality products. To ensure customer satisfaction, Toro has extensive warranty coverage on its products. Your TORO GTS Engine powered product has two warranty statements covering it. The Toro Total Coverage Guarantee is our standard warranty statement and is printed on the last page of this manual.

In addition to The Toro Total Coverage Guarantee, we are so confident that the TORO GTS Engine will provide a high level of performance and durability that we are providing a *Starting Guarantee!* Please read the details of this additional warranty coverage printed below.

THE TORO STARTING GUARANTEE

A Five Year Limited Warranty
On All Toro GTS Engines

What Is Covered?

The Toro Company guarantees that your TORO GTS Engine will start on the first or second pull for five years from the date of purchase—if you provide the routine maintenance it requires—or we will fix it. The cost of parts and labor are included, but you must pay transportation costs. This covers TORO GTS rotary mower engines purchased after September 1, 1988, and TORO GTS snow engines (Models 38180 and 38185) purchased after August 31, 1989.

What Must You Do To Keep The Warranty In Effect?

You must maintain your TORO GTS Engine by following the maintenance schedule detailed in the operator's manual, at your expense. You must record this work in the maintenance chart provided in your owner's manual and keep your proof of purchase.

How Do You Get Service?

If the starting performance of your TORO GTS Engine should diminish to the point where it will not start in one or two pulls by a normal, able–bodied adult, you should follow the procedures below:

1. Contact any Authorized TORO Service Dealer, TORO Master Service Dealer, or TORO Distributor (the Yellow Pages of your telephone directory is a good reference source).

2. He will either instruct you to return the product to him or recommend another Authorized TORO Service outlet which might be more convenient.

3. Bring the product, your maintenance records, and proof of purchase to the Service Dealer.

If, for any reason, you are dissatisfied with the Dealer's analysis of your engine's starting condition, or the assistance provided, please feel free to contact us:

TORO Customer Service Department
8111 Lyndale Avenue South
Minneapolis, Minnesota 55420

What Does This Warranty Not Cover?

This Warranty does not cover:

1. Any repairs on products used commercially.

2. Normal maintenance including replacement of spark plugs, air filter, fuel filter, and carburetor adjustments.

3. Oil change and lubrication.

4. Repairs or adjustments due to:

   a. Failure to follow proper maintenance procedures;

   b. Rotary mower blade striking an object;

   c. Contaminants in the fuel system;

   d. Improper fuel or fuel mixture (consult your owner's manual if in doubt);

   e. Failure to drain the fuel system prior to any period of non-use over three months;

   f. Operation misuse, neglect or accidents;

   g. Repairs or attempted repairs by anyone other than an Authorized TORO Service Dealer.

5. Special operational conditions where starting may require more than two pulls, including:

   a. First time starts after extended period of non-use or seasonal storage;

   b. Cool temperature starts such as those found in early spring and late fall may require an additional pull or two (applies to rotary products only);

   c. Improper starting procedures. If you are having difficulty starting your unit, please check the operator's manual to ensure you are using the correct starting procedures. This can save an unnecessary visit to a Service Dealer.

All warranty repairs reimbursable under this warranty must be performed by an Authorized TORO Service Dealer using Toro approved replacement parts.
The above remedy through repair by an Authorized TORO Service Dealer is the purchaser's sole remedy.

How Does State Law Relate To This Warranty?

There is no other express warranty except for The Toro Promise. All implied warranties of merchantability (that the product is fit for ordinary use) and fitness for use (that the product is fit for a particular purpose) are limited to the duration of the express warranty.

Some states do not allow limitation on how long implied warranties last, so the above exclusion may not apply to you.

The Toro Company is not liable for indirect, incidental or consequential damages in connection with the use of the product, including any cost or expense of providing substitute equipment or service during periods of malfunction or non-use.

Some states do not allow exclusions of incidental or consequential damages, so the above exclusion may not apply to you.

This warranty gives you specific legal rights, and you may also have other rights which vary from state to state.

GUARANTEED TO START MAINTENANCE RECORD

To keep the starting guarantee in effect, you must perform the following maintenance after every 25 operating hours, more often in dusty and dirty conditions. Follow the procedures in this Operator's Manual and record information on this chart.

Date	Hours Used	Air Cleaner Service	Change Oil Doesn't Apply to 2-Cycle	Lubricate Wheels	Check Spark Plug	Mower Storage

TORO Consumer Products

THE TORO TOTAL COVERAGE GUARANTEE

A Full Two–Year Warranty
(Limited Warranty for Commercial Use)

What Is Covered By This Express Warranty?

The Toro Company promises to repair any TORO Product used for residential purposes if defective in materials or workmanship for a period of two years from the date of purchase. The cost of parts and labor are included, but the customer pays the transportation costs.

Transportation within a 15 mile radius of the servicing dealer is covered under this warranty for two–stage snowthrowers, walk behind debris equipment and all TORO Wheel Horse riding products. Walk power mowers, single stage snowthrowers, and other products not specifically covered, are excluded from the transportation coverage provided by this warranty.

What Products Are Covered By This Warranty?

This warranty applies to all gasoline powered Consumer Products (including TORO Wheel Horse riding products). Wide area walk behind mowers, ProLine 118, and 21" Commercial mowers without blade stop controls are covered by separate warranty statements.

How About Commercial Use?

TORO Consumer Products used for commercial, institutional or rental use are covered by a limited warranty for the following time periods from the date of purchase:

Products	Warranty Period
• 300 through 700 Series Tractors (except 612–Z) and 1600 HMR	
Chassis	1 year limited warranty
Engine	2 year limited warranty
• 21" Commercial Duty Walk Mower with blade stop controls	1 year limited warranty
• 200 Series Tractors, Rear Engine Riders, 612–Z, 1200 HMR 3.0 and 3.5 HP Edgers Straight Shaft Trimmers, and Backpack Blowers	90 day limited warranty
• All Others	45 day limited warranty

How Do You Get Warranty Service?

Should you feel your TORO product contains a defect in material or workmanship, contact the dealer who sold you the product or any Authorized TORO Service Dealer or TORO Master Service Dealer. The Yellow Pages of your telephone directory is a good reference source. The dealer will either arrange service at his/her dealership or recommend another Authorized Service Dealer who may be more convenient. You may need proof of purchase (copy of registration card, sales receipt, etc.) for warranty validation.

If for any reason you are dissatisfied with the Service Dealer's analysis of the defect in materials or workmanship or if you need a referral to a TORO Service Dealer, please feel free to contact us at the following address:

Toro Customer Service Department
8111 Lyndale Avenue South
Minneapolis, MN 55420
612–888–8801

What Must You Do To Keep The Warranty In Effect?

You must maintain your TORO Product by following the maintenance procedures described in the operator's manual. Such routine maintenance, whether performed by a dealer or by you, is at your expense.

What Does This Warranty Not Cover? and How Does Your State Law Relate To This Warranty?

There is no other express warranty except the TORO Starting Guarantee on GTS Engines. This express warranty does not cover:

- Cost of regular maintenance service or parts, such as filters, fuel, lubricants, tune–up parts, blade sharpening, brake and clutch adjustments.

- Any product or part which has been altered or misused or required replacement or repair due to normal wear, accidents, or lack of proper maintenance.

- Repairs necessary due to improper fuel, contaminants in the fuel system, or failure to properly prepare the fuel system prior to any period of non–use over three months.

- Pickup and delivery charges for distances beyond a 15 mile radius from an Authorized TORO Service Dealer (covered products only).

All repairs covered by this warranty must be performed by an Authorized TORO Service Dealer using Toro approved replacement parts.

Repair by an Authorized TORO Service Dealer is your sole remedy under this warranty.

The Toro Company is not liable for indirect, incidental or consequential damages in connection with the use of the TORO Products covered by this warranty, including any cost or expense of providing substitute equipment or service during reasonable periods of malfunction or non–use pending completion of repairs under this warranty. Some states do not allow exclusions of incidental or consequential damages, so the above exclusion may not apply to you.

This warranty gives you specific legal rights, and you may also have other rights which vary from state to state.

COUNTRIES OTHER THAN THE UNITED STATES OR CANADA

Customers who have purchased TORO products exported from the United States or Canada should contact their TORO Distributor (Dealer) to obtain guarantee policies for your country, province, or state. If for any reason you are dissatisfied with your Distributor's service or have difficulty obtaining guarantee information, contact the TORO importer. If all other remedies fail, you may contact us at The Toro Company.