Form No. 3378-891 Rev A

TORO®

Count on it.

Operator's Manual

Greensmaster® Flex™ 1800 and 2100 Traction Unit

Model No. 04040—Serial No. 313001147 and Up

Model No. 04041—Serial No. 313000133 and Up

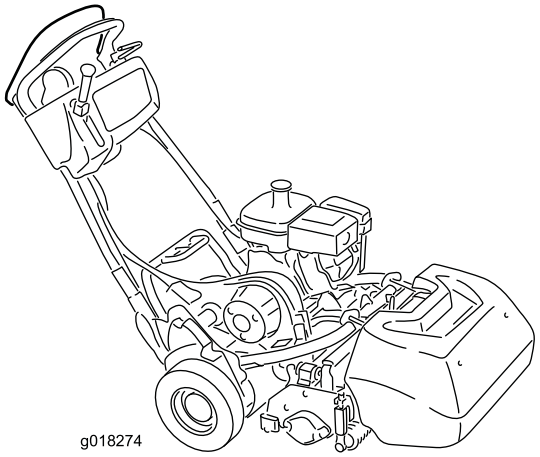

g018274

Register at www.Toro.com.
Original Instructions (EN)

CE

3378-891 A

This product complies with all relevant European directives, for details please see the separate product specific Declaration of Conformity (DOC) sheet.

WARNING

CALIFORNIA
Proposition 65 Warning

The engine exhaust from this product contains chemicals known to the State of California to cause cancer, birth defects, or other reproductive harm.

Because in some areas there are local, state, or federal regulations requiring that a spark arrester be used on the engine of this machine, a spark arrester is incorporated with the muffler assembly.

Genuine Toro spark arresters are approved by the USDA Forestry Service.

Important: This engine is equipped with a spark arrester muffler. It is a violation of California Public Resource Code Section 4442 to use or operate the engine on any forest-covered, brush-covered, or grass-covered land without a spark arrester muffler maintained in working order, or the engine constricted, equipped, and maintained for the prevention of fire. Other states or federal areas may have similar laws.

This spark ignition system complies with Canadian ICES-002.

Introduction

This machine is a walk-behind, reel-blade lawn mower intended to be used by professional, hired operators in commercial applications. It is primarily designed for cutting grass on well-maintained lawns in parks, golf courses, sports fields, and on commercial grounds. It is not designed for cutting brush, mowing grass and other growth alongside highways, or for agricultural uses.

Read this information carefully to learn how to operate and maintain your product properly and to avoid injury and product damage. You are responsible for operating the product properly and safely.

You may contact Toro directly at www.Toro.com for product and accessory information, help finding a dealer, or to register your product.

Whenever you need service, genuine Toro parts, or additional information, contact an Authorized Service Dealer or Toro Customer Service and have the model and serial numbers of your product ready. Figure 1 identifies the location of the model and serial numbers on the product. Write the numbers in the space provided.

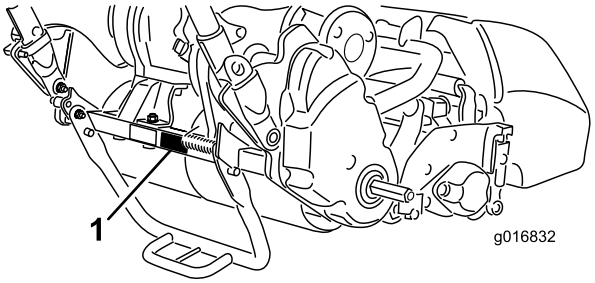

Figure 1

1. Location of the model and serial numbers-Traction unit

Model No. _____

Serial No. _____

This manual identifies potential hazards and has safety messages identified by the safety alert symbol (Figure 2), which signals a hazard that may cause serious injury or death if you do not follow the recommended precautions.



Figure 2

1. Safety alert symbol.

This manual uses two other words to highlight information. **Important** calls attention to special mechanical information and **Note** emphasizes general information worthy of special attention.

© 2013—The Toro® Company
8111 Lyndale Avenue South
Bloomington, MN 55420

Contact us at www.Toro.com.
Printed in the USA.
All Rights Reserved

Contents

Introduction 2
Safety 4
Safe Operating Practices 4
Toro Mower Safety 5
Sound Power Level 6
Sound Pressure Level 6
Vibration Level 6
Safety and Instructional Decals 6
Setup 9
1 Installing the Cutting Unit to the Traction Unit 10
2 Installing the Handle Retainers 10
3 Installing the Transport Wheels 11
4 Checking the Engine Oil Level 12
5 Installing the Grass Basket 12
Product Overview 13
Controls 13
Specifications 16
Attachments/Accessories 16
Operation 17
Think Safety First 17
Checking the Engine Oil Level 17
Filling the Fuel Tank 17
Adjusting the Handle Height 18
Adjusting the Handle Angle 18
Starting and Stopping the Engine 19
Transport Operation 19
Preparing to Mow 19
Mowing Operation 19
Checking the Operation of the Interlock Switches 20
Releasing the Transmission 21
Setting the Machine to Match Turf Conditions 23
Maintenance 24
Recommended Maintenance Schedule(s) 24
Daily Maintenance Checklist 25
Engine Maintenance 26
Servicing the Engine Oil 26
Servicing the Air Cleaner 27
Servicing the Spark Plug 27
Fuel System Maintenance 28
Cleaning the Fuel Cup and Screen 28
Replacing the Fuel Line 29
Electrical System Maintenance 29
Servicing the Traction Interlock Switch 29
Servicing the Brake Interlock Switch 29
Brake Maintenance 30
Adjusting the Service/Parking Brake 30
Belt Maintenance 31
Inspecting the Reel Drive Belt 31
Transmission Cover Access Hole 31
Transmission Belt Tensioner 31
Controls System Maintenance 32
Adjusting the Traction Control 32
Adjusting the Reel Control 32
Storage 33

Safety

This machine meets or exceeds CEN standard EN 836:1997, ISO standard 5395:1990, and ANSI B71.4-2004 specifications in effect at the time of production.

Improper use or maintenance by the operator or owner can result in injury. To reduce the potential for injury, comply with these safety instructions and always pay attention to the safety alert ⚠ symbol, which means CAUTION, WARNING, or DANGER-"personal safety instruction." Failure to comply with the instruction may result in personal injury or death.

Safe Operating Practices

The following instructions are from the CEN standard EN 836:1997, ISO standard 5395:1990, and ANSI B71.4-2004.

Training

- Read the Operator's Manual and other training material carefully. Be familiar with the controls, safety signs, and the proper use of the equipment.
- Never allow children or people unfamiliar with these instructions to use or service the mower. Local regulations may restrict the age of the operator.
- Never mow while people, especially children, or pets are nearby.
- Keep in mind that the operator or user is responsible for accidents or hazards occurring to other people or their property.
- The owner/user can prevent and is responsible for accidents or injuries occurring to himself or herself, other people, or property.

Preparation

- While mowing, always wear substantial footwear, long trousers, hard hat, safety glasses, and ear protection. Long hair, loose clothing, or jewelry may get tangled in moving parts. Do not operate the equipment when barefoot or wearing open sandals.
- Thoroughly inspect the area where the equipment is to be used and remove all objects which may be thrown by the machine.
- Warning-Fuel is highly flammable. Take the following precautions:
  - Store fuel in containers specifically designed for this purpose.
  - Refuel outdoors only and do not smoke while refuelling.
  - Add fuel before starting the engine. Never remove the cap of the fuel tank or add fuel while the engine is running or when the engine is hot.
  - If fuel is spilled, do not attempt to start the engine but move the machine away from the area of spillage and avoid creating any source of ignition until fuel vapors have dissipated.
  - Replace all fuel tanks and container caps securely.
- Replace faulty silencers.
- Evaluate the terrain to determine what accessories and attachments are needed to properly and safely perform the job. Only use accessories and attachments approved by the manufacturer.
- Check that operator's presence controls, safety switches and shields are attached and functioning properly. Do not operate unless they are functioning properly.

Operation

- Do not operate the engine in a confined space where dangerous carbon monoxide fumes can collect.
- Mow only in daylight or in good artificial light.
- Before attempting to start the engine, disengage all blade attachment clutches, shift into neutral, and engage the parking brake.
- Stay alert for holes in the terrain and other hidden hazards.
- Watch out for traffic when crossing or near roadways.
- Stop the blades rotating before crossing surfaces other than grass.
- When using any attachments, never direct discharge of material toward bystanders nor allow anyone near the machine while in operation.
- Never operate the machine with damaged guards, shields, or without safety protective devices in place. Be sure all interlocks are attached, adjusted properly, and functioning properly.
- Do not change the engine governor settings or overspeed the engine. Operating the engine at excessive speed may increase the hazard of personal injury.
- Before leaving the operator's position:
  - stop on level ground;
  - disengage the power take-off and lower the attachments;
  - change into neutral and set the parking brake;
  - stop the engine.
- Disengage drive to attachments when transporting or not in use.
- Stop the engine and disengage drive to attachment
  - before refuelling;
  - before removing the grass basket;
  - before making height adjustment unless adjustment can be made from the operator's position.
  - before clearing blockages;
  - before checking, cleaning or working on the mower;
  - after striking a foreign object or if an abnormal vibration occurs. Inspect the mower for damage and make repairs before restarting and operating the equipment.

- Reduce the throttle setting before stopping engine and, if the engine is provided with a fuel shut-off valve, turn the valve off at the conclusion of mowing.
- Keep hands and feet away from the cutting unit.
- Slow down and use caution when making turns and crossing roads and sidewalks. Stop reels if not mowing.
- Do not operate the mower under the influence of alcohol or drugs
- Lightning can cause severe injury or death. If lightning is seen or thunder is heard in the area, do not operate the machine; seek shelter.
- Use care when loading or unloading the machine into a trailer or truck
- Use care when approaching blind corners, shrubs, trees, or other objects that may obscure vision.

Maintenance and Storage

- Keep all nuts, bolts and screws tight to be sure the equipment is in safe working condition.
- Never store the equipment with fuel in the tank inside a building where fumes may reach an open flame or spark.
- Allow the engine to cool before storing in any enclosure.
- To reduce the fire hazard, keep the engine, silencer, battery compartment and fuel storage area free of grass, leaves, or excessive grease.
- Check the grass basket frequently for wear or deterioration.
- Keep all parts in good working condition and all hardware and hydraulic fittings tightened. Replace all worn or damaged parts and decals.
- If the fuel tank has to be drained, do this outdoors.
- Be careful during adjustment of the machine to prevent entrapment of the fingers between moving blades and fixed parts of the machine.
- Disengage drives, disengage the cutting unit, set parking brake, stop engine and disconnect spark plug wire. Wait for all movement to stop before adjusting, cleaning or repairing.
- Clean grass and debris from cutting unit, drives, mufflers, and engine to help prevent fires. Clean up oil or fuel spillage.
- Carefully release pressure from components with stored energy.
- Disconnect battery and remove spark plug wire before making any repairs. Disconnect the negative terminal first and the positive last. Reconnect positive first and negative last.
- Use care when checking the reel. Wear gloves and use caution when servicing them.
- Keep hands and feet away from moving parts. If possible, do not make adjustments with the engine running.

Toro Mower Safety

The following list contains safety information specific to Toro products or other safety information that you must know that is not included in the CEN, ISO, or ANSI standard.

This product is capable of amputating hands and feet and throwing objects. Always follow all safety instructions to avoid serious injury or death.

Use of this product for purposes other than its intended use could prove dangerous to user and bystanders.

- Know how to stop the engine quickly.
- Do not operate the machine while wearing tennis shoes or sneakers.
- Wearing safety shoes and long pants is advisable and required by some local ordinances and insurance regulations.
- Handle gasoline carefully. Wipe up any spills.
- Check the safety interlock switches daily for proper operation. If a switch should fail, replace the switch before operating the machine.
- Always stand behind the handle when starting and operating the machine.
- Using the machine demands attention. To prevent loss of control:
  - Do not drive close to sand traps, ditches, creeks, or other hazards.
  - Reduce speed when making sharp turns. Avoid sudden stops and starts.
  - When near or crossing roads, always yield the right-of-way.
- The grass basket must be in place, during the mowing operation, for maximum safety. Shut the engine off before emptying the basket.
- Do not touch the engine, muffler, or exhaust pipe while the engine is running or soon after it has stopped because these areas could be hot enough to cause burns.
- When a person or pet appears unexpectedly in or near the mowing area, stop mowing. Careless operation, combined with terrain angles, ricochets, or improperly positioned guards can lead to thrown object injuries. Do not resume mowing until the area is cleared.

Maintenance and Storage

- Check all fuel lines for tightness and wear on a regular basis. Tighten or repair them as needed.
- If the engine must be running to perform a maintenance adjustment, keep hands, feet, clothing, and any parts of the body away from the cutting unit, attachments and any moving parts. Keep everyone away.
- To ensure safety and accuracy, have an Authorized Toro Distributor check the maximum engine speed with a

tachometer. Maximum governed engine speed should be 3190-3340 RPM.

- If major repairs are ever needed or if assistance is desired, contact an Authorized Toro Distributor.
- Use only Toro-approved attachments and replacement parts. The warranty may be voided if used with unapproved attachments.

Sound Power Level

- **Model 04040:**

  This unit has a guaranteed sound power level of 96 dBA, which includes an Uncertainty Value (K) of 1 dBA.

  Sound power level was determined according to the procedures outlined in EN 11094.

- **Model 04041:**

  This unit has a guaranteed sound power level of 95 dBA, which includes an Uncertainty Value (K) of 1 dBA.

  Sound power level was determined according to the procedures outlined in EN 11094.

Sound Pressure Level

- **Model 04040:**

  This unit has a sound pressure level at the operator's ear of 84 dBA, which includes an Uncertainty Value (K) of 1 dBA.

  Sound pressure level was determined according to the procedures outlined in EN 836.

- **Model 04041:**

  This unit has a sound pressure level at the operator's ear of 87 dBA, which includes an Uncertainty Value (K) of 1 dBA.

  Sound pressure level was determined according to the procedures outlined in EN 836.

Vibration Level

Hand-Arm

- **Model 04040:**

  Measured vibration level for right hand = 2.86 m/s^2

  Measured vibration level for left hand = 3.24 m/s^2

  Uncertainty Value (K) = 1.6 m/s^2

- **Model 04041:**

  Measured vibration level for right hand = 3.16 m/s^2

  Measured vibration level for left hand = 2.73 m/s^2

  Uncertainty Value (K) = 1.6 m/s^2

Measured values were determined according to the procedures outlined in EN 836.

Safety and Instructional Decals

Safety decals and instructions are easily visible to the operator and are located near any area of potential danger. Replace any decal that is damaged or lost.

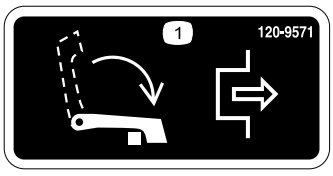

120-9571

1. Lower the lever to disengage the traction.

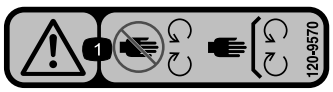

120-9570

1. Warning—stay away from moving parts, keep all guards and shields in place.

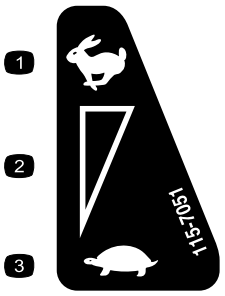

115-7051

1. Fast
2. Continuous variable setting
3. Slow

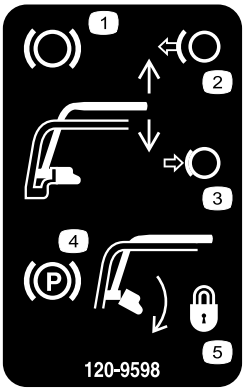

120-9598

1. Brake
2. Release handle to disengage the brake.
3. Compress the handle to engage the brake.
4. Parking brake
5. Rotate the latch to lock the parking brake; compress the handle to release the latch.

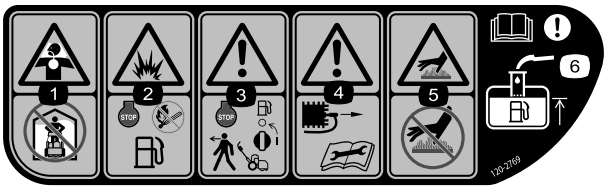

120–2769

1. Toxic gas inhalation hazard—do not operate indoors.
2. Explosion hazard—stop the engine and keep away from open flames when refueling.
3. Warning—stop the engine and turn off the fuel before leaving the machine.
4. Warning—disconnect the spark plug wire and read the instruction before servicing or performing maintenance.
5. Hot surface/burn hazard—do not touch hot surfaces.
6. Warning—read the *Operator's Manual*; when adding fuel to the tank, only fill to the bottom of the fill tube.

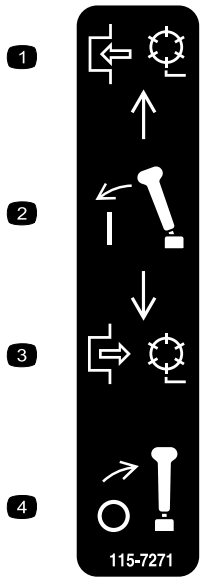

115-7271

1. Engage the reel.
2. Engage the lever.
3. Disengage the reel.
4. Disengage the lever.



120-9593

1. Read the *Operator's Manual*.
2. Warning—do not operate the machine unless you are trained.
3. Thrown object hazard—keep bystanders a safe distance from the machine.
4. Warning—stay away from moving parts, keep all guards and shields in place.
5. Do not tow the machine.

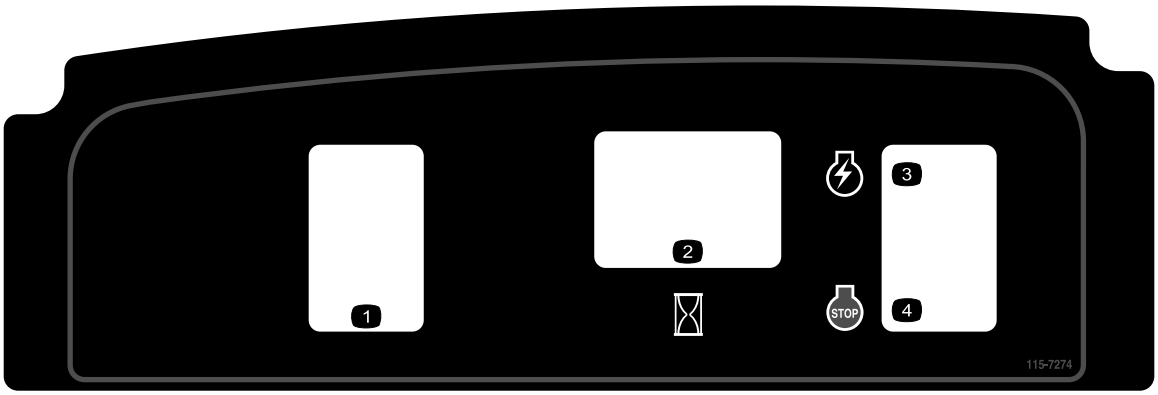

115-7274

1. Lights (optional)
2. Hour meter
3. Engine—start
4. Engine—stop

Setup

Loose Parts

Use the chart below to verify that all parts have been shipped.

Procedure	Description	Qty.	Use
1	Bolt, 3/8 x 3/4 inch	2	Install the cutting unit to the traction unit
2	Handle retainer Hair pin cotter	2 2	Install the handle retainers
3	Transport wheels (Optional Transport Wheel Kit, Model 04123)	2	Install the transport wheels.
4	No parts required	–	Check the engine oil level
5	Grass basket	1	Install the grass basket.

Media and Additional Parts

Description	Qty.	Use
Operator's Manual	1	Read or view before operating the machine
Engine Operator's Manual	1	
Parts Catalog	1	
Operator Training Material	1	
Certificate of Compliance	1	

Note: Determine the left and right sides of the machine from the normal operating position.

1

Installing the Cutting Unit to the Traction Unit

Parts needed for this procedure:

2	Bolt, 3/8 x 3/4 inch

Procedure

1. Place the mower on its drums on a level surface.
2. Lower the kick stand and push in the locking pin to lock the kick stand in the service position (Figure 3). Allow the machine to rest on the locking pin.

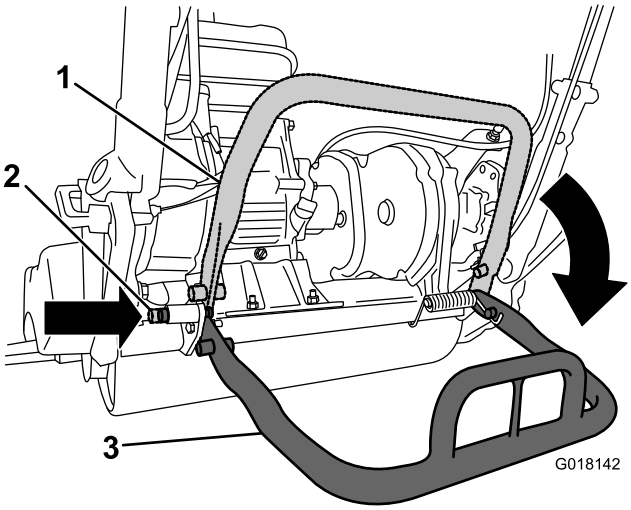

Figure 3

1. Kickstand—storage position
2. Locking pin
3. Kickstand—service position

3. Push the cutting unit under the traction unit and to the left to engage the transmission coupling (Figure 4).

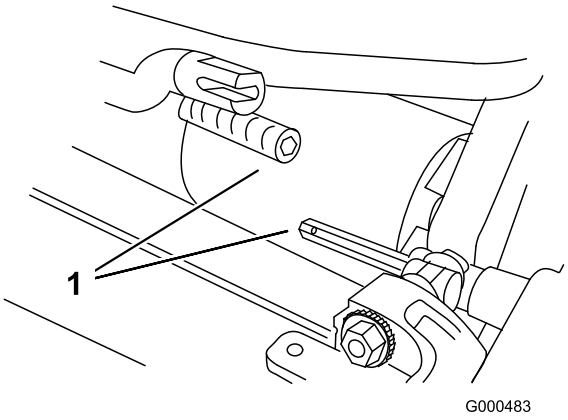

Figure 4

1. Transmission coupling

4. Maneuver the traction unit frame (Figure 5) forward until it engages the cutting unit pivot arms.

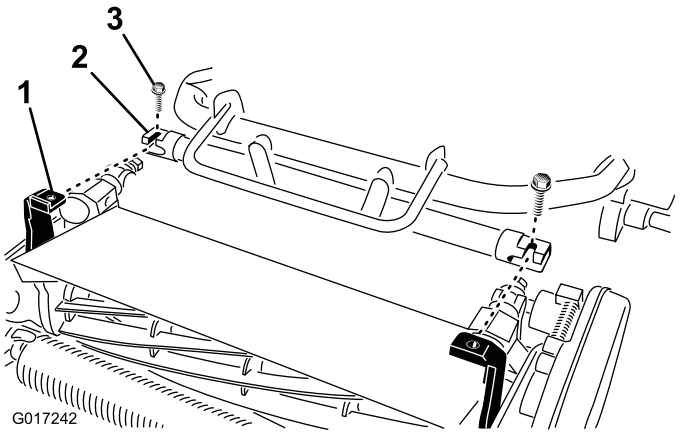

Figure 5

1. Cutting unit pivot arms
2. Traction unit frame
3. Bolts

5. Secure the traction unit frame to the cutting unit pivot arms with (2) 3/8 x 3/4 inch bolts (Figure 5).

   Note: To remove the cutting unit, just loosen the (2) 3/8 x 3/4 inch bolts approximately 1–1/2 turns and rotate the pivot arms out.

6. Push down on the kick stand to release the spring loaded locking pin and allow the kick stand to rotate up to the storage position.

2

Installing the Handle Retainers

Parts needed for this procedure:

2	Handle retainer
2	Hair pin cotter

Procedure

1. While supporting the handle, remove the cable ties securing the handle clamps to the side plates (Figure 6).

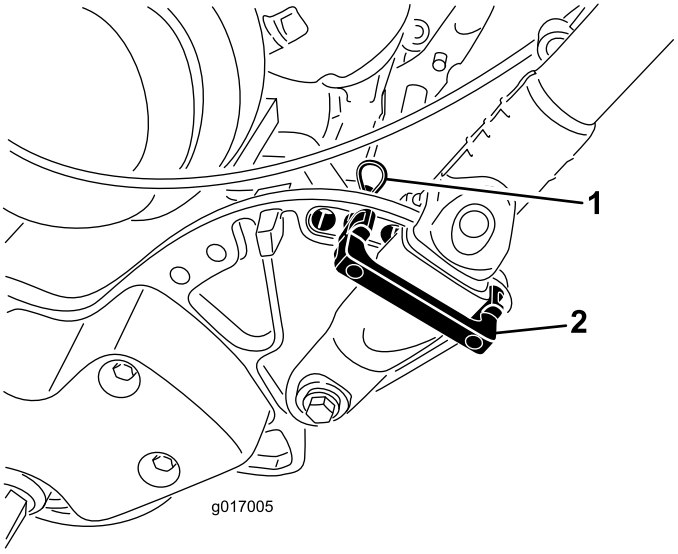

Figure 6

1. Hair pin cotter
2. Handle retainer

2. Pivot the handle to the desired operating position, insert a handle retainer over the handle clamp and into the matching holes in the side plate (Figure 6).
3. Secure the clamp in position with a hair pin cotter (Figure 6).
4. Repeat the procedure on the opposite side of the handle.
5. Adjust the handle height to the desired position; refer to Adjusting the Handle Height (page 18).

Note: The machine is shipped with the handle adjusted to the lowest position. The machine is traditionally operated with the handle telescoped out to its maximum height.

3

Installing the Transport Wheels

Parts needed for this procedure:

2	Transport wheels (Optional Transport Wheel Kit, Model 04123)

Procedure

1. Push the kick standdown with your foot **in the center of the kick stand** and pull up on the lower center machine handle until the kick stand has rotated forward, over center (Figure 7).

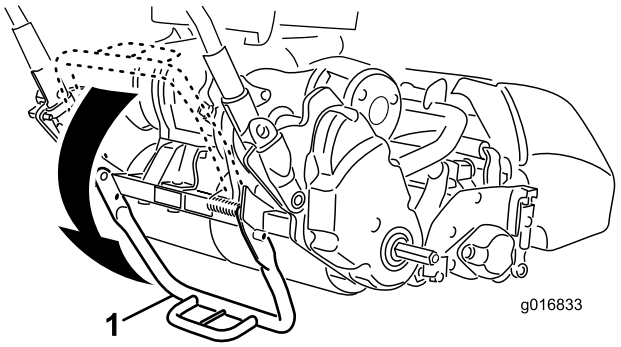

Figure 7

1. Kick stand

2. Press the wheel locking clip toward the center of wheel and slide the wheel onto the hex shaft (Figure 8).

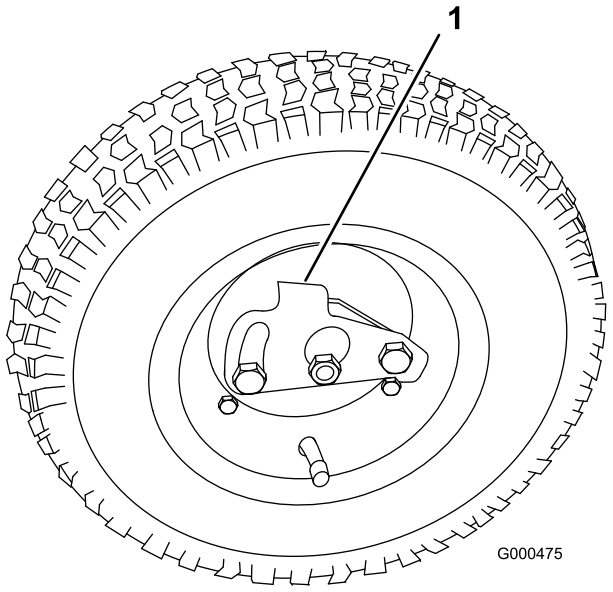

Figure 8

1. Locking clip

3. Rotate the wheel back and forth until it slides completely onto the axle and the locking clip is secured in the groove on the axle shaft.
4. Repeat the procedure on the opposite side of the machine.
5. Inflate the tires to 12-15 psi (83-103 kPa).
6. Carefully lower the machine off the kick stand by pushing forward slowly or by lifting the lower center handle support, allowing the kickstand to spring back to its normal position.

4

Checking the Engine Oil Level

No Parts Required

Procedure

Check the engine oil level, refer to Checking the Engine Oil Level (page 17).

5

Installing the Grass Basket

Parts needed for this procedure:

1	Grass basket

Procedure

1. Grasp the basket by the handle (Figure 9).

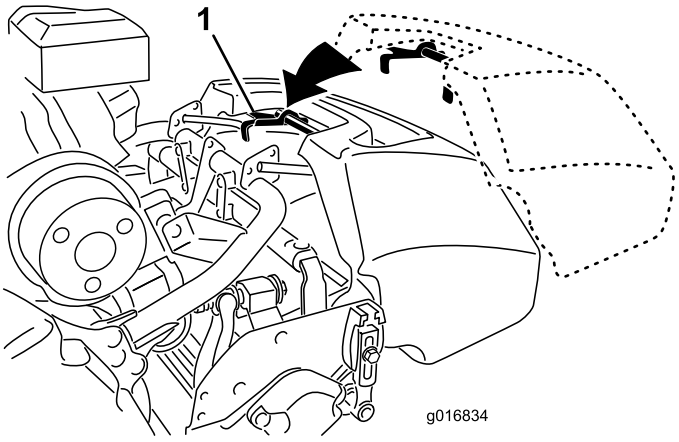

Figure 9

1. Basket hooks

2. Guide the basket lip between the cutting unit side plates and over the front roller (Figure 9).
3. Install the basket hooks over the frame loop (Figure 9).

Important: If you ever drop the basket, examine the pitch arm contact points near the lower lip of the basket for damage (Figure 10). Straighten them before using the basket. Using the basket with bent pitch arm contact points could damage the reel.

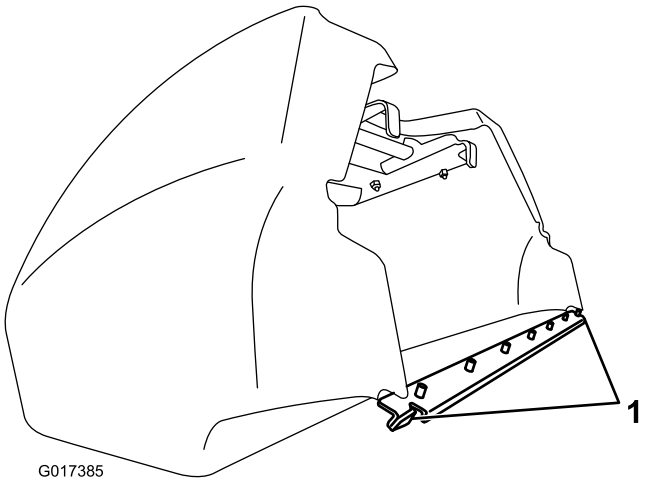

Figure 10

1. Pitch arm contact point

Product Overview

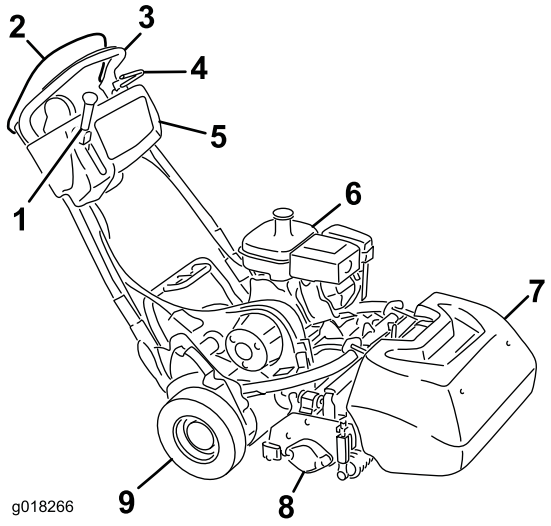

Figure 11

1. Traction & reel drive engagement lever
2. Operator presence control
3. Handle
4. Service brake
5. Control panel
6. Fuel tank
7. Grass basket
8. Cutting unit
9. Transport wheels

Controls

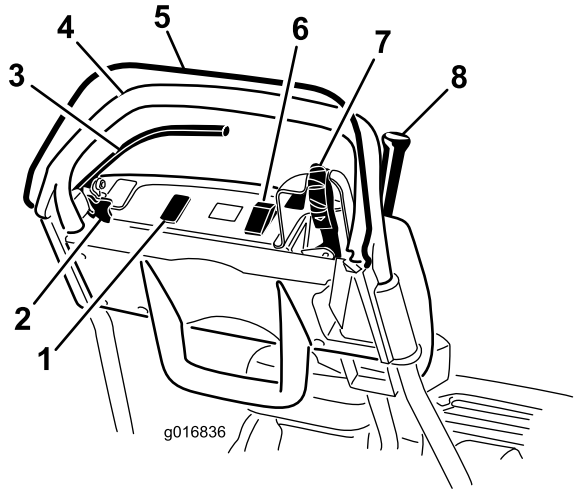

Figure 12

1. Open space for optional lights
2. Parking brake latch
3. Service brake
4. Handle
5. Operator presence control
6. On/off switch
7. Throttle control
8. Traction & reel drive engagement lever

Throttle Control

The throttle control (Figure 12 and Figure 13) is located on the right rear side of the control panel. Rotate the throttle to regulate the engine speed. The lever connects to and operates the throttle linkage to the carburetor. The engine speed can be varied from 1565 ±100 rpm to 3265 ±75 rpm.

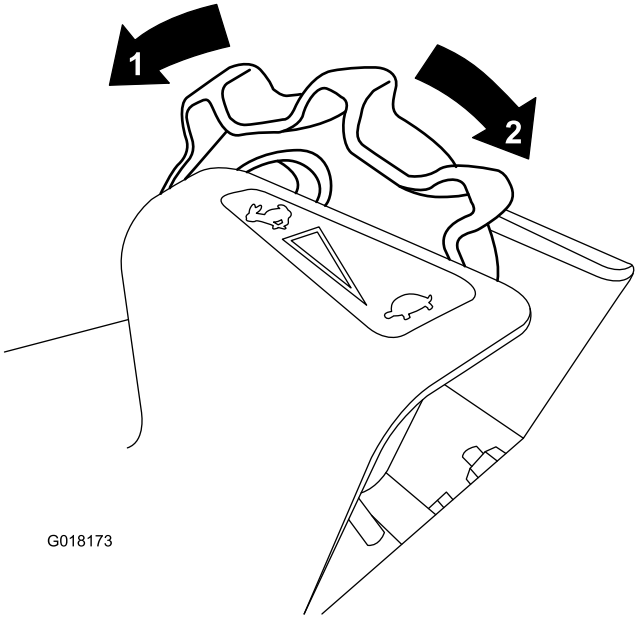

Figure 13

1. Full speed
2. Slow speed

Traction and Reel Drive Engagement Lever

The traction and reel drive engagement lever (Figure 14) is located on the front right side of the control panel. For transport operation, the lever has two positions: Neutral and Forward. Pushing the lever forward engages the traction drive.

Note: To move the lever you must first engage the operator presence control.

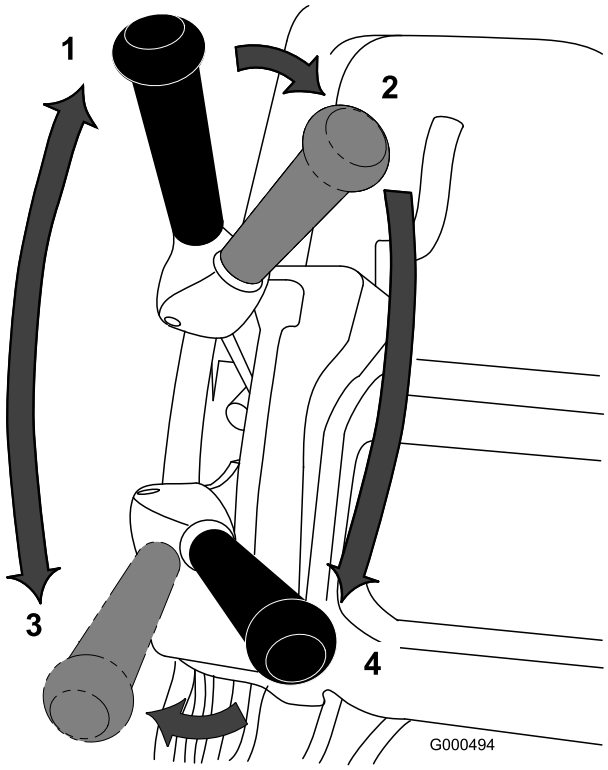

Figure 14

1. Neutral
2. Traction drive neutral & reel drive off
3. Traction drive-engaged (transport)
4. Traction drive & reel drive engaged

For reel operation, the lever has two positions: Engage and Disengage. Move the top of the lever to the left then forward to engage the reel and begin mowing. Push the lever to the right to disengage the reel and continue forward motion or pull back on it to disengage both the reel and the traction drive.

Note: If you release the operator presence control, the lever will return to Neutral and the machine will stop.

Service Brake

The service brake (Figure 15) is located on the left front side of the handle. Pulling the lever back will apply the service brake. The brake must be released before the traction drive is engaged.

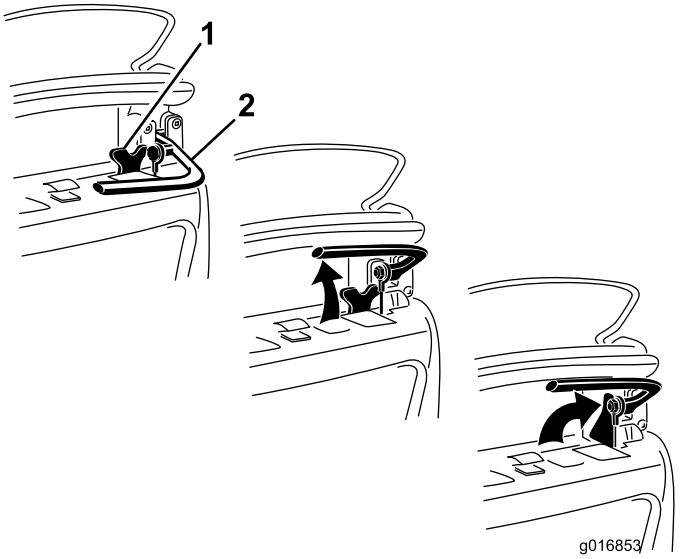

Figure 15

1. Parking brake latch
2. Service brake

Parking Brake Latch

The parking brake latch (Figure 15) is used in conjunction with the service brake. With the service brake engaged, rotate the parking brake latch toward the brake handle and release the service brake onto the latch to hold the service brake in place. Pull the brake lever to release it.

On/Off Switch

The on/off switch (Figure 12) is located on top of the control panel. Move the switch to the On position to start the engine and Off to stop the engine.

Operator Presence Control (OPC)

The operator presence control (Figure 12) must be engaged before engaging the traction lever. Releasing the OPC during operation will return the machine to neutral but does not kill the engine.

Choke Lever

The choke lever (Figure 16) located on the engine. The lever has two positions: Run and Choke. Move the choke lever to the half-open position when starting a cold engine. After the engine starts move the lever to the Run position.

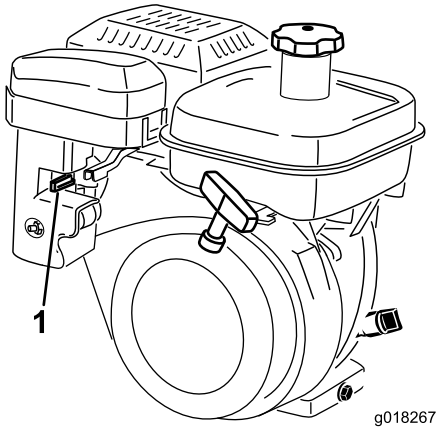

Figure 16

1. Choke lever in choke position

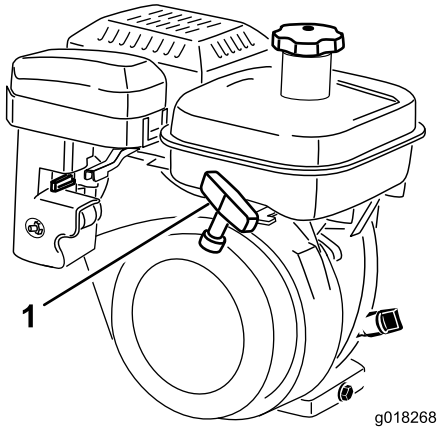

Figure 18

1. Recoil starter

Fuel Shut-Off Valve

The fuel shut-off valve (Figure 17) is located on the engine. The valve has two positions: Closed and Open. Move the lever to the closed position when storing or transporting machine. Open the valve before starting the engine. The fuel cup is located below the shut-off valve.

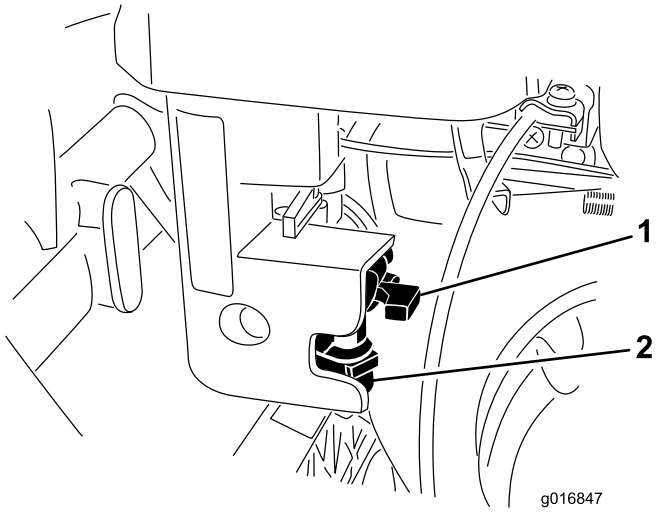

Figure 17

1. Fuel shut-off valve in closed position
2. Fuel cup

Recoil Starter

Pull the recoil starter handle (Figure 18) to start the engine.

Kickstand

The kickstand (Figure 20) is mounted to the rear of the machine and is used to raise the rear of the machine for installation or removal of the transport wheels and to keep the machine for falling onto the handle when you remove the reel.

- To use the kickstand to install the transport wheels, lower it to the ground and step down on the kickstand loop while pulling up and back on the lower center machine handle (Figure 19).

  Important: Only put foot pressure down on the kickstand loop, and only use the lower center machine handle to raise the unit. Attempting to raise the unit onto the kickstand by any other means can cause injury.

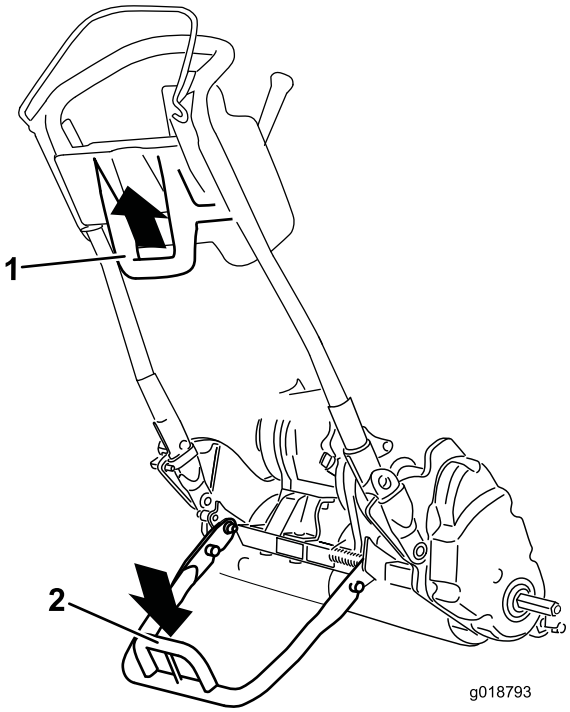

Figure 19

1. Lower center machine handle
2. Kickstand loop

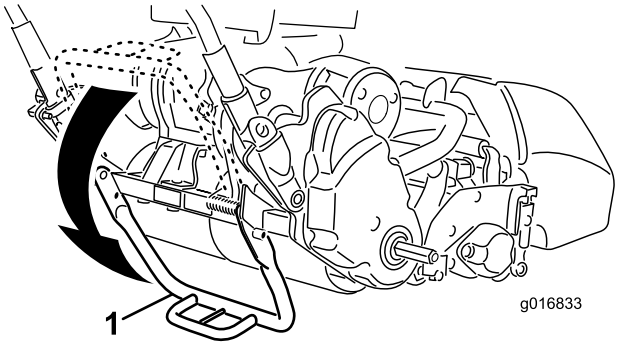

Figure 20

1. Kickstand
2. Kickstand loop

- To prevent the unit from tipping backwards when removing the reel, lower the kickstand and push in the locking pin to lock it in the service position (Figure 21).

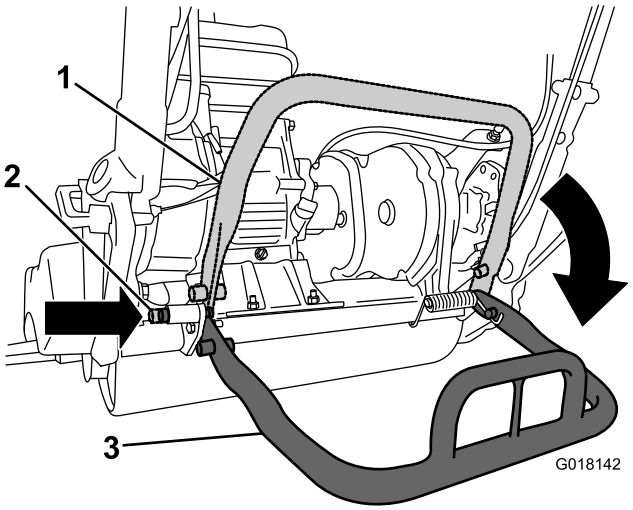

Figure 21

1. Kickstand—storage position
2. Locking pin
3. Kickstand—service position

Specifications

1800 Traction Unit

Width	32-1/2 inches (82.5 cm)
Height	41–1/4 inches (104.8 cm)
Length with basket	60 inches (152.4 cm)
Net Weight (with 11 blade cutting unit and grass basket installed)	258 lb (117 kg)
Width of cut	18 inches (46 cm)
Height of cut	1/16 to 19/64 inches (1.5 to 7.5 mm) with Micro-Cut bedknife
Clip frequency	Adjustable (Refer to Cutting Unit Operator's Manual)

2100 Traction Unit

Width	35-1/2 inches (90.1 cm)
Height	41–1/4 inches (104.8 cm)
Length with basket	60 inches (152.4 cm)
Net Weight (with 11 blade cutting unit and grass basket installed)	260 lb (117.9 kg)
Width of cut	21 inches (53.3 cm)
Height of cut	1/16 to 19/64 inches (1.5 to 7.5 mm) with Micro-Cut bedknife
Clip frequency	Adjustable (Refer to Cutting Unit Operator's Manual)

Attachments/Accessories

A selection of Toro approved attachments and accessories is available for use with the machine to enhance and expand

its capabilities. Contact your Authorized Service Dealer or Distributor or go to www.Toro.com for a list of all approved attachments and accessories.

Operation

Note: Determine the left and right sides of the machine from the normal operating position.

Think Safety First

Please carefully read all of the safety instructions and decals in the safety section. Knowing this information could help you or bystanders avoid injury.

Checking the Engine Oil Level

Check the engine oil level before each use or every 8 operating hours, refer to Checking the Engine Oil Level.

Filling the Fuel Tank

Fuel Tank Capacity: 3.0 l (0.8 US gallons)

- For best results, use only clean, fresh, unleaded gasoline with an octane rating of 87 or higher ((R+M)/2 rating method).
- Oxygenated fuel with up to 10% ethanol or 15% MTBE by volume is acceptable.
- **Do Not** use ethanol blends of gasoline (such as E15 or E85) with more than 10% ethanol by volume. Performance problems and/or engine damage may result which may not be covered under warranty.
- **Do Not** use gasoline containing methanol.
- **Do Not** store fuel either in the fuel tank or fuel containers over the winter unless a fuel stabilizer is used.
- **Do Not** add oil to gasoline.

⚠ WARNING

Gasoline is harmful or fatal if swallowed. Long-term exposure to vapors can cause serious injury and illness.

- **Avoid prolonged breathing of vapors.**
- **Keep face away from nozzle and gas tank or conditioner opening.**
- **Keep gas away from eyes and skin.**

⚠ DANGER

In certain conditions, gasoline is extremely flammable and highly explosive. A fire or explosion from gasoline can burn you and others and can damage property.

- **Fill the fuel tank outdoors, in an open area, when the engine is cold. Wipe up any gasoline that spills.**
- **Do not fill the fuel tank completely full. With the machine level, add gasoline to the fuel tank until level with the top flange of the plastic insert. This empty space in the tank is necessary to allow gasoline to expand.**
- **Never smoke when handling gasoline, and stay away from an open flame or where gasoline fumes may be ignited by a spark.**
- **Store gasoline in an approved container and keep it out of the reach of children. Never buy more than a 30-day supply of gasoline.**
- **Always place gasoline containers on the ground away from your vehicle before filling.**
- **Do not fill gasoline containers inside a vehicle or on a truck or trailer bed because interior carpets or plastic truck bed liners may insulate the container and slow the loss of any static charge.**
- **When practical, remove gas-powered equipment from the truck or trailer and refuel the equipment with its wheels on the ground.**
- **If this is not possible, then refuel such equipment on a truck or trailer from a portable container, rather than from a gasoline dispenser nozzle.**
- **If a gasoline dispenser nozzle must be used, keep the nozzle in contact with the rim of the fuel tank or container opening at all times until fueling is complete.**

1. Clean around the fuel tank cap and remove the cap from the tank (Figure 22). Using unleaded gasoline, fill the fuel tank no higher than to the bottom of the filter screen. Do not overfill.

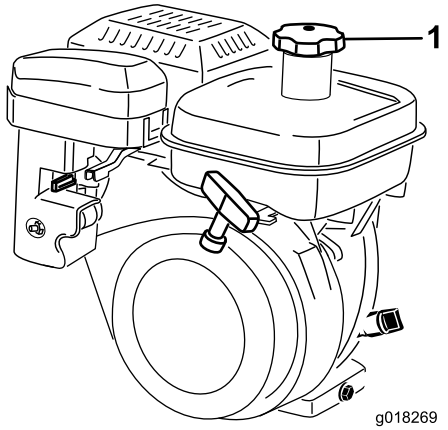

Figure 22

1. Fuel tank cap

2. Install the fuel tank cap and wipe up any spilled gasoline.

Adjusting the Handle Height

Note: The machine is shipped with the handle adjusted to the lowest position. The machine is traditionally operated with the handle telescoped out to its maximum height.

1. Loosen the 3 carriage bolts and nuts securing each side of the handle in the handle clamps (Figure 23).

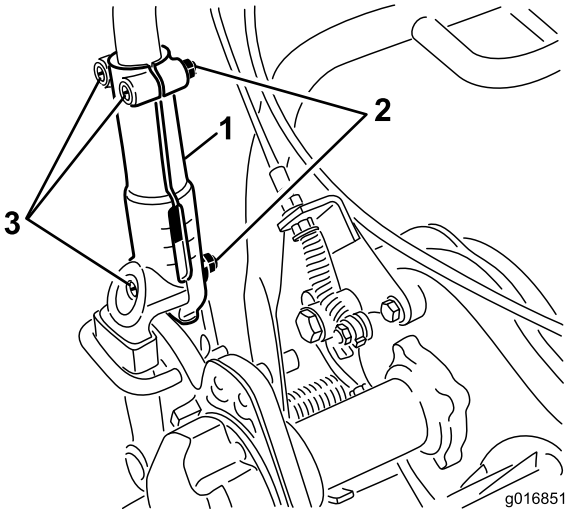

Figure 23

1. Handle clamp
2. Nut
3. Carriage bolts

2. Pull up on the handle slowly and evenly on each side until it is in the desired operating position.
3. Tighten the carriage bolts and nuts to lock the adjustment.

Adjusting the Handle Angle

1. Remove the hairpin cotters from the handle retainers on each side of the mower (Figure 24).

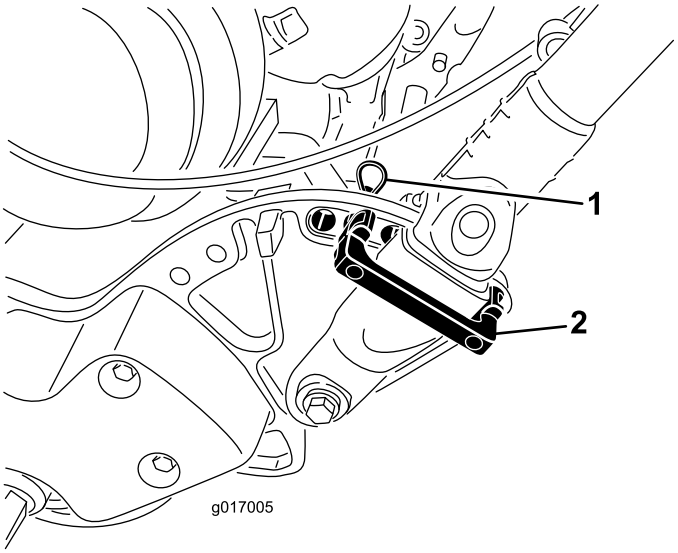

Figure 24

1. Hairpin cotter
2. Handle retainer

2. While supporting the handle, remove the hairpin cotters from each side and pivot the handle to the desired operating position (Figure 24).
3. Install the handle retainers and hairpin cotters.

Starting and Stopping the Engine

Note: For illustrations and descriptions of the controls referenced in this section, refer to the Controls section in Operation.

Starting the Engine

Note: Make sure the spark plug wire is installed on the spark plug.

1. Make sure the traction and reel drive levers are in the Disengaged position.

   Note: The engine will not start if the traction lever is in the engaged position.
2. Move the on/off switch to the On position.
3. Move the throttle control to the Fast position.
4. Open the fuel shut-off valve on the engine.
5. Move the choke lever to the half-open position when starting a cold engine. The choke may not be required when starting a warm engine.
6. Pull the recoil starter handle out until positive engagement results, then pull it vigorously to start the engine. Open the choke as the engine warms up.

   Important: Do not pull the recoil rope to its limit or let go of the starter handle when the rope is pulled out because the rope may break or recoil assembly may be damaged.

Stopping the Engine

1. Move the traction and reel drive controls to the Disengaged position, the throttle control to Slow, and the on/off switch to Off.
2. Pull the molded spark plug wire off of the spark plug to prevent the possibility of accidental starting before storing the machine.
3. Close the fuel shut-off valve before storing or transporting the mower in a vehicle.

Transport Operation

Note: Do not run the mower engine while transporting it in a transport trailer because damage can occur to the mower.

If the optional transport wheels are not going to be installed, proceed to step 4.

1. Push the kick stand down with foot and pull up on the handle support until the kick stand has rotated forward, over center.
2. Install the transport wheels.
3. To release the kickstand, pull up on the handle and lower the rear of the mower onto the transport wheels.
4. Ensure the traction and reel drive controls are in Disengage position and start engine.
5. Set the throttle control to Slow, tip the front of the machine up, gradually engage the traction drive and slowly increase the engine speed.
6. Adjust the throttle to operate the mower at the desired ground speed and transport the mower to the desired destination.

Preparing to Mow

1. Return the traction control lever to the Disengage, throttle to Slow and stop the engine.
2. Push the kick stand down with foot and pull up on the handle support until the kick stand has rotated forward, over center.
3. Remove the transport wheels.
4. Carefully lower the machine off the kick stand.

Mowing Operation

Proper use of the machine provides the smoothest turf cutting available.

Important: Grass clippings act as a lubricant when mowing. Excessive operation of the cutting unit with the absence of grass clippings can damage the cutting unit.

Prior to Mowing

Be sure the mower is carefully adjusted and is set evenly on both sides of the reel. Improper mower adjustment is

magnified in the appearance of the clipped turf. Remove all foreign objects from the turf prior to mowing. Make sure everyone, especially children and pets, are clear of the work area.

Method of Mowing

The greens should be mowed in a straight back and forth direction across the green. Avoid circular mowing or turning the mower on the greens areas since scuffing may occur. Turning the mower should be done off the green by raising the cutting reel (pushing the handle down) and turning on the traction drum. Mowing should be done at a normal walking pace. Fast speeds saves very little time and will result in an inferior mowing job.

To assist in maintaining a straight line across the green and to keep the machine an equal distance from the edge of the previous cut, use the alignment stripes on the basket (Figure 25).

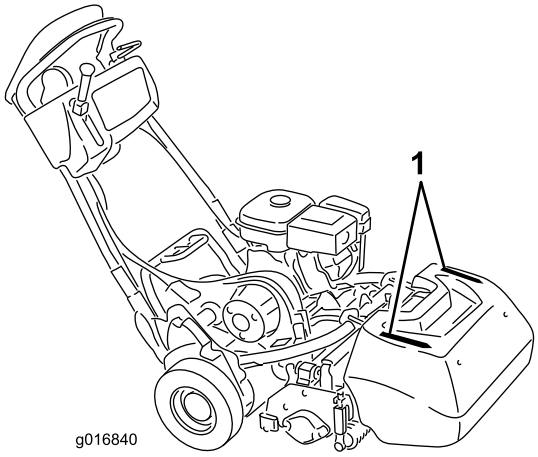

Figure 25

1. Alignment stripes

Operating in Low Light Conditions

When operating the mower in low light conditions, it is recommended that the optional LED Light Kit, Model 04265, be used.

Important: Do not use other light systems with this mower as they will not operate properly with the engine AC output.

Control Operation

To operate the controls while mowing:

1. Start the engine, set the throttle to a reduced speed, push down on the handle to raise the cutting unit, depress the operator presence control, move the traction lever to the Engaged position and transport the mower onto the collar of the green (Figure 26).
2. Move the traction lever to the Disengaged position and Engage the reel drive lever (Figure 26).

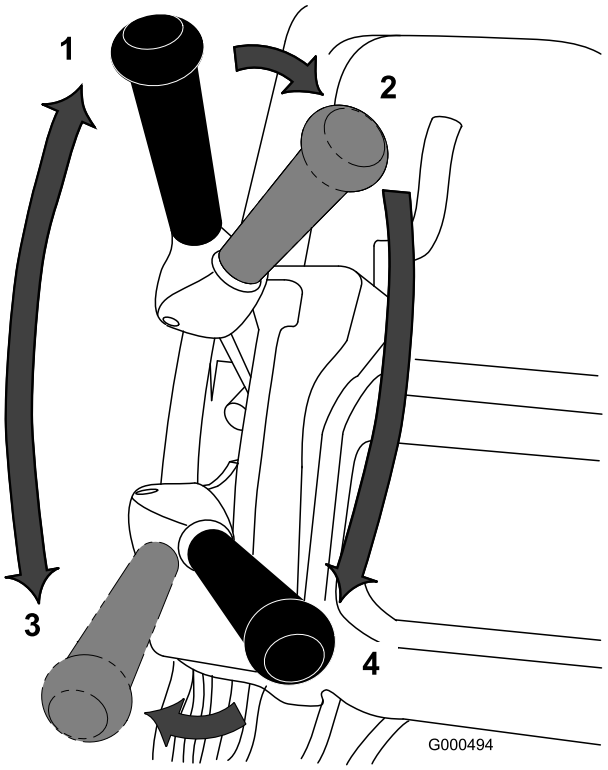

Figure 26

1. Traction drive -neutral
2. Traction drive neutral & reel drive off
3. Traction drive-engaged (transport)
4. Traction drive & reel drive engaged

3. Move the traction lever to the Engaged position, increase the throttle speed until the mower is traveling at the desired ground speed, drive the mower out onto the green area, lower the front of the mower down and commence operation (Figure 26).

After Mowing

1. Drive off the green, move the reel drive and traction control levers to the Disengage position and stop the engine.
2. Empty the grass basket of clippings, install the grass basket on the mower and commence the transport operation.

Checking the Operation of the Interlock Switches

Service Interval: Before each use or daily

⚠ CAUTION

If safety interlock switches are disconnected or damaged the machine could operate unexpectedly causing personal injury.

- **Do not tamper with the interlock switches.**
- **Check the operation of the interlock switches daily and replace any damaged switches before operating the machine.**

Operator Presence Control (OPC) Interlock Switch

1. Push the kick stand down with foot and pull up on the handle support until the kick stand has rotated forward, over center.
2. Start the engine.
3. With the OPC released, attempt to engage the traction lever (Figure 27). The traction lever should not engage. If the traction lever engages, the interlock system needs service. Correct the problem before operating. Refer to Servicing Interlock Switches.

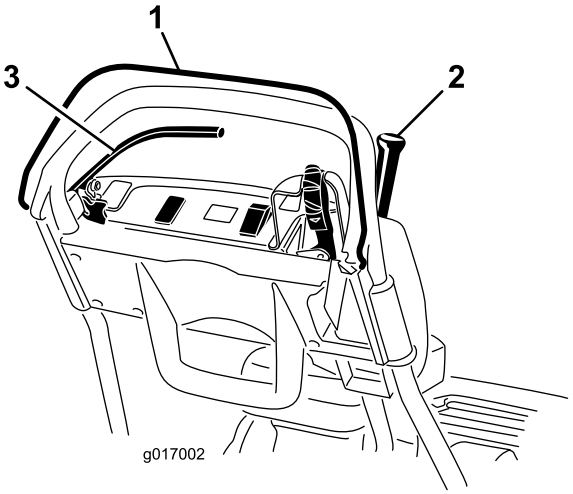

Figure 27

1. Operator presence control (OPC)
2. Traction lever
3. Brake lever

4. With the OPC depressed and the traction lever engaged, release the OPC (Figure 27). The traction lever should disengage. If the traction lever does not disengage, the interlock system needs service. Correct the problem before operating. Refer to Servicing Interlock Switches or Adjusting the Traction Control.
5. With the OPC depressed and the shift lever moved to the left, engage the traction and reel drive, release the OPC (Figure 27). The traction lever should disengage. If the traction lever does not disengage, the interlock system needs service. Correct the problem before operating. Refer to Servicing Interlock Switches, Adjusting the Traction Control, or Adjusting the Reel Control.
6. With the OPC depressed and the shift lever moved to the left to engage the traction and reel drive, move the shift lever to the right to disengage the reel drive (Figure 27). The reel drive should disengage. If the traction lever does not disengage, the interlock system needs service. Correct the problem before operating. Refer to Adjusting the Reel Control.
7. Carefully lower the machine off the kick stand.

Traction Interlock Switch

1. Push the kick stand down with foot and pull up on the handle support until the kick stand has rotated forward, over center.
2. With the OPC depressed, the traction lever engaged and the engine controls in the starting position (Figure 27). Attempt to start the engine. Engine should not start. If engine starts, the interlock switch needs service. Correct the problem before operating. Refer to Servicing Interlock Switches.
3. Carefully lower the machine off the kick stand.

Brake Interlock Switch

1. Push the kick stand down with foot and pull up on the handle support until the kick stand has rotated forward, over center.
2. With the traction lever disengaged, the service brake engaged and the engine controls in the starting position (Figure 27). Attempt to start engine. Engine should start. If engine does not start, the interlock switch needs service. Correct the problem before operating. Refer to Servicing Interlock Switches.
3. With the engine running, engage the service brake (not the parking brake), depress the OPC and engage the traction lever (Figure 27). Engine should labor to overcome the brake but should not kill. If the engine kills immediately, the interlock switch needs service. Correct the problem before operating. Refer to Servicing Interlock Switches.
4. With the engine running, engage the parking brake latch, depress the OPC and engage the traction lever (Figure 27). Engine should kill. If engine does not kill, the interlock switch needs service. Correct the problem before operating. Refer to Servicing Interlock Switches.
5. Carefully lower the machine off the kick stand.

Releasing the Transmission

If the machine becomes disabled, you can disengage the drum from the transmission to allow the machine to be maneuvered.

1. On the right rear corner of the machine, locate the traction engage/disengage lever next to the drive housing drum (Figure 28).

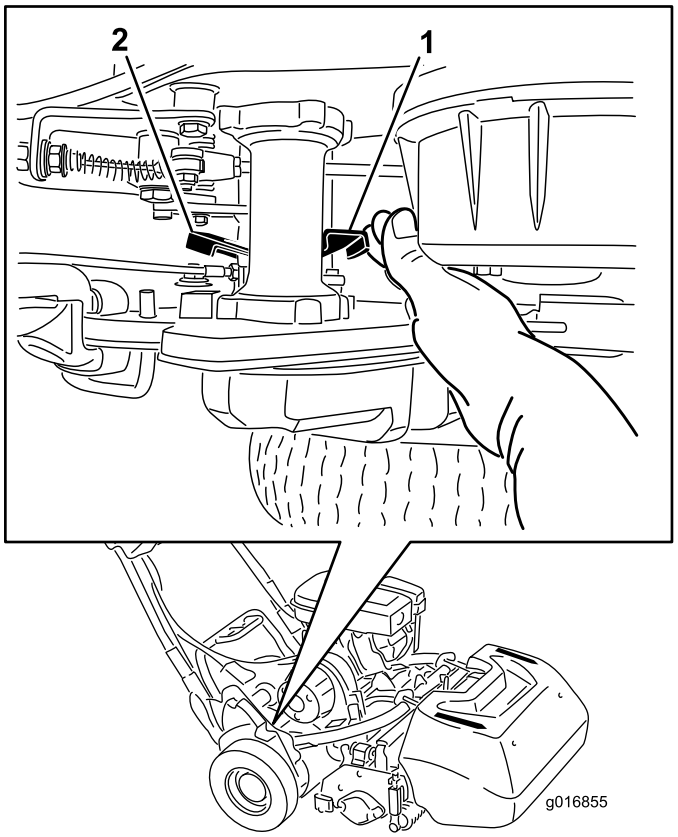

Figure 28

1. Traction engage/disengage lever-engaged
2. Traction engage/disengage lever-disengaged

2. Rotate the lever rearward to disengage the transmission from the drum.

   Important: Make sure to push the lever from the front to prevent your hand from being struck by the spring loaded lever.

3. Move the machine as needed

   Important: If possible, do not tow the machine. If it is absolutely necessary, do not tow at any speed greater than 3 mph (4.8 kph); always disengage the transmission from the drum. Failing to do so will likely cause damage to the machine.

4. When finished, rotate the lever forward to engage the transmission to the drum.

Note: The brake is still operational with the transmission disengaged from the drum.

Setting the Machine to Match Turf Conditions

Use the following table to set the machine to match turf conditions.

Bedbars: Standard and Optional (Flex/eFlex 2100 Mowers)			
Part Number	**Description**	**Aggressiveness**	**Comments**
106-2468-01	Non-Aggressive	Less	Red
99-3794-03	Aggressive	More	Black, Standard
Bedbars: Standard and Optional (Flex/eFlex 1800 Mowers)			
110-2282-01	Non-Aggressive	Less	Red
110-2281-03	Aggressive	More	Black, Standard

Bedknives: Standard and Optional (Flex/eFlex 2100 Mowers)			
Part Number	**Description**	**Height-of-cut Range**	**Comments**
115-1880	Microcut-EdgeMax	0.062 to 0.125 inches (1.6 to 3.2 mm)	Standard
93-4262	Microcut	0.062 to 0.125 inches (1.6 to 3.2 mm)	
108-4303	Extended Microcut	0.062 to 0.125 inches (1.6 to 3.2 mm)	Less aggressive
115-1881	Tournament- EdgeMax	0.125 to 0.25 inches (3.2 to 6.4 mm)	
93-4263	Tournament	0.125 to 0.25 inches (3.2 to 6.4 mm)	
108-4302	Extended Tournament	0.125 to 0.25 inches (3.2 to 6.4 mm)	Less aggressive
93-4264	Low Cut	0.25 inches (6.4 mm) and up	
Bedknives: Standard and Optional (Flex/eFlex 1800 Mowers)			
117-1530	Microcut-EdgeMax	0.062 to 0.125 inches (1.6 to 3.2 mm)	Standard
98-7261	Microcut	0.062 to 0.125 inches (1.6 to 3.2 mm)	
110-2300	Extended Microcut	0.062 to 0.125 inches (1.6 to 3.2 mm)	Less aggressive
98-7260	Tournament	0.125 to 0.25 inches (3.2 to 6.4 mm)	
117-1532	Tournament- EdgeMax	0.125 to 0.25 inches (3.2 to 6.4 mm)	
110-2301	Low Cut	0.25 inches (6.4 mm) and up	

Rollers (Flex/eFlex 2100 Mowers)			
Part Number	**Description**	**Diameter/Material**	**Comments**
04255	Narrow Wiehle	2.5 inches (6.4 cm)/Aluminum	
04256	Wide Wiehle	2.5 inches (6.4 cm)/Aluminum	More penetration
04257	Full Roller	2.5 inches (6.4 cm)/Steel	Least penetration
04258	Narrow Wiehle—Long	2.5 inches (6.4 cm)/Aluminum	More edge support; 1.7 inches (4.3 cm) longer
115-7356	Rear Roller	2.0 inches (5.1 cm)/Aluminum	Standard rear
120-9595	Rear Roller	2.0 inches (5.1 cm)/Steel	Steel rear
Rollers (Flex/eFlex 1800 Mowers)			
120-9607	Narrow Wiehle	2.5 inches (6.4 cm)/Aluminum	
120-9609	Wide Wiehle	2.5 inches (6.4 cm)/Aluminum	More penetration
120-9611	Full Roller	2.5 inches (6.4 cm)/Steel	Least penetration
121-4681	Narrow Wiehle—Long	2.5 inches (6.4 cm)/Aluminum	More edge support; 1.7 inches (4.3 cm) longer
120-9605	Rear Roller	2.0 inches (5.1 cm)/Aluminum	Standard rear

Maintenance

Note: Determine the left and right sides of the machine from the normal operating position.

Important: When using the unit in conjunction with the Trans Pro 80, always use the stops on the trailer when servicing the machine. Over tipping can result in fuel spillage.

The stop on the Rail Ramp Kit requires a broom handle or similar item to be inserted through the holes behind the wheels.

Recommended Maintenance Schedule(s)

Maintenance Service Interval	Maintenance Procedure
After the first 20 hours	• Change the engine oil. • Clean the fuel cup and screen.
Before each use or daily	• Check the operation of the interlock switches. • Check the engine oil level. • Check the Operator Presence Control Interlock system
Every 50 hours	• Change the engine oil. • Clean the air cleaner (more often in dirty or dusty conditions).
Every 100 hours	• Replace the paper air filter element (more often in dirty or dusty conditions). • Check the spark plug. • Clean the fuel cup and screen.
Every 500 hours	• Clean the carburetor • Inspect the intake and exhaust valves. Adjust as necessary.
Every 1,000 hours	• Replace the fuel line • Inspect the reel drive belt • Inspect the transmission bearings Replace as necessary
Before storage	• Paint chipped surfaces.

Important: Refer to your engine operator's manual for additional maintenance procedures.

Daily Maintenance Checklist

Important: Duplicate this page for routine use.

Maintenance Check Item	For the week of:						
	Mon.	Tues.	Wed.	Thurs.	Fri.	Sat.	Sun.
Check the safety interlock operation.							
Check the parking brake operation.							
Check that pivot joints operate freely.							
Check the fuel level.							
Check the engine oil level.							
Check the air filter.							
Clean the engine cooling fins.							
Check for unusual engine noises.							
Check for unusual operating noises.							
Check the reel-to-bedknife adjustment.							
Check the height-of-cut adjustment.							
Touch up damaged paint.							

Notation for Areas of Concern		
Inspection performed by:		
Item	Date	Information

Engine Maintenance

Servicing the Engine Oil

The crankcase must be filled with approximately 20 fluid ounces (.6 l) of the proper viscosity oil before staring. The engine uses any high-quality oil having the American Petroleum Institute - APl - “service classification" SE or higher. Oil viscosity - weight - must be selected according to ambient temperature. Figure 29 illustrates the temperature/viscosity recommendations.

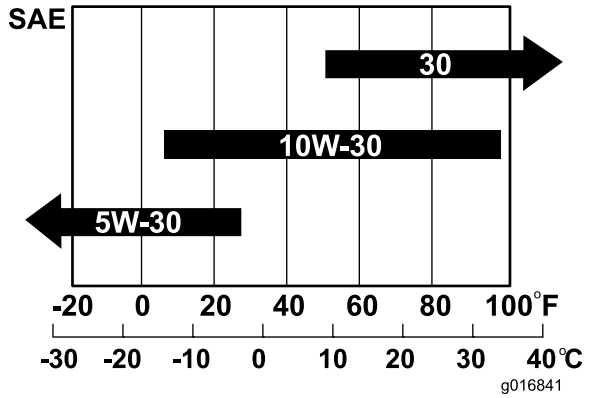

Figure 29

Note: Using multi-grade oils (5W-20, 10W-30 and 10W-40) will increase oil consumption. Check the oil level more frequently when using them.

Checking the Engine Oil Level

Service Interval: Before each use or daily

Note: The best time to check the engine oil is when the engine is cool, before it has been started for the day. If it has already been run, allow the oil to drain back down to the sump for at least 10 minutes before checking. If the oil level is at or below the “L” mark on the dipstick, add oil to bring the oil level to the “H” mark. DO NOT OVERFILL. If the oil level is between the “H” and “L” marks, no oil addition is required.

1. Remove the transport wheels (if installed).
2. Position the mower so the engine is level and clean around the oil level gauge (Figure 30).

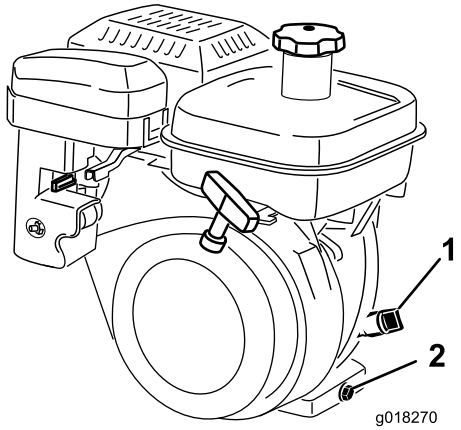

Figure 30

1. Oil level gauge
2. Drain plug

3. Remove the oil level gauge by rotating it counterclockwise (Figure 30).
4. Wipe the oil level gauge clean and insert it into the filler port. Do not screw the gauge into the port. Then remove and check the level of the oil. If the level is low, add only enough oil to raise the level until it is between the “H” and “L” marks on the gauge (Figure 30). Recheck the level of the oil. Do not overfill.

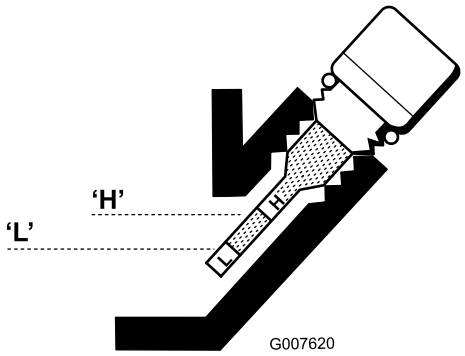

Figure 31

5. Reinstall the oil level gauge and wipe up any spilled oil.

Changing the Engine Oil

Service Interval: After the first 20 hours

Every 50 hours

1. Start and run the engine for a few minutes to warm the engine oil.
2. At the rear of the machine, place a drain pan under the drain plug (Figure 30). Loosen the drain plug.
3. Push down on the handle to tip the mower and engine backward, allowing all the oil to run into the drain pan.
4. Install the drain plug and refill the crankcase with the specified oil; refer to Checking the Oil Level.
5. Wipe up any spilled oil.

6. Dispose of the used oil properly. Recycle as per local codes.

Servicing the Air Cleaner

Service Interval: Every 50 hours

1. Make sure the wire is off the spark plug.
2. Remove the wing nut securing the air cleaner cover to the air cleaner and remove the cover. Clean the cover thoroughly (Figure 32 and Figure 33).

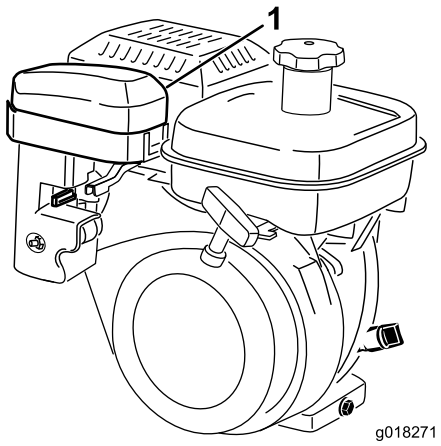

Figure 32

1. Air cleaner cover

3. If the foam element is dirty, remove it from the paper element (Figure 33). Clean it thoroughly.
   A. Wash the foam element in a solution of liquid soap and warm water. Squeeze it to remove the dirt, but do not twist it because the foam may tear.
   B. Dry by wrapping in a clean rag. Squeeze the rag and foam element to dry, but do not twist because the foam may tear.
   C. Saturate the element with clean engine oil. Squeeze the element to remove the excess oil and to distribute the oil thoroughly. An oil damp element is desirable.

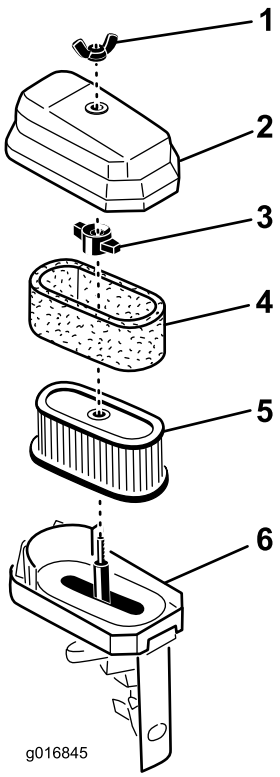

Figure 33

1. Wing nut
2. Air cleaner cover
3. Wing nut
4. Foam element
5. Paper element
6. Air cleaner base

4. When servicing the foam element, check the condition of the paper element. Replace as required.

   Note: Do not use compressed air to clean the paper element.

5. Install the foam element, paper element, and air cleaner cover.

   Important: Do not operate the engine without the air cleaner element because extreme engine wear and damage will likely result.

Servicing the Spark Plug

Service Interval: Every 100 hours

Use an NGK BR 6HS spark plug or equivalent. The correct air gap is 0.024-0.028 inch (.6-.7 mm).

1. Pull the molded wire off the spark plug (Figure 34).

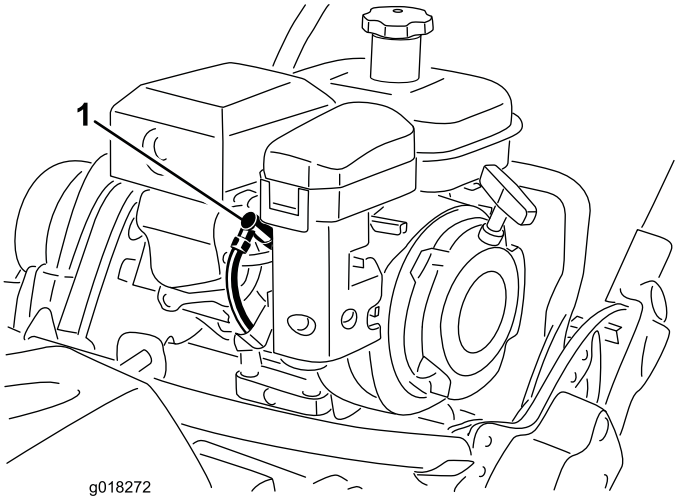

Figure 34

1. Spark plug wire

2. Clean around the spark plug and remove the plug from the cylinder head.

   Important: Replace a cracked, fouled, or dirty spark plug. Do not sand blast, scrape, or clean the electrodes because engine damage could result from grit entering the cylinder.

3. Set the air gap at 0.024-0.028 inch (.6-.7 mm) (Figure 35). Install the correctly gapped spark plug and tighten it firmly to 17 ft.-lb (23 N-m).

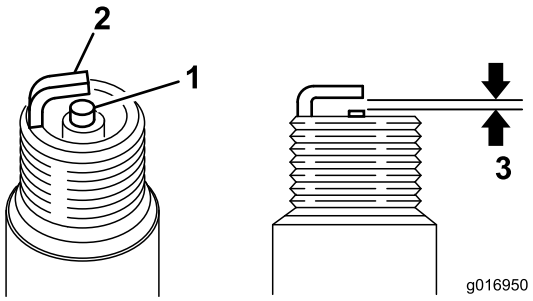

Figure 35

1. Center electrode insulator
2. Side electrode
3. Air gap – 0.024-0.028 inch (.6-.7 mm)

Fuel System Maintenance

Cleaning the Fuel Cup and Screen

Service Interval: After the first 20 hours

Every 100 hours/Monthly (whichever comes first)

1. Close the fuel shut off valve and unscrew the fuel cup from the filter body (Figure 36).

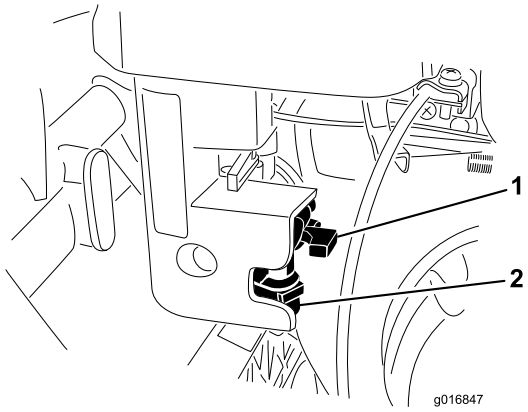

Figure 36

1. Shut off valve
2. Fuel cup

2. Clean the fuel cup in clean gasoline and reinstall.
3. Unscrew and remove the fuel tank cap from the fuel tank (Figure 37).

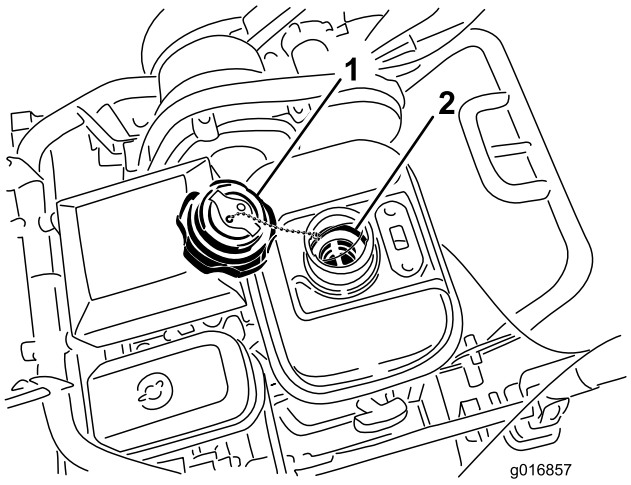

Figure 37

1. Fuel tank cap
2. Fuel tank screen

4. Remove the fuel tank screen from inside the fuel tank.
5. Clean the screen in clean gasoline and reinstall in the tank.
6. Install the fuel tank cap to the fuel tank.

Replacing the Fuel Line

Service Interval: Every 1,000 hours

Replace the fuel line after every 1000 hours. If fuel leaks from the line, replace it immediately.

Electrical System Maintenance

Servicing the Traction Interlock Switch

Use the following procedure if the switch needs adjustment or replacement.

1. Make sure the engine is off.
2. Remove the control panel.
3. Engage the traction lever.

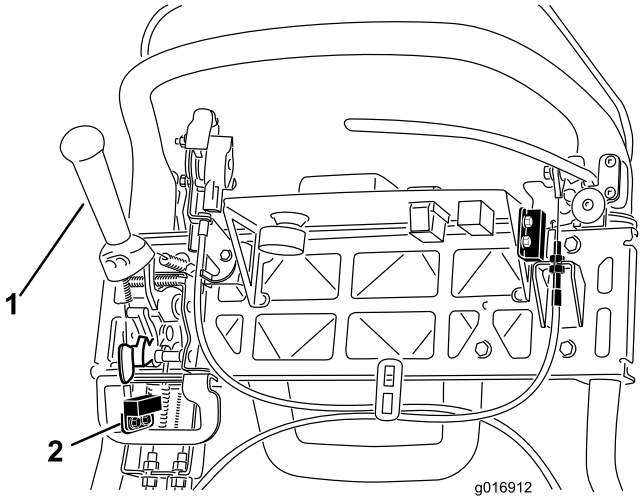

Figure 38

1. Traction lever
2. Interlock switch

4. Loosen the interlock switch mounting fasteners (Figure 38).
5. Place a .062 inch (1.6 mm) thick shim between the traction lever and the interlock switch (Figure 38).
6. Tighten the interlock switch mounting fasteners.
7. Engage the traction lever and check the gap. The normal operating range is between .03–.12 inches (.76–3.05 mm). With the traction lever engaged, verify that the switch loses continuity. Replace the switch, if required.

Servicing the Brake Interlock Switch

1. Make sure the engine is off.
2. Remove the control panel.
3. Engage the service brake lever and engage the parking brake latch.
4. Loosen the interlock switch mounting fasteners (Figure 39).

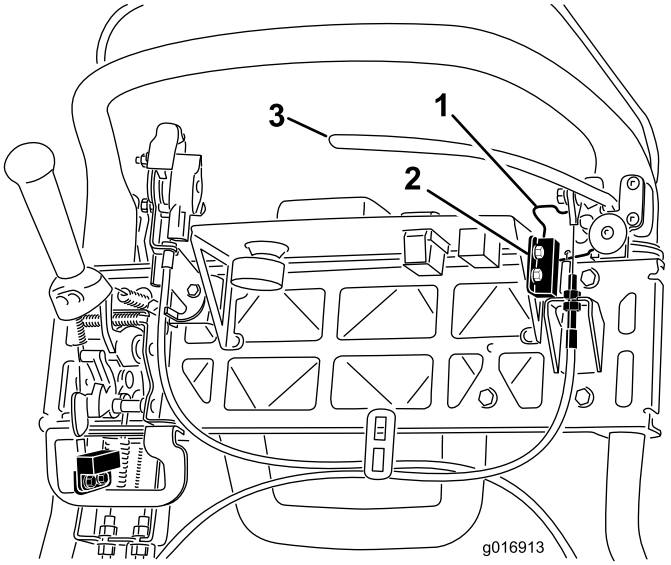

Figure 39

1. Parking brake latch
2. Interlock switch
3. Service brake lever

5. Place a .062 inch (1.6 mm) thick shim between the parking brake latch and the interlock switch (Figure 39).
6. Tighten interlock switch mounting fasteners. Recheck gap. The latch must not contact the switch.
7. Engage the brake lever and rotate the latch. Verify that the switch loses continuity. Replace the switch, if required.

Brake Maintenance

Adjusting the Service/Parking Brake

If the service/parking brake slips when operated, an adjustment to the cable is required.

1. Move the service/parking brake lever to the Off position.
2. Remove the control panel.
3. To increase the cable tension, loosen the upper cable jam nut and tighten the lower cable jam nut (Figure 40) until a force of 35 lb. (156 N) applied to the brake lever handle, is required to release the parking brake latch. Do not over adjust, or the brake band may drag.

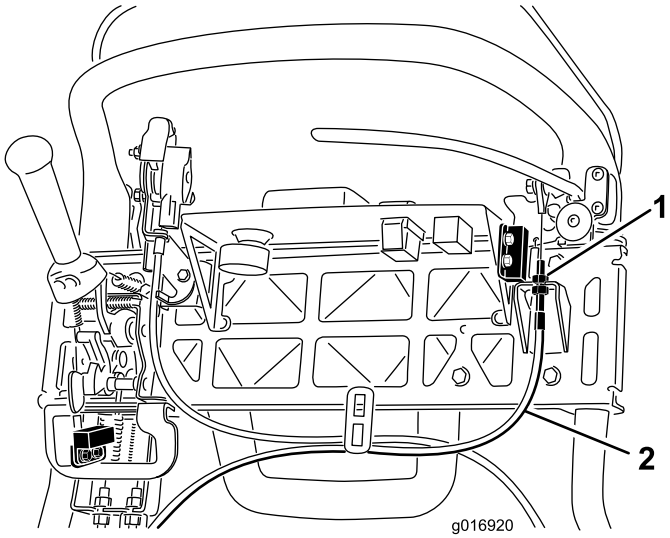

Figure 40

1. Jam nuts
2. Service brake cable

Belt Maintenance

Inspecting the Reel Drive Belt

Service Interval: Every 1,000 hours

Make sure the reel drive belt is properly tensioned to assure proper operation of the machine and unnecessary wear. Check belt frequently.

1. Loosen the flange bolt securing the belt cover and remove the belt cover to expose the belt (Figure 41).

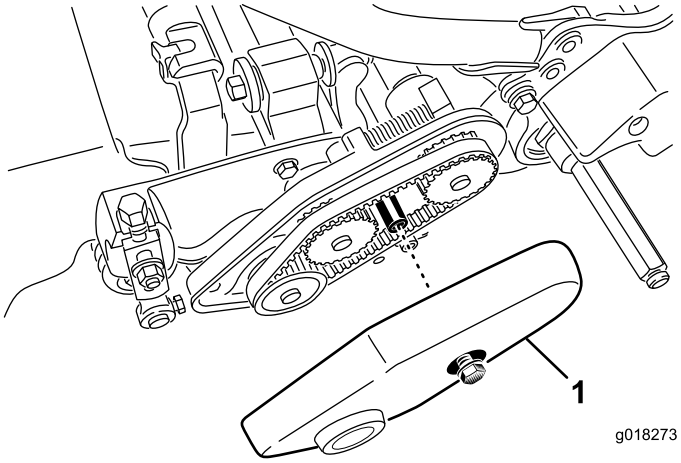

Figure 41

1. Belt cover

2. To adjust the belt tension:
   A. Loosen the bearing housing mounting nut (Figure 42).

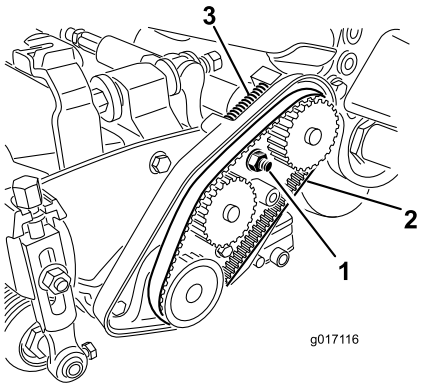

Figure 42

1. Bearing housing mounting nut
2. Reel drive belt
3. Compression spring

   B. Using a 5/8 inch (16 mm) wrench, rotate the bearing housing to make sure it operates freely.
   C. Clean any debris from inside the belt compartment and from around the compression spring (Figure 42).
   D. Make sure the compression spring is applying the proper tension on the belt.
   E. Tighten the bearing housing mounting nut.
   F. Install the belt cover.

Transmission Cover Access Hole

Remove the rubber plug (Figure 43) from the hole in the front of the transmission if access to the clutch is needed.

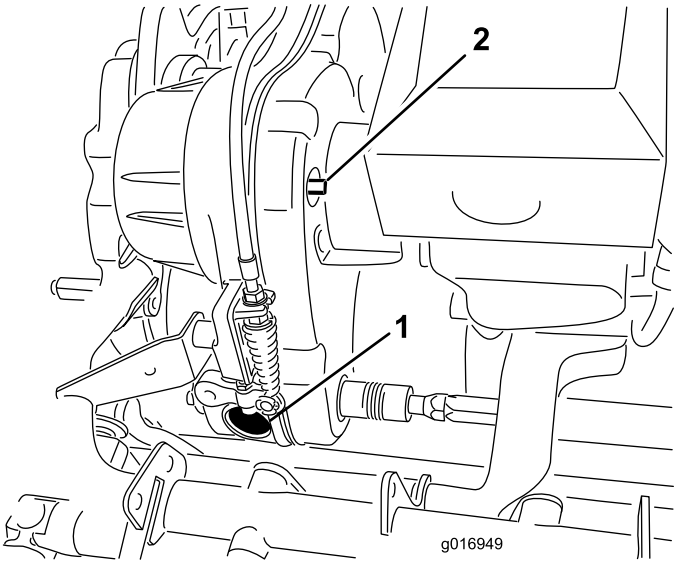

Figure 43

1. Rubber hole plug
2. Engage/disengage shaft

Transmission Belt Tensioner

The transmission belt is tensioned by a spring loaded idler pulley. If the belt tension has to be engaged/disengaged, use a 3/8 inch wrench to rotate the engage/disengage shaft (Figure 43) to the desired position. Rotating the shaft 1/4 turn clockwise will disengage the idler from the belt (Figure 44).

Note: The belt tension must be disengaged prior to removing the transmission cover.

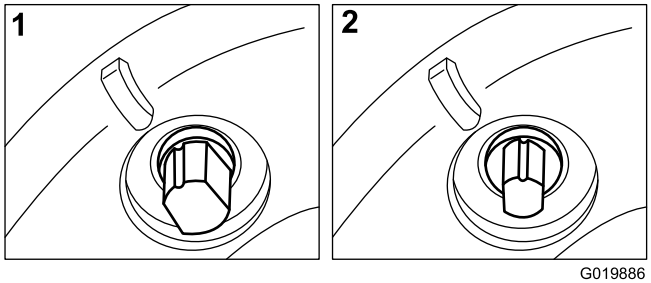

Figure 44

1. Engaged
2. Disengaged

Controls System Maintenance

Adjusting the Traction Control

If the traction control does not engage or it slips during operation, an adjustment is required.

1. Move the traction control to the Disengaged position.
2. Check to see if there is any slack in the traction control cable at the extension spring (Figure 45). If slack exists, adjust the jam nuts at the bulkhead (Figure 46) to remove the slack from the cable without extending the spring.

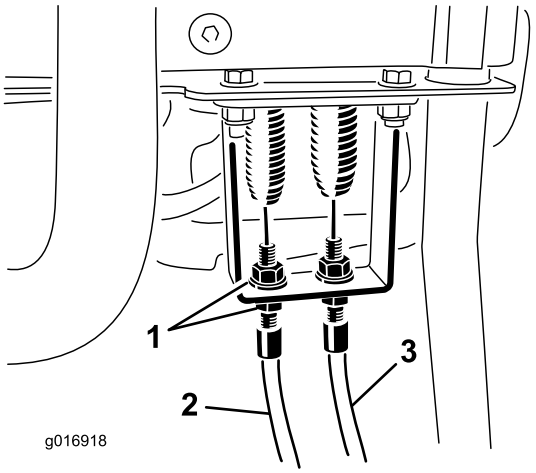

Figure 45

1. Jam nuts
2. Traction control cable
3. Reel control cable

3. If the traction control continues to slip, follow the remaining steps.
4. Remove the cotter pin and clevis pin securing the bell crank rod clevis to the bell crank lever. Disconnect the clevis from the bell crank lever (Figure 46).

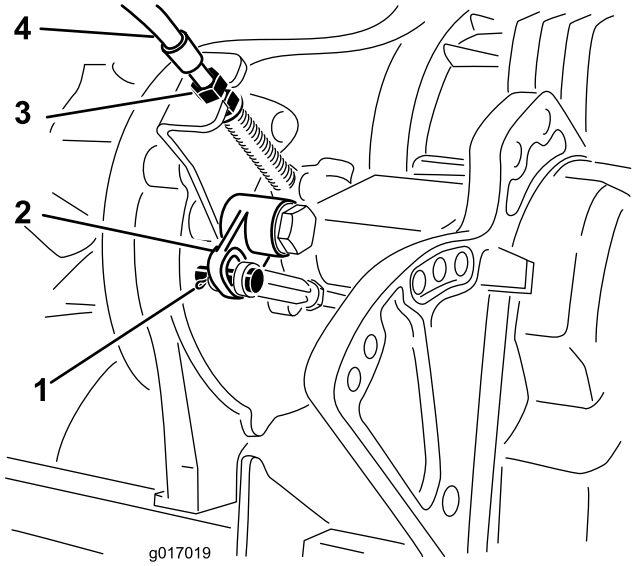

Figure 46

1. Clevis pin & cotter pin
2. Bell crank
3. Jam nuts
4. Traction control cable

5. Rotate the bell crank rod 1–1/2 turns to increase the rod length .06 inches (1.5 mm).
6. Reconnect the clevis to bell crank lever with the clevis pin and cotter pin previously removed.
7. At the transmission bulk head (Figure 46), adjust the cable jam nuts to decrease the distance to the bell crank to accommodate the previous change.
8. Adjusting the cable at the control panel bulk head, adjust the cable jam nuts to remove any slack in the cable without extending the spring (Figure 45).
9. Check the control operation and readjust, if required.

Adjusting the Reel Control

If reel control does not properly engage, an adjustment is required.

1. Make sure the reel control is disengaged.
2. At the transmission bulkhead, adjust the reel control cable (Figure 47), to attain a spring length of 2.78-2.85 inches (70.6-72.4 mm).

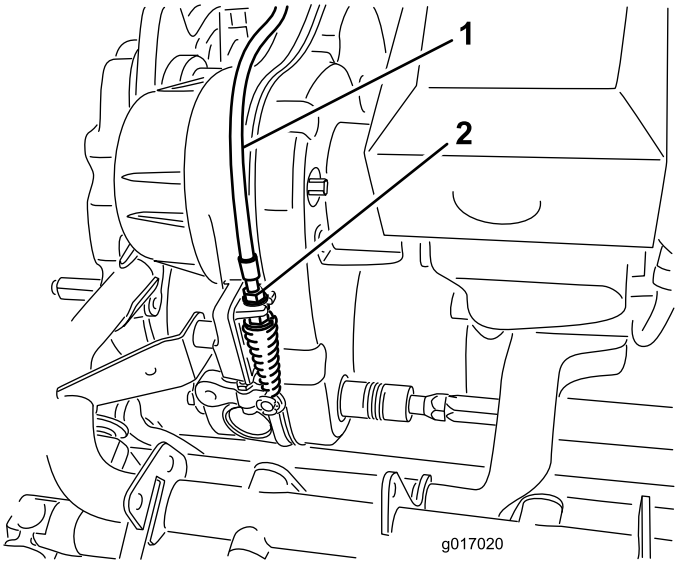

Figure 47

1. Reel control cable 2. Jam nuts

3. At the control handle bulkhead, loosen the reel control cable until there is slack in the cable (Figure 45).
4. At the control handle bulkhead, tighten the reel control cable enough to remove the slack from the cable without extending the spring.
5. Check the operation as follows:
   - Verify that the reel clutch teeth disengage when the clutch is released and the reel clutch teeth do not bottom out when engaged.

     Note: Remove the rubber plug (Figure 43) from the hole in the front of the transmission to view reel clutch.
   - The reel stopping time must be less than 7 seconds with the reel to bedknife backed off.
   - Refer to the Service Manual or contact your distributor for further assistance.

Storage

1. Remove any grass clippings, dirt, and grime from the external parts of the entire machine, especially the engine. Clean the dirt and chaff from the outside of the engine's cylinder head fins and the blower housing.

   Important: You can wash the machine with mild detergent and water. Do not pressure wash the machine. Avoid excessive use of water, especially near the shift lever plate, and the engine.
2. For long-term storage (more than 30 days) add stabilizer/conditioner additive to the fuel in the tank.
   A. Run the engine to distribute conditioned fuel through the fuel system (5 minutes).
   B. Either stop the engine, allow it to cool, and drain the fuel tank, or operate the engine until it stops.
   C. Restart the engine and run it until it stops. Repeat, on Choke, until the engine will not restart.
   D. Dispose of fuel properly. Recycle as per local codes.

      Note: Do not store stabilizer/conditioned gasoline over 90 days.
3. Check and tighten all bolts, nuts, and screws. Repair or replace any part that is damaged or defective.
4. Paint all scratched or bare metal surfaces. Paint is available from your Authorized Service Distributor.
5. Store the machine in a clean, dry garage or storage area. Cover the machine to protect it and keep it clean.

Notes:

Notes:

The Toro Total Coverage Guarantee

A Limited Warranty

Conditions and Products Covered

The Toro Company and its affiliate, Toro Warranty Company, pursuant to an agreement between them, jointly warrant your Toro Commercial product (“Product”) to be free from defects in materials or workmanship for two years or 1500 operational hours*, whichever occurs first. This warranty is applicable to all products with the exception of Aerators (refer to separate warranty statements for these products). Where a warrantable condition exists, we will repair the Product at no cost to you including diagnostics, labor, parts, and transportation. This warranty begins on the date the Product is delivered to the original retail purchaser.
* Product equipped with an hour meter.

Instructions for Obtaining Warranty Service

You are responsible for notifying the Commercial Products Distributor or Authorized Commercial Products Dealer from whom you purchased the Product as soon as you believe a warrantable condition exists. If you need help locating a Commercial Products Distributor or Authorized Dealer, or if you have questions regarding your warranty rights or responsibilities, you may contact us at:

Toro Commercial Products Service Department
Toro Warranty Company
8111 Lyndale Avenue South
Bloomington, MN 55420-1196

952–888–8801 or 800–952–2740
E-mail: commercial.warranty@toro.com

Owner Responsibilities

As the Product owner, you are responsible for required maintenance and adjustments stated in your *Operator's Manual*. Failure to perform required maintenance and adjustments can be grounds for disallowing a warranty claim.

Items and Conditions Not Covered

Not all product failures or malfunctions that occur during the warranty period are defects in materials or workmanship. This warranty does not cover the following:

- Product failures which result from the use of non-Toro replacement parts, or from installation and use of add-on, or modified non-Toro branded accessories and products. A separate warranty may be provided by the manufacturer of these items.
- Product failures which result from failure to perform recommended maintenance and/or adjustments. Failure to properly maintain your Toro product per the Recommended Maintenance listed in the *Operator’s Manual* can result in claims for warranty being denied.
- Product failures which result from operating the Product in an abusive, negligent, or reckless manner.
- Parts subject to consumption through use unless found to be defective. Examples of parts which are consumed, or used up, during normal Product operation include, but are not limited to, brake pads and linings, clutch linings, blades, reels, rollers and bearings (sealed or greasable), bed knives, spark plugs, castor wheels and bearings, tires, filters, belts, and certain sprayer components such as diaphragms, nozzles, and check valves, etc.
- Failures caused by outside influence. Conditions considered to be outside influence include, but are not limited to, weather, storage practices, contamination, use of unapproved fuels, coolants, lubricants, additives, fertilizers, water, or chemicals, etc.
- Failure or performance issues due to the use of fuels (e.g. gasoline, diesel, or biodiesel) that do not conform to their respective industry standards.
- Normal noise, vibration, wear and tear, and deterioration.
- Normal “wear and tear” includes, but is not limited to, damage to seats due to wear or abrasion, worn painted surfaces, scratched decals or windows, etc.

Parts

Parts scheduled for replacement as required maintenance are warranted for the period of time up to the scheduled replacement time for that part. Parts replaced under this warranty are covered for the duration of the original product warranty and become the property of Toro. Toro will make the final decision whether to repair any existing part or assembly or replace it. Toro may use remanufactured parts for warranty repairs.

Deep Cycle and Lithium-Ion Battery Warranty:

Deep cycle and Lithium-Ion batteries have a specified total number of kilowatt-hours they can deliver during their lifetime. Operating, recharging, and maintenance techniques can extend or reduce total battery life. As the batteries in this product are consumed, the amount of useful work between charging intervals will slowly decrease until the battery is completely worn out. Replacement of worn out batteries, due to normal consumption, is the responsibility of the product owner. Battery replacement may be required during the normal product warranty period at owner’s expense. Note: (Lithium-Ion battery only): A Lithium-Ion battery has a part only prorated warranty beginning year 3 through year 5 based on the time in service and kilowatt hours used. Refer to the *Operator's Manual* for additional information.

Maintenance is at Owner’s Expense

Engine tune-up, lubrication, cleaning and polishing, replacement of filters, coolant, and completing recommended maintenance are some of the normal services Toro products require that are at the owner’s expense.

General Conditions

Repair by an Authorized Toro Distributor or Dealer is your sole remedy under this warranty.

Neither The Toro Company nor Toro Warranty Company is liable for indirect, incidental or consequential damages in connection with the use of the Toro Products covered by this warranty, including any cost or expense of providing substitute equipment or service during reasonable periods of malfunction or non-use pending completion of repairs under this warranty. Except for the Emissions warranty referenced below, if applicable, there is no other express warranty. All implied warranties of merchantability and fitness for use are limited to the duration of this express warranty.

Some states do not allow exclusions of incidental or consequential damages, or limitations on how long an implied warranty lasts, so the above exclusions and limitations may not apply to you. This warranty gives you specific legal rights, and you may also have other rights which vary from state to state.

Note regarding engine warranty:

The Emissions Control System on your Product may be covered by a separate warranty meeting requirements established by the U.S. Environmental Protection Agency (EPA) and/or the California Air Resources Board (CARB). The hour limitations set forth above do not apply to the Emissions Control System Warranty. Refer to the Engine Emission Control Warranty Statement supplied with your product or contained in the engine manufacturer’s documentation for details

Countries Other than the United States or Canada

Customers who have purchased Toro products exported from the United States or Canada should contact their Toro Distributor (Dealer) to obtain guarantee policies for your country, province, or state. If for any reason you are dissatisfied with your Distributor's service or have difficulty obtaining guarantee information, contact the Toro importer.