FORM NO. 3320-736

TORO®

MODEL NO. 20921B – 2000001 & UP
MODEL NO. 20926B – 2000001 & UP

OPERATOR'S MANUAL

48 CM SP REAR BAGGER MOWER

ENGLISH

⚠ SAFETY INSTRUCTIONS

Improper use or maintenance of this mower by the operator or owner can result in injury. To reduce the potential for injury, comply with these safety instructions and always pay attention to the safety alert symbol ⚠. Failure to comply with these instructions may result in personal injury.

WARNING: Engine exhaust contains carbon monoxide which is an odorless, deadly poison. Carbon monoxide is also known to the State of California to cause birth defects. Do not run engine indoors or in an enclosed area.

BEFORE OPERATING

1. Read this manual carefully before operating the mower. Become familiar with the controls and proper use of the mower. Never allow children to operate the mower or adults to operate it without proper instructions.

2. Keep everyone, especially children and pets, away from area of operation. Thoroughly inspect area where mower will be used and remove sticks, stones, wire, and debris that could be picked up and thrown by mower.

3. Wear long pants and substantial shoes. Do not operate mower while wearing open sandals, jewelry, loose clothing or when barefoot.

4. Check fuel level before starting engine. Do not fill fuel tank indoors, when the engine is running, or until engine cools for several minutes after running. Wipe up spilled gasoline before starting engine.

5. Keep all guards, shields, and safety devices in place. Repair or replace defective or damaged parts.

6. Traction drive is designed to stop when control bar is released. Assure control functions properly before each use of mower.

7. Because fuel is highly flammable, handle it carefully.

- **A.** Use an approved container.
- **B.** Fill fuel tank outdoors, not indoors. **NEVER ADD FUEL TO AN ENGINE THAT IS RUNNING OR HOT.**
- **C.** Install gas cap on fuel container and gas tank, and wipe up any spilled gasoline before starting engine.

WHILE OPERATING

8. Do not run engine indoors.

9. Always maintain secure footing. Keep a firm grip on the handle and walk; never run. Never operate mower in wet grass. Mow only in daylight or in good artificial light.

10. Mow across the face of slopes; never up and down. Use extreme caution when changing direction on slopes. Do not mow excessively steep slopes.

11. Always wear safety glasses or eye shields during operation to protect eyes from foreign objects that may be thrown from the machine.

12. Keep face, hands, and feet away from the mower housing and cutter blade when the engine is running.

13. Stay behind the handle until the engine stops and keep clear of discharge opening at all times.

14. When bagging grass, stop engine before the bag is removed and emptied.

15. Shut engine off and wait for all moving parts to stop before unclogging chute.

16. Since the blade rotates for a few seconds after the engine is shut off, stay behind the handle until all moving parts stop.

17. After striking a foreign object or if mower vibrates abnormally, stop engine and remove wire from spark plug. Check mower for damage and make all repairs before using mower again.

18. Stop the engine before adjusting the height-of-cut.

19. Stop the engine when crossing a gravel driveway, road, or sidewalk.

20. Stop engine before leaving the operator's position—behind the handle. Disconnect wire from spark plug if mower will be unattended.

21. Do not touch engine while it is running or shortly after it is stopped because engine will be hot enough to cause a burn.

MAINTENANCE

22. Perform only those maintenance instructions described in this manual. If major repairs are ever needed or if assistance is desired, contact your local Authorized TORO Service Dealer.

23. Before mower is cleaned, inspected, serviced, or adjusted, stop engine and disconnect wire from spark plug. Keep wire away from plug to prevent accidental starting.

24. To assure the mower is in safe operating condition, frequently check and keep all nuts, bolts, and screws tight. Ensure blade nuts are tightened to 20–35 N·m (15–25 ft–lb).

25. To reduce fire hazard, keep engine free of excessive grease, grass, leaves, and accumulations of dirt.

©The Toro Company–1991

SAFETY INSTRUCTIONS

26. Do not overspeed the engine by changing governor settings.
27. Check grass catcher bag frequently for wear or deterioration. Replace with a new bag when worn or damaged for your protection.
28. Allow engine to cool before storing mower in any enclosure. Do not store mower near any open flame or where gasoline fumes may be ignited by a spark.
29. At the time of manufacture, the mower conformed to the safety standards in effect for rotary mowers. To assure optimum performance and continued safety certification of the mower, use genuine TORO replacement parts and accessories. Replacement parts and accessories made by other manufacturers may result in non-conformance with the safety standards, and that could be dangerous.

SAFETY SYMBOL GLOSSARY


Safety alert


Keep hands and feet away from rotating blade


Read and understand operator's manual



Stop engine before leaving operator's position


Choke on


Ignition off


Fast


Slow


Keep all guards in place



Keep bystanders from area being mowed

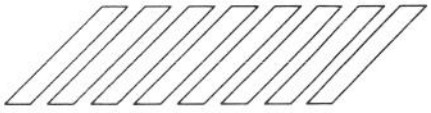
Place foot here when starting



Never open discharge door on mower when engine is running, unless grass bag is installed


Traction drive – ENGAGED


Traction drive – DISENGAGED

TABLE OF CONTENTS

	Page
Set-Up Instructions	3
Before Operating	4
Operating Instructions	5
Maintenance	7
Servicing Air Cleaner	7
Replacing Spark Plug	8
Draining Gasoline	8
Changing Crankcase Oil	8
Adjusting Throttle	9
Adjusting Traction Wheel Drive	9
Inspecting/Removing/Sharpening Blade	10
Lubrication	10
Checking Transmission Oil Level	11
Charging Battery	11
Cleaning Mower Housing	12
Preparing Mower For Storage	12
Product Identification	12
Toro Service Support	12

SET-UP INSTRUCTIONS

INSTALL HANDLE

1. INSTALLING HANDLE—Loosen knobs on mounting brackets (Fig. 1).

2. Position mounting brackets in a vertical position so that holes face up.

3. Slide handle ends into holes in mounting brackets until handle ends are completely seated in brackets (Fig. 1). Make sure throttle cable, electric start cable (Key-lectric model) and traction cable rest on top of left mounting bracket (Fig. 2).

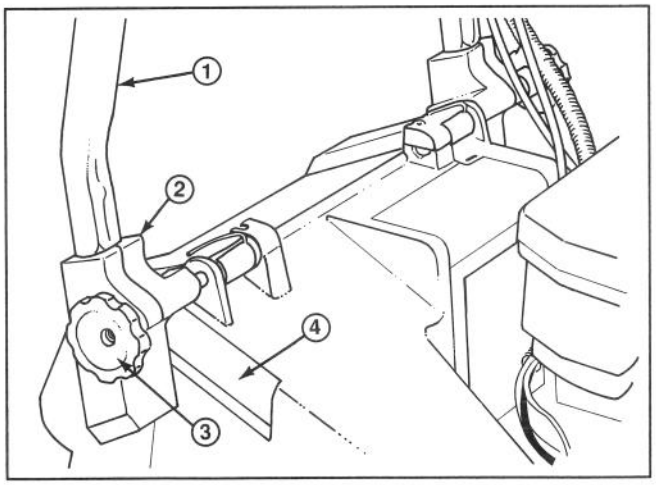

Figure 1

1. Handle
2. Mounting bracket
3. Knobs
4. Housing pocket

4. Rotate handle and brackets rearward until brackets fit securely into housing pockets (Fig. 2).

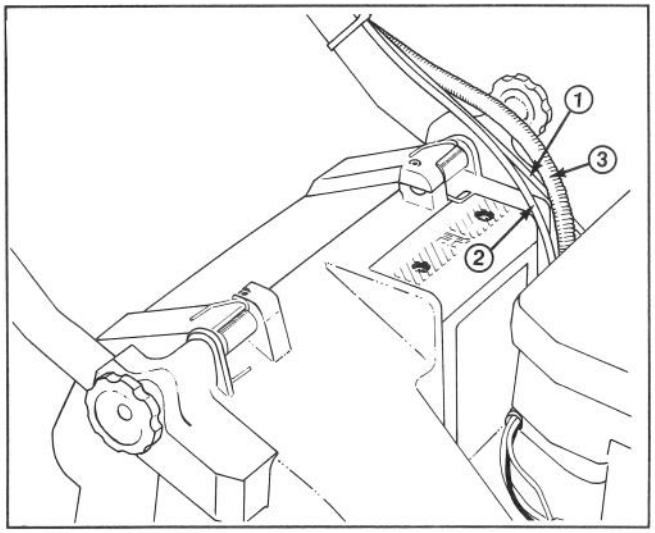

Figure 2

1. Throttle cable
2. Traction cable
* 3. Electric start cable

* Electric start model

5. Tighten knobs until edges of slots on top of mounting brackets touch.

6. Use cable tie to secure cable(s) to lower side of left hand tube (Fig. 3). Cable tie should be positioned 25 mm (1") from bend in handle. See Figure 3 for correct cable placement.

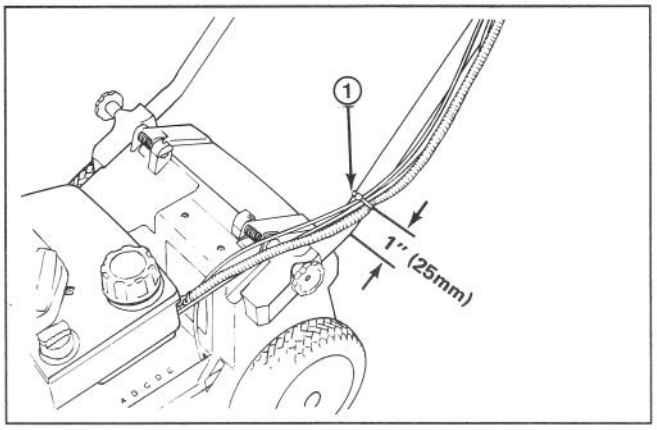

Figure 3

1. Cable tie

Note: Make sure cable(s) do not interfere with the raising or lowering of discharge door.

7. Cut excess length from end of cable tie on lower left handle.

INSTALL GRASS BAG

1. Raise discharge door, slide bag ramp attached to bag into discharge opening, and hook bag frame onto rounded portion of mounting brackets (Fig. 4).

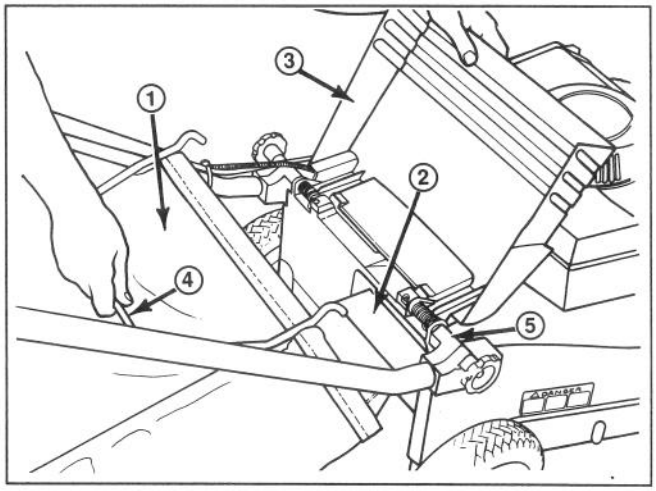

Figure 4

1. Bag
2. Bag ramp
3. Discharge door
4. Bag handle
5. Mounting bracket

2. Allow discharge door to rest on top of bag (Fig. 5).

SET-UP INSTRUCTIONS

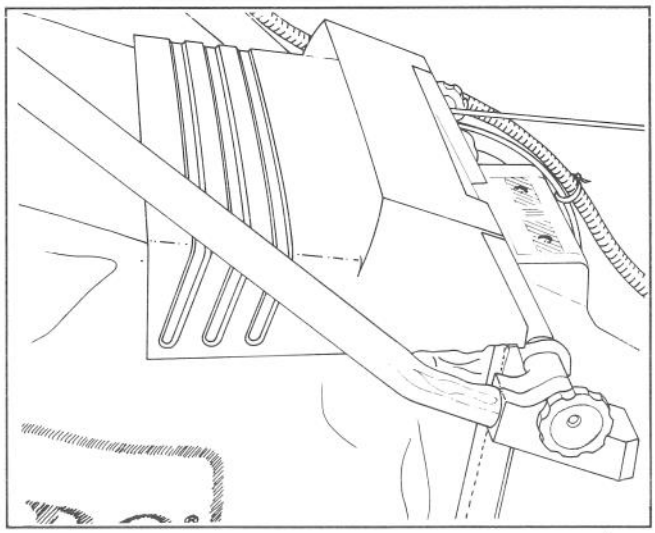

Figure 5

INSTALL BATTERY (electric start model)

1. Refer to Charging Battery, page 11. Slide battery, decal side facing operator's position, between mounting tabs on back of control panel (Fig. 6).
2. Connect wires.

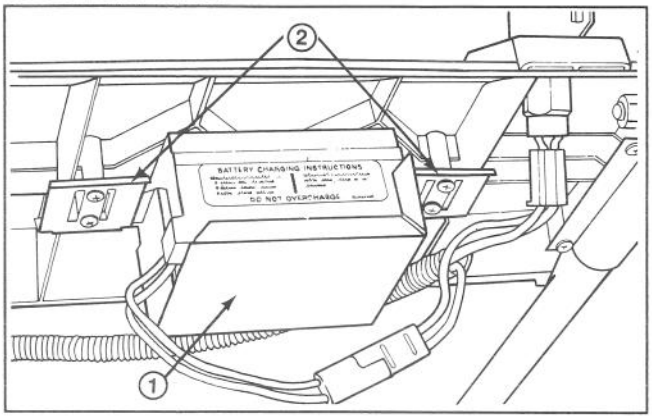

Figure 6

1. Battery
2. Mounting tabs

BEFORE OPERATING

FILL CRANKCASE WITH OIL

Initially, crankcase must be filled with 0.5 L (18 ounces) of SAE 10W-30 oil. Use any high quality detergent oil having the American Petroleum Institute (API) "service classification"—MS, SC, SD, SE, or SF.

Before each use, assure oil level is between ADD and FULL marks (Fig. 7). Add oil if level is low.

1. Position mower on level surface and clean around oil dipstick.
2. Remove dipstick by rotating cap counterclockwise 1/4 turn.

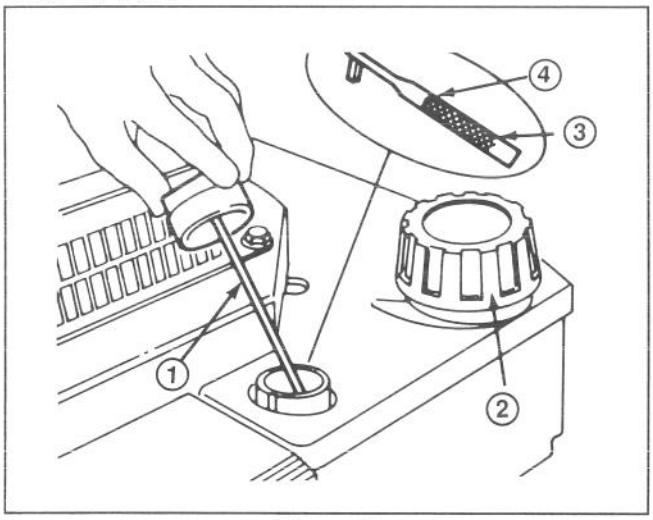

Figure 7

1. Dipstick
2. Fuel tank cap
3. ADD mark
4. FULL mark

3. Wipe dipstick and insert it into filler neck. Rotate cap 1/4 turn. Then remove dipstick and check level of oil (Fig. 7). If level is low, add only enough oil to raise level to FULL mark on dipstick. **DO NOT FILL ABOVE FULL MARK BECAUSE ENGINE COULD BE DAMAGED WHEN STARTED. POUR OIL SLOWLY.**

Note: Check oil level each time mower is used or after every 5 hours of mower operation. Initially, change oil after the first 2 hours of operation; thereafter, change oil after every 25 hours of operation. More frequent oil changes are required in dusty or dirty conditions.

4. Insert dipstick into filler neck and rotate cap clockwise 1/4 turn to lock it in place.

FILL FUEL TANK WITH GASOLINE

WARNING

DANGER: Gasoline is extremely flammable and explosive under certain conditions. DO NOT SMOKE when handling fuel and keep fuel far away from open flames and sparks. Never buy more than a 30 day supply of gasoline. Store it in an approved container. Keep gasoline out of reach of children.

Refuel outdoors and only when engine is cold. Do not fill tank full. Fill tank to within 6 to 13 mm (1/4" to 1/2") from top of tank, not into filler neck. This space is for expansion of fuel. Use funnel or spout to prevent spilling. Wipe up any spilled gas.

Note: The Toro Company strongly recommends the use of fresh, clean, **UNLEADED** regular grade gasoline in Toro gasoline powered products. Unleaded gasoline burns cleaner, extends engine life, and promotes good starting by reducing the build-up of combustion chamber deposits. Leaded gasoline can be used if unleaded is not available.

BEFORE OPERATING

1. Clean around fuel tank cap and remove cap from tank (Fig. 7). Do not fill tank full. Using unleaded gasoline, fill fuel tank to within 6 to 13 mm (1/4 to 1/2 inch) from top of tank, not into the filler neck.
2. Install fuel tank cap and wipe up any spilled gasoline.

Toro also recommends that Toro Stabilizer/Conditioner be used regularly in all Toro gasoline powered products during operation and storage seasons. Toro Stabilizer/Conditioner cleans the engine during operation and prevents gum-like varnish deposits from forming in the engine during periods of storage.

IMPORTANT: Do not mix oil with the gasoline. Never use methanol, gasoline containing methanol, gasohol containing more than 10% ethanol, premium gasoline or white gas because engine fuel system damage could result.

Do not use fuel additives other than those manufactured for fuel stabilization during storage such as Toro's Stabilizer/Conditioner or a similar product. Toro's Stabilizer/Conditioner is a petroleum distillate based conditioner/stabilizer. Toro does not recommend stabilizers with an alcohol base such as ethanol, methanol or isopropyl. Additives should not be used to try to enhance the power or performance of machine.

OPERATING INSTRUCTIONS

OPERATING TIPS

1. CHECK OIL LEVEL—Maintain oil level between ADD and FULL range as shown on dipstick (Fig. 7).
2. CUTTING AND BAGGING—Best results are achieved when only about 1/3 of the grass blade is cut. If long grass must be cut, use highest height-of-cut setting for first mowing. Then recut the grass at a more normal setting. If too long of grass is cut, mower may plug and cause engine to stall.

When cutting in dry, dusty conditions move the throttle to a slower speed to reduce the amount of dust generated by mower.

3. SHARP BLADE—Begin each cutting season with a sharp blade. Periodically file down nicks.

STARTING, STOPPING, AND SELF-PROPELLING

CONTROLS—Key switch (electric start model), throttle, and self-propel control bar are on upper handle (Fig. 8). Recoil starter is on top of engine (Fig. 9).

1. Push spark plug wire onto spark plug (Fig. 9).

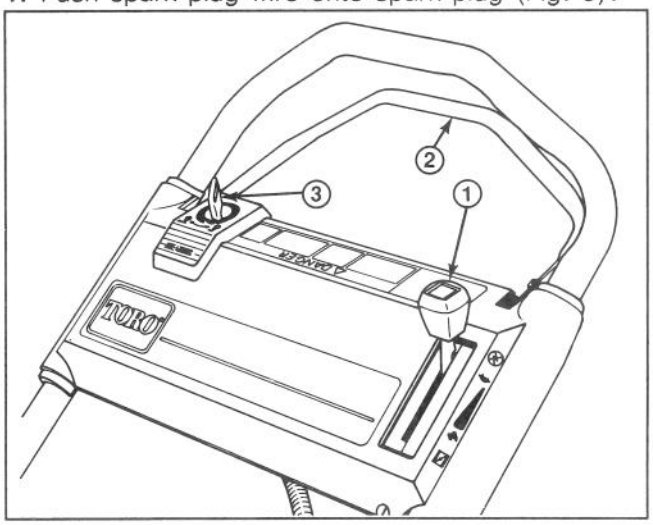

Figure 8

1. Throttle
2. Self-propel control bar
* 3. Key switch

* electric start model

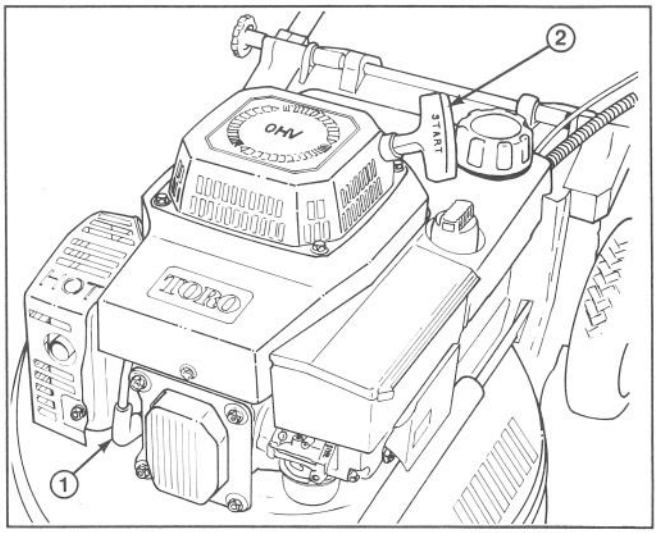

Figure 9

1. Spark plug wire
2. Recoil starter

2. KEY-LECTRIC STARTING (electric start model)—Move throttle forward to CHOKE position (Fig. 10). Turn key (Fig. 8) to START and release when engine begins running. Move throttle rearward to FAST position or regulate engine speed as desired. If the battery's charge is too weak to start the engine, use the recoil starter (Fig. 9).
3. MANUAL STARTING—Move throttle forward to CHOKE position (Fig. 10). Pull engine mounted recoil starter (Fig. 9) out until slack in rope is taken up. Then pull vigorously to start the engine. When engine starts, move throttle to FAST position or regulate engine speed as desired.
4. STOPPING (Fig. 10)—To stop engine, move throttle rearwards to ENGINE OFF position. Remove key from switch and pull wire off spark plug if mower will be unattended or not used.
5. WHEEL TRACTION OPERATION (Fig. 11)—To self-propel the mower, squeeze the control bar against the handle. To stop the self-propel drive, release the control bar.

OPERATING INSTRUCTIONS

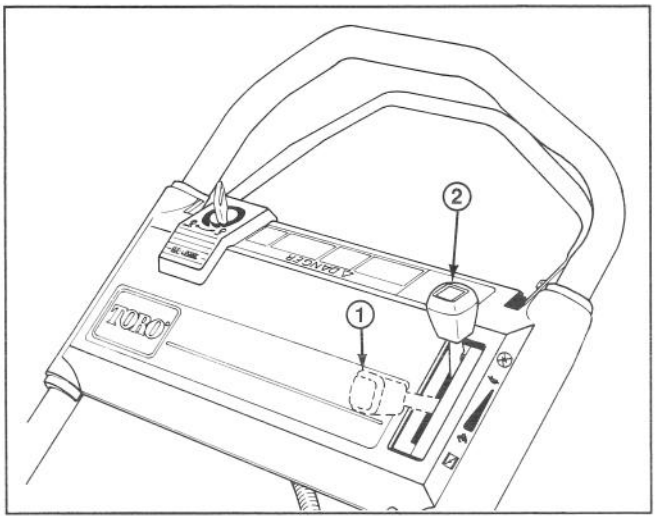

Figure 10

1. Choke on
2. Engine off

Note: The drive wheels are equipped with free-wheeling clutches which enable the mower to be pulled rearward easier when the wheel drive is disengaged. To disengage the clutches, mower must be pushed forward at least 2.5 cm (1") after wheel drive operation has stopped.

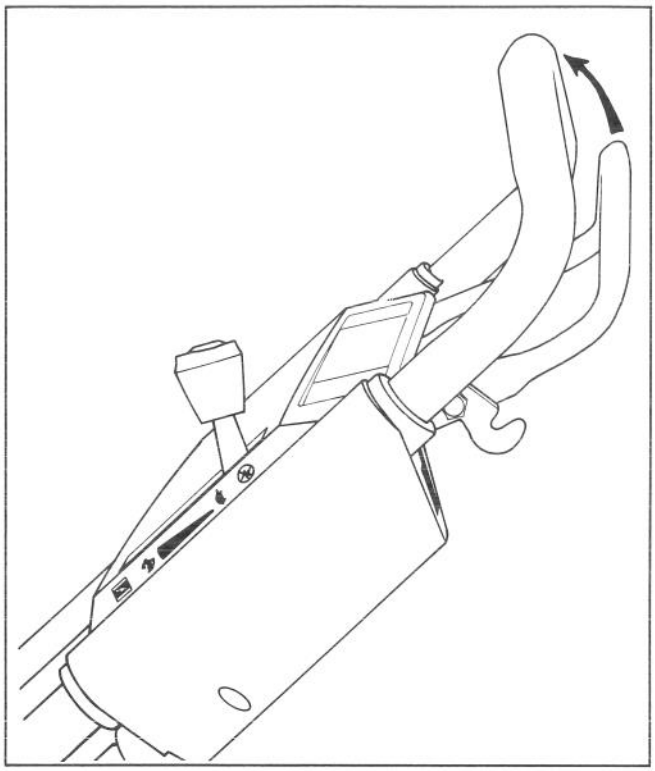

Figure 11

USING GRASS BAG

1. Stop engine and wait for all parts to stop.

2. INSTALLING BAG—Raise discharge door, slide bag ramp attached to bag into discharge opening, and hook bag frame onto mounting bracket (Fig. 12). Allow discharge door to rest on top of bag (Fig. 13).

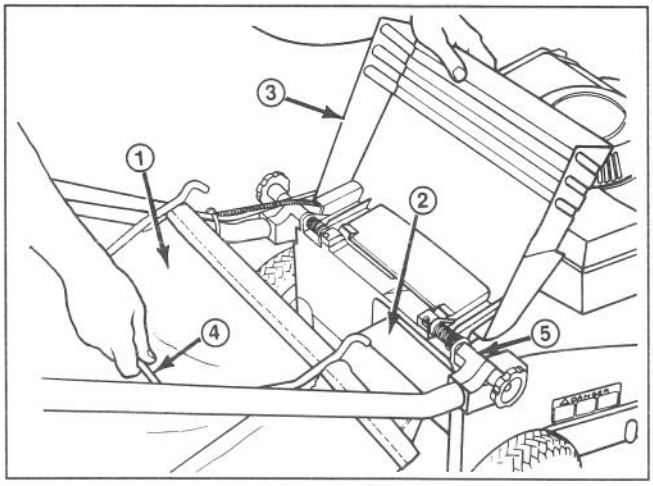

Figure 12

1. Bag
2. Bag ramp
3. Discharge door
4. Bag handle
5. Mounting bracket

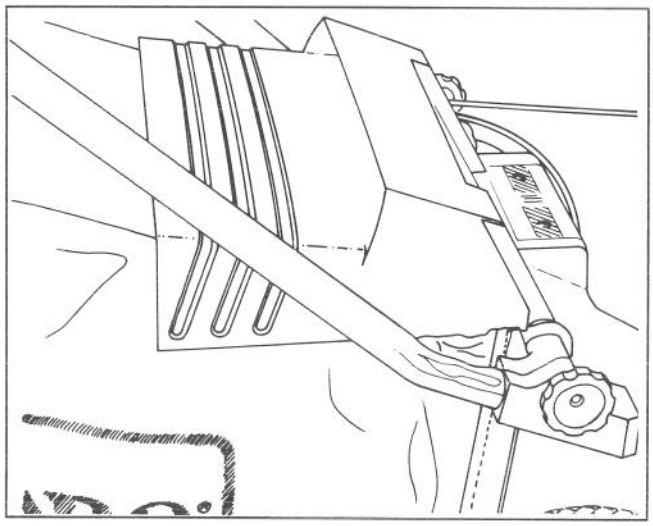

Figure 13

3. REMOVING BAG—**Stop engine and wait for all moving parts to stop.** For protection, always keep hands and feet away from mower housing while engine is running. Raise discharge door. While holding discharge door up, grasp handle on grass bag and lift bag off mower. Allow discharge door to close.

Note: When removing the grass bag, the bag ramp scoops out any clippings that may be plugging the discharge opening. If the discharge opening remains plugged, clear all clippings from the mower.

4. Grasp bag frame handle. Lift plastic bar off pins and slip rear of grass bag off bag frame until plastic bar touches underside of grass bag (Fig. 14). Lift up grass bag flap covering rear of bag. Gradually raise front of bag while shaking bag to empty.

OPERATING INSTRUCTIONS

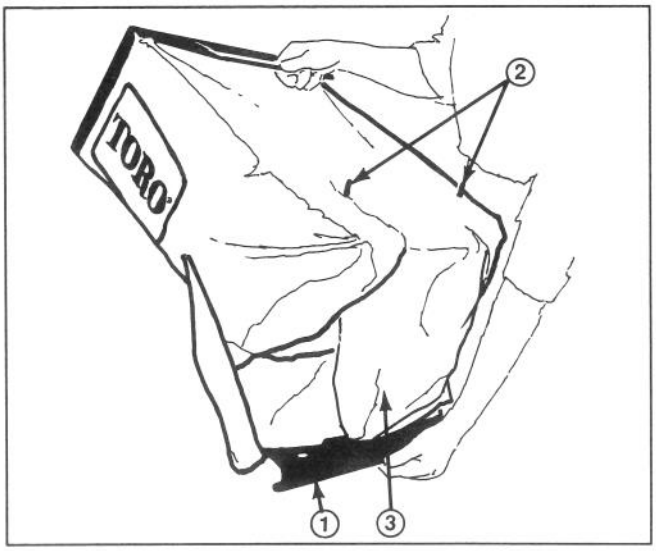

Figure 14

1. Plastic bar 2. Frame pins 3. Grass bag flap

WARNING

Never open discharge door on mower or remove grass bag when engine is running because grass clippings and other debris discharge with enough force to cause injury.

The grass bag material will catch and contain the majority of foreign objects such as small stones and other similar debris. The bag material, however, is subject to normal wear and deterioration. So check the bag frequently, and if it is defective, install a new genuine TORO replacement bag that has this or a similar warning.

ADJUSTING HEIGHT-OF-CUT

Five letters on the belt cover represent the height-of-cut settings. All wheels automatically adjust to the same height-of-cut setting.

1. Stop the engine and pull wire off spark plug. For electric start model, remove key from switch.

2. Use one or two fingers to squeeze the height-of-cut adjustment lever (Fig. 15).

To raise the wheel height, squeeze the lever to unlock the height-of-cut adjustment lever and pull up on the mower. Release lever when desired height is found. To lower the height, squeeze the height-of-cut adjustment lever to release the lever and push down on the mower **while rolling the mower forward**. Use the pointer on the link rod to locate the correct setting.

3. Make sure the height adjustment lever is locked into a height setting before beginning operation. The height should not change when the height-of-cut is locked.

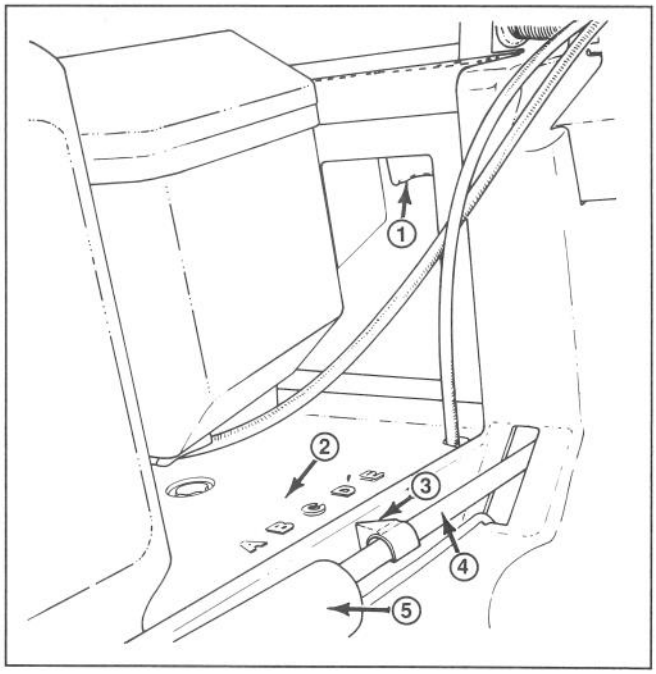

Figure 15

1. Height-of-cut adjustment lever
2. Height settings
3. Pointer
4. Link rod
5. Spring cover

MAINTENANCE

CAUTION

Pull wire off spark plug before performing adjustments or maintenance.

SERVICING AIR CLEANER

Normally, clean air cleaner after every 25 operating hours. More frequent cleaning is required when mower is operated in dusty or dirty conditions.

1. Stop engine and pull wire off spark plug. For electric start model, remove key from switch.

2. Push in locking tabs and lift off air cleaner cover (Fig. 16). Clean cover thoroughly.

3. If top of foam element is dirty, remove it from air cleaner body (Fig. 16). Clean thoroughly.

A. WASH foam element in a solution of liquid soap and warm water. Squeeze to remove dirt, but do not twist because foam may tear. Rinse thoroughly in clear water.

B. DRY by wrapping in a clean rag. Squeeze rag and foam element to dry.

C. SATURATE element with 25 ml (5 teaspoons) of SAE 30 engine oil. Squeeze element to remove excess oil and to distribute oil thoroughly. A damp element is desirable.

MAINTENANCE

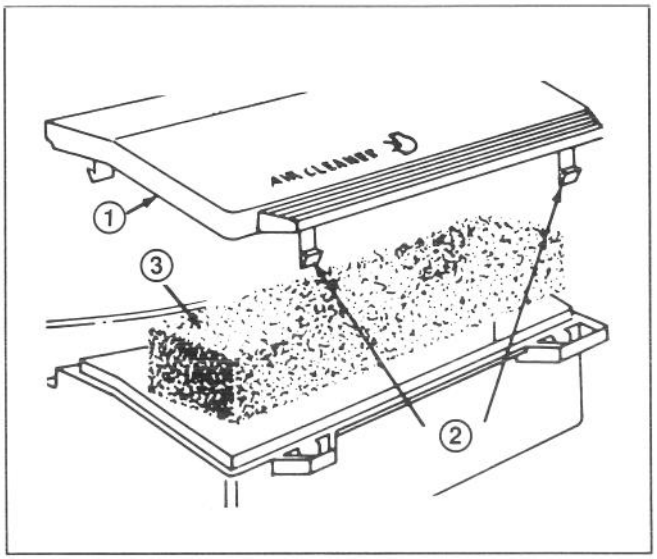

Figure 16

1. Cover 2. Locking tabs 3. Foam element

4. Reinstall foam element and air cleaner cover.

IMPORTANT: Do not operate engine without air cleaner element otherwise extreme engine wear and damage will likely result.

REPLACING SPARK PLUG

Use a NGK BPR6ES spark plug or equivalent. Correct air gap is 0.8 mm (0.032"). Remove plug after every 25 operating hours and check its condition.

1. Stop engine and wait for it to cool. Pull wire off spark plug (Fig. 17).

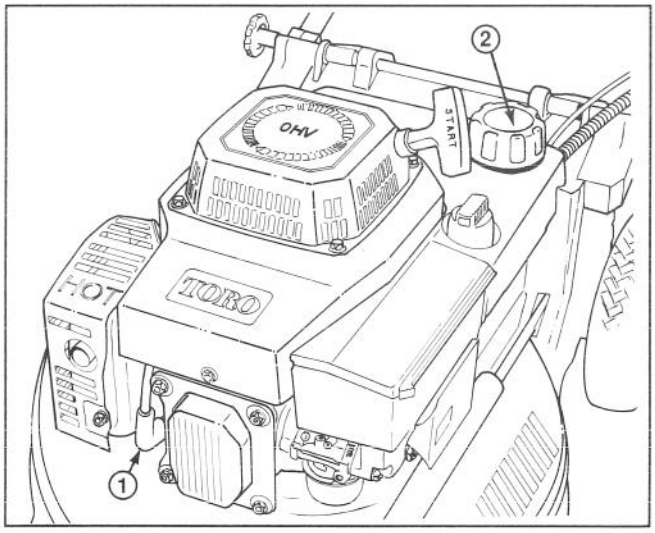

Figure 17

1. Spark plug wire 2. Fuel tank cap

2. Clean around spark plug and remove plug from cylinder head.

IMPORTANT: Replace a cracked, fouled, or dirty spark plug. Do not sand blast, scrape, or clean electrodes because engine damage could result from grit entering cylinder.

3. Set air gap at 0.8 mm (0.032") (Fig. 18). Install correctly gapped spark plug and gasket seal. Tighten plug firmly to 20 N·m (15 ft-lb).

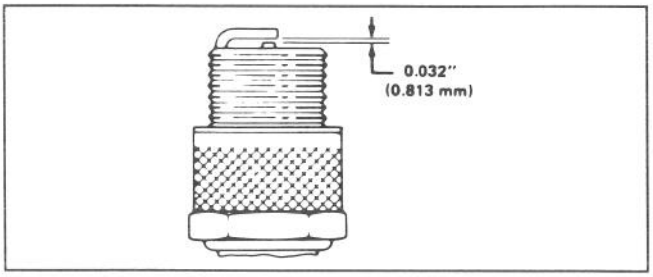

Figure 18

DRAINING GASOLINE

1. Stop engine and wait for engine to cool. Pull wire off spark plug (Fig. 17). For electric start model, remove key from switch.

Note: Drain gasoline from a cold engine only.

2. Remove cap from fuel tank (Fig. 17) and use pump-type syphon to drain fuel into clean gas can.

Note: This is the only procedure recommended for draining fuel.

CHANGING CRANKCASE OIL

Change oil after the first 2 operating hours and after every 25 hours thereafter. Since warm oil drains better and carries more contaminants than cold, run engine for several minutes or so before draining oil.

1. Stop engine and pull wire off spark plug (Fig. 17). For electric start model, remove key from switch.

2. Lift discharge door and remove grass bag. Drain gasoline from fuel tank: refer to Draining Gasoline, page 8.

3. Raise left side of mower at least 12 inches. Remove drain plug using a 14 mm wrench. Place a drain pan at left side of mower.

4. Insert oil drain tube over drain opening (Fig. 19). Lower mower allowing oil to drain into pan. Raise right side of mower until all oil has flowed into drain pan.

5. After draining, clean drain plug and reinstall it. Wipe up any spilled oil. Fill engine with fresh oil: refer to Fill Crankcase With Oil, page 4.

MAINTENANCE

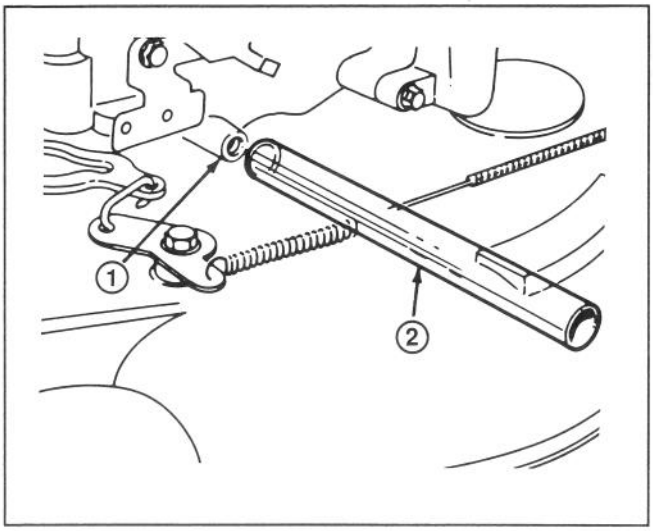

Figure 19

1. Drain opening
2. Oil drain tube

ADJUSTING THROTTLE

Throttle control adjustment may be required if engine does not start or stop. Whenever a new throttle control cable is installed, the throttle must be adjusted.

1. Stop engine and pull wire off spark plug (Fig. 17). For electric start model, remove key from switch.

2. Move throttle control to FAST position.

3. Loosen cable clamp screw until throttle cable slides (Fig. 20). Align holes in throttle lever and throttle bracket. Tighten cable clamp screw to lock adjustment in place.

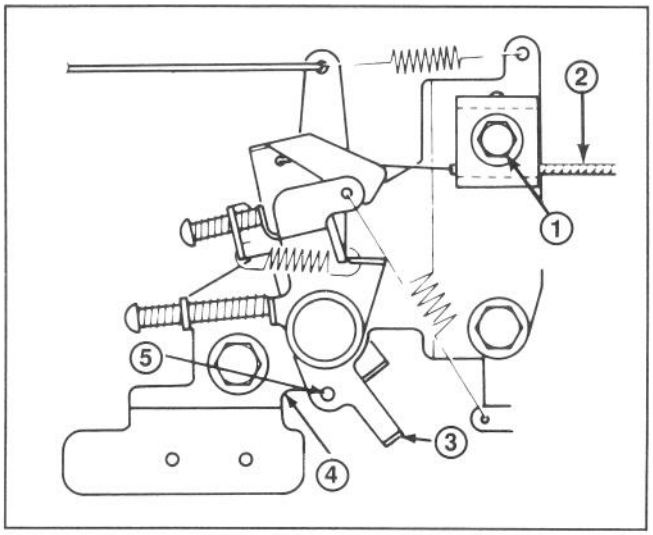

Figure 20

1. Cable clamp screw
2. Throttle cable
3. Throttle lever
4. Throttle bracket
5. Aligned holes

ADJUSTING WHEEL TRACTION DRIVE

If mower does not self-propel or has a tendency to creep forward when drive is not engaged, an adjustment to the wheel traction control cable is necessary.

1. Stop the engine.

2. Rotate adjustment knob (Fig. 21) 1/2 turn clockwise to tighten drive belt, or 1/2 turn counterclockwise to loosen belt. Hold control cable while rotating to prevent cable from turning.

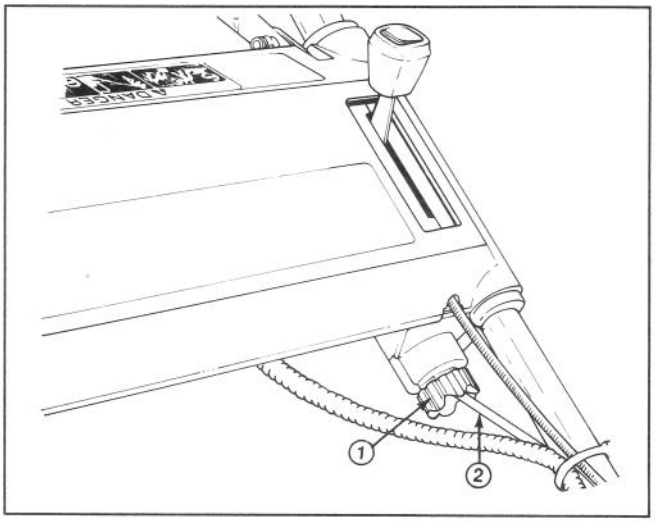

Figure 21

1. Adjustment knob
2. Control cable

3. To check traction adjustment, slowly squeeze the control bar toward the handle. The traction is adjusted correctly when resistance is felt when the control bar is approximately 25 mm (1") from upper handle (Fig. 22).

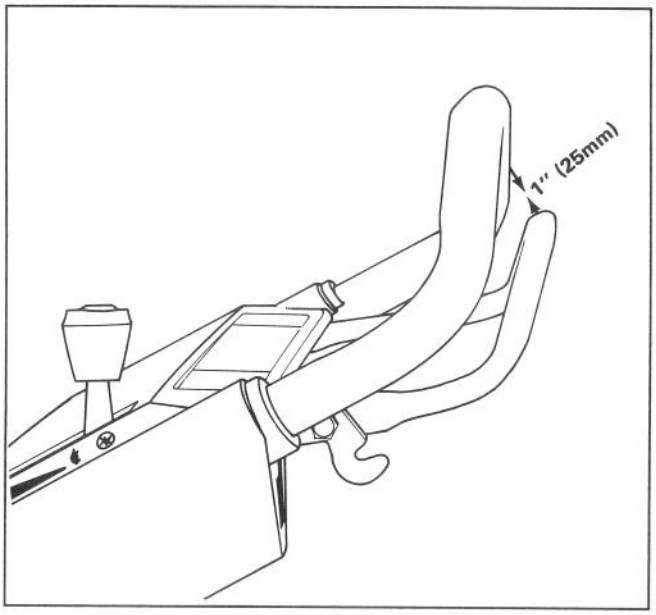

Figure 22

4. If loss of traction or improper engagement still occurs after readjustment, repeat steps 2-3 until properly adjusted.

INSPECTING/REMOVING/SHARPENING BLADE

1. Stop engine and pull wire off spark plug (Fig. 17). For electric start model, remove key from switch.
2. Drain gasoline from fuel tank; refer to Draining Gasoline, page 8.
3. Tip mower on its right side (Fig. 23). Avoid rotating blade as starting problems may result.

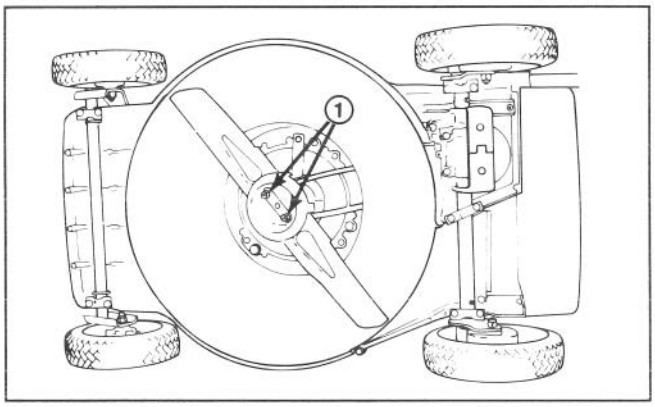

Figure 23

1. Blade nuts

4. INSPECTING BLADE—Carefully examine blade for sharpness and wear, especially where flat and curved parts meet (Fig. 24A). Since sand and abrasive material can wear away the metal that connects the flat and curved parts of the blade, check blade before using the mower. If a slot or wear is noticed, (Fig. 24B & C), replace blade with a new TORO blade. Refer to step 5.

Note: For optimum performance, install a new TORO blade before cutting season begins. During the year, file down small nicks to maintain the cutting edge.

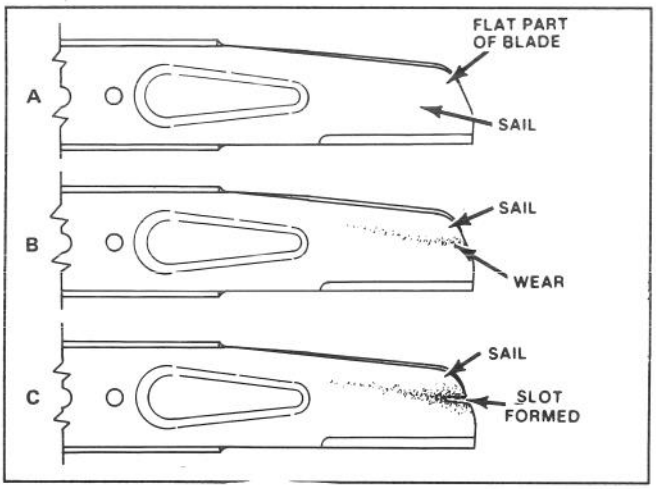

Figure 24

WARNING

If blade is allowed to wear, a slot may form near the sail. Eventually a piece of blade may break off resulting in serious injury to yourself or a bystander.

5. REMOVING BLADE—Grasp end of blade using a rag or thickly padded glove. Remove (2) blade nuts, (2) washers, anti-scalp cup, and blade (Fig. 23 & 25).

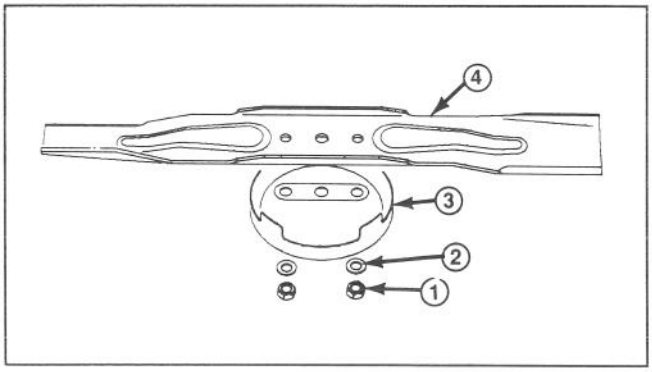

Figure 25

1. Blade nut
2. Washer
3. Anti-scalp cup
4. Blade

6. SHARPENING BLADE—Using a file, sharpen top side of blade (side facing top of mower housing) and maintain original cutting angle (Fig. 26). The blade remains balanced if the same amount of material is removed from both cutting edges.

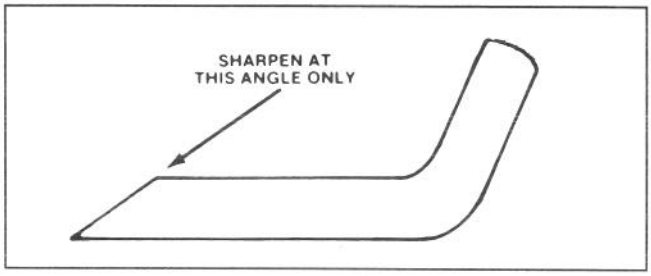

Figure 26

IMPORTANT: Check balance of blade by putting it on a blade balancer. An inexpensive balancer can be purchased at a hardware store. A balanced blade stays in a horizontal position and an unbalanced blade settles to the heavy side. If blade is not balanced, file more metal off cutting edge on heavy end of blade.

7. Install sharp, balanced TORO blade, anti-scalp cup, (2) washers, and (2) blade nuts. Sail part of blade must point toward top of mower housing to assure correct installation. Tighten blade nuts to 20-35 N·m (15-25 ft-lb).

LUBRICATION

After every 25 operating hours or when season ends, front and rear wheels must be lubricated.

1. Apply 2 or 3 drops of light oil on inside and outside of all wheel bolts. Spin wheels to distribute oil into bushings. Wipe up excess oil.

2. Tip the mower on its right side. Wipe grease fittings with clean rag (Fig. 27). Install grease gun onto fitting and gently apply two or three pumps of #2 Multi-Purpose Lithium Base Grease.

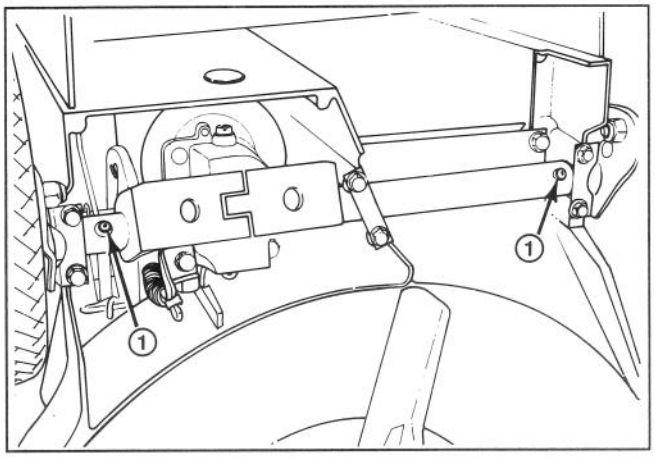

Figure 27

1. Grease fitting

CHECKING TRANSMISSION OIL LEVEL

The transmission is filled with #90 gear oil that has a GL-5 or GL-6 rating. Level of gear oil must be checked at least every 25 operating hours, before storage, and before the mowing season begins.

1. Stop engine and pull wire off spark plug (Fig. 17). For electric start model, remove key from switch.

2. Place mower on a level surface.

3. Remove plastic access hole plug from rear of mower (Fig. 28).

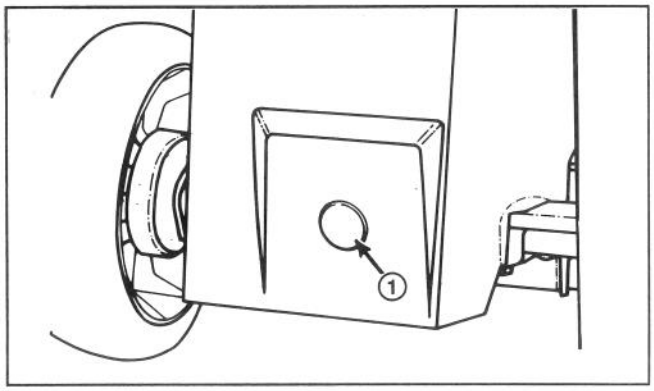

Figure 28

1. Plastic access hole plug

4. CHECKING GEAR OIL LEVEL—Reach between deck and gear case and clean around plastic gear case plug (Fig. 29). Remove gear case plug and watch for oil to drip out of hole. If gear oil drips out, quickly reinstall plug because oil is at proper level. If oil does not flow, add gear oil: see step 5.

IMPORTANT: Low oil level may indicate a leak where axle goes through both sides of transmission case. Transmission case should be inspected by an Authorized TORO Service Dealer.

5. ADDING GEAR OIL—Slowly add #90 gear oil that has a GL-5 or GL-6 rating. Stop when oil drips out of hole in gear case and quickly reinstall gear case plug with gasket. DO NOT OVERTIGHTEN OIL PLUG BECAUSE THREADS MAY STRIP.

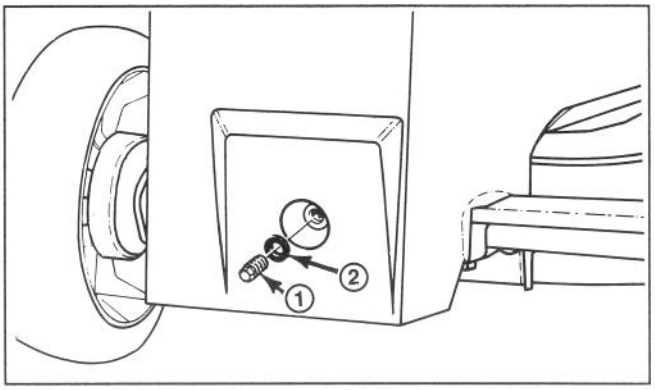

Figure 29

1. Plastic gear case plug 2. Gasket

Note: A clean oil container or any other clean container with a small tip can be used to add oil. Using a dirty oil container could contaminate the transmission case and eventually cause damage.

CHARGING BATTERY (electric start model)

Although a new battery is not fully charged, a partial charge of 4 hours provides enough energy for several starts. However, a new battery must be charged for 72 continuous hours to assure full charge. Also charge battery for 72 hours when mower is stored and in the spring. During normal operation, charge battery for 48 hours once every month or as needed.

1. Stop engine and disconnect wire harness from battery terminal (Fig. 30).

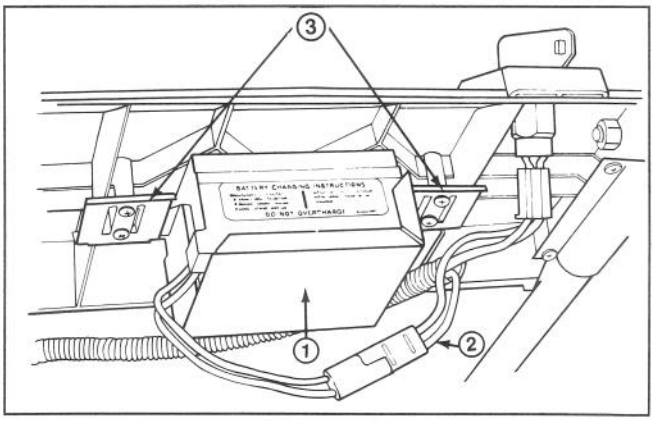

Figure 30

1. Battery 2. Wire harness 3. Mounting tabs

2. If desired, battery can be removed by sliding it out of mounting tabs. However, removal is not required if mower can be positioned near an electrical outlet.

3. Connect TORO electro charger to battery and plug into 220VAC power outlet. After charging battery for 72 hours, unplug charger and disconnect from battery.

4. Connect wiring harness to battery terminal.

IMPORTANT: Only the TORO electro charger is recommended because other chargers could damage the battery. Always use charger indoors and charge battery at room temperature (22° C or +70° F) whenever possible. Do not charge battery longer than 72 hours because damage could result.

CLEANING MOWER HOUSING

To assure best performance, keep underside of mower housing and inside of discharge area clean.

1. Drain gasoline from fuel tank: refer to Draining Gasoline, page 8.

2. Tip mower on its right side (Fig. 31). Avoid rotating blade because starting problems may result.

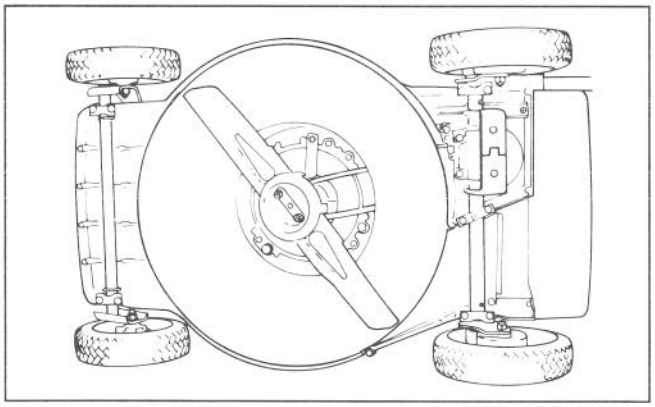

Figure 31

3. Remove dirt and grass clippings that stick to housing by spraying it with a garden hose. Scrape out remaining debris with hardwood scraper. Avoid burrs and sharp edges.

4. Clean discharge door and hinges of grass or debris that may impair operation of door.

PREPARING MOWER FOR STORAGE

1. For long term storage, it is recommended that gasoline be drained from fuel tank or use a fuel additive before storing. To drain gasoline, refer to Draining Gasoline, page 8. After fuel is drained, start engine and let it idle until all fuel is consumed and engine stops. If gasoline is not drained, gum-like varnish deposits will form and cause poor engine operation or even starting problems.

Fuel can be left in gas tank only if a fuel additive, such as Toro's Stabilizer/Conditioner, is added to gasoline and run through engine before storing. Toro's Stabilizer/Conditioner is a petroleum distillate based conditioner/stabilizer. Toro does not recommend stabilizers with an alcohol base, such as ethanol, methanol or isopropyl. Use fuel additive in recommended quantities as specified on container.

Under normal conditions, fuel additives remain effective in fuel for 6-8 months.

2. Drain oil: refer to Changing Crankcase Oil, page 8. After oil is drained, do not fill crankcase with oil until the following steps (3-10) are completed.

3. Remove spark plug and pour 30 ml (2 tablespoons) of SAE 30 or 10W-30 oil into hole in cylinder. Pull starter rope slowly to coat inside of cylinder. Install spark plug and tighten to 15 ft-lb (20 N·m). **DO NOT INSTALL WIRE ON SPARK PLUG.**

4. Clean mower housing; refer to Cleaning Mower Housing, page 12.

5. Check condition of blade; refer to Inspecting/Removing/Sharpening Blade, page 10.

6. Tighten all nuts, bolts, and screws.

7. Clean dirt, chaff, grass clippings, and grime from external parts of the engine, shrouding, and top of mower housing.

8. Clean air cleaner; refer to Servicing Air Cleaner, page 7.

9. Lubricate the wheels; refer to Lubrication, page 10.

10. Touch up all rusted or chipped paint surfaces. Toro Re-Kote paint is available from an Authorized TORO Service Dealer.

11. Fill crankcase with oil; refer to Fill Crankcase With Oil, page 4.

12. Charge battery for 72 hours (electric start model); refer to Charging Battery, page 11.

13. Store mower in a clean, dry place. Cover mower to keep it clean and protected.

PRODUCT IDENTIFICATION

A model and a serial number decal is located at rear of mower housing, near the discharge door. Always refer to specific numbers on this decal in correspondence or when replacement parts are needed.

TORO SERVICE SUPPORT

If help - concerning safety, set-up, operation, maintenance, or troubleshooting - is ever needed, contact the local Authorized TORO Service Dealer or Distributor. In addition to skilled service technicians, the dealer and distributor have factory approved accessories and replacement parts. Keep your Toro all TORO. Buy genuine TORO replacement parts and accessories.