FORM NO. 3320-738

TORO

MODEL NO. 26620B - 2000001 & UP
MODEL NO. 26620BG- 2000001 & UP
MODEL NO. 26625B - 2000001 & UP
MODEL NO. 26625BG- 2000001 & UP

OPERATOR'S MANUAL

21" (0.53 M) REAR BAGGER MOWER

ENGLISH

⚠ SAFETY INSTRUCTIONS

WARNING: Engine exhaust contains carbon monoxide which is an odorless, deadly poison. Carbon monoxide is also known to the State of California to cause birth defects. Do not run engine indoors or in an enclosed area.

BEFORE OPERATING

1. Read this manual carefully before operating the mower. Become familiar with the controls and proper use of the mower. Never allow children to operate the mower or adults to operate it without proper instructions.

2. Keep everyone, especially children and pets, away from area of operation. Thoroughly inspect area where mower will be used and remove sticks, stones, wire, and debris.

3. Wear long pants and substantial shoes. Do not operate mower while wearing open sandals or when barefoot.

4. Always wear safety glasses or eye shields during operation to protect eyes from foreign objects that may be thrown from the machine.

5. Check fuel level before starting engine. Do not fill fuel tank indoors, when the engine is running or until engine cools for several minutes after running. Wipe up spilled gasoline before starting engine.

6. Keep all guards, shields, and safety devices in place. Repair or replace damaged parts, including decals. Check all safety devices before each use.

WHILE OPERATING

7. Do not run engine indoors.

8. Always maintain secure footing. Keep a firm grip on the handle and walk; never run. Never operate mower in wet grass. Mow only in daylight or in good artificial light.

9. Mow across the face of slopes; never up and down. Use extreme caution when changing direction on slopes. Do not mow excessively steep slopes.

10. Keep face, hands, and feet away from the mower housing and cutter blade when the engine is running. Stay behind the handle until the engine stops and keep clear of discharge opening at all times.

11. When bagging grass, stop engine before the bag is removed and emptied.

12. Shut engine off and wait for all moving parts to stop before unclogging discharge tunnel.

13. Since the blade rotates for a few seconds after the throttle control is moved to OFF, stay behind the handle until all moving parts stop.

14. After striking a foreign object or if mower vibrates abnormally, stop engine and remove wire from spark plug. Check mower for damage and make all repairs before using mower again.

15. Stop the engine before adjusting the height-of-cut.

16. Stop the engine when crossing a gravel driveway, road or sidewalk.

17. Stop engine before leaving the operator's position—behind the handle. Disconnect wire from spark plug if mower will be unattended or not used.

18. Do not touch muffler or engine or while it is running or shortly after it is stopped because engine will be hot enough to cause a burn.

MAINTENANCE

19. Perform only those maintenance instructions described in this manual. If major repairs are ever needed or if assistance is desired, contact your local Authorized TORO Service Dealer.

©The Toro Company-1991

⚠ SAFETY INSTRUCTIONS

20. Before mower is cleaned, inspected, serviced or adjusted, stop engine and disconnect wire from spark plug. Keep wire away from plug to prevent accidental starting.

21. To ensure the mower is in safe operating condition, frequently check and keep all nuts, bolts, and screws tight. Ensure blade bolt or blade nuts are tightened to proper specifications.

22. To reduce fire hazard, keep engine free of excessive grease, grass, leaves, and accumulations of dirt.

23. Check grass catcher bag frequently for wear or deterioration. Replace with a new bag for your protection. Check that replacement bags comply with TORO's original recommendations or specifications.

24. Allow engine to cool before storing mower in any enclosure. Do not store mower near any open flame or where gasoline fumes may be ignited by a spark.

25. Do not overspeed the engine by changing governor settings.

26. At the time of manufacture, the mower conformed to the safety standards in effect for rotary mowers. To ensure best performance and continued safety certification of the mower, use genuine TORO replacement parts and accessories. Replacement parts and accessories made by other manufacturers may result in non-conformance with the safety standards, and that could be dangerous.

SAFETY SYMBOL GLOSSARY



TABLE OF CONTENTS

	Page
Set-Up Instructions	4
Before Operating	5
Operating Instructions	6
Maintenance	9
Servicing Air Cleaner	9
Replacing Spark Plug	9
Draining Gasoline	10
Adjusting Throttle	10
Changing Crankcase Oil	10
Adjusting Wheel Drive	10
Inspecting/Removing/Sharpening Blade	11
Lubrication	12
Charging Battery	12
Cleaning Mower Housing	13
Preparing Mower For Storage	13
Optional Equipment	14
Product Identification	15
Toro Service Support	15
Maintenance Record	16

SET-UP INSTRUCTIONS

INSTALL HANDLE, BAG AND BATTERY

1. Spread handle ends and slide onto mower housing mounting studs (Fig. 1).

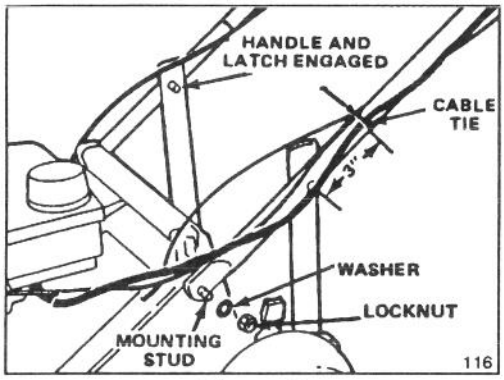

Figure 1

2. Secure each side of handle to mounting studs with a washer and locknut (Fig. 1).

3. Spring handle latches inward. Move handle up or down to snap handle studs into middle hole on both latches (Fig. 1).

4. Handle height may be adjusted to desired position by moving handle studs to one of the other holes in handle latches.

5. Secure control cables to each side of handle approximately 3" above handle stud with cable tie (Fig. 1).

6. To install grass bag, raise discharge door and hook bag frame onto hinge pins (Fig. 2). Allow bag to rest on mower housing over discharge opening. Close door and make sure it seals around top of bag opening (Fig. 3).

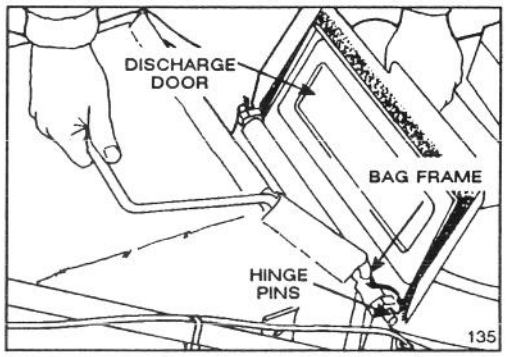

Figure 2

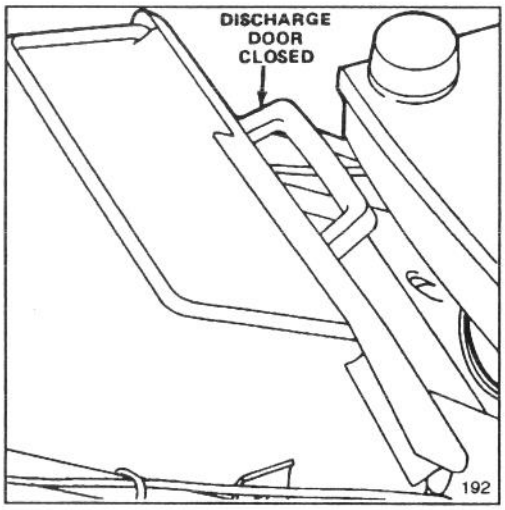

Figure 3

7. Secure control lever to control bar with a capscrew and locknut (Fig. 4).

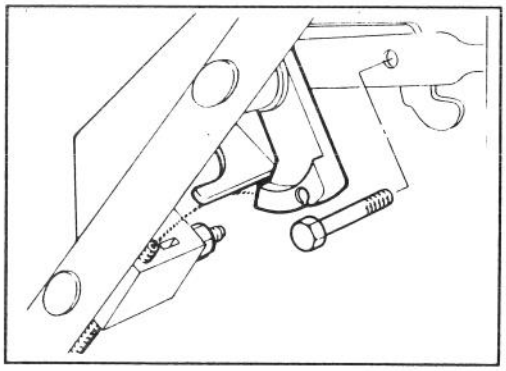

Figure 4

SET–UP INSTRUCTIONS

8. Charge battery (Key start model): refer to Charging Battery, page 12. Slide battery, decal side up, between slots on back of control panel and connect wires (Fig. 5). Insert key into switch when ready to start engine.

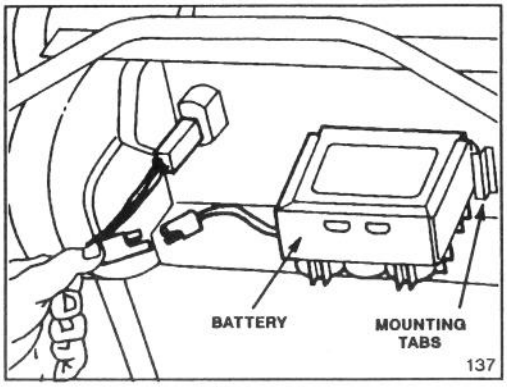

Figure 5

BEFORE OPERATING

FILL CRANKCASE WITH OIL

Initially, crankcase must be filled with 18 ounces (0.532 l) of SAE 10W30 oil. Use any high quality detergent oil having the American Petroleum Institute (API) "service classification" – SC, SD, SE or SF.

Before each use, ensure oil level is between ADD and FULL marks on dipstick (Fig. 6). Add oil if level is low.

1. Position mower on level surface and clean around oil dipstick.

2. Remove dipstick by rotating cap counterclockwise 1/4 turn.

3. Wipe dipstick and insert it into filler neck. Rotate cap clockwise 1/4 turn. Then remove dipstick and check level of oil (Fig. 6). If level is low, add only enough oil to raise level to FULL mark on dipstick. **DO NOT FILL ABOVE FULL MARK BECAUSE ENGINE COULD BE DAMAGED WHEN STARTED. POUR OIL SLOWLY.**

4. Insert dipstick into filler neck and rotate cap clockwise 1/4 turn to lock.

Note: Check oil level each time mower is used or after every 5 operating hours. Initially, change oil after the first 2 hours of operation; thereafter, change oil after every 25 hours of operation. More frequent oil changes are required in dusty or dirty conditions.

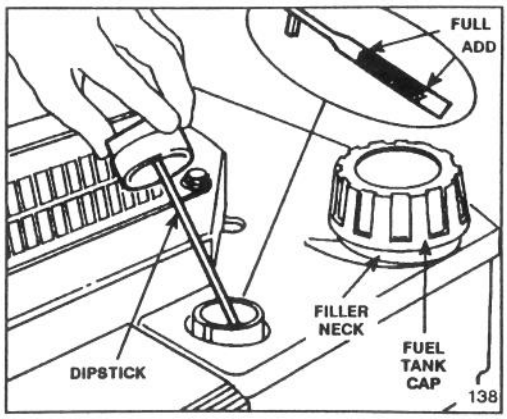

Figure 6

BEFORE OPERATING

WARNING

DANGER: Gasoline is extremely flammable and explosive under certain conditions. Do not smoke when handling fuel and keep fuel far away from open flames and sparks. Never buy more than a 30 day supply of gasoline. Store it in an approved container. Keep gasoline out of reach of children.

Refuel outdoors and only when engine is cold. Do not fill the tank full. Fill tank to 1/4" to 1/2" (6 to 13 mm) from the top of the tank, not into the filler neck. This space is for expansion of fuel. Use funnel or spout to prevent spilling. Wipe up any spilled gas.

FILL FUEL TANK WITH GASOLINE

Note: The Toro Company strongly recommends the use of fresh, clean, **UNLEADED** regular grade gasoline in Toro gasoline powered products. Unleaded gasoline burns cleaner, extends engine life, and promotes good starting by reducing the build-up of combustion chamber deposits. Leaded gasoline can be used if unleaded is not available.

Toro also recommends that Toro Stabilizer/Conditioner be used regularly in all Toro gasoline powered products during operation and storage seasons. Toro Stabilizer/Conditioner cleans the engine during operation and prevents gum-like varnish deposits from forming in the engine during periods of storage.

1. Clean around fuel tank cap and remove cap from tank (Fig. 6). Using unleaded gasoline, add fuel to within 1/4" to 1/2" (6 to 13 mm) from top of tank, not into the filler neck. This space is for expansion of fuel. Do not fill the tank full.

2. Reinstall fuel tank cap and wipe up any spilled gasoline.

IMPORTANT: Do not mix oil with the gasoline. Never use methanol, gasoline containing methanol, gasohol containing more than 10% ethanol, premium gasoline, or white gas because engine fuel system damage could result.

Do not use fuel additives other than those manufactured for fuel stabilization during storage such as Toro's Stabilizer/Conditioner or a similar product. Toro's Stabilizer/Conditioner is a petroleum distillate based stabilizer/conditioner. Toro does not recommend stabilizers with an alcohol base such as ethanol, methanol or isopropyl. Stabilizers should not be used to try to enhance the power or performance of machine.

OPERATING INSTRUCTIONS

OPERATING TIPS

1. CHECK OIL LEVEL – Maintain oil level between ADD and FULL marks as shown on dipstick (Fig. 6).

2. BEFORE EACH MOWING – Ensure self-propelled drive and control bar function properly. When control bar is released, self-propelled drive is designed to stop.

3. CUTTING AND BAGGING – Best results are achieved when engine is running at maximum speed and only about 1/3 of the grass blade is cut. If long grass must be cut, use highest height-of-cut setting for first mowing. Then recut the grass at a more normal setting. If too long of grass is cut, mower may plug and cause engine to stall.

When cutting in dry, dusty conditions move the throttle to a slower speed to reduce the amount of dust generated by mower.

4. SHARP BLADE – Begin each cutting season with a sharp blade. Periodically file down nicks.

OPERATING INSTRUCTIONS

STARTING, STOPPING AND SELF-PROPELLING

1. CONTROLS – Key switch (Key start models), throttle, ground speed control, and self-propelled control bar are on upper handle (Fig. 7). Fingertip starter is on top of engine (Fig. 8).

2. Push spark plug wire onto spark plug and on self-propelled models move ground speed control to "N" (Fig. 7).

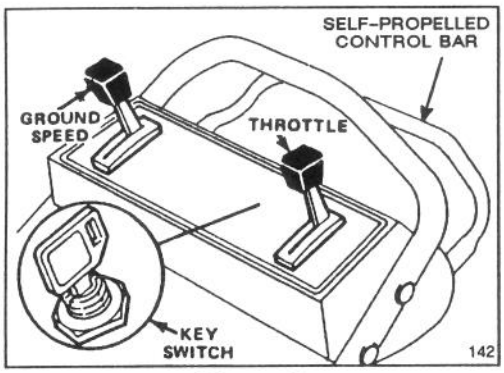

Figure 7

3. MANUAL STARTING – Move throttle to CHOKE. Brace yourself and mower securely by placing your foot on the top left side of mower housing. Pull fingertip starter out until positive engagement results; then pull vigorously to start the engine. When engine starts, remove throttle from CHOKE and regulate as desired.

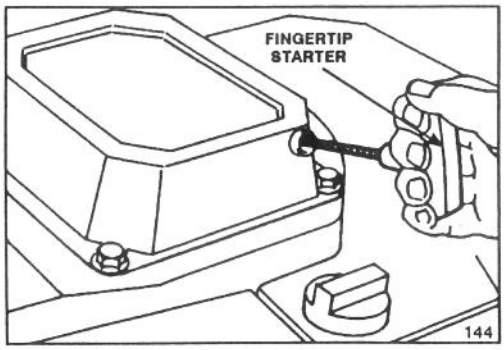

Figure 8

4. KEY-LECTRIC STARTING – Move throttle (Fig. 7) to CHOKE. Turn key (Fig. 7) to START and release when engine begins running. When engine starts, remove throttle from CHOKE and regulate as desired.

Note: If battery is discharged, engine can be started with the fingertip starter.

5. TRACTION OPERATION (self-propelled model) – Move ground speed control to desired setting and squeeze control bar against handle to drive. Ground speed varies, depending on space between control bar and handle (Fig. 9).

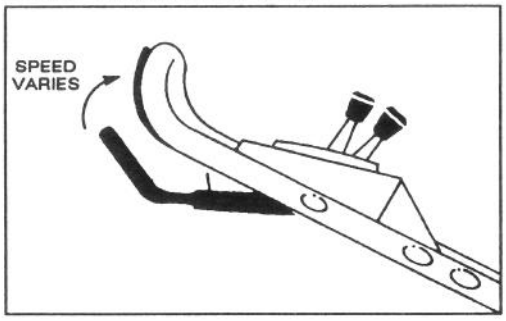

Figure 9

Note: The drive wheels are equipped with freewheeling clutches which enable the mower to be pulled rearward easier when the wheel drive is disengaged. To disengage the clutches, mower must be pushed forward at least 1" after wheel drive operation has stopped.

6. STOPPING (Fig. 7) – Release control bar to stop traction drive. Move ground speed control to "N" on self-propelled models. To stop engine, move throttle to OFF. Remove key from switch (key start model) and pull wire off spark plug if mower is unattended or not used.

USING GRASS BAG

1. Stop engine and wait for all parts to stop.

2. INSTALLING BAG – Raise discharge door and hook bag frame onto hinge pins (Fig. 10). Allow bag to rest on mower housing over discharge opening. Close door and make sure it seals around top of bag opening.

OPERATING INSTRUCTIONS

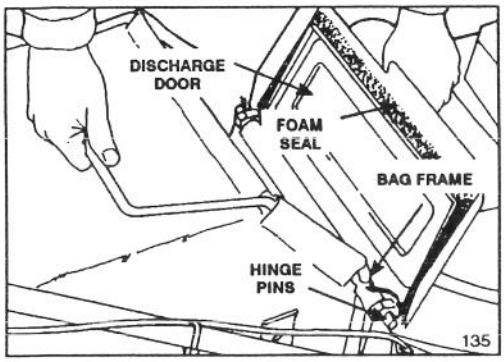

Figure 10

3. CHECKING BAG – To see if grass bag is full, release control bar, move throttle to OFF, and wait for blade to stop. Feel the bag to determine whether bag needs to be emptied.

⚠ CAUTION

Never open discharge tunnel door on mower when grass bag is not installed and engine is running because grass clippings and other debris discharges with enough force to cause injury.

The grass bag material will catch and contain the majority of foreign objects such as small stones and other similar debris. The bag material, however, is subject to normal wear and deterioration. So check the bag frequently, and if it is worn, install a new genuine TORO replacement bag that has this or a similar warning.

4. REMOVING BAG – Release control bar, move throttle to OFF, and wait for all moving parts to stop. For protection, always keep hands and feet away from mower housing when engine is running. Open discharge door. While holding discharge door, grasp handle on grass bag and lift bag off mower. Allow discharge door to close.

5. EMPTYING BAG – Grasp bag frame handle and rear of bag. Gradually raise rear of bag while shaking bag to empty.

Note: If grass bag is overfilled, some clippings may remain in discharge opening when bag is removed. Normally, these clippings will be blown into grass bag when the bag is reinstalled and the blade is engaged.

DANGER: If the discharge opening remains plugged, be sure to stop engine and wait for all moving parts to stop before attempting to clear any clippings from the mower.

ADJUSTING HEIGHT-OF-CUT

Three numbers cast into the housing represent the height-of-cut settings. The diamond between each number represents a 1/2" increment.

⚠ DANGER

Do not adjust the height-of-cut settings when engine is running.

1. Stop the engine.

2. For easier adjustment, lift housing up so wheel is off ground. **Do not place hands under deck to lift housing.** Squeeze adjusting lever toward wheel and move to desired setting (Fig. 11). Ensure pin on adjusting lever engages notch in housing. Adjust all wheels to the same setting.

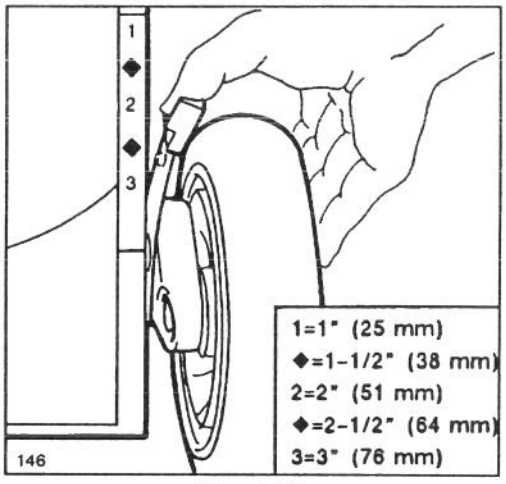

Figure 11

OPERATING INSTRUCTIONS

Note: Front wheels can be adjusted to 1/2". Move adjusting lever past "1" and release pin into notch in housing.

3. In conditions when maximum power is required or when cutting in spongy thatch that causes rear wheels to sink in turf, raise rear wheel setting one increment higher. Make sure wheel settings are returned to equal settings, when cutting in normal conditions, to achieve the best quality of cut.

MAINTENANCE

⚠ CAUTION

Pull wire off spark plug before performing adjustments or maintenance.

SERVICING AIR CLEANER

Normally, clean air cleaner after every 25 operating hours. More frequent cleaning is required when mower is operated in dusty or dirty conditions.

1. Stop engine and pull wire off spark plug.

2. Push in locking tabs and lift off air cleaner cover. Clean cover thoroughly (Fig. 12).

3. If top of foam element is dirty, remove it from air cleaner body (Fig. 12). Clean thoroughly.

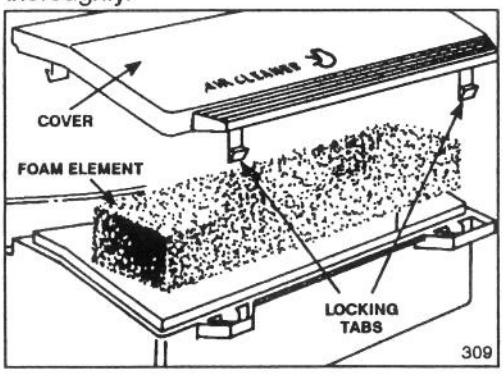

Figure 12

A. WASH foam element in a solution of liquid soap and warm water. Squeeze to remove dirt, but do not twist because foam may tear. Rinse thoroughly in clear water.

B. DRY by wrapping in a clean rag. Squeeze rag and foam element to dry.

C. SATURATE element with approximately 3 ounces (90 ml) of SAE 10W30 engine oil. Squeeze element to remove excess oil and to distribute oil thoroughly. A damp element is desirable.

4. Reinstall foam element and air cleaner cover.

IMPORTANT: Do not operate engine without air cleaner element because extreme engine wear and damage will likely result.

REPLACING SPARK PLUG

Use an NGK BPR6ES spark plug or equivalent. Correct air gap is 0.032" (0.81 mm). Remove plug after every 25 operating hours and check its condition.

1. Stop engine and pull wire off spark plug.

2. Clean around spark plug and remove plug from cylinder head.

IMPORTANT: Replace a cracked, fouled or dirty spark plug. Do not sand blast, scrape or clean electrodes because engine damage could result from grit entering cylinder.

3. Set air gap at 0.032" (0.81 mm) (Fig. 13). Install correctly gapped spark plug and gasket seal. Tighten plug firmly to 15 ft-lb (20.4 N·m).

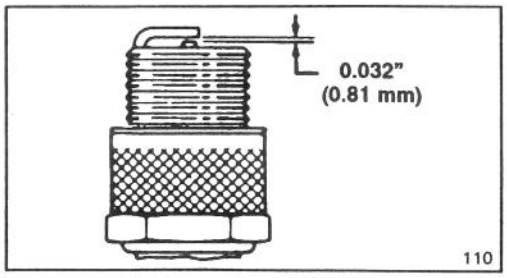

Figure 13

MAINTENANCE

DRAINING GASOLINE

1. Stop engine and pull wire off spark plug.
2. Remove cap from fuel tank and use pump-type syphon to drain fuel into clean gas can.

Note: This is the only procedure recommended for draining fuel.

ADJUSTING THROTTLE

Throttle control adjustment may be required if engine does not start or stop. Whenever a new throttle control cable is installed, throttle must be adjusted.

1. Stop engine and pull wire off spark plug.
2. Close door on mower housing and remove grass bag.
3. Move throttle control to FAST (Fig. 7).
4. Loosen cable clamp screw until throttle cable slides (Fig. 14). Align holes in throttle lever and throttle bracket. Pull throttle cable slightly to remove any slack and tighten cable clamp screw to lock adjustment in place.

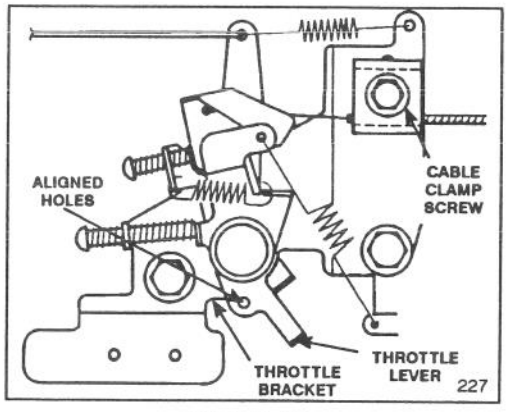

Figure 14

CHANGING CRANKCASE OIL

Change oil after the first 2 operating hours and after every 25 hours thereafter. Since warm oil drains better and carries more contaminants than cold, run engine for a minute or so before draining oil.

1. Stop engine and pull wire off spark plug.
2. Remove grass bag. Drain gasoline from fuel tank: refer to Draining Gasoline, page 10.
3. Raise left side of mower at least 12 inches and remove drain plug using a 14mm wrench. Place a drain pan at left side of mower.

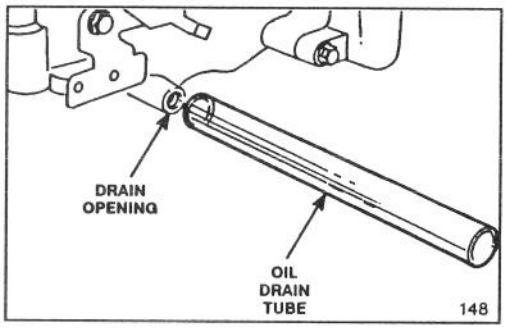

Figure 15

4. Insert oil drain tube over drain opening (Fig. 15) and lower mower. Raise right side of mower until all oil has flowed into drain pan.
5. After draining, install drain plug and fill engine with fresh oil: refer to Fill Crankcase With Oil, page 5.

ADJUSTING WHEEL DRIVE

If mower does not self-propel or has a tendency to creep forward when drive is not engaged, an adjustment to the wheel traction control cable is necessary.

1. Stop engine and pull wire off spark plug.
2. Loosen nut on support block (Fig. 16).
3. Loosen bottom jam nut on wheel traction cable (Fig. 16).

MAINTENANCE

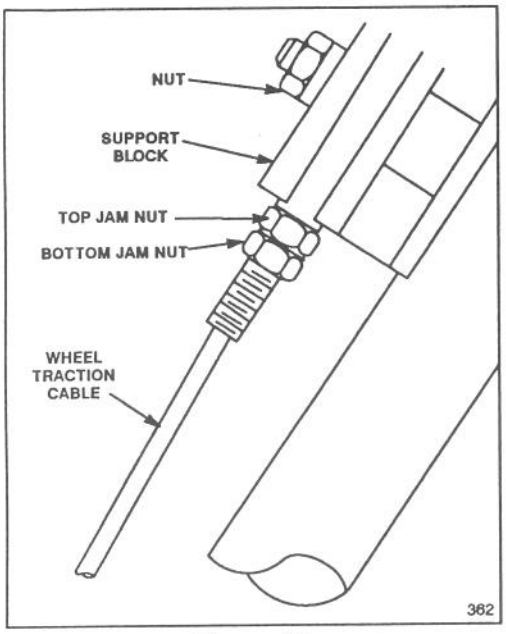

Figure 16

4. Lift control bar until some resistance is felt. Control bar should be 1-1/2" from handle when properly adjusted (Fig. 17).

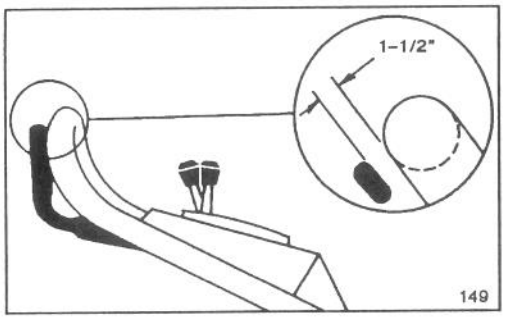

Figure 17

5. Move the top jam nut up to increase the clearance between the control bar and handle. Move top jam nut down to decrease the clearance between the control bar and the handle.

6. Repeat steps 4 and 5 until properly adjusted.

7. Tighten bottom jam nut to lock the adjustment.

8. Top jam nut should be against support block when adjustment is complete (Fig. 16).

9. Tighten nut on support block.

INSPECTING/REMOVING/SHARPENING BLADE

1. Stop engine and pull wire off spark plug.

2. Drain gasoline from fuel tank; refer to Draining Gasoline, page 10.

3. Tip mower on its right side. Avoid rotating blade as starting problems may result.

4. INSPECTING BLADE – Carefully examine blade for sharpness and wear, especially where flat and curved parts meet (Fig. 18A). Since sand and abrasive material can wear away the metal that connects the flat and curved parts of the blade, check blade before using the mower. If a slot or wear is noticed, (Fig. 18B & C), replace blade. Refer to step 5.

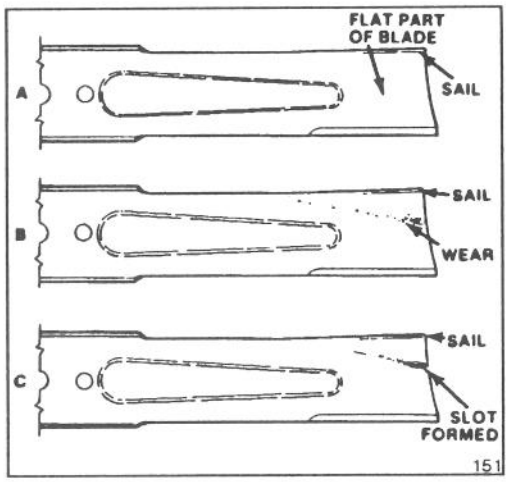

Figure 18

5. REMOVING BLADE – Grasp end of blade using a rag or thickly padded glove. Remove blade bolt, lockwasher and blade (Fig. 19).

MAINTENANCE

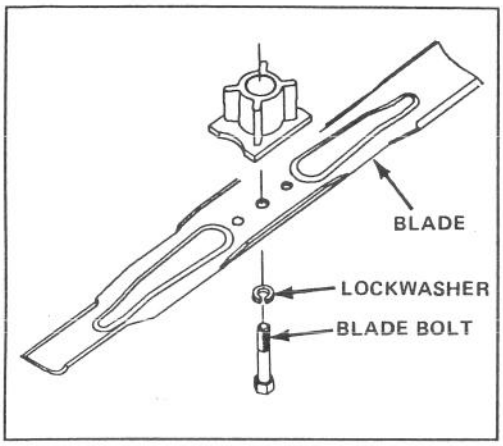

Figure 19

⚠ WARNING

If blade is allowed to wear, a slot may form near the sail. Eventually a piece of blade may break off resulting in serious injury to yourself or a bystander.

Note: For best performance, install new blade before cutting season begins. During the year, file down small nicks to maintain the cutting edge.

6. SHARPENING BLADE—Using a file, sharpen top side of blade and maintain original cutting angle (Fig. 20). The blade will remain balanced if the same amount of material is removed from both cutting edges.

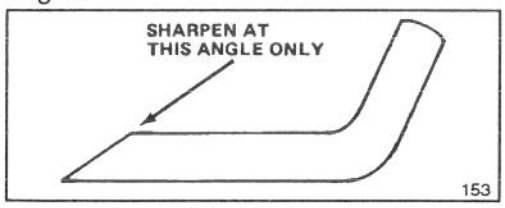

Figure 20

IMPORTANT: Check balance of blade by putting it on a blade balancer. An inexpensive balancer can be purchased at a hardware store. A balanced blade will stay in a horizontal position and an unbalanced blade will settle to the heavy side. If the blade is not balanced, file more metal off cutting edge on heavy end of blade.

7. Install sharp, balanced blade and blade bolt. Sail part of blade must point toward top of mower housing to ensure correct installation. Tighten the blade bolt to 50 ft-lb (68 N·m).

LUBRICATION

After every 25 operating hours or when season ends, front and rear wheels must be lubricated.

1. Apply 2 or 3 drops of light oil on inside and outside of all wheel bolts. Spin wheels to distribute oil into bushings. Wipe up excess oil.

2. Move rear wheel height-of-cut levers to "2" setting. Wipe grease fittings with clean rag (Fig. 21). Install grease gun onto fitting and gently apply 2 or 3 pumps of #2 Multi-Purpose Lithium Base Grease.

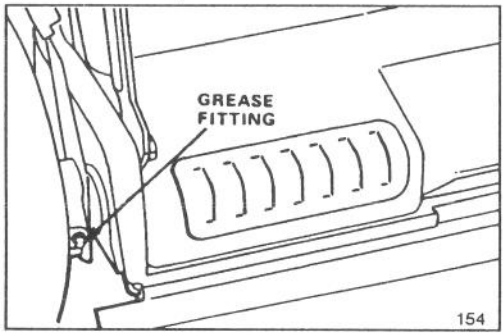

Figure 21

CHARGING BATTERY

Although a new battery is not fully charged, a partial charge of 4 hours will provide enough energy for several starts. However, a new battery must be charged for 72 continuous hours to ensure full charge. Also charge battery for 72 hours when mower is stored and in the spring. During normal operation, engine alternator keeps battery charged.

1. Stop engine and disconnect wire harness from battery terminal (Fig. 22).

2. If desired, battery can be removed by sliding it out of mounting slots. However, removal is not required if mower can be positioned near an electrical outlet.

MAINTENANCE

3. Connect TORO electro charger to battery and plug into power outlet. After charging battery for specified time, unplug charger and disconnect from battery.

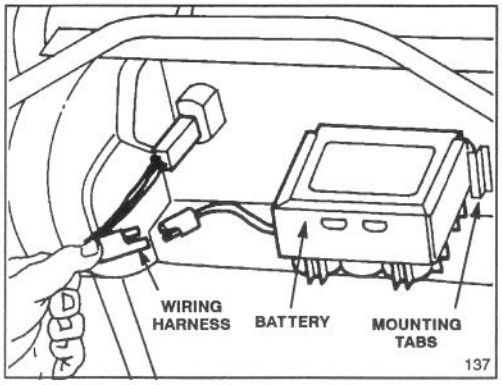

Figure 22

4. Connect wiring harness to battery terminal.

IMPORTANT: Only the TORO electro charger is recommended because other chargers could damage the battery. Always use charger indoors and charge battery at room temperature (+70°F) whenever possible. Do not charge battery longer than 72 hours because damage could result.

CLEANING MOWER HOUSING

To ensure best performance, keep underside of mower housing and inside of discharge area clean.

1. Stop engine and pull wire off spark plug.

2. Drain gasoline from fuel tank: refer to Draining Gasoline, page 10.

3. Tip mower on its right side (Fig. 23). Avoid rotating blade as starting problems may result.

4. Remove dirt and grass clippings that stick to housing by spraying it with a garden hose. Scrape out remaining debris with hardwood scraper. Avoid burrs and sharp edges.

5. Clean discharge door and hinges of grass or debris that may impair operation of door. Use caution when cleaning door so you do not damage foam seal.

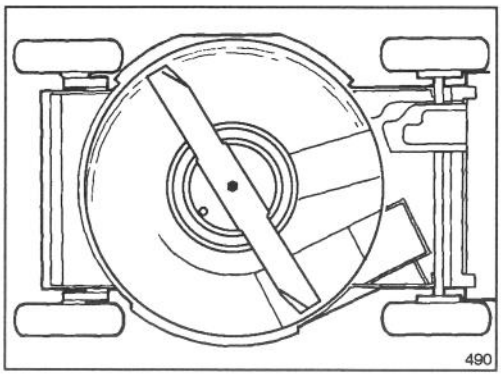

Figure 23

6. Remove access cover on mower housing (Fig. 24) and clean around gear box.

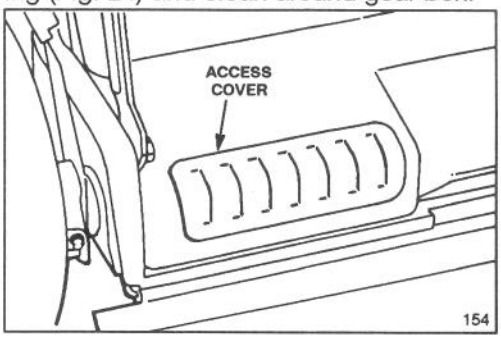

Figure 24

PREPARING MOWER FOR STORAGE

1. For long term storage, either drain gasoline from fuel tank or add a fuel additive to the gasoline. To drain gasoline, refer to Draining Gasoline, page 10. After fuel is drained, start engine and let it idle until all fuel is consumed and engine stops. If gasoline is not drained and a fuel stabilizer is not added, gum-like varnish deposits will form and cause poor engine operation, even starting problems.

Fuel can be left in gas tank only if a fuel stabilizer, such as Toro's Stabilizer/Conditioner, is added to gasoline before storing. Toro's Stabilizer/Conditioner is a petroleum distillate based stabilizer/conditioner. Toro does not recommend stabilizers with an alcohol base, such as ethanol, methanol or isopropyl. Use fuel stabilizer in recommended quantities as specified on container.

MAINTENANCE

Under normal conditions, fuel additives remain effective in fuel for 6–8 months.

2. Drain oil: refer to Changing Crankcase Oil, page 10. After oil is drained, do not fill crankcase with oil until the following steps (3–10) are completed.

3. Remove spark plug and pour 2 tablespoons of SAE 10W30 oil into hole in cylinder. Pull starter rope slowly to coat inside of cylinder. Install spark plug and tighten to 15 ft-lb (20.4 N·m). **DO NOT REINSTALL WIRE ON SPARK PLUG.**

4. Clean mower housing: refer to Cleaning Mower Housing, page 13.

5. Check condition of blade: refer to Inspecting/Removing/Sharpening Blade, page 11.

6. Tighten all nuts, bolts, and screws.

7. Clean dirt and chaff from cylinder, cylinder head fins, and blower housing. Also remove grass clippings, dirt, and grime from external parts of the engine, shrouding, and top of mower housing.

8. Clean air cleaner: refer to Servicing Air Cleaner, page 9.

9. Lubricate the wheels: refer to Lubrication, page 12.

10. Touch up all rusted or chipped paint surfaces. Toro Re-Kote paint is available from an Authorized TORO Service Dealer.

11. Fill crankcase with oil: refer to Fill Crankcase With Oil, page 5.

12. Charge battery for 72 hours: refer to Charging Battery, page 12.

13. Store mower in a clean, dry place. Cover mower to keep it clean and protected.

OPTIONAL EQUIPMENT

For special conditions the following accessories may be purchased at your local authorized TORO Service Dealer.

1. Side Discharge Kit, Model No. 59112 – Installs in seconds. Rear mounted in place of the grass bag. Disperses clippings while trimming on both sides (Fig. 25).

2. Dethatcher Kit, Model No. 59131 – Installs in minutes. Front mounted for easy maneuverability. Spring tines loosen thatch for clean vacuuming into grass bag (Fig. 26) and convenient disposal.

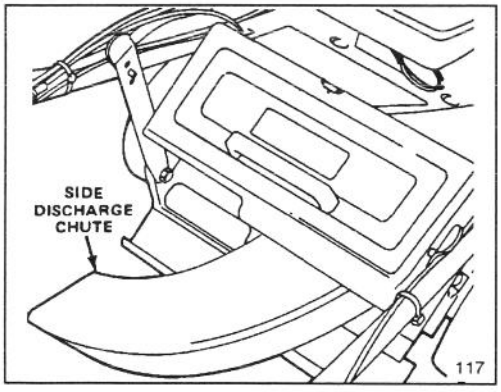

Figure 25

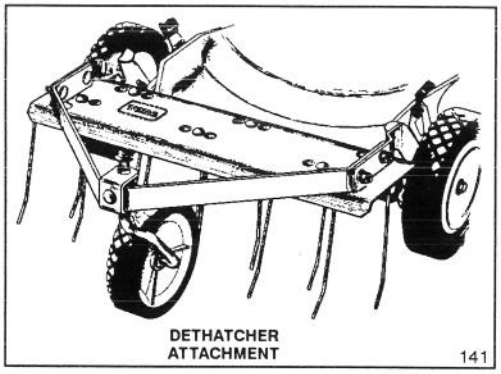

Figure 26

OPTIONAL EQUIPMENT

3. Leaf Shredder Kit, Model No. 59180 – Installs on underside of mower in minutes without requiring removal of blade. Shreds leaves into small pieces for clean vacuuming into grass bag and convenient disposal (Fig. 27).

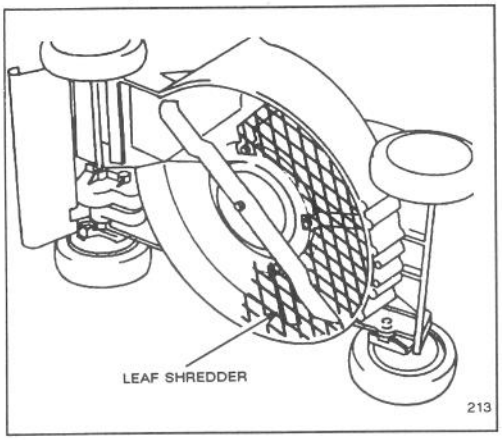

Figure 27

4. Mulching Plug Kit, Model No. 59181 – Includes mulching plug (Fig. 28), mulching blade, blade stiffener and anti-scalp cup. Converts rear bagging mower into a mulching mower.

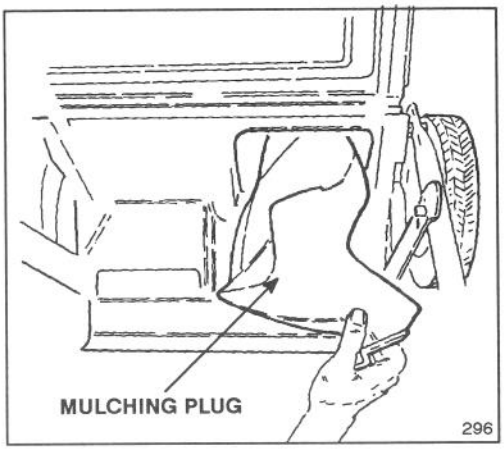

Figure 28

5. Spark Arrestor, Part No. 56-6730 – If a spark arrestor is required because of local, state, or federal regulations, it may be purchased at your local Authorized TORO Service Dealer. If mower is operated on any California forest, brush, or grass covered land without a properly operating spark arrestor, the operator is violating state law, Section 4442 Public Resources Code.

PRODUCT IDENTIFICATION

A model and a serial number decal is located on underside of control panel. Always refer to specific numbers on this decal in correspondence or when replacement parts are needed.

TORO SERVICE SUPPORT

If help - concerning safety, set-up, operation, maintenance, or troubleshooting - is ever needed, contact the local Authorized TORO Service Dealer or Distributor. Refer to the "Yellow Pages" for assistance. In addition to skilled service technicians, the dealer and distributor have factory approved accessories and replacement parts. Keep your Toro all TORO. Buy genuine TORO replacement parts and accessories.

MAINTENANCE RECORD

Date	Hours Used	Oil Change	Air Cleaner Service	Lubrication	Spark Plug	Winter Storage