FORM NO. 3320-732

TORO®

MODEL NO. 26621B-2000001 & UP

OPERATOR'S MANUAL

21" (0.53 m) REAR BAGGER

⚠ SAFETY INSTRUCTIONS

WARNING: Engine exhaust contains monoxide which is an odorless, deadly poison. Carbon monoxide is also known to the State of California to cause birth defects. Do not run engine indoors or in an enclosed area.

BEFORE OPERATING

1. Read this manual carefully before operating the mower. Become familiar with the controls and proper use of the mower. Never allow children to operate the mower or adults to operate it without proper instructions.

2. Keep everyone, especially children and pets, away from the area of operation. Thoroughly inspect area where mower will be used and remove sticks, stones, wire and debris.

3. Wear long pants and substantial shoes. Do not operate mower while wearing open sandals or when barefoot.

4. Check fuel level before starting engine. Do not fill fuel tank indoors, when the engine is running, or until engine cools for several minutes after running. Wipe up spilled gasoline before starting engine.

5. Keep all guards, shields and safety devices in place. Repair or replace defective or damaged parts.

WHILE OPERATING

6. Traction drive and blade are designed to stop when control bar is released. Assure control and brake function properly before each use of mower.

7. Do not run engine indoors.

8. Always maintain secure footing. Keep a firm grip on the handle and walk; never run. Never operate mower in wet grass. Mow only in daylight or good artificial light.

9. Mow across the face of slopes; never up and down. Use extreme caution when changing direction on slopes. Do not mow excessively steep slopes.

10. Always wear safety glasses or eye shields during operation to protect eyes from foreign objects that may be thrown from the machine. Keep face, hands and feet away from the mower housing and cutter blade when the engine is running. Stay behind the handle until the engine stops and keep clear of discharge opening at all times.

11. When mulching, assure discharge door is closed. When bagging grass, stop engine before the bag is removed and emptied.

12. Shut engine off and wait for all moving parts to stop before unclogging chute.

13. Since the blade rotates for a few seconds after the control bar is released, stay behind the handle until all moving parts stop.

14. After striking a foreign object or if mower vibrates abnormally, stop engine and remove wire from spark plug. Check mower for damage and make all repairs before using mower again.

15. Stop the engine before adjusting the height-of-cut.

16. Stop the engine before crossing a gravel driveway, road or sidewalk.

17. Stop engine before leaving the operator's position – behind the handle. Disconnect wire from spark plug if mower will be unattended.

18. Do not touch muffler or engine while it is running or shortly after it is stopped because muffler or engine will be hot enough to cause a burn.

MAINTENANCE

19. Perform only those maintenance instructions described in this manual. If major repairs are ever needed or if assistance is desired, contact an Authorized TORO Service Dealer.

20. Before mower is cleaned, inspected, serviced or adjusted, stop engine and disconnect wire from spark plug. Keep wire away from plug to prevent accidental starting.

21. To assure the mower is in safe operating condition, frequently check and keep all nuts, bolts and screws tight. Assure blade nuts are tightened to 15-27 ft-lb. (20-37 N-m).

22. To reduce fire hazard, keep engine free of excessive grease, grass, leaves and accumulations of dirt.

ENGLISH

© The Toro Company – 1991

⚠ SAFETY INSTRUCTIONS

23. Check grass catcher bag frequently for wear or deterioration. Replace with a new bag for your protection.

24. Allow engine to cool before storing mower in any enclosure. Do not store mower near any open flame or where gasoline fumes may be ignited by a spark.

25. Do not overspeed the engine by changing governor settings.

26. At the time of manufacture the mower conformed to the safety standards in effect for rotary mowers. To assure optimum performance and continued safety certification of the mower, use genuine TORO replacement parts and accessories. Replacement parts and accessories made by other manufacturers may result in non-conformance with the safety standards, and that could be dangerous.

SYMBOL GLOSSARY



Safety alert



Keep hands and feet away from rotating blade



Place foot here when starting



Keep hands away



Keep bystanders from area being mowed



Keep all guards in place



Choke on



Neutral



Never open chute door on mower when engine is running, unless grass bag or side discharge attachment is installed



Stop engine before leaving operator position



Slow



Fast



Traction drive - ENGAGED



Traction drive - DISENGAGED



Read and understand operator's manual



Engine speed (Throttle)

TABLE OF CONTENTS

	Page
Set-Up Instructions	3
Before Operating	4
Operating Instructions	5-8
Maintenance	8-13
Servicing Air Cleaner	8
Replacing Spark Plug	8
Draining Gasoline	9
Adjusting Throttle	9
Changing Crankcase Oil	9
Adjusting Wheel Drive	9-10
Inspecting/Removing/Sharpening Blade	10-11
Lubrication	11
Adjusting Blade Brake	11
Cleaning Blade Brake Clutch Shields	11-12
Cleaning Mower Housing	12-13
Preparing Mower for Storage	13
Optional Spark Arrestor	14
Product Identification	14
Toro Service Support	14
Maintenance Record	14

SET-UP INSTRUCTIONS

INSTALL HANDLE AND BAG

1. Spread handle ends and slide onto mower housing mounting studs (Fig. 1).

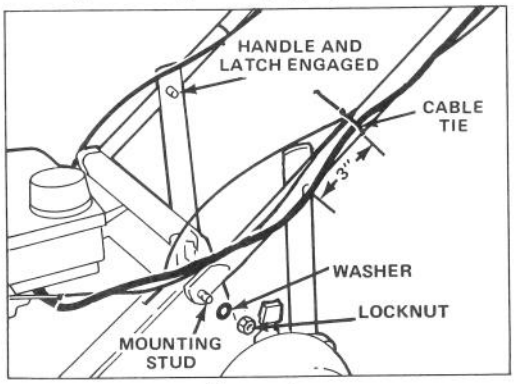

Figure 1

2. Secure each side of handle to mounting studs with a washer and locknut (Fig. 1).

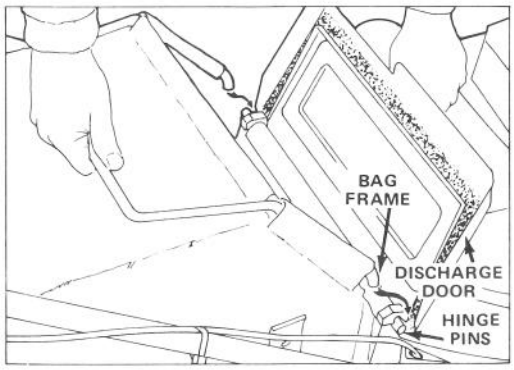

Figure 2

3. Spring handle latches inward, move handle up or down to snap handle studs into middle hole on both latches (Fig. 1).

4. Handle height may be adjusted to desired position by moving handle studs to one of the other holes in handle latches.

5. Secure control cables to each side of handle approximately 3" above handle stud (Fig. 1).

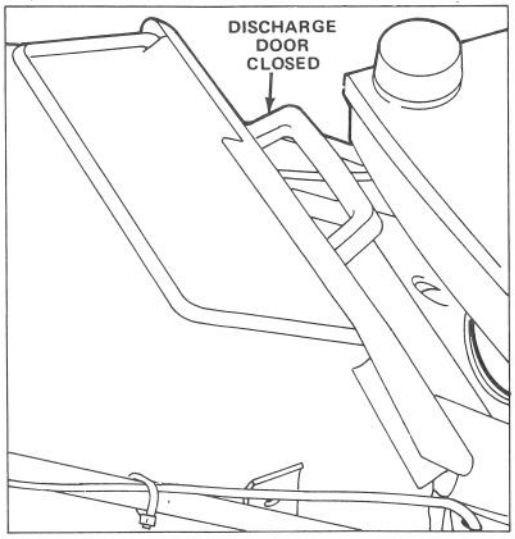

Figure 3

6. To install grass bag, raise discharge door and hook bag frame onto hinge pins (Fig. 2). Allow bag to rest on mower housing over discharge opening. Close door and make sure it seals around top of bag opening (Fig. 3).

BEFORE OPERATING

FILL CRANKCASE WITH OIL

Initially, crankcase must be filled with 18 ounces (0.532 l) of SAE 10W30 oil. Use any high quality detergent oil having the American Petroleum Institute – API – "service classification" MS, SC, SD, SE or SF.

Before each use, assure oil level is between ADD and FULL marks on dipstick. Add oil if level is low.

1. Position mower on level surface and clean around oil dipstick.

2. Remove dipstick by rotating cap counterclockwise 1/4 turn.

3. Wipe dipstick and insert it into filler neck. Rotate cap clockwise 1/4 turn. Then remove dipstick and check oil level (Fig. 4). If level is low, add only enough oil to raise level to FULL mark on dipstick. DO NOT FILL ABOVE FULL MARK BECAUSE ENGINE COULD BE DAMAGED WHEN STARTED. POUR OIL SLOWLY.

4. Insert dipstick into filler neck and rotate cap clockwise 1/4 turn to lock.

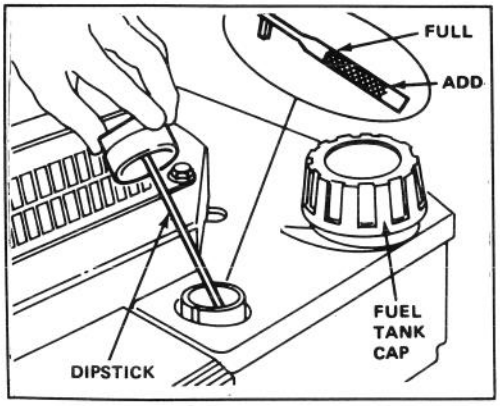

Figure 4

Note: Check oil level each time mower is used or after every 5 operating hours. Initially, change oil after the first 2 hours of operation; thereafter, change oil after every 25 hours of operation. More frequent oil changes are required in dusty or dirty conditions.

FILL FUEL TANK WITH GASOLINE

Note: The Toro Company strongly recommends the use of fresh, clean, UNLEADED regular grade gasoline in Toro gasoline powered products. Unleaded gasoline burns cleaner, extends engine life, and promotes good starting by reducing the build-up of combustion chamber deposits. Leaded gasoline can be used if unleaded is not available.

1. Clean around fuel tank cap and remove cap from fuel tank (Fig. 4). Using unleaded gasoline, fill fuel tank to within ¼" to ½ inch (6-13 mm) from top of tank.

2. Install fuel tank cap and wipe up any spilled gasoline.

IMPORTANT: Do not mix oil with the gasoline. Never use methanol, gasoline containing methanol, gasohol containing more than 10% ethanol, premium gasoline, or white gas because engine fuel system damage could result.

Toro also recommends that Toro Stabilizer/Conditioner be used regularly in all Toro Gasoline powered products during operation and storage seasons. Toro Stabilizer/Conditioner cleans the engine during operation and prevents gum-like varnish deposits from forming in the engine during periods of storage.

DO NOT USE FUEL ADDITIVES OTHER THAN THOSE MANUFACTURED FOR FUEL STABILIZATION DURING STORAGE SUCH AS TORO'S STABILIZER/CONDITIONER OR A SIMILAR PRODUCT. TORO'S STABILIZER/CONDITIONER IS A PETROLEUM DISTILLATE BASED CONDITIONER/STABILIZER. TORO DOES NOT RECOMMEND STABILIZERS WITH AN ALCOHOL BASE SUCH AS ETHANOL, METHANOL OR ISOPROPYL. ADDITIVES SHOULD NOT BE USED TO TRY TO ENHANCE THE POWER OR PERFORMANCE OF MACHINE.

DANGER

Gasoline is extremely flammable and explosive under certain conditions. Do not smoke when handling fuel and keep fuel far away from open flames and sparks. Never buy more than a 30 day supply of gasoline. Store gasoline in an approved container and keep it out of the reach of children.

Refuel outdoors, only when engine is cold. Fill tank to within ¼" to ½" (6 to 13 mm) from its top. This space is for expansion of fuel. Use funnel or spout to prevent spilling. Wipe up any spilled gas.

OPERATING INSTRUCTIONS

4-in-1 MOWING VERSATILITY

REAR BAG – Bag lush grass in the spring to help keep your lawn free of thatch forming clippings.

MULCH – In summer, when grass grows slower and is drier, mulch by removing the grass bag and closing the discharge door (Fig. 5).

SIDE DISCHARGE – Disperse clippings with optional, rear-mounted side discharge chute which installs in seconds. Between the handle design lets you trim on both sides (Fig. 6).

REMOVE THATCH – As spring tines on optional Toro Dethatcher scratch and vibrate through the grass, thatch is loosened and conveniently vacuumed into the bag (Fig. 7).

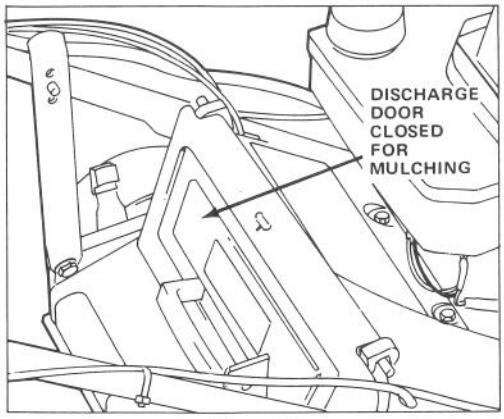

Figure 5

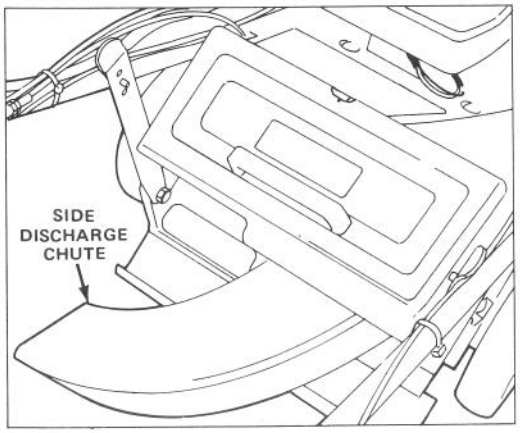

Figure 6

OPERATING TIPS

1. CHECK OIL LEVEL – Maintain oil level between ADD and FULL marks as shown on dipstick.

2. BEFORE EACH MOWING – Assure blade brake, self-propelled drive and control bar function properly. When control bar is released, blade and self-propelled drive are designed to stop.

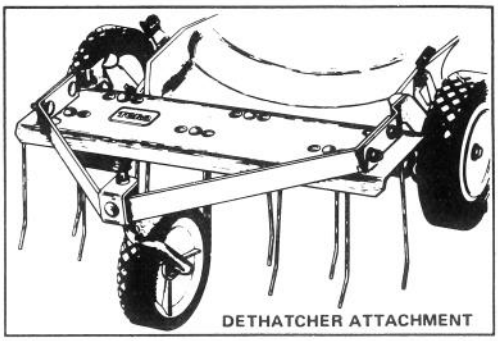

Figure 7

3. CUTTING AND BAGGING – Best results are achieved when engine is running at maximum speed and only about 1/3 of the grass blade is cut. If long grass must be cut, use highest height-of-cut setting for first mowing. Then recut the grass at a more normal setting. If too long of grass is cut, mower may plug and cause engine to stall.

When cutting in dry, dusty conditions move the throttle to a slower speed to reduce the amount of dust generated by mower.

4. SHARP BLADE – Begin each cutting season with a sharp blade. Periodically file down nicks.

STARTING, STOPPING AND SELF-PROPELLING

1. CONTROLS – Throttle, ground speed control and self-propelled control bar are on upper handle (Fig. 8). Fingertip starter is on top of engine.

2. Push wire onto spark plug and on self-propelled models move ground speed control to "N" (Fig. 8).

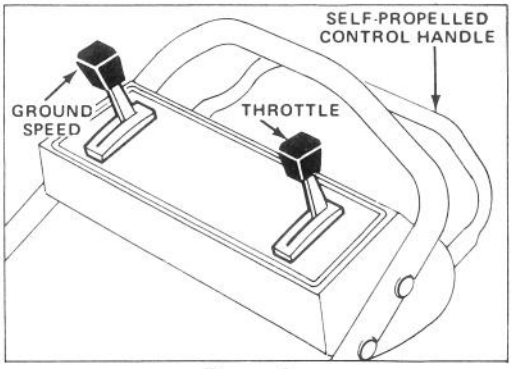

Figure 8

3. FINGERTIP STARTING – Move throttle to CHOKE. Brace yourself and mower securely by

OPERATING INSTRUCTIONS

placing your foot on the top left side of mower housing where indicated by the foot symbol. Pull engine mounted fingertip starter (Fig. 9) out until positive engagement results; then pull vigorously to start the engine. Regulate throttle as desired when engine starts.

4. GROUND SPEED (Fig. 8) – Move ground speed control to desired setting. Number "1" is slow, "2" is medium, and "3" is a fast walking pace. Move ground speed control to "N" when using the mower for trimming and whenever leaving mower.

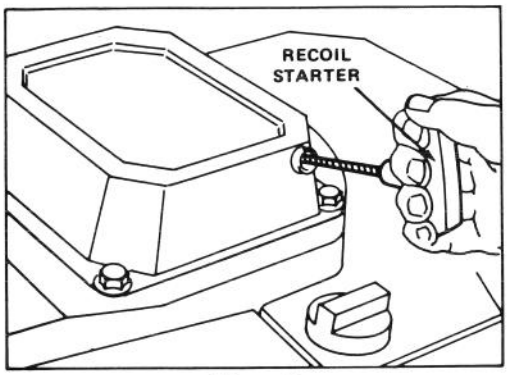

Figure 9

5. BLADE AND TRACTION OPERATION (Fig. 10) – Move control bar down to "A" and raise to engage blade "B". Move ground speed control to desired setting and squeeze control bar against handle "C" to drive. Ground speed varies, depending on space between control bar and handle. To disengage traction drive, but keep blade engaged, gradually release control bar to mid position. To self-propel with blade disengaged, eliminate downward movement necessary for blade engagement and squeeze control bar against handle.

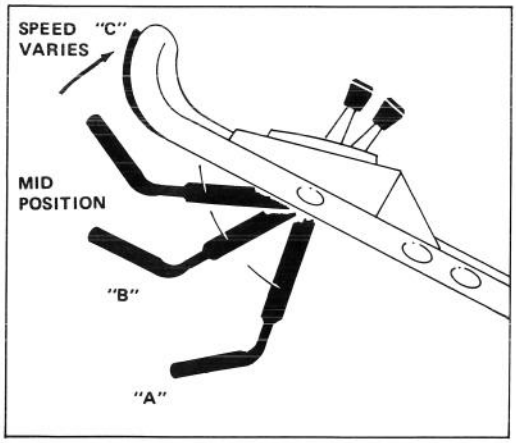

Figure 10

NOTE: The drive wheels are equipped with freewheeling clutches which enable the mower to be pulled rearward easier when the wheel drive is disengaged. To disengage the clutches, mower must be pushed forward at least 1" after wheel drive operation has stopped.

6. STOPPING (Fig. 8) – Release control bar to stop blade and traction drive. Move ground speed control to "N". To stop engine, move throttle to OFF. Pull wire off spark plug if mower is unattended or not used.

USING GRASS BAG

1. Stop engine and wait for all parts to stop.

2. INSTALLING BAG – Raise discharge door and hook bag frame onto hinge pins (Fig. 11). Allow bag to rest on mower housing over discharge opening. Close door and make sure it seals around top of bag opening.

3. CHECKING BAG – To see if grass bag is full, release control bar and wait for blade to stop. Feel the bag to determine whether bag needs to be emptied.

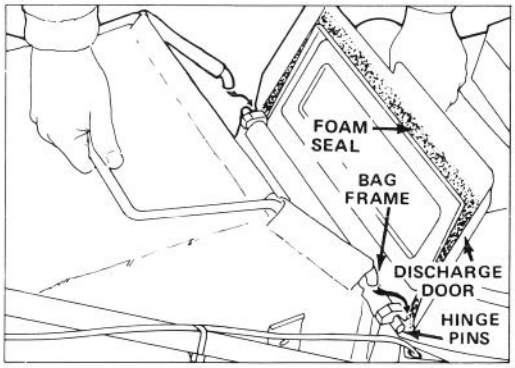

Figure 11

⚠ WARNING

Never open chute door on mower when engine is running because grass clippings and other debris discharges with enough force to cause injury.

The grass bag material will catch and contain the majority of foreign objects, such as small stones and other similar debris. The bag material, however, is subject to normal wear and deterioration. So check the bag frequently, and if it is defective, install a new genuine TORO replacement bag that has this or similar warning.

OPERATING INSTRUCTIONS

4. REMOVING BAG – Stop engine and wait for all moving parts to stop. For protection, always keep hands and feet away from mower housing when engine is running. Open discharge door. While holding discharge door, grasp handle on grass bag and lift bag off mower. Allow discharge door to close.

5. EMPTYING BAG – Grasp bag frame handle and rear of grass bag. Gradually raise front of bag while shaking bag to empty.

NOTE: If grass bag is overfilled, some clippings may remain in discharge opening when bag is removed. Normally, these clippings will be blown into grass bag when the bag is reinstalled and the blade is engaged. If the discharge opening remains plugged, be sure to stop engine and wait for all moving parts to stop, before attempting to clear any clippings from the mower.

ADJUSTING HEIGHT-OF-CUT

Three numbers cast into the housing represent the height-of-cut setting. The diamond between each number represent ½" increments.

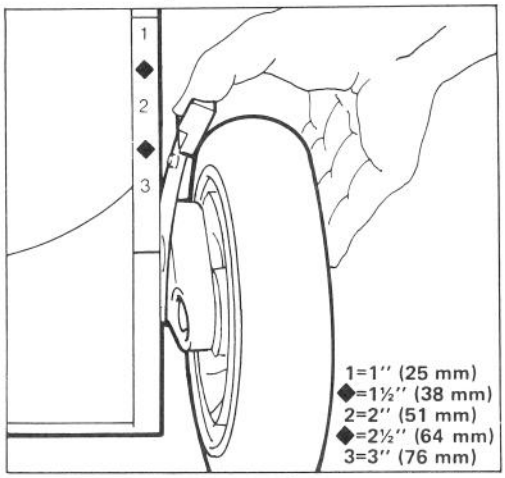

Figure 12

1. Stop the engine.

DANGER
Do not adjust the height-of-cut settings when engine is running.

2. For easier adjustment, lift housing up so wheel is off ground. Do not place hands under the deck to lift housing. Squeeze adjusting lever toward wheel and move them to desired setting (Fig. 12). Assure pin on adjusting lever engages notch in housing. Adjust all wheels to the same setting.

Note: Front wheels can be adjusted to 1/2 inch. Move adjusting lever past "1" and release pin into notch in housing.

3. In conditions when maximum power is required or when cutting in spongy thatch causing rear wheels to sink in turf, raise rear wheel setting one increment higher. Make sure wheel settings are returned to equal settings, when cutting in normal conditions, to assure the best quality of cut is achieved.

CHECK CONTROL BAR OPERATION

Control bar should be checked periodically, at the beginning of each mowing season as a minimum, to assure the Blade Brake Clutch (BBC) system is operating properly.

1. Start engine; refer to Starting, page 5.

2. Push the control bar down to the lowest position (Fig. 13). This 'latches' the mechanism prior to engaging the blade.

3. Lift the control bar to the normal "blade engaged" position, about 2" below the handle. The "fan" noise and bag inflation indicate that the mower blade is engaged and rotating.

4. Release the control bar. A "bang" should be heard, and the blade should stop within 3 seconds. If the blade does not stop within 3 seconds when the control bar is released, stop using it until it has been serviced by an Authorized TORO Service Dealer.

If your unit stops within the required 3 seconds, the BBC system is operating properly. However, to detect BBC system deterioration before it affects normal operation, proceed to step 5.

5. Start engine if not already running.

6. Push the control bar down to its lowest position, latching the mechanism (Fig. 14).

7. Slowly lift the control bar to a point where the bag just begins to inflate (about 5" below the handle) (Fig. 13). This indicates that the mower blade is engaged and has begun to rotate.

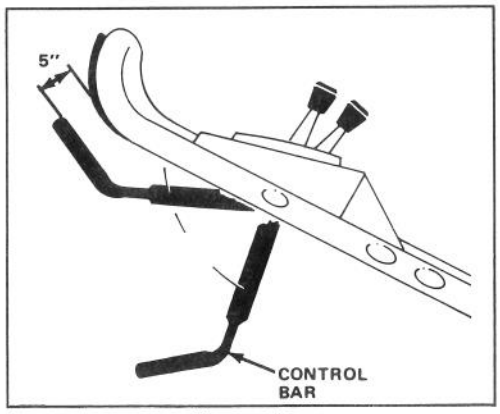

Figure 13

OPERATING INSTRUCTIONS

Note: This intermediate position is not the "natural" operating position of the control bar. However, it has proven to be useful in early detection of latent BBC sticking which could create an unsafe condition later in the life of the mower.

8. Release the control bar.

Note: If a "bang" is heard and the bag immediately deflates, the control bar had been raised too far. Repeat steps 6, 7 & 8, but do not raise the control bar as high as in step 7.

If the control bar "hangs up" and the blade does not stop quickly, it indicates possible deterioration has set in which could result in an unsafe operating condition. Have mower inspected by an Authorized TORO Service Dealer.

CAUTION: If the control bar "hangs up", and the blade does not stop quickly, you should stop the blade before shutting off the engine. This can be done by raising the control bar to the normal operating position and releasing it.

MAINTENANCE

⚠ CAUTION

Pull wire off spark plug before performing adjustments or maintenance.

SERVICING AIR CLEANER

Normally, clean air cleaner after every 25 operating hours. More frequent cleaning is required when mower is operated in dusty or dirty conditions.

1. Stop engine and pull wire off spark plug.

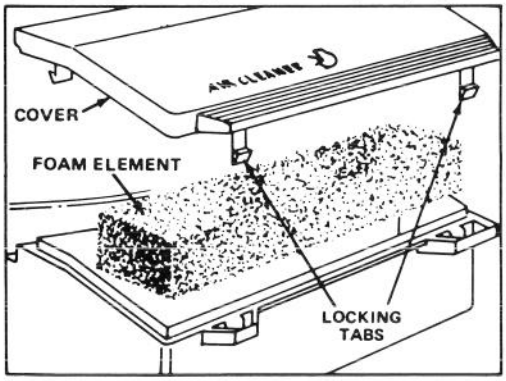

Figure 14

2. Push in locking tabs and lift off air cleaner cover. Clean cover thoroughly (Fig. 14).
3. If top of foam element is dirty, remove it from air cleaner body (Fig. 14). Clean thoroughly.

A. WASH foam element in a solution of liquid soap and warm water. Squeeze to remove dirt, but do not twist because foam may tear. Rinse thoroughly in clear water.

B. DRY by wrapping in a clean rag. Squeeze rag and foam element to dry.

C. SATURATE element with approximately 3 ounces (90 ml) of SAE 30 engine oil. Squeeze element to remove excess oil and to distribute oil thoroughly. A damp element is desirable.

4. Reinstall foam element and air cleaner cover.

IMPORTANT: Do not operate engine without air cleaner element because extreme engine wear and damage will likely result.

REPLACING SPARK PLUG

Use an NGK BPR6ES spark plug or equivalent. Correct air gap is 0.032" (0.813 mm). Remove plug after every 25 operating hours and check its condition.

1. Stop engine and pull wire off spark plug.
2. Clean around spark plug and remove plug from cylinder head.

IMPORTANT: Replace a cracked, fouled or dirty spark plug. Do not sand blast, scrape or clean electrodes because engine damage could result from grit entering cylinder.

3. Set air gap at 0.032" (0.813 mm) (Fig. 15). Install correctly gapped spark plug and gasket seal. Tighten plug firmly to 15 ft-lb (20.4 N-m).

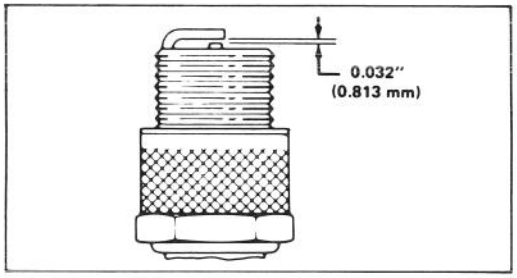

Figure 15

MAINTENANCE

DRAINING GASOLINE

1. Stop engine and pull wire off spark plug.
2. Remove cap from fuel tank and use pump-type syphon to drain fuel into clean gas can.

Note: This is the only procedure recommended for draining fuel.

ADJUSTING THROTTLE

Throttle control adjustment may be required if engine does not start or stop. Whenever a new throttle control cable is installed, throttle must be adjusted.

1. Stop engine and pull wire off spark plug.
2. Close door on mower housing and remove grass bag.
3. Move throttle control to FAST (Fig. 8).
4. Loosen cable clamp screw until throttle cable slides (Fig. 16). Align holes in throttle lever and throttle bracket. Pull throttle cable slightly to remove any slack and tighten cable clamp screw to lock adjustment in place.

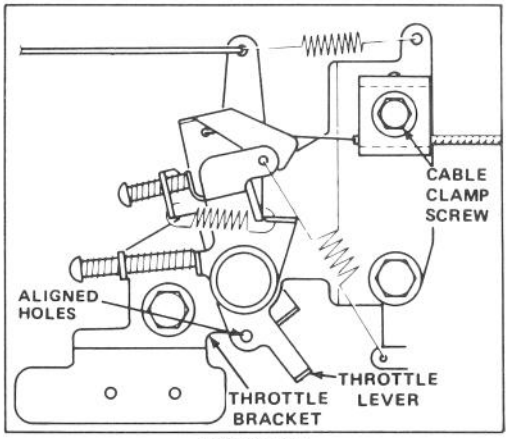

Figure 16

CHANGING CRANKCASE OIL

Change oil after the first 2 operating hours and after every 25 hours thereafter. Since warm oil drains better and carries more contaminants than cold oil, run engine for a minute or so before draining oil.

1. Stop engine and pull wire off spark plug.
2. Remove grass bag. Drain gasoline from fuel tank; refer to Draining Gasoline, page 9.
3. Raise left side of mower at least 12 inches. Remove drain plug using a 14mm wrench. Insert oil drain tube over drain opening (Fig. 17).
4. Place a drain pan at left side of mower. Lower mower allowing oil to drain into pan. Raise right side of mower until all oil has flowed into drain pan.

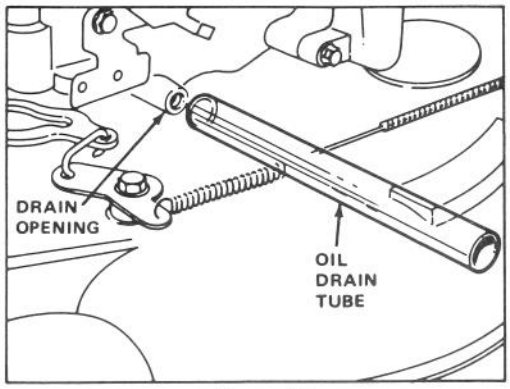

Figure 17

5. After draining, install drain pan and fill engine with fresh oil; refer to Fill Crankcase With Oil, page 4.

ADJUSTING WHEEL DRIVE

If mower does not self-propel or has a tendency to creep forward when drive is not engaged, an adjustment to the wheel traction control cable is necessary.

1. Stop engine and pull wire off spark plug.
2. Lift control bar until some resistance is felt. Control bar should be 1½" from handle when properly adjusted (Fig. 18).

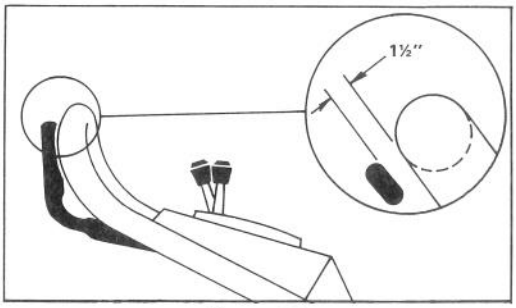

Figure 18

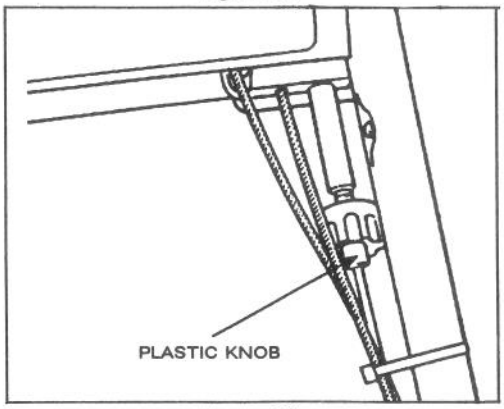

Figure 19

MAINTENANCE

3. To adjust wheel drive cable, rotate knob under left front of control panel (Fig. 19). Rotate knob in positive (+) direction to increase distance between control bar and handle. Turn knob in negative (-) direction to decrease distance between control bar and handle.

4. Repeat steps 2 and 3 until properly adjusted.

INSPECTING/REMOVING/SHARPENING BLADE

1. Stop engine and pull wire off spark plug.

2. Drain gasoline from fuel tank: refer to Draining Gasoline, page 9.

3. Tip mower on its right side (Fig. 20).

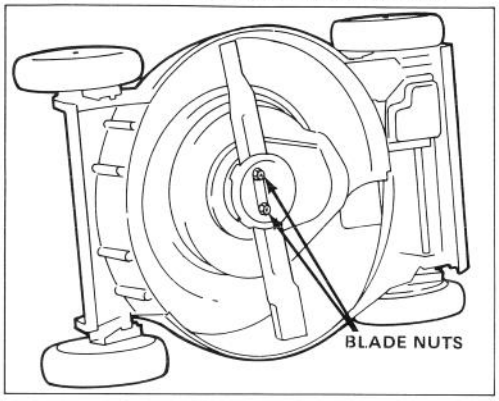

Figure 20

4. INSPECTING BLADE – Carefully examine blade for sharpness and wear, especially where flat and curved parts meet (Fig. 21A). Since sand and abrasive material can wear away the metal that connects the flat and curved parts of the blade, check blade before using the mower. If a slot or wear is noticed (Fig. 21B & C), replace blade. Refer to step 5.

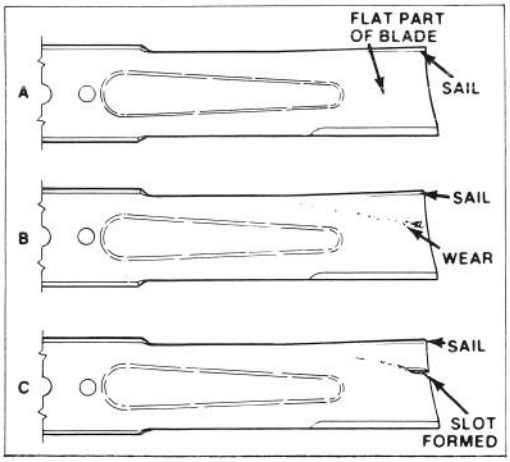

Figure 21

5. REMOVING BLADE – Grasp end of blade using a rag or thickly padded glove. Remove blade nuts, anti-scalp cup, blade, blade spacer and rotating screen (Fig. 20 & 22).

Note: For optimum performance, install new blade before cutting season begins. During the year file down small nicks to maintain the cutting edge.

CAUTION

If blade is allowed to wear, a slot may form near the sail. Eventually a piece of blade may break off resulting in serious injury to yourself or a bystander.

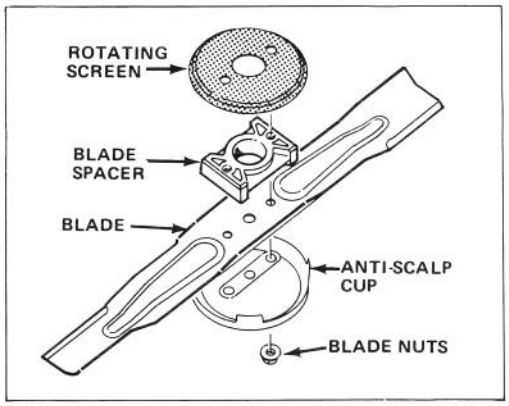

Figure 22

6. SHARPENING BLADE – Using a file, sharpen top side of blade and maintain original cutting angle (Fig. 23). The blade will remain balanced if same amount of material is removed from both cutting edges.

IMPORTANT: Check balance of blade by putting it on a blade balancer. An inexpensive balancer can be purchased at a hardware store. A balanced blade will stay in horizontal position and an unbalanced blade will settle to the heavy side. If blade is not balanced, file more metal off cutting edge on heavy end of blade.

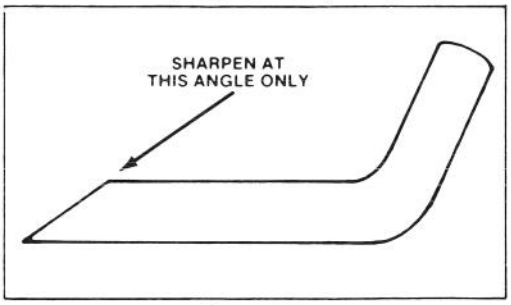

Figure 23

7. Install rotating screen (outside flange pointing away from housing), blade spacer, sharp, balanced blade and anti-scalp cup with blade nuts. Sail part of blade must point toward top of mower housing to assure correct installation.

Tighten the blade nuts to 15-27 ft-lb. (20-37 N-m).

LUBRICATION

After every 25 operating hours or when season ends, front and rear wheels must be lubricated.

1. Apply 2 or 3 drops of light oil on inside and outside of all wheel bolts. Spin wheels to distribute oil into bushings. Wipe up excess oil.

2. Move rear wheel height-of-cut levers to "2" setting. Wipe grease fittings with clean rag (Fig. 24). Install grease gun onto fitting and gently apply 2 or 3 pumps of #2 Multi-Purpose Lithium Base Grease.

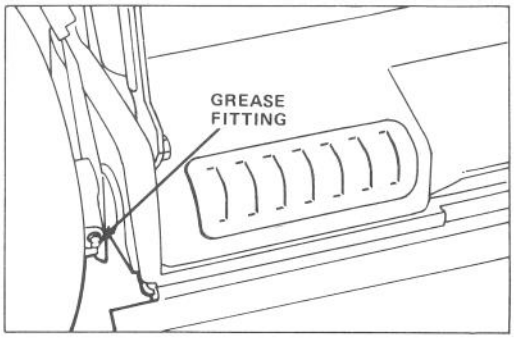

Figure 24

ADJUSTING BLADE BRAKE

Blade brake adjustment may be necessary if the quality of cut deteriorates, the bagging ability degrades, or the engine rpm is audibly faster than the blade rpm when cutting grass.

1. Stop engine. Pull wire off spark plug.

2. Remove (2) screws securing screen panel to top of mower housing (Fig. 25). Remove panel.

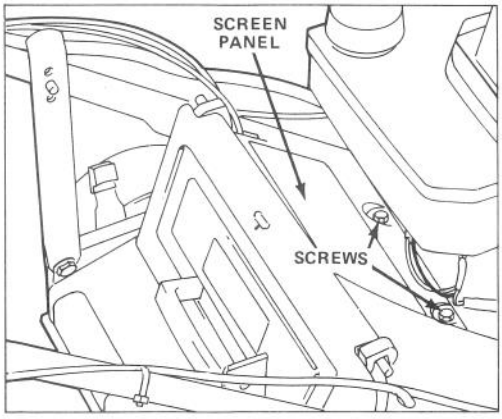

Figure 25

Note: For easier access to panel screen screws, remove (2) self-tapping screws from gas tank and move gas tank out of the way.

3. Move control bar down and lift up against handle. With control bar against handle, measure the spring length (L) at the front of the spring, as shown in Figure 26.

4. If spring dimension is greater than 1¼" or less than 1", an adjustment is needed.

5. To adjust, rotate plastic fitting on blade brake cable (Fig. 26) until spring dimension is as near as possible to but not less than 1". (See following note.)

Note: If the spring cannot be adjusted to less than 1¼" before the end of the plastic fitting is reached, the clutch belt is worn out and should be replaced. After replacing belt, adjust cable as explained in the above procedure.

6. Reinstall screen panel.

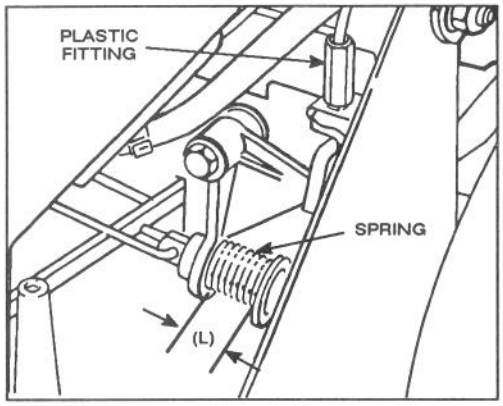

Figure 26

CLEANING BLADE BRAKE CLUTCH SHIELDS

The BBC (Blade Brake Clutch) shield and the area behind the panel screen should be cleaned periodically, at the end of each mowing season at minimum, to assure optimum performance and to prevent parts degradation.

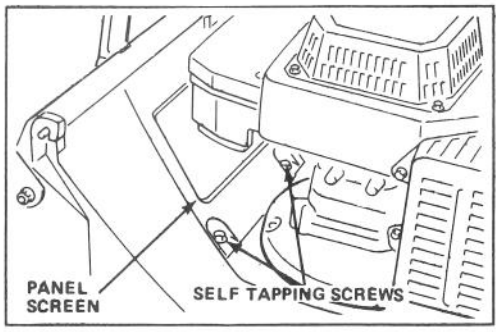

Figure 27

MAINTENANCE

CLEAN BEHIND PANEL SCREEN

1. Stop engine and pull wire off spark plug.
2. Remove (2) ½" self tapping screws securing panel screen to mower deck and remove panel screen (Fig. 27).
3. Remove the vertical panel in front of the transmission by pulling straight up (Fig. 28).
4. Remove any debris that may have accumulated in area behind panel (Fig. 29).
5. Reinstall vertical panel. Secure panel screen to mower deck with (2) ½" self tapping screws.
6. Reinstall spark plug wire.

CLEANING BLADE BRAKE CLUTCH SHIELD

1. Stop engine and pull wire off spark plug.
2. Drain gasoline from fuel tank; refer to Draining Gasoline, page 9.

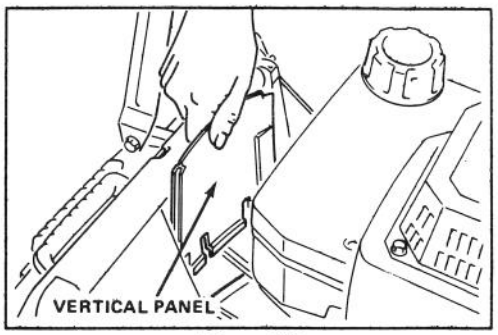

Figure 28

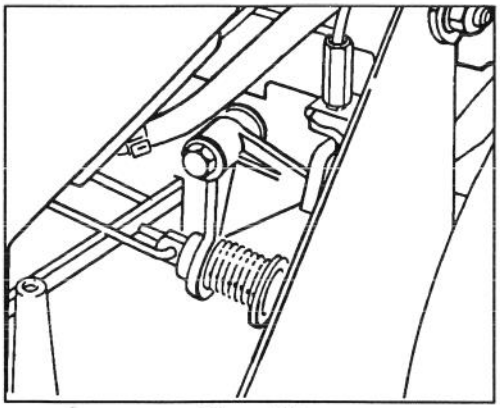

Figure 29

3. Tip mower on its right side.
4. Remove (2) blade nuts, anti-scalp cup, blade, blade spacer, rotating screen, and (4) bolts securing BBC shield to mower deck (Fig. 30 & 31).
5. Brush or scrape debris from inside of shield.
6. Reinstall BBC shield using (4) bolts, rotating screen (outside of flange pointing away from housing), blade spacer, blade, anti-scalp cup, and

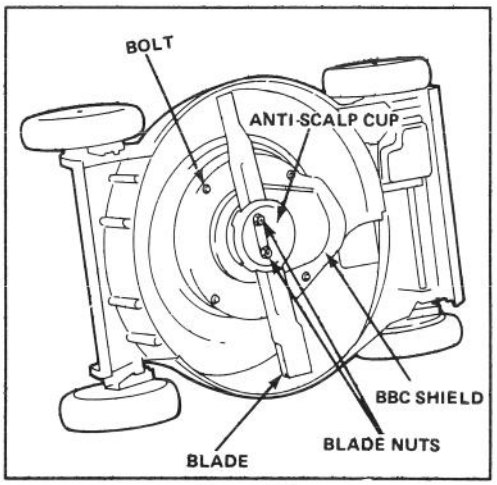

Figure 30

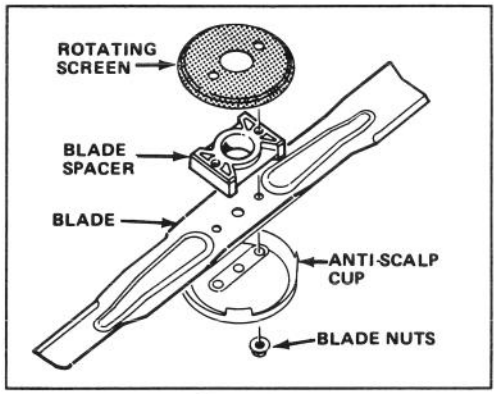

Figure 31

(2) blade nuts. Sail part of blade must point toward top of mower housing. Tighten blade nuts to 15-27 ft-lb. (20-37 N-m).
7. Reinstall spark plug wire.

CLEANING MOWER HOUSING

To assure optimum performance, keep underside of mower housing and inside of discharge area clean.

1. Stop engine and pull wire off spark plug.
2. Drain gasoline from fuel tank: refer to Draining Gasoline, page 9.
3. Tip mower on its right side (Fig. 32). Avoid rotating blade because starting problems may result.
4. Remove dirt and grass clippings that stick to housing by spraying it with a garden hose. Scrape out remaining debris with hardwood scraper. Avoid burrs and sharp edges.

5. Clean discharge door and hinges of grass or debris that may impair operation of door. Use caution when cleaning door so you do not damage foam seal.

6. Remove screen panel on mower housing and clean around blade brake mechanism (Fig. 33).

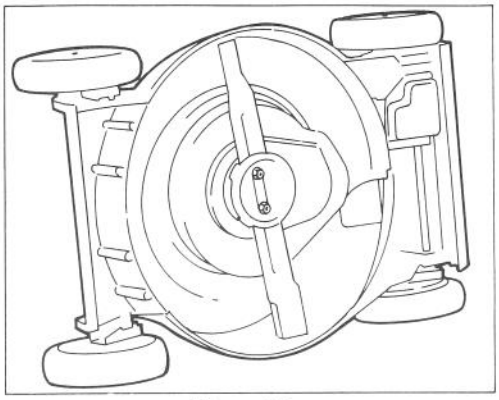

Figure 32

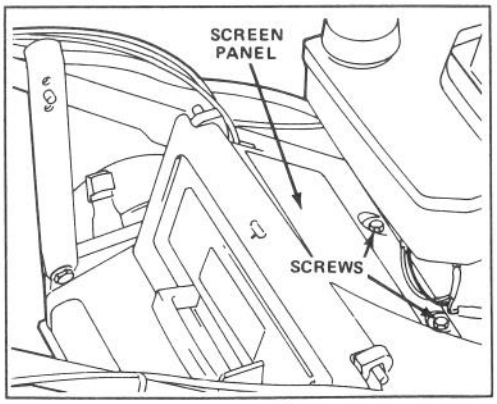

Figure 33

PREPARING MOWER FOR STORAGE

1. For long term storage, either drain gasoline from fuel tank or use a fuel additive before storing. To drain gasoline, refer to Draining Gasoline, page 9. After fuel is drained, start engine and let it idle until all fuel is consumed and engine stops. Repeat the starting procedure two more times to assure all gas is removed from the engine. If gasoline is not drained, gumlike varnish deposits will form and cause poor engine operation, even starting problems.

Fuel can be left in gas tank only if a fuel additive, such as Toro's Stabilizer/Conditioner, is added to gasoline before storing. Toro's Stabilizer/Conditioner is a petroleum distillate based conditioner/stabilizer. Toro does not recommend stabilizers with an alcohol base, such as ethanol, methanol or isopropyl. Use fuel additive in recommended quantities as specified on container.

Under normal conditions, fuel additives remain effective in fuel 6-8 months.

2. Drain oil: refer to Changing Crankcase Oil, page 9. After oil is drained, do not fill crankcase with oil until the following steps (3-11) are completed.

3. Remove spark plug and pour 2 tablespoons of SAE 30 oil into hole in cylinder. Pull starter rope slowly to coat inside of cylinder. Install spark plug and tighten to 15 ft-lb. (20.4 N-m). DO NOT INSTALL WIRE ON SPARK PLUG.

4. Clean underside of housing: refer to Cleaning Mower Housing, page 12.

5. Check condition of blade: refer to Inspecting/Removing/Sharpening Blade, page 10.

6. Tighten all nuts, bolts and screws.

7. Clean dirt and chaff from cylinder, cylinder head fins and blower housing. Also remove grass clippings, dirt and grime from external parts of the engine, shrouding and top of mower housing.

8. Clean air cleaner: refer to Servicing Air Cleaner, page 8.

9. Lubricate the wheels: refer to Lubrication, page 11.

10. Clean BBC shields: refer to Cleaning Blade Brake Clutch Shields, page 11.

11. Touch up all rusted or chipped paint surfaces. Toro Re-Kote paint is available from an Authorized TORO Service Dealer.

12. Fill crankcase with oil: refer to Fill Crankcase With Oil, page 4.

13. Store mower in a clean dry place. Cover mower to keep it clean and protected.

OPTIONAL SPARK ARRESTOR — PART #56-6730

If a spark arrestor is required because of local, state or federal regulations, it may be purchased at your local Authorized TORO Service Dealer. If mower is operated on any California forest, brush or grass covered land without a properly operating spark arrestor, the operator is violating state law, Section 4442 Public Resources Code.

PRODUCT IDENTIFICATION

A model number and a serial number decal is located on bottom right hand side of control panel. Always refer to specific numbers on this decal in correspondence or when replacement parts are needed.

TORO SERVICE SUPPORT

If help — concerning safety, set-up, operation and maintenance or troubleshooting — is ever needed, contact the local Authorized TORO Service Dealer or Distributor. Refer to the "Yellow Pages" for assistance. In addition to skilled service technicians, the dealer and distributor have factory approved accessories and replacement parts. Keep your Toro all TORO. Buy genuine TORO replacement parts and accessories.

MAINTENANCE RECORD

Date	Hours Used						