FORM NO. 3314-539 Rev. A

TORO®

MODEL NO. 30148 — 10001
THRU 20001 & UP

OPERATOR'S MANUAL

48" RECYCLER® DECK

FOR COMMERCIAL WALK MOWER

TORO
THIS UNIT CONFORMS TO ANSI B71.4 - 1984

To assure maximum safety, optimum performance, and to gain knowledge of the product, it is essential that you or any other operator of the mower read and understand the contents of this manual before the engine is ever started. Pay particular attention to the SAFETY INSTRUCTIONS highlighted by this symbol —



The safety alert symbol means CAUTION, WARNING or DANGER — personal safety instruction. Failure to comply with the instruction may result in personal injury.

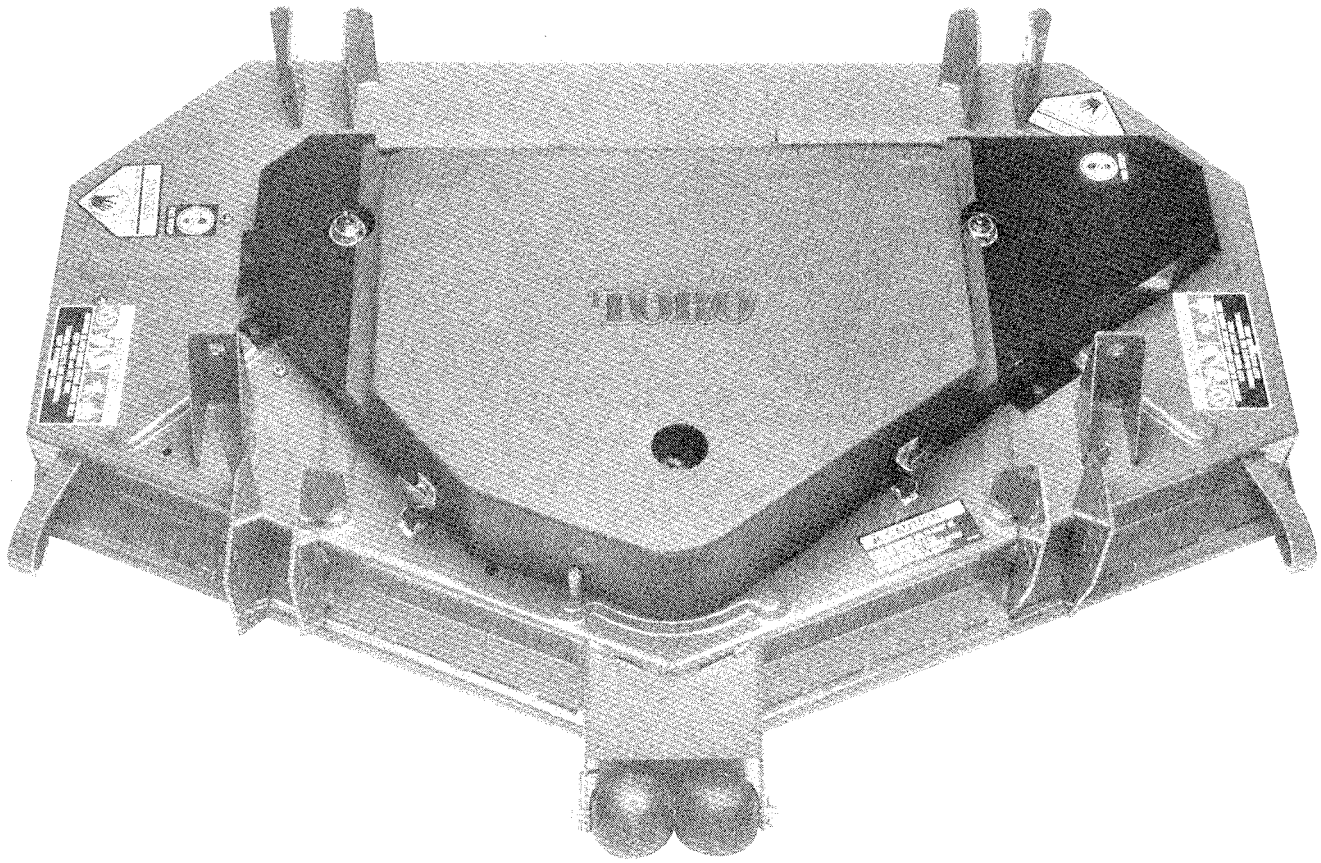

FOREWORD

The 48" Recycler® deck has advanced concepts in engineering, design and safety; and if maintained properly, will give excellent service.

Since it is a high-quality product, Toro is concerned about the future use of the machine and safety of the user. Therefore, read this manual to familiarize yourself with proper set-up, operation and maintenance instructions. The major sections of the manual are:

1. Safety Instructions
2. Set-up Instructions
3. Before Operating
4. Lubrication
5. Maintenance

Certain information in this manual is emphasized. DANGER, WARNING and CAUTION identify personal safety-related information. IMPORTANT identifies mechanical information demanding special attention. Be sure to read this directive because it deals with the possibility of damaging a part or parts of the machine. NOTE identifies general information worthy of special attention.

TABLE OF CONTENTS

	Page
SAFETY INSTRUCTIONS	2-3
SAFETY AND INSTRUCTION DECALS	4
SPECIFICATIONS	4
LOOSE PARTS	5
SET-UP INSTRUCTIONS	5-6
Install Castor Wheels	5
Mount Carrier Frame to Traction Frame	5
Install Drive Belt	6
BEFORE OPERATING	6
Adjusting Height-of-Cut	6
OPERATING INSTRUCTIONS	7
Operating Tips	7
LUBRICATION MAINTENANCE	7
Grease Bearings and Bushings	7
CUTTING UNIT MAINTENANCE	8-13
Troubleshooting	8
Servicing Bushings in Castor Arms	8
Servicing Castor Wheel and Bearing	9
Checking for Bent Blade	9
Removing Cutter Blade	9
Checking Sail and Sharpening Cutter Blade	10
Correcting Cutting Unit Mismatch	10
Adjusting Idler Pulley	11
Replacing Drive Belt	11
Replacing Spindle Pulley	12
IDENTIFICATION AND ORDERING	13
MAINTENANCE RECORD	14-15
THE TORO PROMISE	16

SAFETY INSTRUCTIONS



This safety alert symbol means CAUTION, WARNING or DANGER — "personal safety instruction". Read and understand the instruction because it has to do with safety. Failure to comply with the instruction may result in personal injury.

Improper use or maintenance of the machine can result in injury. To reduce the potential for injury, comply with the following safety instructions.

BEFORE OPERATING

1. Read and understand the contents of this Operator's Manual before operating the machine. Become familiar with all controls and know how to stop quickly. A free replacement manual is available by sending complete Model and Serial Number to:

The Toro Company
8111 Lyndale Avenue South
Minneapolis, Minnesota 55420

2. Do not allow children to operate the machine. Do not allow adults to operate the machine without proper instruction.

3. Before attempting to start engine, shift into neutral, move deck engagement switch into DISENGAGE position and lock parking brake, if equipped with brake.

4. Remove all debris or other objects that might be picked up and thrown by the cutter blades. Keep all bystanders away from the mowing area.

5. Keep all shields and safety devices in place. If a shield, safety device or decal is defective or damaged, repair or replace it before operation is commenced. Also tighten any loose nuts, bolts and screws to assure machine is in safe operating condition.

©The Toro Company — 1991

SAFETY INSTRUCTIONS

6. Do not operate machine while wearing sandals, tennis shoes, sneakers or shorts. Also, do not wear loose fitting clothing which could get caught in moving parts. Always wear long pants and substantial shoes. Wearing safety glasses, safety shoes and a helmet is advisable and required by some local ordinances and insurance regulations.

7. Fill fuel tank with gasoline before starting the engine. Avoid spilling gasoline. Since gasoline is flammable, handle it carefully.

A. Use an approved gasoline container.

B. Do not fill tank while engine is hot or running.

C. Do not smoke while handling gasoline.

D. Fill fuel tank outdoors and up to about one inch (25 mm) from top of the tank, not the filler neck.

E. Wipe up any spilled gasoline.

8. Start engine when parking brake is set (if equipped with brake), blade is disengaged, and transmission is in neutral.

WHILE OPERATING

9. Do not run the engine in a confined area without adequate ventilation. Exhaust fumes are hazardous and could possibly be deadly.

10. Using the machine demands attention, and to prevent loss of control:

A. Mow only in daylight or when there is good artificial light.

B. Watch for holes or other hidden hazards.

C. Do not drive close to a sand trap, ditch, creek or other hazard.

D. Reduce speed when making sharp turns and when turning on hillsides.

11. If the cutting unit discharge area ever plugs, shut engine off before removing the obstruction.

12. Never raise the cutting unit while the blades are rotating.

13. If the cutting blades strike a solid object or the machine vibrates abnormally, shut engine off. Remove high tension wire from spark plug to prevent possibility of accidental starting. Check cutting unit and traction unit for damage and defective parts. Repair any damage before restarting the engine and operating the cutting unit. Be sure blades are in good condition and blade bolts are tight.

14. Cut grass slopes carefully. Do not start, stop, or turn suddenly.

15. Do not touch engine or muffler while engine is running or soon after it is stopped. These areas could be hot enough to cause a burn.

16. Before leaving the operator's position — behind handle or leaving mower unattended, shift transmission into NEUTRAL, apply parking brake (if so equipped), move deck engagement switch to OFF, and shut OFF engine.

MAINTENANCE

17. Disconnect high tension wire from spark plug to prevent accidental starting of the engine when servicing, adjusting or storing the machine.

18. If tractor and mower must be tipped to perform maintenance or an adjustment, drain gasoline from fuel tank and oil from crankcase.

19. When driving unit forward, always use upper "Forward" traction drive handle. When backing up, always use lower "Reverse" traction drive handle. (If equipped with upper and lower traction drive handles).

20. Perform only those maintenance instructions described in this manual. If major repairs are ever needed or assistance is desired, contact an Authorized Toro Distributor.

21. To reduce potential fire hazard, keep the engine free of excessive grease, grass, leaves and accumulations of dirt.

22. Be sure machine is in safe operating condition by keeping nuts, bolts and screws tight. Check the blade mounting bolts and nuts frequently to be sure they are tightened to specification.

23. If the engine must be running to perform a maintenance adjustment, keep hands, feet, clothing and other parts of the body away from the cutting unit blades and other moving parts.

24. Do not overspeed the engine by changing governor settings. To be sure of safety and accuracy, have an Authorized TORO Distributor check maximum engine speed with a tachometer.

25. Engine must be shut off before checking oil or adding oil to the crankcase.

26. To ensure optimum performance and safety, always purchase genuine TORO replacement parts and accessories to keep the Toro all TORO. NEVER USE "WILL-FIT" REPLACEMENT PARTS AND ACCESSORIES MADE BY OTHER MANUFACTURERS. Look for the TORO logo to assure genuineness. Using unapproved replacment parts and accessories could void the warranty of The Toro Company.

SAFETY AND INSTRUCTION DECALS

The following decals are installed on the machine. If any become damaged or illegible, replace it. The decal part number is listed in your parts catalog. Replacement can be ordered from your Authorized Toro Distributor.

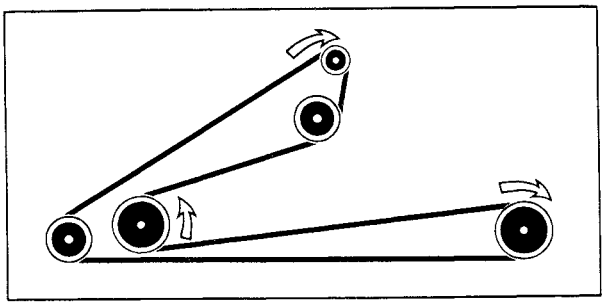

CENTER OF MOWER DECK
(Part No. 72-7760)

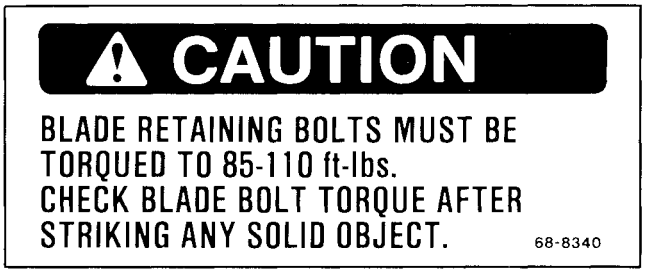

ON LEFT SIDE OF CUTTING UNIT
(Part No. 68-8340)

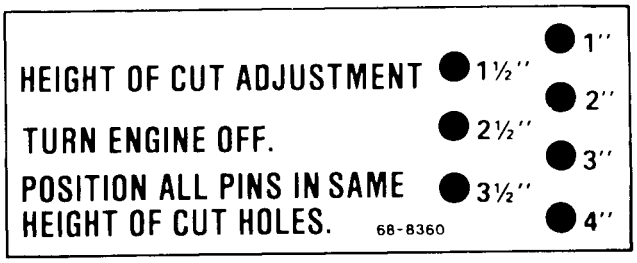

ON BOTH SIDES OF CARRIER FRAME
(Part No. 68-8360, L.H.)
(Part No. 74-0940, R.H.)



ON SIDE OF CUTTING UNIT
(Part No. 72-7890)

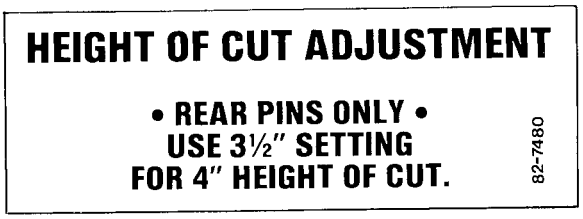

ON BOTH SIDES OF CARRIER FRAME
(Part No. 82-7480)



UNDER CUTTING UNIT COVER
(Part No. 67-5360)



ON LEFT SIDE OF
CUTTING UNIT
(Part No. 43-8480)

SPECIFICATIONS

CUTTING UNIT

Width of Cut: 48 in. (1.22 m).

Height-of-Cut: Adjustable from 1" to 4" (25 to 102 mm) in 1/2" (13 mm) increments.

Cutter Blades: Three heat treated steel blades, (2) 23 in. long and (1) 10-1/2 in. long.

Pneumatic Wheels: 8 in. (203 mm) dia. with greaseable roller bearings. (Inflation 10-15 P.S.I.)

LOOSE PARTS

Note: Use this chart as a checklist to assure all parts have been received. Without these parts, total set-up cannot be completed.

DESCRIPTION	QTY.	USE
Flange Screws — 1/2-13 x 1" lg. Flange Locknuts Capscrews — 3/8-16 x 1-3/4" lg. Locknuts Capscrews — 3/8-16 x 7/8" lg. Lockwashers Shims	6 6 4 4 4 4 2	Mount carrier frame to traction frame.
Castor Wheel Assembly Thrust Washer Lynch Pins Frame	2 8 2 1	Install in frame. Install on castor fork shafts. Install on top of castor shafts. Install on traction unit.
Adjusting Shaft Jam Nuts Washer Spring Bushing	2 4 2 2 2	Mount Adjusting Shafts
Operator's Manual Registration Card	1 1	

Specifications and design subject to change without notice.

SET-UP INSTRUCTIONS

INSTALL CASTOR WHEELS

1. Place two thrust washers on each castor wheel shaft (Fig. 1).

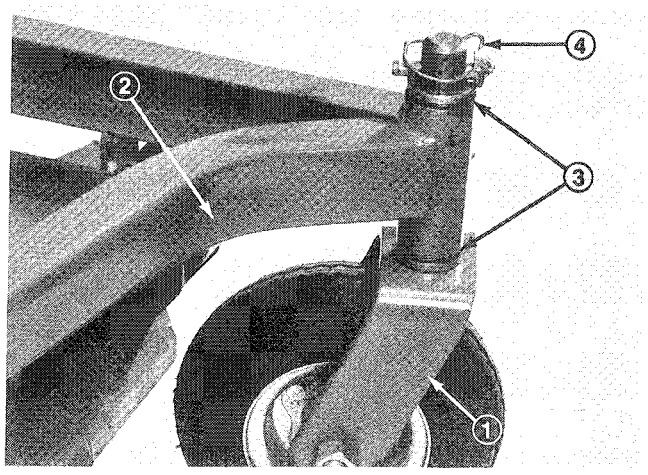

Figure 1

1. Castor wheel assembly 3. Thrust washers
2. Frame 4. Lynch pin

2. Insert shafts into carrier frame. Install two more thrust washers and secure with Lynch Pin (Fig. 1).

MOUNT CARRIER FRAME TO TRACTION FRAME

1. Align left and right angle bracket mounting holes with mounting holes in traction frame. Secure each bracket with three flange screws and locknuts (Fig. 2). Mount bottom flange screws with locknuts to the outside. Torque fasteners to 60-80 ft.-lb. (81-109 N·m).

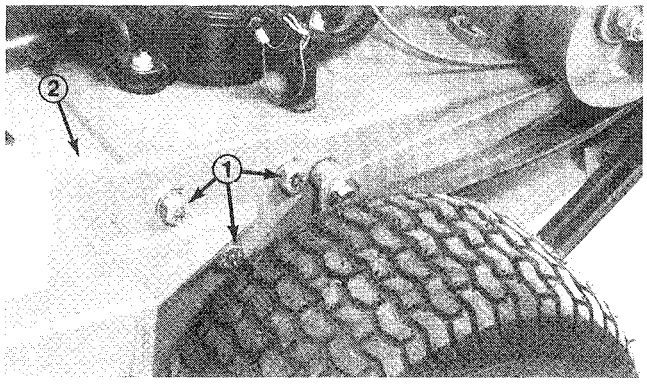

Figure 2

1. Flange screws and nuts
2. Angle bracket

2. Align carrier frame mounting holes with mounting holes in angle brackets, while positioning shim on angle bracket and aligning mounting holes (Fig. 3).

3. Secure each side with (2) 3/8-16 x 1-3/4" lg. capscrews and locknuts. Locknuts must be positioned outside carrier frame.

4. Secure top of each carrier frame and shim to angle brackets with (2) 3/8-16 x 7/8" lg. capscrews and lockwashers. Torque fasteners to 240-320 in. lb.

SET-UP INSTRUCTIONS

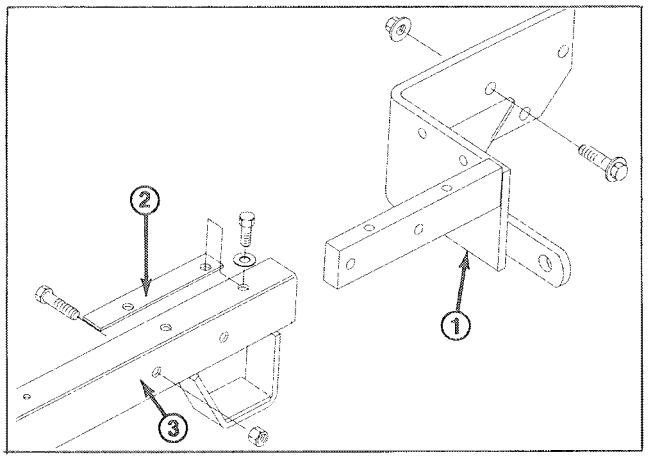

Figure 3

1. Angle bracket 2. Shim 3. Carrier frame

INSTALL DRIVE BELT

Note: To ease the installation of drive belt, belt cover may be removed.

1. Route belt around deck drive pulley and engine clutch pulley (Fig. 3).

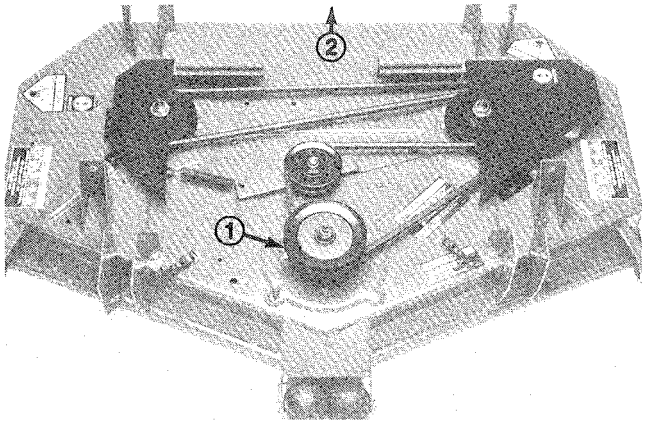

Figure 4

1. Drive pulley 2. Clutch pulley (not shown)

2. Thread (2) jam nuts onto each adjusting shaft (approximately 7 inches) (Fig. 5).

3. Slide a washer, spring and bushing onto each adjusting shaft. Bushing to be positioned so flange end is against spring (Fig. 5).

4. Insert spring end of each adjusting shaft into hole in deck mounting bracket and other end of shaft into hole in carrier frame mounting tab. Small end of bushing to fit into hole in deck bracket (Fig. 5).

5. To tension belt, tighten front jam nut on each adjusting shaft until springs are compressed to a length of 5", measured between washer and bushing (Fig. 5). Secure rear jam nuts.

6. Check position of belt guides. Guides should be positioned so rod edge is approximately .10 inch from back side of belts.

7. Reinstall cover if previously removed.

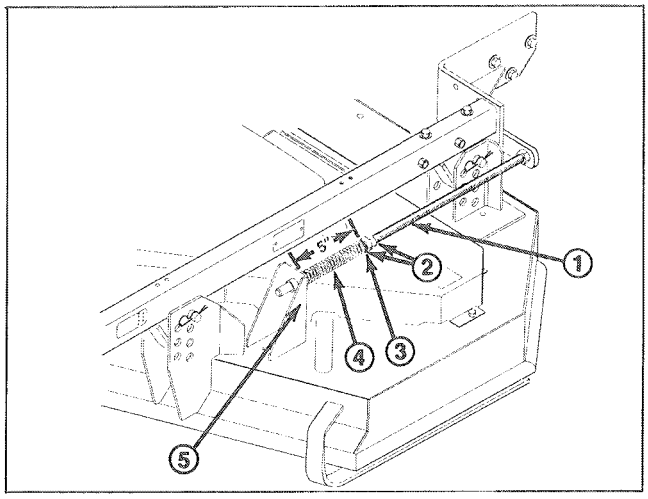

Figure 5

1. Adjusting shaft 2. Jam nuts 3. Washer 4. Spring 5. Bushing

BEFORE OPERATING

ADJUSTING HEIGHT-OF-CUT

The height-of-cut is adjustable from 1 to 4 inches (25 to 102 mm) in 1/2 inch (13 mm) increments by relocating four clevis pins in different hole locations in brackets at each corner of the cutting unit (Fig. 5).

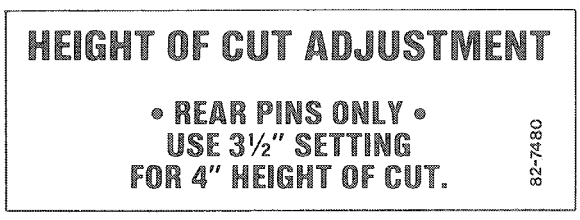

Note: Pins on opposite sides should be in identical hole locations to prevent any operating and cutting difficulties.

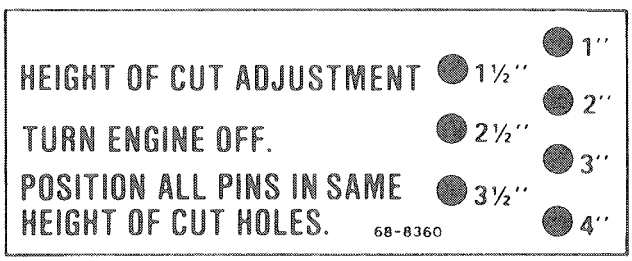

OPERATING INSTRUCTIONS

OPERATING TIPS

1. MOW WHEN GRASS IS DRY — Mow either in the late morning to avoid the dew or in late afternoon to avoid the damage that can be caused by direct sunlight on the sensitive, freshly mowed grass.

2. SELECT THE PROPER HEIGHT-OF-CUT SETTING TO SUIT CONDITIONS — Remove approximately one inch or no more than one third of the grass blade when cutting. In exceptionally lush and dense grass you may have to raise your height-of-cut setting another notch.

3. MOWING IN EXTREME CONDITIONS — Air is required to recut grass clippings in mower housing, so do not set height-of-cut to low or totally surround housing by uncut grass. Always try to have one side of the mower housing free from uncut grass, allowing air to be drawn into housing. When making an initial cut thru center of uncut area, operate machine slower and back up if mower starts to clog.

4. STOPPING — If forward motion has to be stopped while cutting, a clump of grass clippings may be deposited on lawn. Follow this procedure for stopping while cutting:

A. With deck engaged, move onto a previously cut area.

B. Raise deck slightly, while driving forward.

C. Shift to neutral, move throttle control lever to slow position, and rotate ignition key to off.

5. MOW AT PROPER INTERVALS — Under most normal conditions you'll need to mow approximately every 4-5 days. But remember, grass grows at different rates at different times. This means that in order to maintain the same height-of-cut, which is good practice, you'll need to cut more frequently in early spring, perhaps every 4 or 5 days; as the grass growth rate slows in mid summer, only every 8-10 days. If you are unable to mow for an extended period due to weather conditions, or other reasons, mow first with the height-of-cut at a high level; then mow again 2-3 days later with a lower height setting.

6. ALWAYS MOW WITH SHARP BLADES — A sharp blade cuts cleanly and without tearing or shredding the grass blades like a dull blade. Tearing and shredding will cause the grass to turn brown at the edges which will impair growth and increase susceptibility to diseases.

7. AFTER OPERATING — To assure optimum performance, clean underside of mower housing, especially around inserts (kickers) after each use. If residue is allowed to build up in mower housing and on inserts, recycler performance will decrease.

LUBRICATION MAINTENANCE

GREASE BEARINGS AND BUSHINGS

The cutting unit must be lubricated regularly. If machine is operated under normal conditions, lubricate castor bearings, bushings, and blade spindle bearings with No. 2 general purpose lithium grease or molybdenum base grease, after every 8 hours of operation or daily, whichever comes first (Fig. 6).

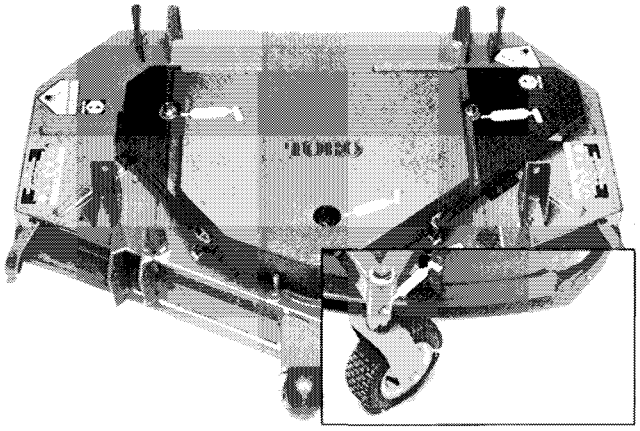

Figure 6

CUTTING UNIT MAINTENANCE TROUBLESHOOTING

UNIT WILL NOT CUT OR CUTS POORLY

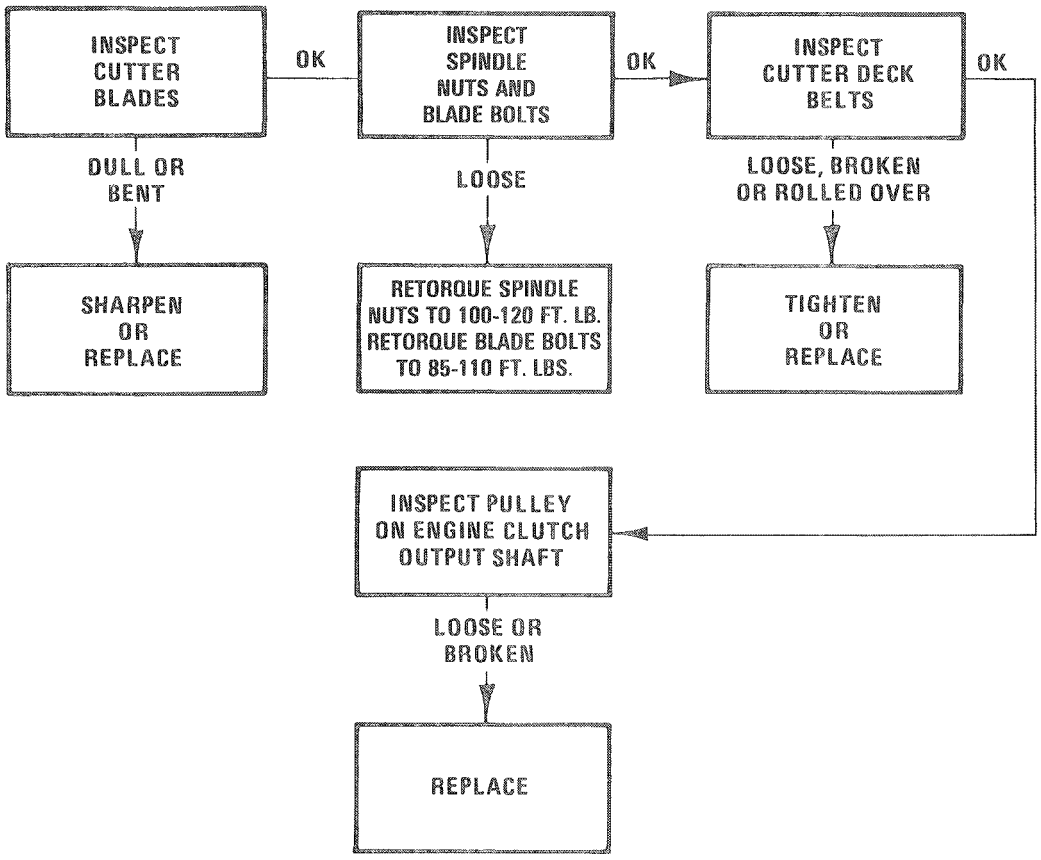

CUTTING UNIT MAINTENANCE

SERVICING BUSHINGS IN CASTOR ARMS

The castor arms have bushings pressed into the top and bottom portion of the tube and after many hours of operation, the bushings will wear. To check the bushings, move castor fork back and forth and from side-to-side. If castor spindle is loose inside the bushings, bushings are worn and must be replaced.

1. Raise cutting unit so wheels are off floor and block it so it cannot fall accidentally.

2. Remove lynch pin and thrust washers from top of castor spindle.

3. Pull castor spindle out of mounting tube. Allow thrust washers to remain on bottom of spindle.

4. Insert pin punch into top or bottom of mounting tube and drive bushing out of tube (Fig. 7). Also drive other bushing out of tube. Clean inside of tubes to remove dirt.

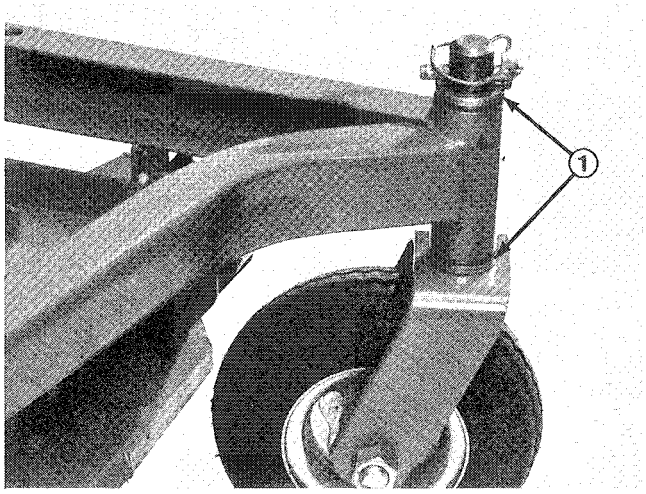

Figure 7

1. Bushings

5. Apply grease to inside and outside of new bushings. Using a hammer and flat plate, drive bushings into mounting tube.

6. Inspect castor spindle for wear and replace it if damaged.

7. Push castor spindle through bushings and mounting tube. Slide spacers onto spindle. Install lynch pin through castor spindle to retain all parts in place.

IMPORTANT: When bushings are installed, the inside diameter may collapse slightly, and this may not allow castor spindle to be installed. If castor spindle does not slide through new bushings and mounting tube, ream both bushings to inside diameter of 1.126 inches (28.6 mm).

SERVICING CASTOR WHEEL AND BEARING

The castor wheel rotates on a high-quality roller bearing and is supported by a spanner bushing. Even after many hours of use, provided that the bearing was kept well-lubricated, bearing wear will be minimal. However, failure to keep bearing lubricated will cause rapid wear. A wobbly castor wheel usually indicates a worn bearing.

1. Remove locknut from capscrew holding castor wheel assembly between castor fork (Fig. 8). Grasp castor wheel and slide capscrew out of fork.

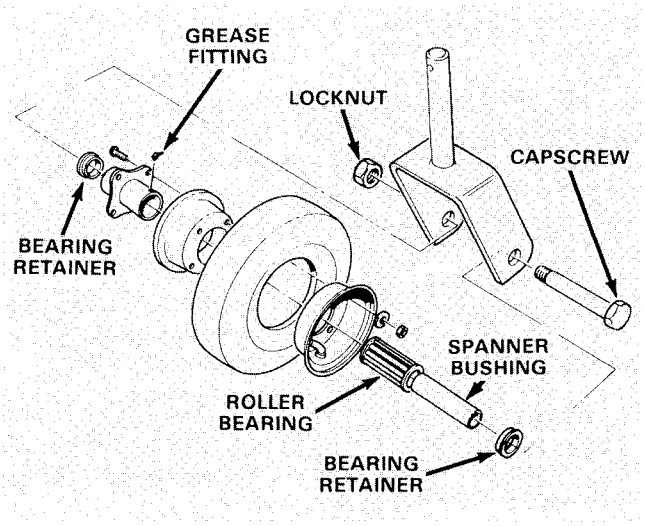

Figure 8

Note: Account for the two bearing retainers (Fig. 8).

2. Tip wheel to the side and allow roller bearing and spanner bushing to fall out (Fig. 8).

3. Inspect bearing, spanner bushing and inside diameter of wheel for wear. Replace defective parts.

4. To reassemble parts, slide spanner bushing through roller bearing. Pack bearing with no. 2 grease; then insert bearing w/spanner bushing into wheel.

5. Slide bearing retainer onto spanner bushing, and mount castor wheel assembly between the fork and capscrew and locknut. Tighten capscrew and locknut until spanner bushing bottoms against inside of castor fork.

6. Pump more grease through grease fitting on wheel (Fig. 8) until bearing is greased thoroughly.

CHECKING FOR BENT BLADE

1. Rotate blade until the ends face forward and backward (Fig. 9). Measure from inside of cutting unit to cutting edge at front of blade (Fig. 9), and remember this dimension.

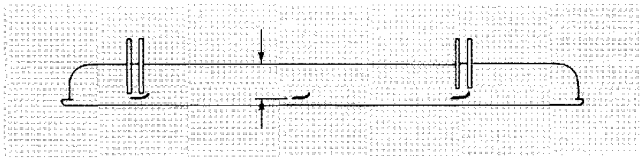

Figure 9

2. Rotate opposite end of blade forward. Measure between the cutting unit and cutting edge of blade at the same position as in step 1. The difference between dimensions obtained in steps 1 and 2 must not exceed 1/8 of an inch (3 mm). If dimension exceeds 1/8 of an inch (3 mm), replace the blade because it is bent: refer to Removing Cutter Blade, page 9.

REMOVING CUTTER BLADE

The blade must be replaced if a solid object is hit, the blade is out-of-balance or if the blade is bent. Always use genuine TORO replacement blades to be sure of safety and optimum performance. Never use replacement blades made by other manufacturers because they could be dangerous.

WARNING

Do not try to straighten a blade that is bent, and never weld a broken or cracked blade. Always use a new blade to assure safety.

1. Grasp end of blade using a rag or thickly padded glove. Remove blade bolt, lockwasher, anti-scalp cup, and blade from spindle shaft.

2. Install blade — sail facing toward cutting unit with blade bolt, lockwasher and flat washer. Tighten to 85-110 ft-lb (115-148 N·m).

CUTTING UNIT MAINTENANCE

CHECKING SAIL AND SHARPENING CUTTER BLADE

Two areas must be considered when checking and servicing the cutter blade: one area is the sail, the other is the cutting edge. Both cutting edges and the sail, which is the turned up metal opposite the cutting edge, contribute to a good quality-of-cut. The sail is important because it pulls grass up straight, thereby producing an even cut. However, the sail will gradually wear down during operation, and this condition is normal. As the sail wears down, the quality-of-cut will degrade somewhat, although the cutting edges are sharp. The cutting edges of the blade must be sharp so the grass is cut rather than torn. A dull cutting edge is evident when tips of the grass appear brown and shredded. Sharpen the cutting edges to correct this condition.

1. Examine cutting ends of the blade carefully, especially where the flat and curved parts of the blade meet (Fig. 10-1). Since sand and abrasive material can wear away the metal that connects the flat and curved parts of the blade, check the blade before using the mower. If wear is noticed (Fig. 10-2), replace the blade.

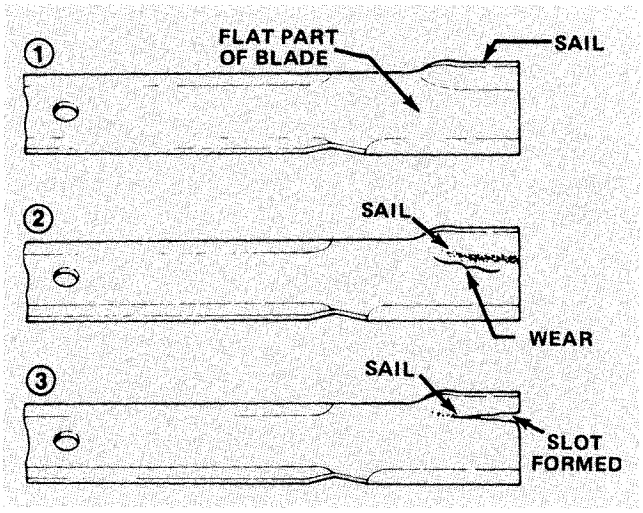

Figure 10

DANGER

If blade is allowed to wear, a slot will form between the sail and flat part of the blade (Fig. 10-3). Eventually a piece of the blade may break off and be thrown from under the housing, possibly resulting in serious injury to yourself or bystander.

2. Inspect cutting edges of all blades. Sharpen the cutting edges if they are dull or nicked. Sharpen only the top of the cutting edge and maintain the original cutting angle to make sure of sharpness (Fig. 11). The blade will remain balanced if same amount of metal is removed from both cutting edges.

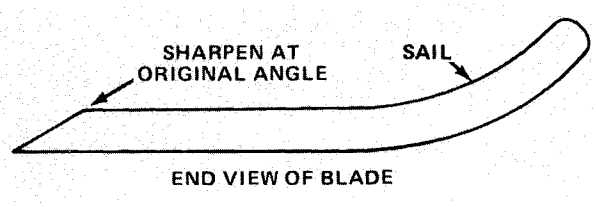

Figure 11

Note: Remove the blades and sharpen them on a grinder: refer to Removing Cutter Blade, steps 1 and 2, page 9. After sharpening the cutting edges, reinstall blade with bladebolt, lockwasher and flatwasher. Blade sails must be on top of blade. Tighten blade bolt to 85-110 ft-lb (115-148 N·m).

CORRECTING CUTTING UNIT MISMATCH

If one cutter blade cuts lower than the others, correct as follows:

1. Check to make sure front height-of-cut pins are resting properly on frame cushions.

2. Raise height-of-cut to the 3½" (89 mm) or 4 in. (102 mm) position: refer to Adjusting Height-Of-Cut, page 6.

3. Rotate blades so tips line up with one another. Tips of the adjacent blades must be within 1/8 in. (3 mm) of each other. If tips are not within 1/8 in. (3 mm) of each other, proceed to step 7 and add shims between spindle housing and bottom of cutting unit.

4. Position all three blades in the "A" position (Fig. 13) and measure from level surface to the bottom of the tip end of each blade (Fig. 13).

5. Note measurement attained at "A", rotate blades to "B" position (Fig. 12), measure distance of all blades to level surface and note dimensions (Fig. 13).

6. Rotate blades to "C" position, measure and note distance measured (Fig. 12, 13).

7. Compare measurements at various positions. All dimensions must be equal within 1/4 in. (6 mm) from one another. The difference between dimensions must not exceed 1/4 in. (6 mm). If difference exceeds 1/4 in. (6 mm), proceed to step 8 and 9 and add shims between spindle housing and bottom of cutting unit.

CUTTING UNIT MAINTENANCE

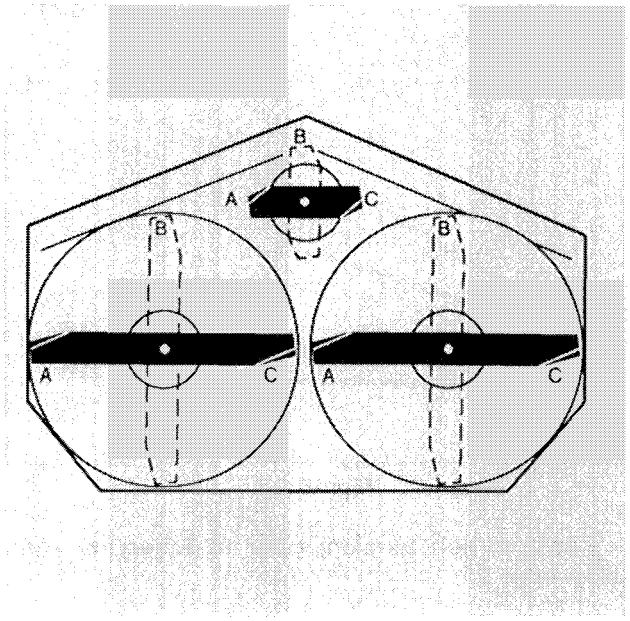

Figure 12

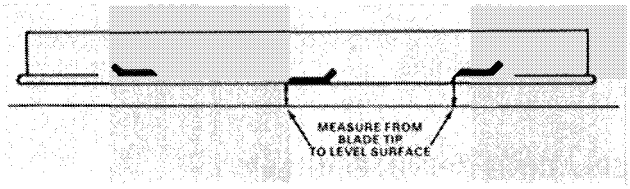

Figure 13

8. Remove capscrews, flatwashers, lockwashers and nuts from outer spindle in the area where shims must be added. To raise or lower the blade, add a shim, Part No. 3256-24, between spindle housing and bottom of cutting unit. Continue checking alignment of blades and adding shims until tips fo blades are within the required dimension.

9. Equalize side to side measurements as follows:

   A. Cutting units usually operated at 1 to 2 in. (25 to 51 mm) height-of-cut should have the low side of the cutting unit raised. Remove the klip ring securing castor wheel on low end (Fig. 14) and remove castor assembly.

   B. Transfer one thrust washer from top side of castor shaft to lower side, install castor assembly and compare blade height of all blades; refer to items 3 through 7. Continue adding thrust washers if height still does not meet requirements.

   C. If cutting unit is operated at 2 to 4 in. (51 to 102 mm) height-of-cut, lower the high side of cutting unit. Remove lynch pin of castor at high end of unit and remove castor assembly.

   D. Transfer one thrust washer from lower side of castor shaft to top side, install assembly and compare blade height of all blades; refer to items 3 through 7. Repeat procedure if height still does not meet requirements.

   E. If height is within specified dimension, install klip ring, set height-of-cut to proper height and resume operation.

ADJUSTING IDLER PULLEY

The idler pulley applies force against the belt so power can be transmitted to the blade pulleys. If the idler is not tensioned against the belt with sufficient force, maximum power will not be transmitted to the pulleys.

1. Remove center and right belt covers.

2. Remove nut securing spring anchor to capscrew in housing (Fig. 14). Lift anchor off capscrew and pull to increase belt tension. Correct belt tension is achieved when approximately 30-40 lbs. of force is applied to spring.

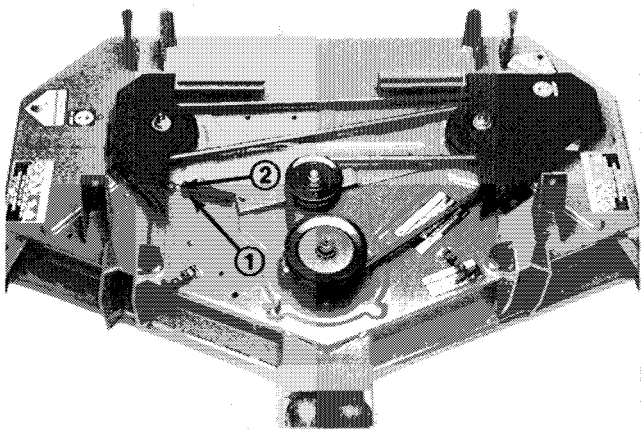

Figure 14

1. Spring anchor 2. Nut

3. Reinstall spring anchor on capscrew in appropriate mounting hole and install nut.

4. Reinstall belt covers.

REPLACING DRIVE BELT

The blade drive belt, tensioned by the spring loaded idler, is very durable. However, after many hours of

use, the belt will show signs of wear. Signs of a worn belt are: squealing when belt is rotating, blades slipping when cutting grass, frayed edges, burn marks and cracks. Replace the belt if any of these conditions are evident.

1. Unhook latches and remove screws securing belt covers to top of cutting unit. Remove covers.

2. Loosen jam nuts on each adjusting shaft and remove engine to deck drive belt (Fig. 15).

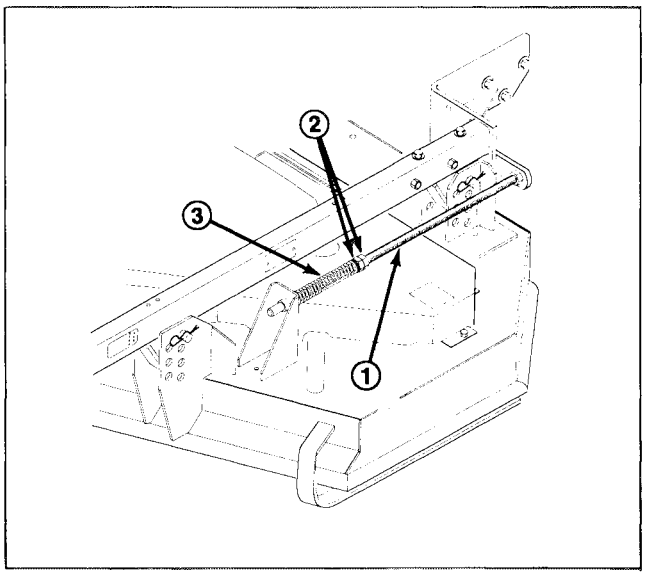

Figure 15

1. Adjusting shaft
2. Jam nuts
3. Spring

3. Remove nut securing spring anchor to capscrew in housing (Fig. 16). Lift anchor off capscrew and allow belt to relax. Remove worn belt.

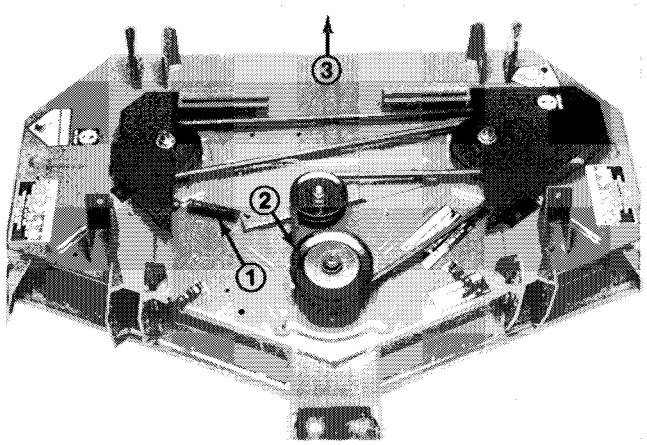

Figure 16

1. Idler spring
2. Drive pulley
3. Clutch pulley (not shown)

4. Install new belt around spindle pulleys and idler pulley (Fig. 17).

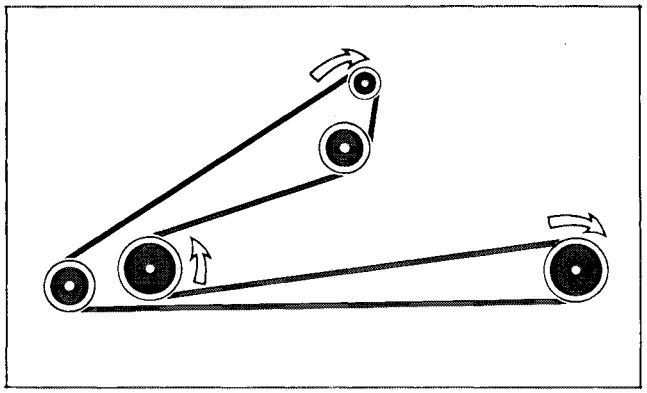

Figure 17

5. Readjust belt tension; refer to Adjusting Idler Pulley, page 11.

6. Reinstall belt covers.

7. Install belt to drive and clutch pulley (Fig. 15).

8. Tighten jam nuts on adjusting shafts until springs are compressed to a length of 5", measured between washer and bushing.

REPLACING SPINDLE PULLEY

1. Remove covers from cutting unit.

2. Remove drive belt, refer to Replacing Drive Belt, page 11.

Note: Hold spindle assembly together or block it up from the bottom of cutting unit when removing nut from pulley, as spindle shaft may slide thru spindle housing.

3. Remove nut retaining pulley on spindle shaft. Pull pulley off shaft.

4. Install new pulley on spindle shaft with locknut. Tighten nut to 100-120 ft-lb (135-162 N·m).

5. Reinstall belts and covers.

IDENTIFICATION AND ORDERING

MODEL AND SERIAL NUMBERS

The cutting unit has two identification numbers: a model number and a serial number. These numbers are stamped into a plate. The cutting unit identification plate is located behind the right front caster wheel. In any correspondence concerning the cutting unit, supply the model and serial numbers to assure correct information and replacement parts are obtained.

To order replacement parts from an authorized TORO Distributor, supply the following information:

1. Model and serial numbers of the cutting unit.

2. Part number, description and quantity of parts desired.

Note: Do not order by reference number if a parts catalog is being used; use the part number.

MAINTENANCE RECORD

Date	Hours Used	Replace Blades	Replace Belt	Caster Arm Bushings	Caster Wheel Bearings	Spindle Bearings		Winter Storage

MAINTENANCE RECORD

Date	Hours Used	Replace Blades	Replace Belt	Caster Arm Bushings	Caster Wheel Bearings	Spindle Bearings		Winter Storage

The Toro Promise

A ONE YEAR LIMITED WARRANTY

The Toro Company promises to repair your TORO Product if defective in materials or workmanship. The following time periods from the date of purchase apply:

Commercial Products . . . . . 1 Year

The cost of parts and labor are included, but the customer pays the transportation costs on walk rotary mowers with cutting unit widths of less than 25".

If you feel your TORO product is defective and wish to rely on The Toro Promise, the following procedure is recommended:

1. Contact your Authorized TORO ProLine Service Dealer (the Yellow Pages of your telephone directory is a good reference source).
2. The TORO ProLine Service Dealer will advise you on the arrangements that can be made to inspect and repair your product.
3. The TORO ProLine Service Dealer will inspect the product and advise you whether the product is defective and, if so, make all repairs necessary to correct the defect without an extra charge to you.

If for any reason you are dissatisfied with the distributor's analysis of the defect or the service performed, you may contact us.

Write:
TORO Consumer Products Service Department
8111 Lyndale Avenue South
Minneapolis, Minnesota 55420

The above remedy of product defects through repair by an Authorized TORO ProLine Service Dealer is the purchaser's sole remedy for any defect.

THERE IS NO OTHER EXPRESS WARRANTY. ALL IMPLIED WARRANTIES OF MERCHANTABILITY AND FITNESS FOR USE ARE LIMITED TO THE DURATION OF THE EXPRESS WARRANTY.

Some states do not allow limitations on how long an implied warranty lasts, so the above limitation may not apply to you.

This Warranty applies only to parts or components which are defective and does not cover repairs necessary due to normal wear, misuse, accidents, or lack or proper maintenance. Regular, routine maintenance of the unit to keep it in proper condition is the responsibility of the owner.

All warranty repairs reimbursable under the Toro Promise must be performed by an Authorized TORO ProLine Service Dealer using Toro approved replacement parts.

Repairs or attempted repairs by anyone other than an Authorized TORO ProLine Service Dealer are not reimbursable under the Toro Promise. In addition, these unauthorized repair attempts may result in additional malfunctions, the correction of which is not covered by warranty.

THE TORO COMPANY IS NOT LIABLE FOR INDIRECT, INCIDENTAL OR CONSEQUENTIAL DAMAGES IN CONNECTION WITH THE USE OF THE PRODUCT INCLUDING ANY COST OR EXPENSE OF PROVIDING SUBSTITUTE EQUIPMENT OR SERVICE DURING PERIODS OF MALFUNCTION OR NON-USE.

Some states do not allow the exclusion or limitation of incidental or consequential damages, so the above limitation or exclusion may not apply to you.

This warranty gives you specific legal rights, and you may also have other rights which vary from state to state.

COUNTRIES OTHER THAN THE UNITED STATES OR CANADA

Customers who have purchased TORO products exported from the United States or Canada should contact their TORO Distributor (Dealer) to obtain guarantee policies for your country, province or state. If for any reason you are dissatisfied with your Distributor's service or have difficulty obtaining guarantee information, contact the TORO importer. If all other remedies fail, you may contact us at The Toro Company.

Compliance with Radio Interference Regulations Certified.
Certifie Conforme au Reglement sur le Brouillage Radioelectrique.

Litho in U.S.A.