FORM NO. 3314-794

TORO

MODEL NO. 38025 - 2000001 & UP

OPERATOR'S MANUAL

1800 POWER CURVE® SNOWTHROWER

SAFETY INSTRUCTIONS

⚠ WARNING

To assure maximum safety, best performance, and to gain knowledge of the product, it is essential that you or any other operator of the snowthrower read and understand the contents of this manual before the motor is ever started. Pay particular attention to the safety alert symbol ⚠ which means CAUTION, WARNING OR DANGER — "personal safety instruction." Read and understand the instruction because it has to do with safety. FAILURE TO COMPLY WITH INSTRUCTION MAY RESULT IN PERSONAL INJURY.

SAVE THESE INSTRUCTIONS FOR FUTURE REFERENCE!

BEFORE OPERATING

1. Read and understand the contents of this manual before operating the snowthrower. Become familiar with all controls and know how to stop quickly.

2. Keep everyone, especially children and pets, away from area of operation. Never allow children to operate snowthrower. Always direct discharge chute away from people.

3. Inspect area thoroughly where snowthrower will be used. Remove doormats, sleds, boards, sticks, wire, and any other foreign objects which might be picked up and thrown by the snowthrower.

4. Keep all shields and safety devices in place. If a shield, safety device or decal is illegible, damaged or lost, repair or replace it before beginning operation. Also, tighten any loose nuts, bolts or screws.

5. Wear adequate winter clothing and rubber boots that will ensure proper footing on slippery surfaces. Do not wear loose-fitting clothing that could possibly get caught in moving parts.

6. Do not use snowthrower on gravel or crushed rock surfaces. Flying debris may cause damage or personal injury.

7. WARNING - To prevent electric shock, use only a U.L. approved extension cord suitable for outdoor use in cold temperatures (16 gauge minimum). Replace a damaged extension cord immediately.

8. To prevent disconnection of snowthrower cord from extension cord during operation, tie extension cord to loop in upper handle before connecting to snowthrower; refer to page 4, Figure 5 for proper procedures.

9. The use of attachments or accessories on this snowthrower may increase the risk of injury.

WHILE OPERATING

10. Keep people and pets a safe distance away from the snowthrower and area of operation.

11. Avoid accidental starting. Don't carry plugged in snowthrower with hand on control bar. Keep away from control bar while plugging in cord.

12. If the extension cord is damaged in any manner while plugged in, remove extension cord from wall receptacle.

13. Do not abuse extension cord. Never carry snowthrower by cord or pull sharply on cord to disconnect from receptacle. Keep cord away from heat, oil, and sharp edges.

14. Always keep extension cord away from rotating parts to prevent damage and electric shock.

15. Operate the snowthrower only when there is good visibility or light. Always maintain secure footing and balance, and keep a firm grip on the handle. **DO NOT USE SNOWTHROWER ON ROOF.**

16. Be attentive when using the snowthrower, and stay alert for holes in the terrain and other hidden hazards.

17. STAY AWAY FROM DISCHARGE OPENING WHILE OPERATING THE SNOWTHROWER. Keep face, hands, feet, and any other part of your body or clothing away from concealed, moving or rotating parts.

©The Toro Company-1991

⚠ SAFETY INSTRUCTIONS

18. Never operate snowthrower near bystanders, glass enclosures, automobiles and trucks, window wells or a drop-off without proper adjustment of the snow discharge angle; refer to page 5, item 2 for correct operating procedure.

19. Clear snow from slopes by going up and down, never across the face. Use caution when changing directions. Never clear snow from steep slopes.

20. Operation of the snowthrower in the hand-held position (wheels off the ground) is unsafe except when used in accordance with special instructions in the Operator's Manual. See page 5, items 5 and 6.

21. When using the secondary handle, always turn chute in the opposite direction from where you are standing.

22. Forcing the chute deflector over the stops will cause snow and debris to spray in the operator's zone.

23. DO NOT OVERLOAD THE SNOWTHROWER BY CLEARING SNOW AT TOO FAST A RATE. LET THE UNIT DO THE WORK.

24. If a solid object is hit or snowthrower vibrates abnormally, stop snowthrower and wait for all movement to stop. Disconnect extension cord and check snowthrower immediately for possible damage, an obstruction, debris in rotor or loose parts. Vibration is generally a sign of trouble. Repair any damage before operating snowthrower again.

25. Before adjusting, cleaning, repairing or inspecting the snowthrower, or before unclogging the discharge chute, stop snowthrower by releasing the control bar and wait for all moving parts to stop. Also, disconnect cord from receptacle to prevent accidental starting.

26. When through using snowthrower, let it run for a few minutes so ice does not freeze moving parts solid.

27. Disconnect extension cord from cord receptacle, lock, and remove key from handle if snowthrower will be left unattended.

MAINTAINING SNOWTHROWER

28. Perform only those maintenance instructions described in this manual. Disconnect cord from receptacle before performing maintenance procedures to prevent the possibility of accidental starting. If major repairs are ever needed, contact your local Authorized TORO Service Dealer or TORO Service Center for assistance.

29. Keep the snowthrower in safe operating condition by keeping nuts, bolts, and screws tight. Check all fasteners frequently to assure they are tight.

30. Store snowthrower indoors when not in use in a dry, locked-up place out of reach of children. Remove extension cord from snowthrower and store with snowthrower to prevent misplacement. Lock snowthrower and remove key from handle. Store key in a memorable place.

31. At the time of manufacture, the snowthrower conformed to and exceeded safety standards in effect for snowthrowers. Therefore, to assure best performance and safety, purchase genuine TORO replacement parts and accessories to keep the TORO all TORO. **NEVER USE "WILL FIT" REPLACEMENT PARTS AND ACCESSORIES.** The TORO logo assures genuineness.

⚠ SAFETY DECALS

Safety decals and instructions are easily visible to the operator and are located near any area of potential danger. Replace any decal that is damaged or lost.

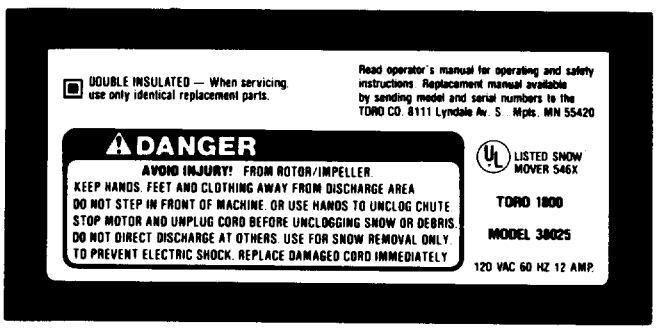

On Rear of Shroud
(Part No. 73-0450)

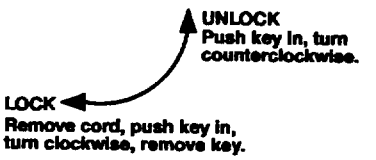

On Handle



On Rear of Shroud
(Part No. 73-0460)

TABLE OF CONTENTS

	Page
Safety Instructions	1
Set-Up Instructions	3
Operating Instructions	4
Maintenance	6
Lubricating Snowthrower	6
Replacing Scraper	6
Replacing Rotor	6
Replacing Belts	7
Storing Snowthrower	9
Toro Service Support	9
Product Identification	9
Maintenance Record	10
The Toro Promise	

SET-UP INSTRUCTIONS

INSTALL UPPER HANDLE AND CHUTE CRANK

Note: Determine left and right hand sides of snowthrower by standing in normal operating position.

1. Stand snowthrower on wheels and position upper handle to prepare for handle assembly. Inspect the open internal wiring. If damaged do not assemble. Contact your TORO Service Dealer.

⚠ CAUTION

Use care so electrical cord will not be damaged during assembly.

2. Carefully insert right side of upper tubing over end of lower right side tubing (Fig. 1).

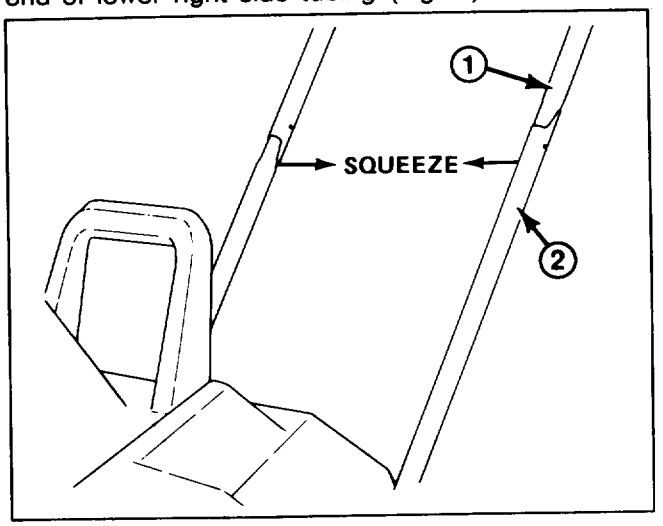

Figure 1

1. Upper tubing
2. Lower tubing

3. Carefully insert left side of upper tubing into end of lower left side tubing (Fig. 1).

4. Squeeze upper tubes together as shown in Figure 1. Wiggle upper tubes down until mounting holes in upper and lower tubing are aligned (Fig. 1).

5. Place the mounting plate over the tubes (Fig. 2). Align mounting plate holes with upper and lower tubing holes.

6. Insert end of chute crank through hole in shroud. Turn chute crank rod lightly until flattened end drops into slot in gear. Firmly push chute crank into gear until it snaps into place (Fig. 2 & 3).

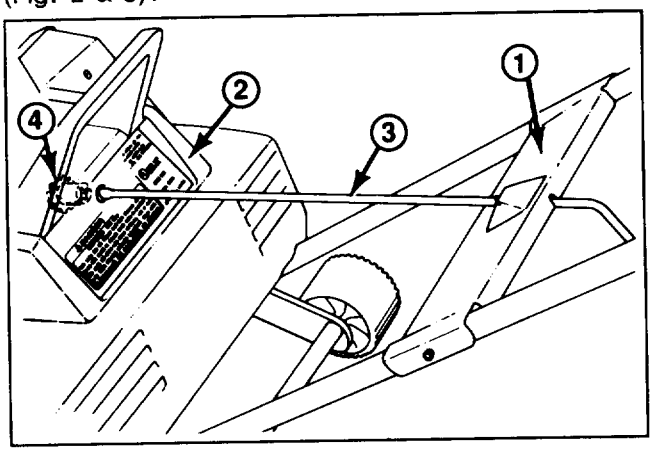

Figure 2

1. Mounting plate
2. Shroud
3. Chute crank
4. Gear

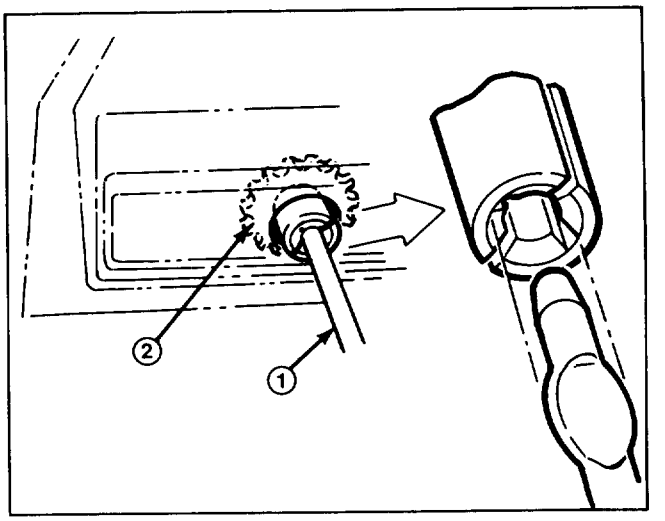

Figure 3

1. Chute crank
2. Chute crank gear

7. Secure upper and lower tubing and mounting plate together with (2) #10-24 NC machine screws and locknuts. Position screw heads on the outside of the mounting plate. **Be careful not to damage the electrical wiring when inserting screws.** If hole is blocked, use a blunt 1/8" punch to carefully route electrical wiring away from aligned holes.

SET-UP INSTRUCTIONS

INSTALL DISCHARGE CHUTE (Fig. 4)

1. Position deflector onto discharge chute, aligning mounting holes. Insert a rubber washer between deflector and discharge chute while maintaining hole alignment.

2. Secure deflector to discharge chute with (2) 5/16–18 UNC carriage bolts, metal washers, and locknuts. Make sure the square shoulders on the carriage bolts align with inside square on discharge chute. Position metal washers to the outside of deflector as shown in Figure 3. DO NOT OVERTIGHTEN BOLTS.

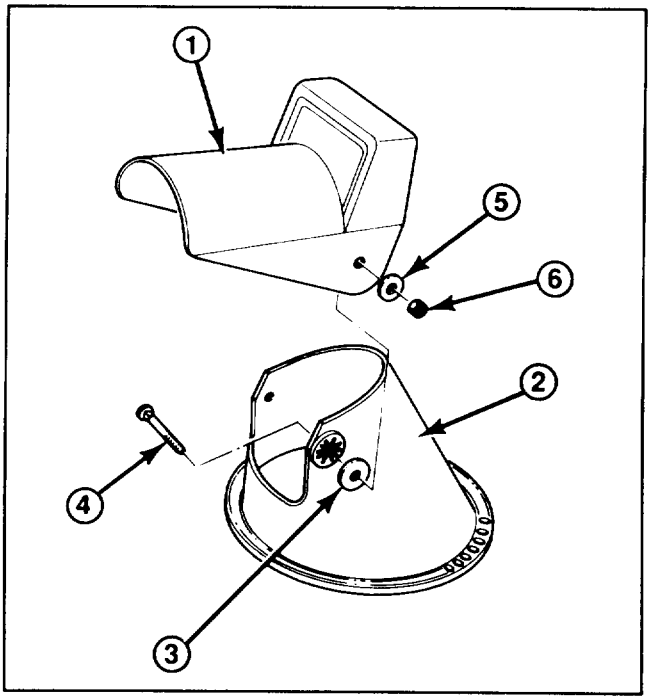

Figure 4

1. Chute deflector
2. Chute
3. Rubber washer
4. Carriage bolt
5. Metal washer
6. Locknut

OPERATING INSTRUCTIONS

BEFORE OPERATING

1. Check the condition of the unit, and make sure the rotor turns freely.

2. Before connecting the extension cord to the snowthrower, tie the extension cord to the loop in the handle as shown in Figure 5. This helps prevent cord separation during operation.

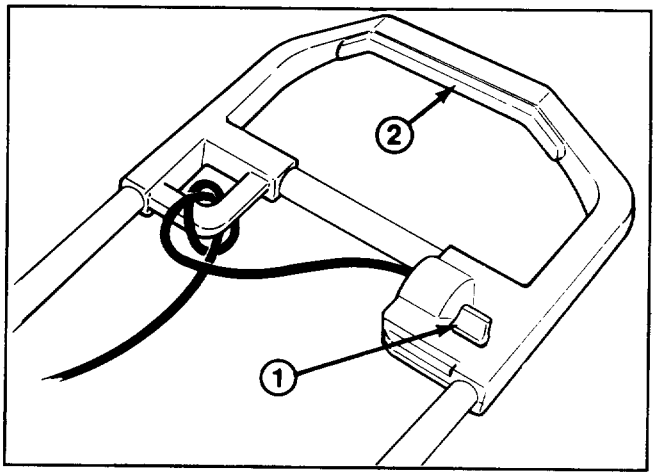

Figure 5

1. Key
2. Control bar

3. To unlock the snowthrower, push key into the hole (Fig. 6). While holding key down, turn key counterclockwise. Interlock tab rotates away from prongs, allowing extension cord to be plugged in (Fig. 6). Do not attempt to remove key when in the unlocked position.

⚠ CAUTION

Due to the electrical efficiency of the Toro 1800 Power Curve® Snowthrower, a 16 gauge U.L. Approved Outdoor Cold Weather extension cord can be used if cord is less than 100 feet in length. If more than 100 feet of extension cord is being used, a 14 gauge U.L. approved cord is recommended for the entire length.

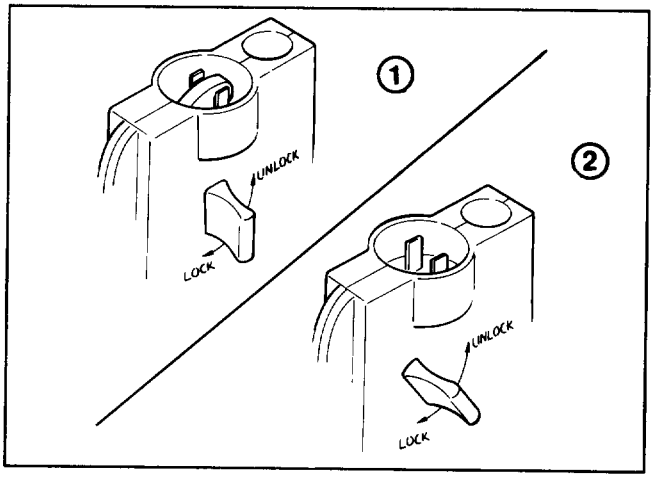

Figure 6

1. Locked position
2. Unlocked position

OPERATING INSTRUCTIONS

NOTE: The interlock tab is a safety device to prevent unauthorized use of snowthrower.

4. Lock snowthrower cord when unit is not being used. Remove cord and push key into hole. While holding key down, turn key clockwise, and remove key(Fig. 6). Store key in a memorable place.

STARTING/STOPPING

To start rotor, squeeze the control bar. To stop rotor, release the control bar (Fig. 5).

OPERATING TIPS

⚠ CAUTION

If an obstruction or foreign object is hit while operating, stop unit by releasing the control bar, unplug extension cord, remove obstruction, and check unit for damage.

1. Keep the area to be cleared free of stones, toys, or other foreign objects which may be picked up and thrown by the rotor blades. Such items could be covered by snowfall and, therefore, unnoticed until struck by the rotor blades. Always be sure to keep children and pets away from area of operation.

2. ADJUSTING DISCHARGE CHUTE—Rotate the chute crank clockwise to move discharge chute to the left and counterclockwise to move chute to the right.

Note: The chute crank makes a noise as you turn the crank. This is normal.

The deflector handle on top of the discharge chute controls the height of the snow stream (Fig. 7).

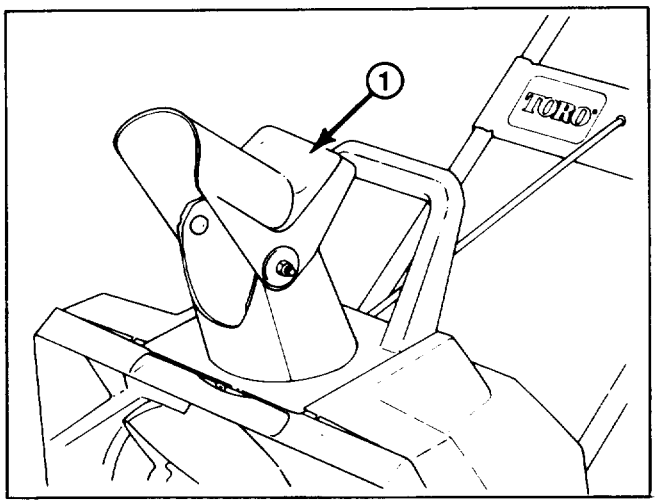

Figure 7

1. Chute deflector handle

⚠ WARNING

Do not force the chute deflector over the stops because snow and anything that may be picked up by snowthrower will fly into the operator's zone. Do not over-tighten deflector mounting nuts so excessive force is required to adjust deflector.

3. Begin snow removal near the electrical outlet and work outward. Blow back and forth, not away and toward outlet.

When turning at the end of a swath, step over the cord and turn the snowthrower.

4. Always overlap each swath and discharge snow downwind when possible.

5. Shave down large banks of snow by placing the snowthrower on the bank. Lift the snowthrower by the primary and secondary handles only (Fig. 8). Let the unit's weight shave down the bank in a back and forth motion.

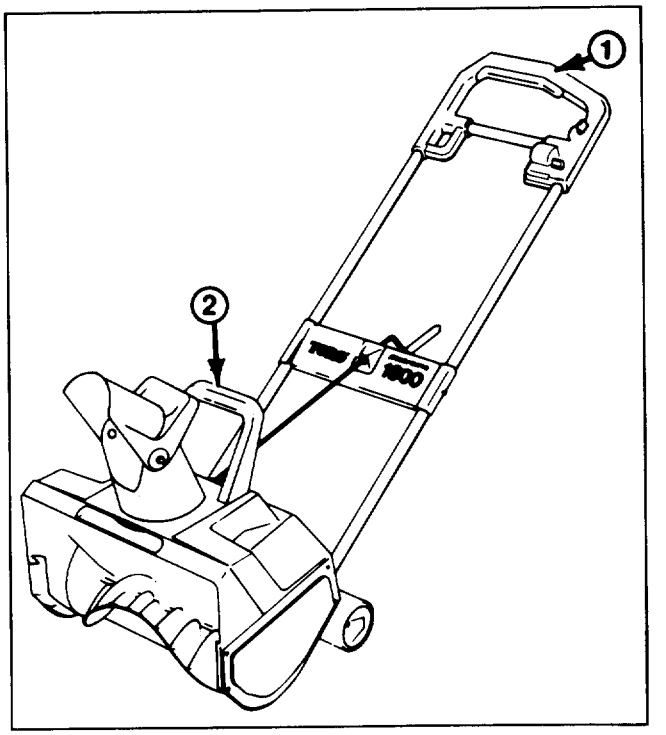

Figure 8

1. Primary handle **2. Secondary handle**

6. When clearing steps or deep drifts, hold the unit by the primary and secondary handles (Fig. 8) and use a swinging or sweeping motion.

⚠ WARNING

When using the secondary handle, always turn the discharge chute in the opposite direction from where you are standing.

OPERATING INSTRUCTIONS

7. Keep extension cord clear of obstructions, sharp objects, and all moving parts. Do not pull sharply on cord or abuse it in any manner. Frequently inspect cord for damage which could result in electric shock. If cord becomes damaged in any way, replace it.

8. In some snow and cold weather conditions, some controls and moving parts may freeze solid. Therefore, when any control becomes hard to operate, stop the motor by releasing the control bar, and check all parts for freeze up. **DO NOT USE EXCESSIVE FORCE WHEN TRYING TO OPERATE THE CONTROLS IF FROZEN.** Free all controls and moving parts before operating.

9. When operating snowthrower, keep snowthrower wheels 1 inch off pavement by tipping unit forward. This helps prevent snow from building up on wheels.

10. AFTER CLEARING SNOW—Let motor run for a few minutes so ice doesn't freeze moving parts solid. After motor is shut off, wipe ice and snow off entire unit. Rotate chute crank several times to clear mechanism of snow.

11. Disconnect the extension cord when through using the snowthrower. Turn the key and insert plug into cord lock to prevent unauthorized use of machine. To release plug for snowthrower use, insert key and turn clockwise. Keep key in a memorable place so it will not be misplaced.

MAINTENANCE

⚠ CAUTION

To prevent accidental operation of the snowthrower while performing maintenance, disconnect extension cord, push extension cord into cord lock, and remove key from handle.

LUBRICATING SNOWTHROWER

The snowthrower does not have to be lubricated as all bearings are lubricated for the life of the product.

REPLACING SCRAPER

A replaceable scraper is located at the bottom of the rotor housing.

1. Remove (2) screws securing scraper to snowthrower.

2. Install new scraper and fasten securely with (2) screws.

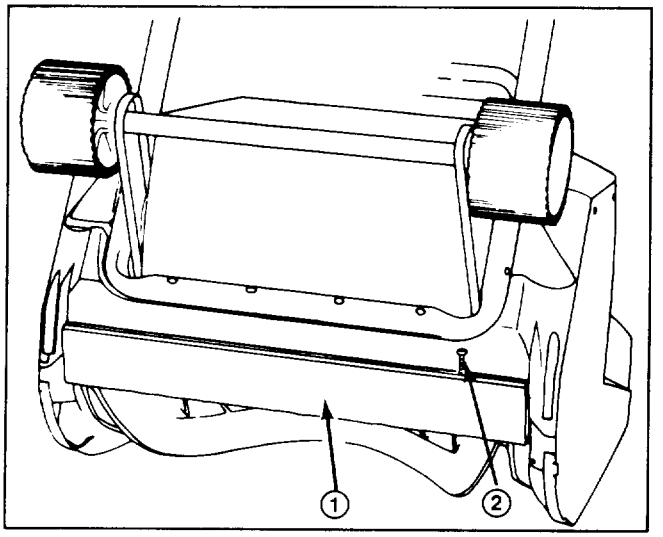

Figure 9

1. Scraper **2. Screw**

REPLACING ROTOR

Note: Determine left and right sides of snowthrower by standing in the normal operating position.

1. Remove (5) screws securing right side cover and skid to snowthrower frame (Fig. 10).

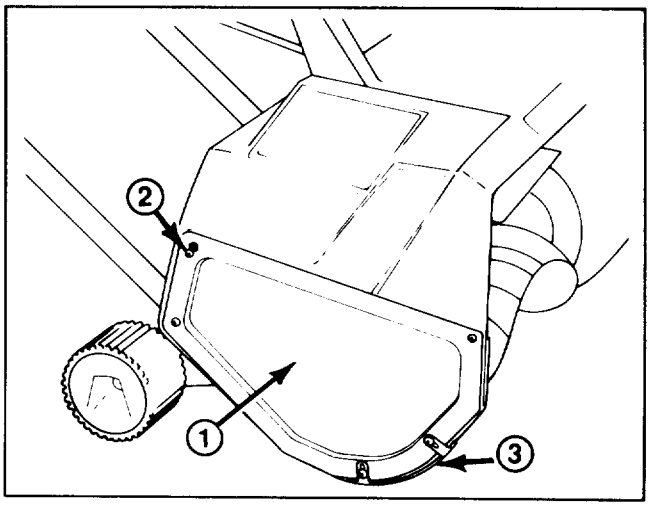

Figure 10

1. Right side cover **2. Screw** **3. Skid**

2. Using a 3/8" Allen wrench, turn the rotor shaft clockwise (left hand thread) while holding the rotor (Fig. 11). The Allen wrench may need to be tapped with a hammer to loosen the rotor shaft. Wedge a stick or hammer handle in rotor to prevent rotation.

Note: If unable to remove rotor shaft by holding rotor, remove left side cover and skid (Fig. 12) and hold hex nut with 7/8" wrench while unscrewing rotor shaft (Fig. 13).

3. Hold rotor and pull out rotor shaft.

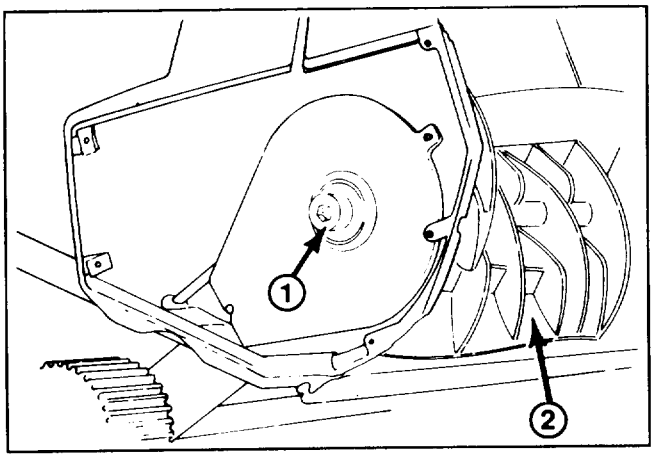

Figure 11

1. Rotor shaft 2. Rotor

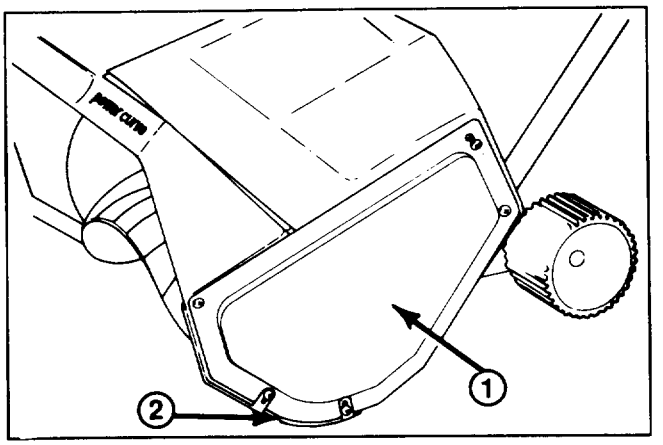

Figure 12

1. Left side cover 2. Skid

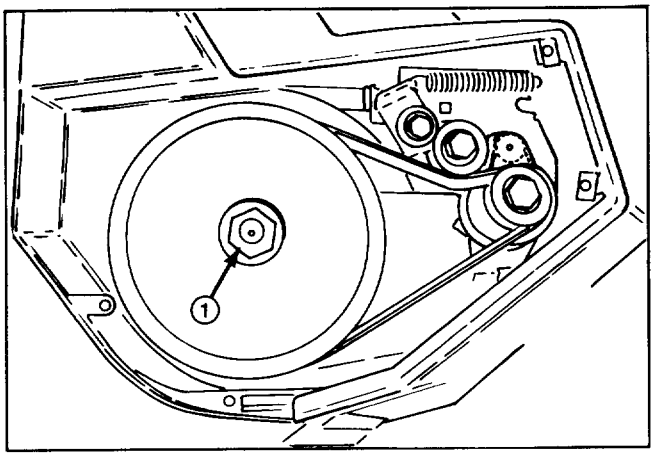

Figure 13

1. Hex nut

4. Remove rotor. Retain washer on right side of rotor for reassembly. Replace washer if worn.

5. If necessary, insert a new washer into right side of new rotor.

6. Align left side of new rotor with coupler. The 3 bosses on rotor end must align with slots on coupler (Fig. 14). When mounting coupler to drive hex, coupler tabs must be aligned to inside. Slide right side of rotor into mounting position.

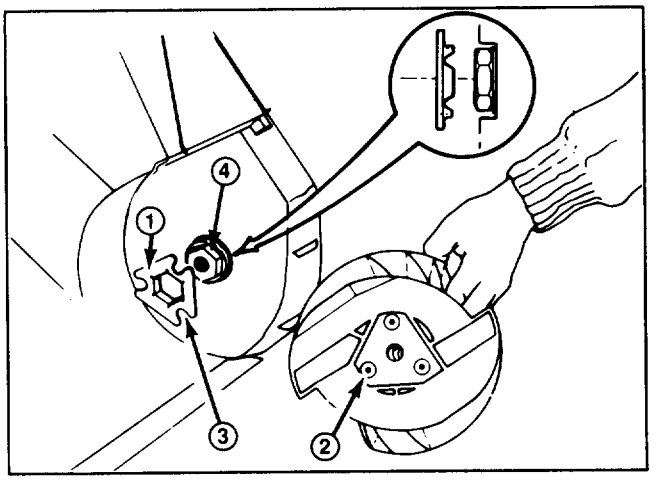

Figure 14

1. Coupler 3. Slot
2. Boss 4. Drive hex

7. Reinsert rotor shaft through rotor. Make sure that shaft fits into bearing on the right side. Torque to a minimum of 10 ft-lbs.

8. Reinstall cover and skid.

REPLACING BELTS

LARGE BELT REPLACEMENT

1. Remove (5) screws securing left side plate to snowthrower frame (Fig. 12). Remove side plate and skid.

2. Remove idler spring from idler arm (Fig. 15).

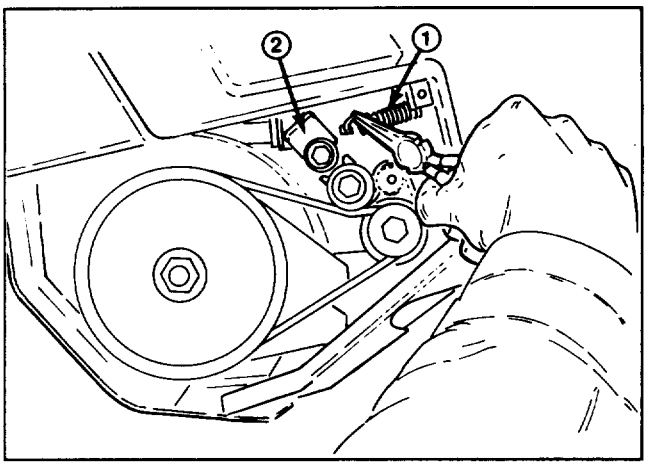

Figure 15

1. Idler spring 2. Idler arm

3. Rotate rotor with left hand while walking (sliding) belt off large pulley with right hand (Fig. 16).

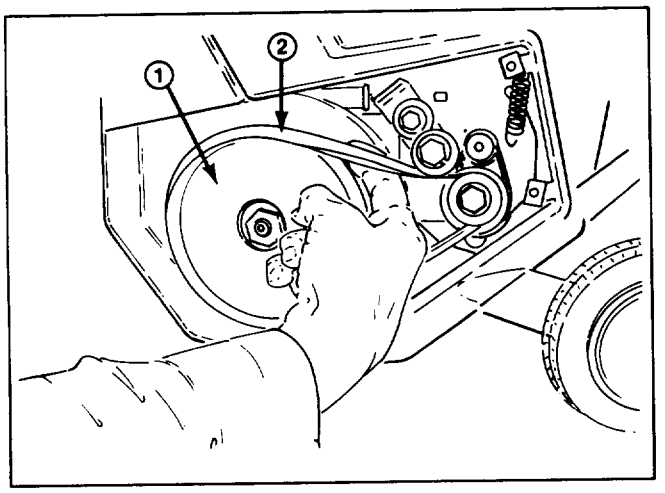

Figure 16

1. Large pulley
2. Belt

4. Slip new belt over small pulley. Lift up idler arm and slip belt under idler pulley (Fig. 17). Rotate rotor with left hand while walking (sliding) belt onto large pulley with right hand (Fig. 18).

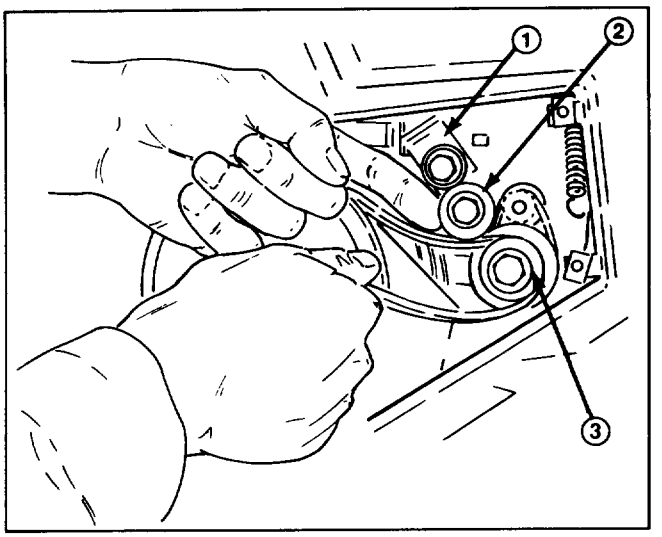

Figure 17

1. Idler arm
2. Idler pulley
3. Small pulley

5. Reassemble idler spring, making sure idler pulley is riding on belt.

6. Reinstall left side cover and skid with (5) screws.

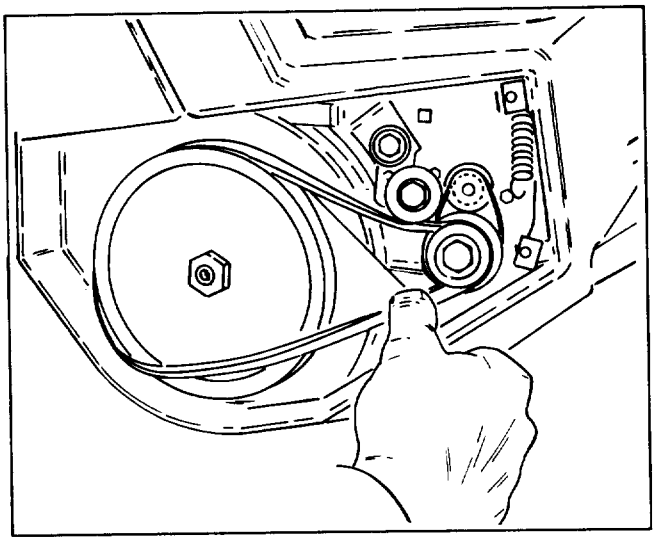

Figure 18

SMALL BELT REPLACEMENT

1. Remove (5) screws securing left side plate and skid to snowthrower frame (Fig. 12). Remove side plate and skid.

2. Remove large belt by slowly walking (sliding) it off small pulley (Fig. 16). Refer to steps 2–3 in Large Belt Replacement section.

3. Remove bolt (left hand thread) by turning bolt clockwise, remove (2) washers, and small pulley (Fig. 19). Remove and discard small belt.

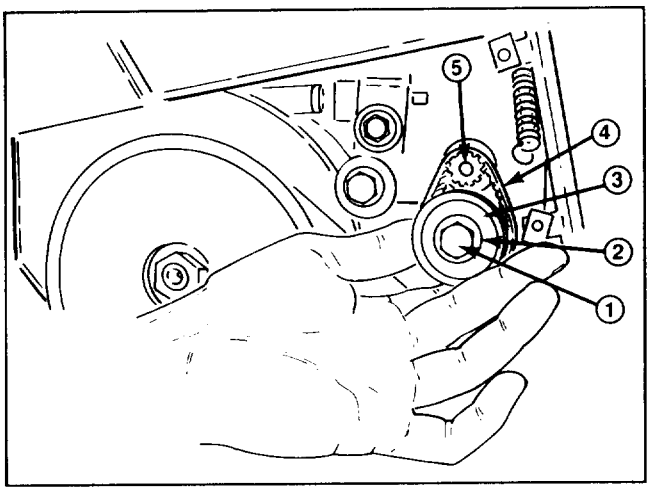

Figure 19

1. Bolt (left hand thread)
2. Washers
3. Small pulley
4. Small belt
5. Motor shaft pulley

4. Slide (2) washers onto bolt. Insert bolt through small pulley. Bolt must ride on bearings in small pulley.

5. Place new belt on small pulley.

6. Slide belt over motor shaft pulley (Fig. 19).

MAINTENANCE

7. When tightening bolt, bolt head and washers must be flush against small pulley. Torque bolt to 25–30 in-lbs. **DO NOT OVERTIGHTEN BOLT.**

8. Slip large belt over small pulley (Fig. 18). Refer to Large Belt Replacement, steps 4–6.

STORING SNOWTHROWER

1. Run snowthrower for a few minutes to melt any snow that may have accumulated on unit during use.

2. Examine the snowthrower thoroughly for worn, loose or damaged parts. If parts repair or replacement is necessary, contact your local Authorized TORO Service Dealer for assistance.

3. Examine extension cord and snowthrower cord set thoroughly for signs of wear or damage. Replace, if worn or damaged. Contact your local Authorized TORO Service Dealer or TORO Service Center for genuine TORO replacement parts.

4. Disconnect the extension cord from the snowthrower. Store the extension cord with the snowthrower to prevent misplacement.

5. Store the snowthrower in a clean, dry place. Cover it to provide protection.

PRODUCT IDENTIFICATION

A model and a serial number decal is located on the lower metal tube by the wheels. Always refer to specific numbers on the decal in correspondence or when replacement parts are needed.

TORO SERVICE SUPPORT

If help—concerning safety, set-up, operation, maintenance or troubleshooting—is ever needed, contact the local Authorized TORO Service Dealer, Distributor or TORO Service Center. Refer to the "Yellow Pages" for assistance. In addition to skilled service technicians, the dealer and distributor have factory approved accessories and replacement parts. Keep your TORO all TORO. Buy genuine TORO replacement parts and accessories.

MAINTENANCE RECORD

Date	Hours Used							


TORO

The Toro Promise

A Full One Year Residential Use Warranty

The Toro Company warrants this TORO Product for one year against defects in material or workmanship. To receive a replacement or repair, at Toro's option, just return the complete unit, postage prepaid, to the seller or any TORO Electric Service Dealer or the TORO Service Center, 5300 Shoreline Blvd., Mound, MN 55364, along with proof of purchase. This warranty covers product defects only. It does not cover incidental or consequential damages. Some states do not allow the exclusion or limitation of incidental or consequential damages, so the above limitation may not apply to you. This warranty gives you specific rights, and you may have other rights which vary from state to state.

COUNTRIES OTHER THAN THE UNITED STATES OR CANADA

Customers who have purchased TORO products exported from the United States or Canada should contact their TORO Distributor (Dealer) to obtain guarantee policies for your country, province, or state. If for any reason you are dissatisfied with your Distributor's service or have difficulty obtaining guarantee information, contact the TORO importer. If all other remedies fail, you may contact us at The Toro Company.