FORM NO. 3314-800 Rev. A

TORO®

MODEL NO. 51575 – 2000001 & UP

OPERATOR'S MANUAL

850 SUPER BLOWER/VAC™

IMPORTANT SAFETY INSTRUCTIONS

⚠ WARNING

To assure maximum safety, best performance, and to gain knowledge of the appliance, it is essential that you or any other operator of the appliance read and understand the contents of this manual before operating the appliance. Pay particular attention to the safety alert symbol ⚠ which means CAUTION, WARNING OR DANGER — "personal safety instruction." Read and understand the instruction because it has to do with safety. FAILURE TO COMPLY WITH INSTRUCTION MAY RESULT IN PERSONAL INJURY, RISK OF FIRE OR ELECTRICAL SHOCK.

SAVE THESE INSTRUCTIONS FOR FUTURE REFERENCE!

WARNING—To reduce the risk of fire, electric shock or injury:

1. Read and understand the contents of this manual before using the appliance. Be thoroughly familiar with the proper use of the appliance.

2. Keep everyone, especially children and pets, away from area of operation. Never allow children to operate the appliance. It is not a toy. Never allow adults to operate unit without first reading the Operator's Manual.

3. Never blow debris in the direction of bystanders or animals.

4. Always wear safety goggles or other suitable eye protection.

5. Never operate the appliance in wet or damp conditions. **DO NOT USE IN THE RAIN.**

6. Dress properly. Do not wear loose clothing or jewelry. They can catch in moving parts. Pin up long hair so that it cannot be drawn into unit's air inlet. Always wear substantial footwear and long pants.

7. Always wear an approved dust mask when using unit in dusty conditions.

8. Use the right appliance. Do not use the appliance for any job except that for which it was intended.

9. Use appliance only as described in this manual. Use only Toro attachments with appliance.

10. To reduce the risk of electric shock, use only an approved UL extension cord recommended for outdoor use with a maximum length of 100 feet (minimum 16 gauge). Replace a damaged extension cord immediately.

11. Properly connect extension cord to power supply cord to prevent disconnection of the cords (Fig. 6).

12. Avoid unintentional starting. Do not carry plugged in appliance with finger on switch.

13. Turn off all controls before unplugging cord.

14. Do not handle plug or appliance with wet hands.

15. Do not use appliance with a damaged cord or plug. If appliance is not working as it should, has been dropped, damaged, left outdoors, or dropped into water, return it to an Authorized Toro Service Dealer.

16. Don't abuse cord. Do not pull or carry appliance by cord. Do not use cord as a handle. Do not unplug appliance by pulling cord. To unplug, grasp the plug, not the cord.

17. Keep cord away from extreme heat, oil, and sharp edges. Replace damaged cords.

18. Never vacuum up anything that is burning or smoking, such as cigarettes, matches or hot ashes.

19. Do not put any object into openings (i.e. fan covers, air inlets or other openings in housing). Do not use appliance with any blocked openings; keep free of dust, lint, hair, and anything that may reduce air flow.

20. Do not use appliance to vacuum up any liquids, particularly flammable or combustible liquids such as gasoline or use in areas where they may be present.

21. Never vacuum up any hazardous materials such as asbestos.

©The Toro Company – 1991

⚠ SAFETY INSTRUCTIONS

22. Always be sure of your footing. Keep a firm hold on the handle and walk, never run. Use extra care when cleaning on stairs.

23. Stop the motor and unplug the supply cord whenever you leave the appliance, before cleaning the housing, and when making any repairs or inspections.

24. When not in use, store your appliance in a dry place out of the reach of children.

25. Keep all fasteners tight to be sure the appliance is in safe working condition.

26. Never operate without proper guards or other protective safety devices in place.

27. Do not put hands or feet near rotating parts. Keep clear at all times.

28. If the appliance should start to vibrate abnormally, stop the motor and check immediately for the cause. Vibration is generally a warning of trouble.

29. Do not operate your appliance after it has been dropped or damaged. Return it to your nearest Authorized Toro Service Dealer for inspection or repair.

30. This appliance is provided with double insulation. Use only identical replacement parts. See page 7 for Servicing of Double-Insulated Appliances.

31. When servicing use only identical replacement parts. Replace or repair damaged cords.

32. This appliance is intended for residential use only.

ASSEMBLY INSTRUCTIONS

ATTACH OUTLET TUBES

Note: Turn off unit and unplug from electrical outlet before adding or switching attachments.

1. Thread outlet tubes together with a twisting motion (Fig. 1).

2. Thread assembled tubes into blower outlet (Fig. 1).

Note: Inlet cover must be securely locked into position, activating interlock switch, before blower will operate.

Note: Blower is shipped with inlet cover installed.

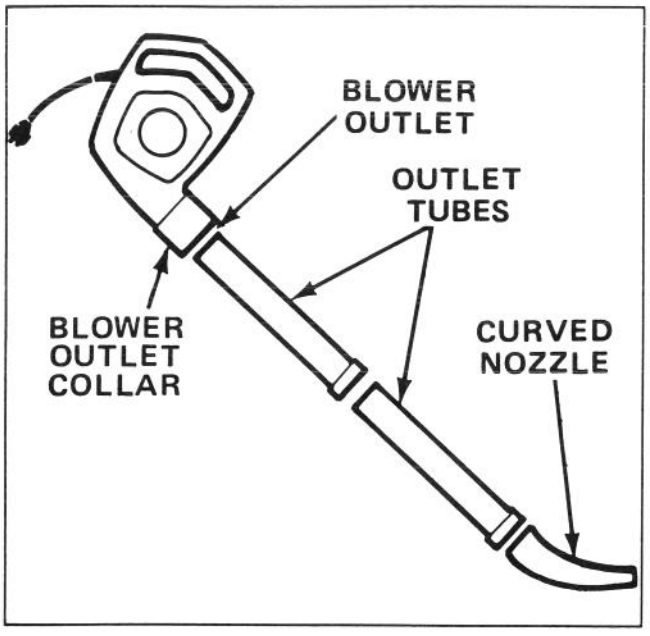

Figure 1

MOUNT VACUUM

⚠ CAUTION

- **Motor impeller rotates for a few seconds after blower is turned off.**
- **Rotating impeller can cut or injure fingers.**
- **Never remove inlet cover when motor is operating or when unit is plugged in.**

Note: Turn off unit and unplug from electrical outlet before adding or switching attachments.

1. If unit was previously used as a blower, remove blower tubes (Fig. 1). Do not attempt to remove outlet collar.

2. Grasp inlet cover and rotate it counterclockwise until locking tabs release. Remove cover (Fig. 2).

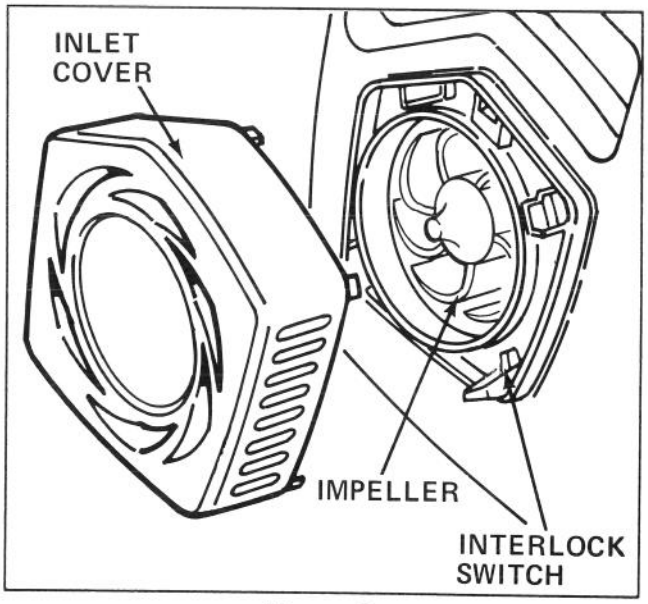

Figure 2

ASSEMBLY INSTRUCTIONS

3. Slide upper middle and lower vacuum tubes together as shown in Figure 3.

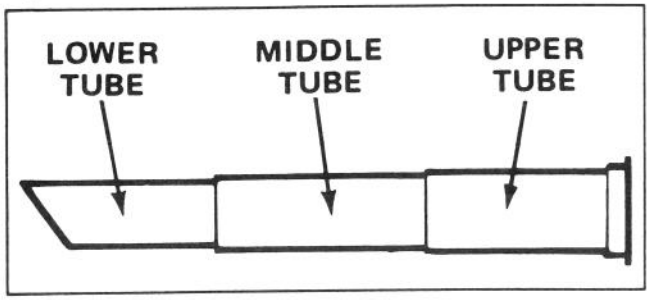

Figure 3

4. Insert upper tube into blower inlet and rotate clockwise until tabs lock (Fig. 4). Angled end of lower tube should be positioned downward.

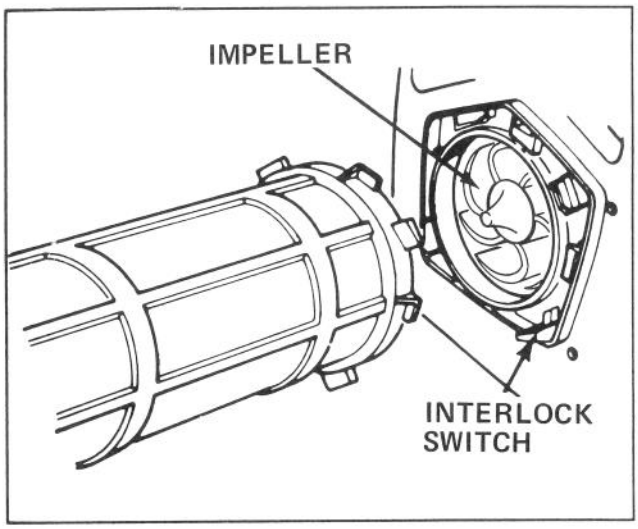

Figure 4

Note: Upper tube mounting tabs must be securely locked into position, activating interlock switch, before blower will operate.

5. Fit opening of bag over outlet cover on blower. Pull strap tightly to overlap velcro tabs and secure behind outlet cover (Fig. 5).

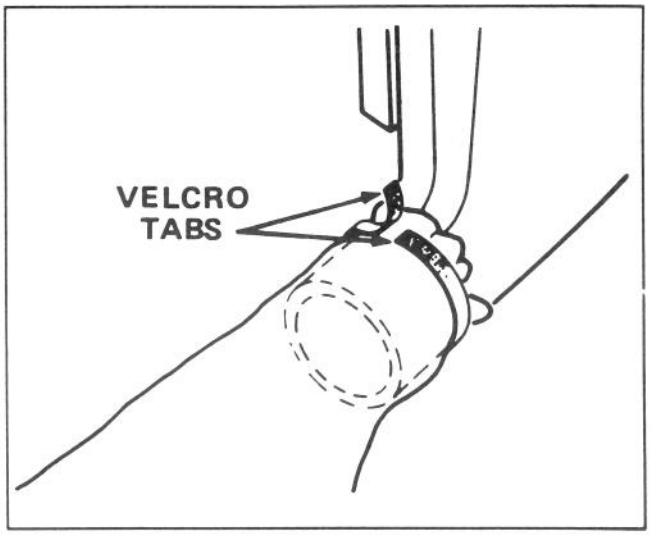

Figure 5

BEFORE OPERATING

SECURING POWER SUPPLY CORD

⚠ WARNING

- **Electric shock can cause injury or death.**
- **Use only a UL listed extension recommended for outdoor use and with a maximum length of 100 feet (minimum 16 gauge).**
- **Don't handle plug or appliance with wet hands or while standing in water.**

Note: The proper extension cord is a requirement for safe and efficient use of your appliance.

1. Secure the power supply cord and a suitable extension cord as shown in Figure 6.

Note: Do not unplug extension cord by pulling on cord. To unplug, grasp the plug, not the cord.

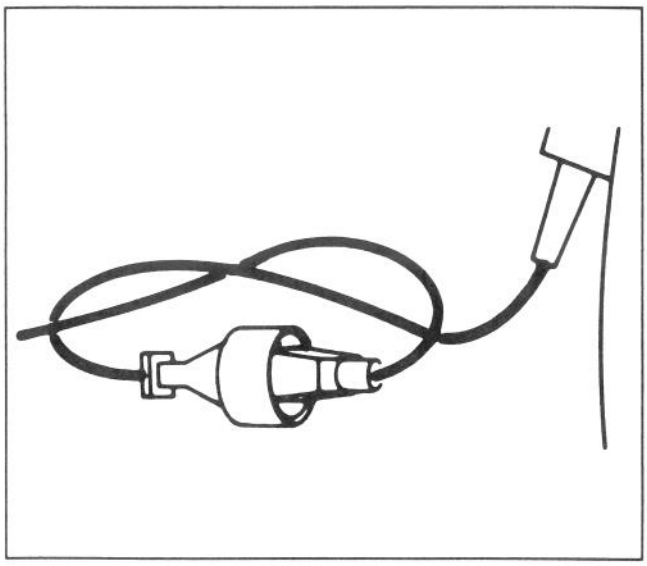

Figure 6

OPERATING INSTRUCTIONS

⚠ CAUTION

- **Flying debris can injure operator or bystanders.**
- **Always wear safety goggles or other suitable eye protection, long pants, and shoes while operating appliance.**
- **Never operate unit near bystanders or pets, etc.**
- **Use extra care when cleaning debris from stairs.**

BLOWER

Your blower will easily blow debris from patios, walkways, garages, lawns, bushes, etc. and many hard to reach places where debris can accumulate.

Your blower features a two speed control switch (Fig. 7) which allows you to adjust the volume of airflow by moving the switch into slow or fast position. Experience with the unit will indicate the amount of airflow necessary for each application.

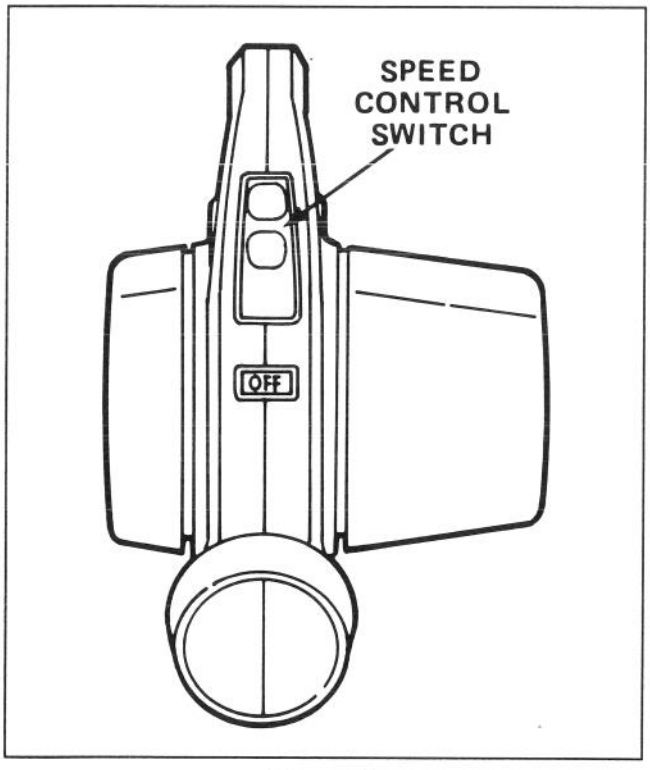

Figure 7

⚠ WARNING

Use only Toro attachments with appliance.

VACUUM

⚠ CAUTION

- **Flying debris could cause injury.**
- **Never run vacuum without vacuum bag attached.**
- **Always make sure bag zipper is closed when unit is in use.**

⚠ WARNING

- **Electric shock can cause injury or death.**
- **Use only a UL listed extension recommended for outdoor use and with a maximum length of 100 feet (minimum 16 gauge).**
- **Don't handle plug or appliance with wet hands or while standing in water.**

1. With vac tubes and bag attached, pick up unit with left hand, holding handle and right hand on textured part of housing. Bag should be on right side. Place bag strap over shoulder, and adjust length to fit (Fig. 8).



Figure 8

OPERATING INSTRUCTIONS

2. Slide on/off switch to the "slow" or "fast" position.

3. Swing unit slowly back and forth over leaves to be vacuumed. Do not force tube into pile of debris. Debris should not be stored in vacuum bag. Bag should be emptied after each use for more efficient operation. After about three uses, bag should be thoroughly cleaned. Turn bag inside out and shake out dust and excess debris.

Note: To prevent debris and dust from falling out of bag inlet when bag is being emptied, squeeze inlet and secure with velcro tabs.

⚠ WARNING

Do not use appliance with any blocked openings; keep it free of dust, lint, hair, and anything that may reduce air flow.

Note: Dry leaves vacuum better and shred into smaller particle sizes.

IMPORTANT

- **This unit is designed to pick up and shred dry leaves and other light, leafy debris.**
- **Do not attempt to pick up stones, gravel, broken glass, twigs, bark, acorns or pine cones as severe damage to fan blades may result.**
- **Do not pick up anything that is burning or smoking, such as cigarettes, matches or hot ashes.**
- **Do not pick up any liquids, particularly flammable or combustible liquids such as gasoline or use in areas where they may be present.**
- **Do not tip vacuum tubes upright and force feed debris into tubes.**

If the appliance should start to vibrate or make abnormal noise, stop the appliance and check for cause.

CONVERSION TO BLOWER

To convert this unit from a vacuum to a blower, simply remove vacuum bag and tubes. Replace inlet cover and blower tubes.

Note: Make sure inlet cover mounting tabs are securely locked into position, activating interlock switches.

MAINTENANCE

CLOGGING

If the unit should become clogged with debris, the obstruction can usually be cleared by turning the unit off and then promptly compressing the bag while it is still inflated, thereby forcing air back out through the inlet tubes. This reverse airflow is usually sufficient to dislodge most obstructions.

If the restriction cannot be cleared by compressing the bag, then proceed as follows:

⚠ CAUTION

1. **Turn off and unplug unit.**
2. **Remove tubes.**
3. **Using a small stick or rod, carefully reach into impeller opening and clear out debris.**

BAG CLEANING

A dirty bag will obstruct the air flow, thereby reducing the performance of your vacuum. It is recommended that the bag be turned inside out and shaken out vigorously. After shaking, the bag should be returned to its original side out and reinstalled. This procedure should be performed on a regular basis. In addition, the bag should be washed by hand once a year in soapy water.

⚠ WARNING

The bag is made of material that will catch the majority of debris, such as small stones that may be thrown into it. However, under normal usage, this material is subject to deterioration and wear. Therefore, check bags frequently. If bag is defective, replace it with a genuine TORO part.

IMPELLER WEAR

If a loss of performance is detected while operating blower, unplug unit, remove inlet cover, and check impeller blades for wear. If blades are severely worn (Fig. 9), see your Authorized TORO Service Dealer for service and parts.

MAINTENANCE

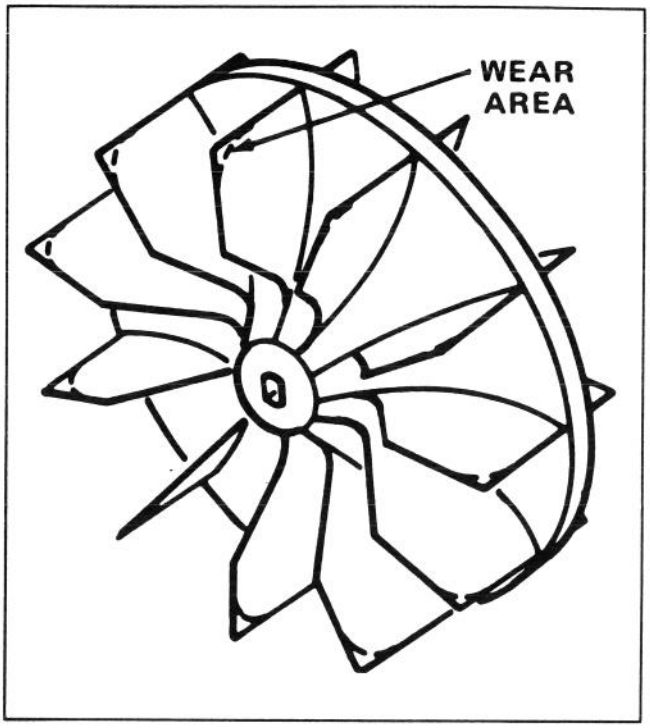

Figure 9

SERVICING DOUBLE-INSULATED APPLIANCE

In a double-insulated appliance, two systems of insulation are provided instead of grounding. No grounding means is provided on a double-insulated appliance, nor should a means for grounding be added to the appliance. Servicing a double-insulated appliance requires extreme care and knowledge of the system, and should be done only be qualified service personnel. Replacement parts for a double-insulated appliance must be identical to the parts they replace. A double-insulated appliance is marked with the words "DOUBLE INSULATION" or "DOUBLE INSULATED." The symbol (square within a square) ⧈ may also be marked on the appliance.

PRODUCT IDENTIFICATION

A model and a serial number decal is located on the blower housing. Always refer to specific numbers on this decal in correspondence or when replacement parts are needed.

TORO SERVICE SUPPORT

If help - concerning safety, set-up, operation, maintenance, or troubleshooting - is ever needed, contact the local Authorized TORO Service Dealer or Distributor. Refer to the ''Yellow Pages" for assistance. In addition to skilled service technicians, the dealer and distributor have factory approved accessories and replacement parts. Keep your TORO all TORO. Buy genuine TORO replacement parts and accessories. Use only attachments recommended by TORO.

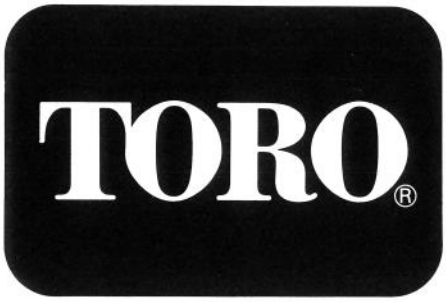
TORO®

The Toro Promise

A Full Two Year Residential Use Warranty

The Toro Company warrants this TORO product for two years against defects in material or workmanship. To receive a replacement or repair, at Toro's option, just return the complete unit, postage prepaid, to the seller or any TORO Electric Service Dealer or the TORO Service Center, 5300 Shoreline Blvd., Mound, MN 55364, along with proof of purchase. This warranty covers product defects only. **It does not cover incidental or consequential damages. Some states do not allow the exclusion or limitation of incidental or consequential damages, so the above limitation may not apply to you.** This warranty gives you specific rights, and you may have other rights which vary from state to state.

COUNTRIES OTHER THAN THE UNITED STATES OR CANADA

Customers who have purchased TORO products exported from the United States or Canada should contact their TORO Distributor (Dealer) to obtain guarantee policies for your country, province, or state. If for any reason you are dissatisfied with your Distributor's service or have difficulty obtaining guarantee information, contact the TORO importer. If all other remedies fail, you may contact us at The Toro Company.