4045 Directional Drill with Cab

Model No. 23823—Serial No. 314000001 and Up
Model No. 23823A—Serial No. 314000001 and Up
Model No. 23823C—Serial No. 314000001 and Up
Model No. 23823TE—Serial No. 314000001 and Up
Model No. 23823W—Serial No. 314000001 and Up
Model No. 23825—Serial No. 313000001 and Up
Model No. 23825—Serial No. 314000001 and Up
Model No. 23825A—Serial No. 314000001 and Up
Model No. 23825C—Serial No. 314000001 and Up
Model No. 23825TE—Serial No. 314000001 and Up
Model No. 23825W—Serial No. 314000001 and Up

Electrical Schematic

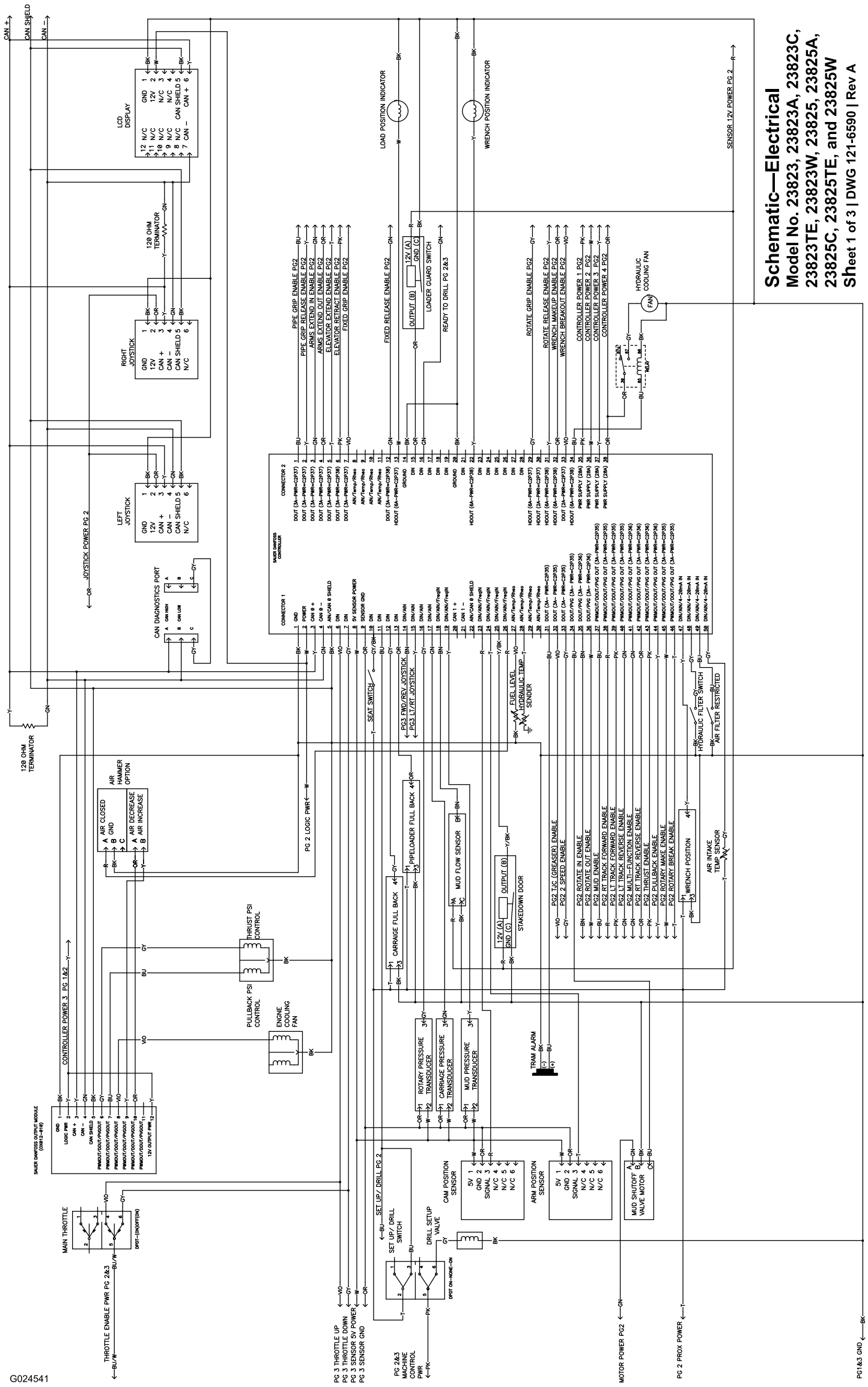

©2014—The Toro® Company, 8111 Lyndale Avenue South, Bloomington, MN 55420

©2014—The Toro® Company, 8111 Lyndale Avenue South, Bloomington, MN 55420

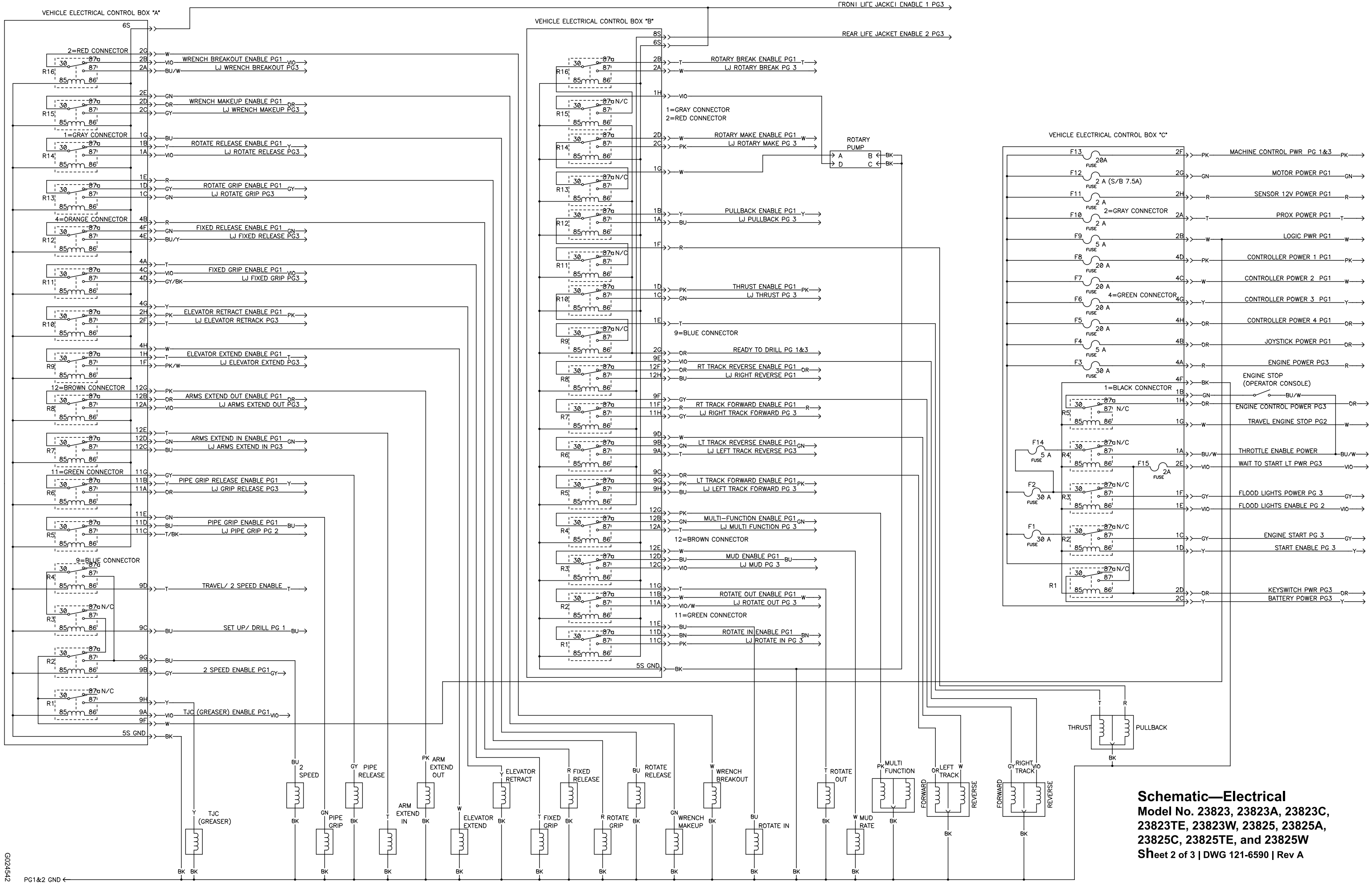

Schematic—Electrical
Model No. 23823, 23823A, 23823C, 23823TE, 23823W, 23825, 23825A, 23825C, 23825TE, and 23825W
Sheet 2 of 3 | DWG 121-6590 | Rev A

G024542

©2014—The Toro® Company, 8111 Lyndale Avenue South, Bloomington, MN 55420

G024543

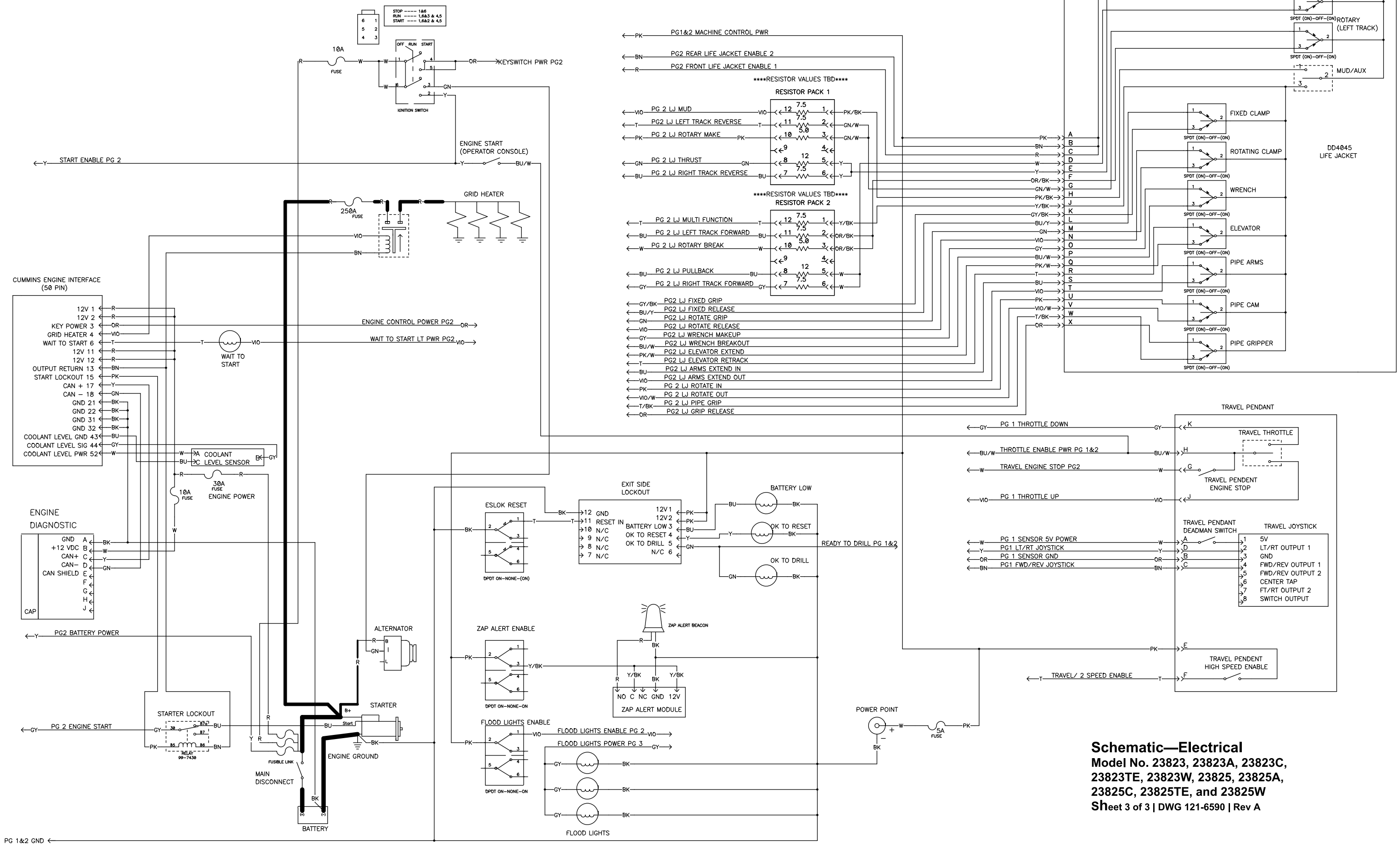

Schematic—Electrical

Model No. 23823, 23823A, 23823C, 23823TE, 23823W, 23825, 23825A, 23825C, 23825TE, and 23825W

Sheet 3 of 3 | DWG 121-6590 | Rev A