FORM NO. 3318–914

TORO®

WASHOUT PORT KIT

PART NO. 95–3282

INSTALLATION INSTRUCTIONS

Loose Parts

Note: Use the chart below to identify parts used for assembly.

DESCRIPTION	QTY.	USE
Fitting	1	Install washout fitting
O–ring	1	
Bolt 1/4–20 x 7/8” (22 mm)	2	
Washer 1/4” (19 mm)	2	
Nut (thin) 1/4”	2	
Hose connector	1	

Locate Fitting On Mower

1. Shut off engine and and wait for all moving parts to stop. Remove spark plug wire(s).

⚠ CAUTION

POTENTIAL HAZARD
- **If you leave the wire on the spark plug, someone could start the engine.**

WHAT CAN HAPPEN
- **Accidental starting of engine could seriously injure you or other bystanders.**

HOW TO AVOID THE HAZARD
- **Pull wire off spark plug before you do any maintenance. Also push wire aside so it does not accidentally contact spark plug.**

2. Clean underside and examine integrity of mower.

⚠ WARNING

POTENTIAL HAZARD
- **Corroded or cracked mowers may be weakened or damaged by drilling to install washout fitting.**

WHAT CAN HAPPEN
- **A weakened mower can crack or break.**
- **Broken or missing pieces exposes you and others to thrown objects or blade contact.**

HOW TO AVOID THE HAZARD
- **Only install fitting on sound mowers.**
- **Replace all broken or cracked mowers immediately.**
- **Never put your hands or feet under the mower or through openings in the mower.**

3. Attach coupling and fitting to hose (Fig. 1).

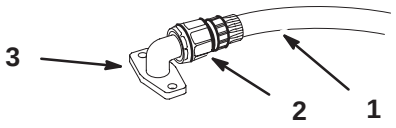

Figure 1

1. Hose
2. Coupling
3. Fitting

4. Select a location with the hose fitting assembly on left side of mower inside the preferred location diagram (Fig. 2 or 3).

Note: Hose should not interfere with wheels, handles or controls.

IMPORTANT: Location must be on a flat surface and not obstructing any decals.

IMPORTANT: Look under mower, location must be inside blade cutting circle away from any mulching baffles and not interfere with any other mower hardware.

Riding Mowers

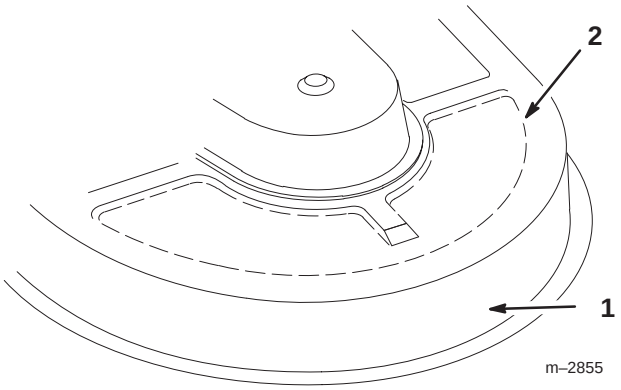

Figure 2

1. Left side of mower
2. —— Preferred location

Walk-Behind Mowers

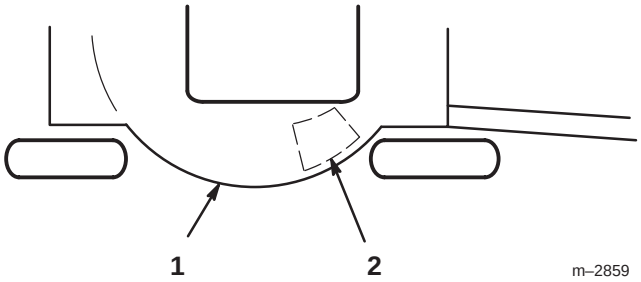

Figure 3

1. Left side of mower
2. —— Preferred location

Mark and Drill Holes

5. Use fitting as a template and mark the location of two mounting holes (Fig. 4).

6. Place a straight edge between mounting holes and mark the center line (Fig. 4).

7. Measure half-way between mounting holes and mark water hole location (Fig. 4).

8. Center punch and drill two (2) 9/32” (8 mm) mounting holes and one (1) 3/8” (9.5 mm) water hole (Fig. 4).

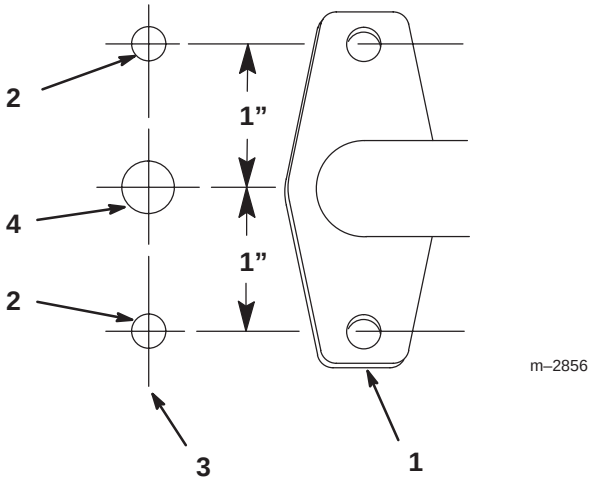

Figure 4

1. Fitting
2. Mounting holes 9/32” (8 mm)
3. Center line
4. Water hole 3/8” (9.5 mm)

Install Fitting

9. Place fitting on mower facing outward, and secure with (2) 1/4–7/8” (22 mm) bolts, (2) 1/4” (7 mm) washers and (2) 1/4” nuts (Fig. 5 or 6).

Riding Mowers

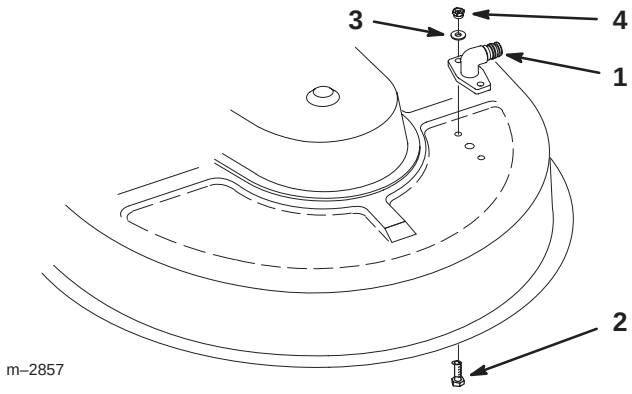

Figure 5

1. Fitting
2. Bolts 1/4–7/8” (22 mm)
3. Washer 1/4” (7 mm)
4. Nut 1/4”

Walk-Behind Mowers

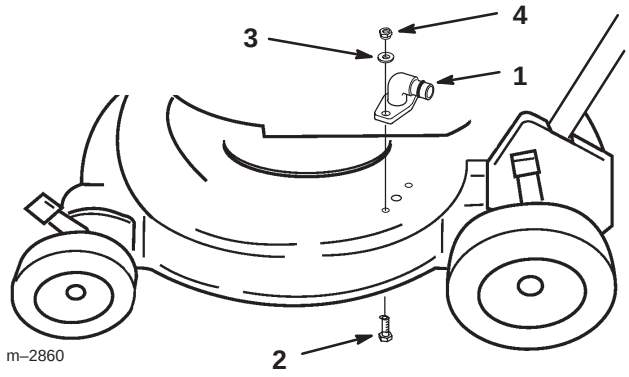

Figure 6

1. Fitting
2. Bolts 1/4–7/8” (19 mm)
3. Washer 1/4” (7 mm)
4. Nut 1/4”

Washing Underside of Mower

After each use wash the underside of the mower to prevent grass build-up for improved mulch action and clipping dispersal.

1. Park the machine on a hard level surface, disengage the power take off (PTO) and turn the ignition key to “OFF” to stop the engine.

2. Attach coupling to the end of a garden hose and snap onto mower washout fitting, turn water on high (Fig. 7 or 8).

3. Lower the mower to the lowest height-of-cut.

4. Start the engine, refer to Operator’s Manual for instructions. Engage blade or power take off (PTO) and let mower run for one to three minutes.

Note: The larger the mower the longer you may need to wash.

5. Disengage the blade, power take off (PTO) and turn the ignition key to “OFF” to stop the engine. Wait for all moving parts to stop.

6. Turn the water off, remove coupling from the washout fitting and hose.

Note: If the mower is not clean after one washing, soak and let stand for 30 minutes. Then repeat process again.

7. Run mower again for one to three minutes to remove excess water.

Riding Mowers

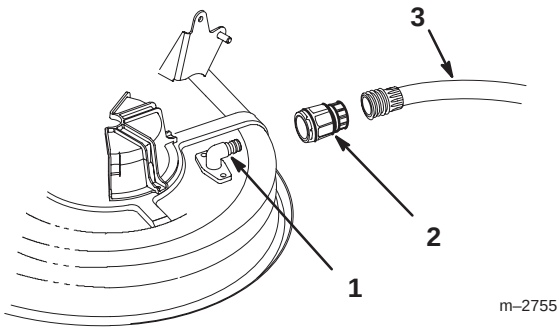

Figure 7

1. Washout fitting
2. Coupling
3. Hose

Walk-Behind Mowers

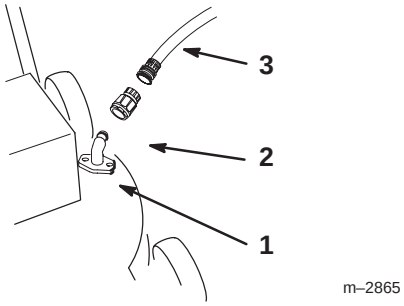

Figure 8

1. Washout fitting
2. Coupling
3. Hose

Maintenance

Spread petroleum jelly on washout fitting o-ring to make coupling slide on easier and protect o-ring.

⚠ WARNING

POTENTIAL HAZARD

- **A broken or missing washout fitting could expose you and others to thrown objects or blade contact.**

WHAT CAN HAPPEN

- **Contact with thrown debris or blade contact will cause injury or death.**

HOW TO AVOID THE HAZARD

- **Replace broken or missing washout fitting immediately, before using mower again.**
- **Plug any hole(s) in mower with bolts and locknuts.**
- **Never put your hands or feet under the mower or through openings in the mower.**