Form No. 3379-717 Rev A

TORO®

Count on it.

Parts Catalog

Hand-Held Sweeper Blower

Model No. 51701—Serial No. 314000001 and Up

Register at www.Toro.com.
Original Instructions (EN)

3379-717 A

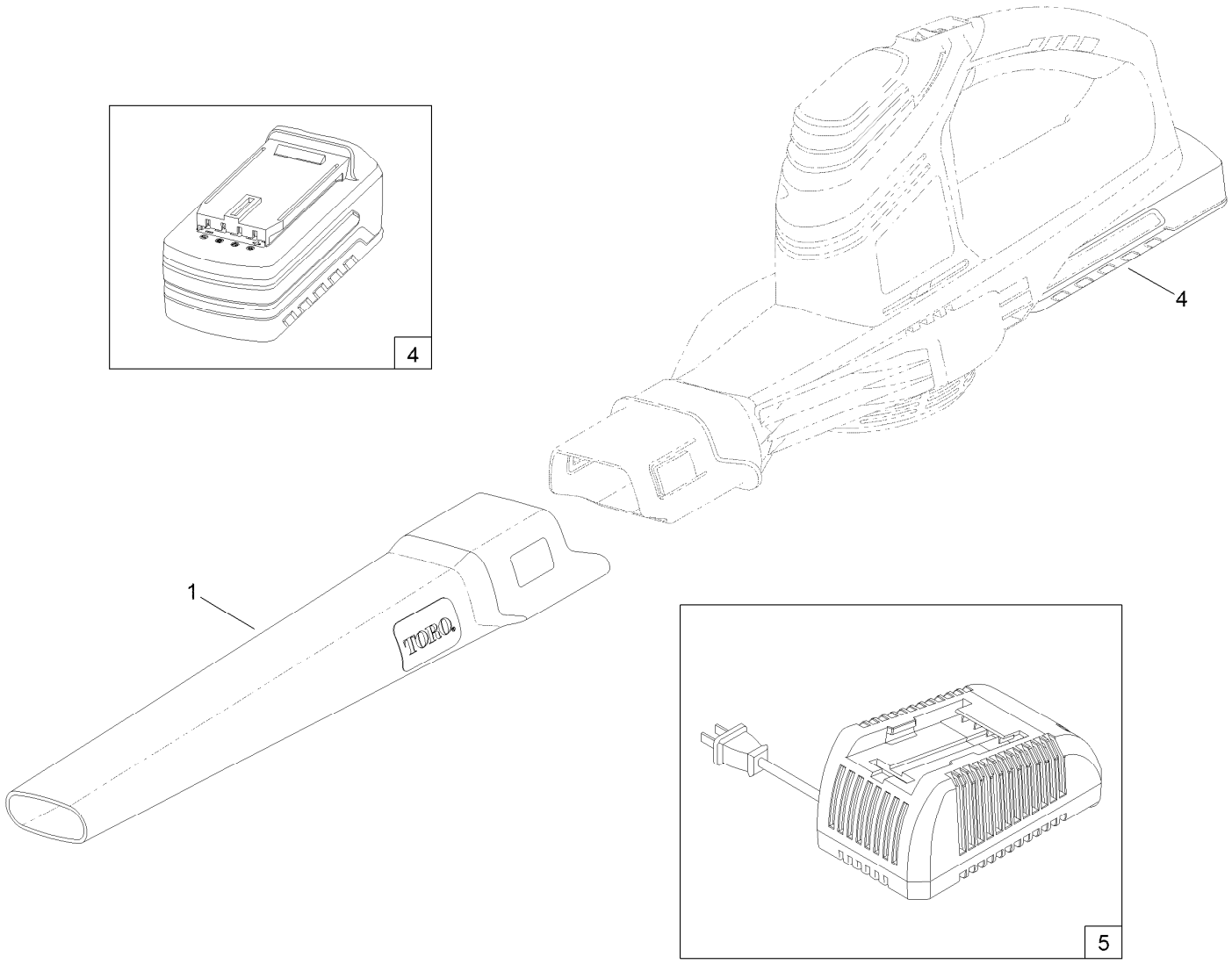

Hand-Held Sweeper Blower Assembly

Ref.	*Part Number*	*Qty.*	*Description*
1	125-8253	1	Tube-Outlet, Sweeper
4	88502	1	Battery-Li Ion, 20V Max
5	88500	1	Charger-20V Max, Li Ion

Attachments and Accessories

For 51701 Hand-Held Sweeper Blower

Product Name	Model/Part
12in Cordless Trimmer (without Battery and Charger)	51484T
22in Cordless Hedge Trimmer (without Battery and Charger)	51494T
20V Max Li-Ion Battery Charger	88500
20V Max Standard Battery Pack	88502



Count on it.