FORM NO. 3319–622

TORO®

CCR POWERLITE®

SNOWTHROWER

Model No. 38175–8900001 & Up

Parts Catalog

ORDERING REPLACEMENT PARTS

To order replacement parts, please supply: the part number, the quantity, and the description of each part desired.

Contents

Description	Page
Pulley And Belt Cover Assembly	1
Chute Assembly	2
Auger Assembly	3
Engine And Wheel Assembly	4
Handle Assembly	5
Engine Tecumseh Model No. HSK600 Type 1680T	6
Engine Tecumseh Model No. HSK600 Type 1680T	7
Carburator No. 640086	8
Recoil Starter No. 590743	9
Starter Motor & Switch Housing	10

Part Description Abbreviations

Part descriptions in this catalog may include the following abbreviations.

Abbreviation	Meaning
AR	as required
ASM	assembly
CARR	carriage
DEG	degrees
FH	flat head
GA	gauge
HF	hex flange
HFW	hex flange washer
HH	hex head
HHF	hex head flange
HHST	hex head self tapping
HJ	hex jam
HOC	height-of-cut
HS	hex socket
HSBH	hex socket button head
HSFH	hex socket flat head
HSH	hex socket head
HWH	hex washer head
HWHTF	hex washer head thread forming
INC	incorporated
LH	left hand
PH	pan head
PPH	Phillips pan head
PTO	power take off
RH	right hand
SFH	slotted fillister head
SH	square head
SHWH	slotted hex washer head
SPH	slotted pan head
STD	standard
TAP	self tapping
TH	truss head
TTH	Torx truss head
WH	wing head

Important Format Explanations

This catalog uses special formats to convey information in illustrations and parts lists. Specifically, one format is used in conjunction with service assemblies and another with quantities associated with reference numbers.

Service Assemblies

Parts within service assemblies have reference numbers in the form *X:Y. X* is the reference number of the service assembly and *Y* is a sequential number unique to each part within the service assembly.

For example, a wheel assembly might be identified by reference number 6, the tire by 6:1, the valve by 6:2, and the wheel by 6:3. When you order the assembly identified by reference number 6, you receive all parts identified by reference numbers 6:1, 6:2, and 6:3. However, you may also order any part individually.

Reference numbers of this type appear in part lists and as callouts in illustrations.

Reference Numbers with Quantities

Illustrations may have a quantity in parentheses next to a reference number, in the form *X (Y). X* is the reference number. *Y* in parentheses is the quantity of the part identified by the reference number.

For example, the illustration callout 4 (2) indicates that two parts are used in that instance.

© The TORO Company — 1997
All Rights Reserved

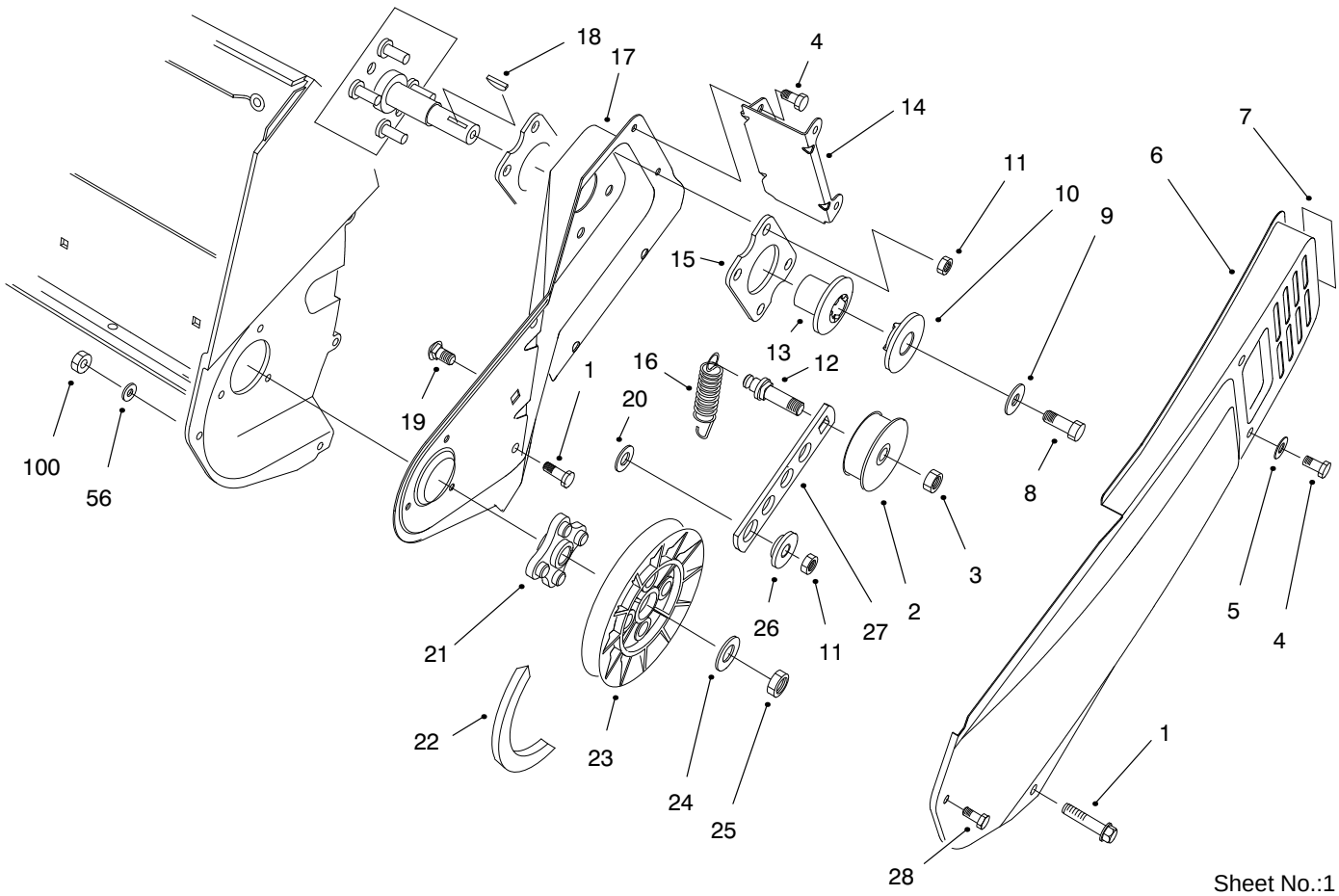

Sheet No.:1

PULLEY & BELT COVER ASSEMBLY

Ref. No.	Part No.	Qty.	Description
1	46–8094	3	Screw–TAP
2	71–5260	1	Pulley–Idler
3	3296–59	1	Nut–Lock
4	32144–4	4	Screw–TAP
5	3256–1	2	Washer–Flat
6	75–8830	1	Cover–Belt
7	95–1904	1	Decal–Hot
8	3235–6	1	Screw–HH
9	3256–71	1	Washer–Flat
10	71–5060	1	Cap–Half Sheave
11	3296–29	5	Nut–Lock
12	75–8720	1	Pin–Idler
13	71–5050	1	Body–Half Sheave
14	75–8870	1	Bracket–Cover
15	71–5290	2	Plate–Engine
16	75–9020	1	Spring–Extension
17	75–8810	1	Sideplate–LH
18	3257–3	1	Key–Woodruff
19	3230–23	1	Screw–CARR
20	25–5640	1	Washer
21	75–8740	1	Hub
22	75–9010	1	”v” Belt
23	75–8750	1	Pulley
24	3256–25	1	Washer–Flt
25	3296–38	1	Nut–Lock
26	75–8700	1	Bushing–Idler

Ref. No.	Part No.	Qty.	Description
27	75–9050	1	Arm–Idler
28	32105–23	1	Screw–HH
56	3256–14	1	Washer–Flat
100	3296–2	1	Nut Lock

3319–622

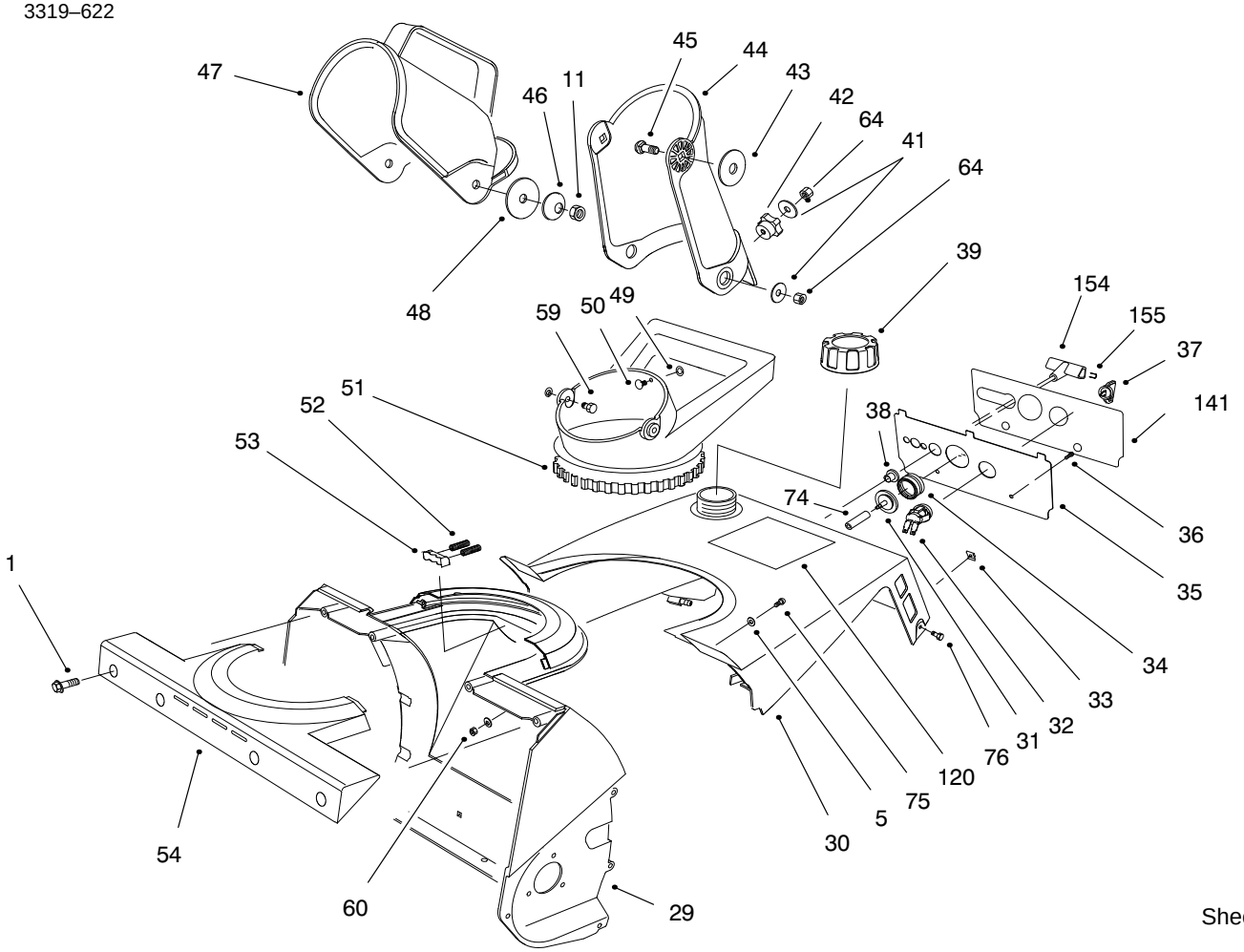

Sheet No.:2

Chute Assembly

Ref. No.	Part No.	Qty.	Description
1	46–8094	4	Screw–TAP
5	3256–1	4	Washer–Flat
11	3296–29	2	Nut–Lock
29	75–8660	1	Housing
30	75–8800	1	Shroud–Upper
31	44–2750	1	Body–Primer
32	40–5940	1	Switch–Key
33	49–1490	2	”j” Nut
34	66–7460	1	Bulb–Primer
36	32144–53	2	Screw–Tf Acorn Hd
37	63–8360	1	Key–Ignition
38	23–7470	1	Guide–Rope
39	55–3573	1	ASM–Gas Cap
41	3256–81	2	Washer–Flat
42	233–67	1	Knob
43	95–1905	2	Washer–Rubber
44	75–8760	1	Chute–Discharge
45	3230–2	2	Screw–CARR
46	3290–340	2	Washer–Spring
47	75–8770	1	Deflector–Chute
48	3256–68	2	Washer–Flt
49	32115–15	3	Retainer
50	3229–11	1	Bolt–CARR
51	75–8670	1	Handle–Chute
52	75–9170	2	Spring–Compression
53	75–9160	1	Detent–Chute

Ref. No.	Part No.	Qty.	Description
54	75–8650	1	Retainer–Chute
59	321–3	2	Screw–HH
60	3296–42	2	Nut–Lock
64	3296–56	2	Nut–Hex Lock
74	44–3173	1	Hose–Primer
75	3250–32	2	Screw–PPH
76	32144–89	2	Screw–HH
78	75–9030	1	Panel–Control
120	80–0690	1	Decal–Powerlite E
141	84–5430	1	Decal–Panel
154	92–4853	1	Handle–Starter
155	92–5424	1	Staple–Handle

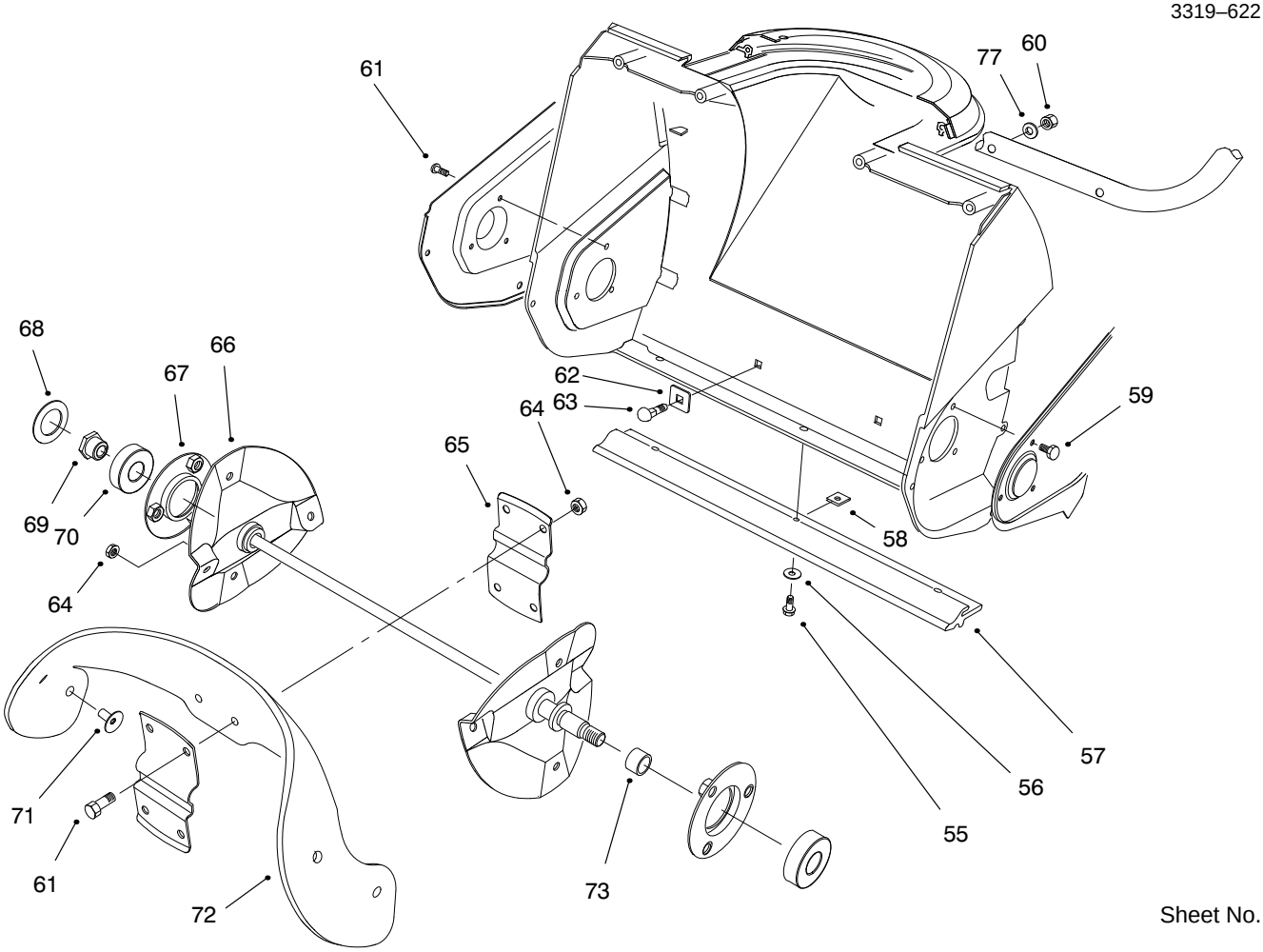

Sheet No.:3

Auger Assembly

Ref. No.	Part No.	Qty.	Description
55	32144–34	3	Screw–Hex Slot
56	3256–14	3	Washer–Flat
57	75–8780	1	Scraper
58	32115–19	3	”u” Nut
59	321–3	3	Screw–HH
60	3296–42	2	Nut–Lock
61	3234–33	7	Screw–HFW
62	75–9040	2	Washer–Square
63	3229–5	2	Screw–CARR
64	3296–56	12	Nut–Hex Lock
65	75–8880	2	Support–Motor
66	75–8840	1	Wa–Rotor
67	75–9080	2	Wa–Flange Bearing
68	75–9180	1	Washer–Rubber
69	75–8690	1	Nut–Rotor Shaft
70	38–7820	2	Bearing–Ball
71	84–1970	8	Screw–Countersunk
72	84–1980	2	Blade–Rotor
73	75–8710	1	Spacer
77	3–7501	2	Washer–Curved

Ref. No.	Part No.	Qty.	Description

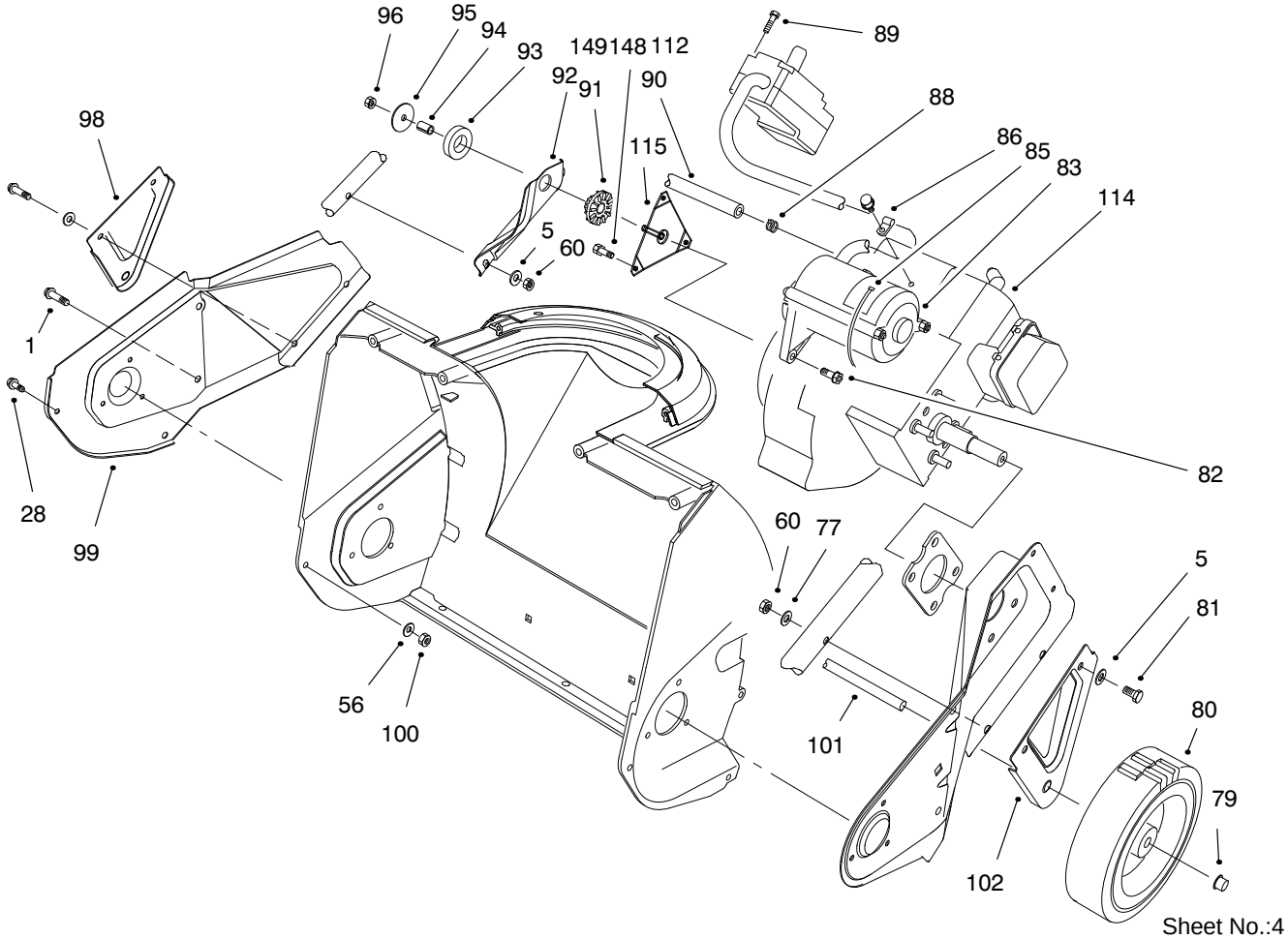

Sheet No.:4

ENGINE & WHEEL ASSEMBLY

Ref. No.	Part No.	Qty.	Description
1	46–8094	3	Screw–TAP
5	3256–1	6	Washer–Flat
28	32105–23	1	Screw–HH
56	3256–14	1	Washer–Flat
60	3296–42	4	Nut–Lock
77	3–7501	2	Washer–Curved
79	3290–320	2	Nut–Push
80	23–3250	2	Wheel
81	321–10	4	Screw–HH
82	80–0700	2	Screw–HH Tork
83	77–0402	1	ASM–Switch Housing
85	250–7	1	Tie–Cable
86	2412–91	1	Clamp–Cable
88	2412–98	2	Clamp–Hose
89	32144–27	2	Screw
90	49–2483	1	Hose–Fuel
91	75–9100	1	Bushing–Isolation
92	75–8980	1	Support–Engine
93	95–1903	1	Ring–Isolator
94	80–0650	1	Spacer–Mount
95	3256–58	1	Washer–Flt
96	3296–16	1	Nut–Lock
98	75–8900	1	Bracket–Wheel
99	75–8820	1	Sideplate–RH
100	3296–2	1	Nut Lock
101	27–0062	1	Axle

Ref. No.	Part No.	Qty.	Description
102	75–8910	1	Bracket–Wheel
112	94–2789	3	Screw–Thread Forming
114		1	Engine
115	92–6012	1	ASM–Bracket & Stud
148	92–6031	A/R	Screw
149	3255–10	A/R	Lockwasher

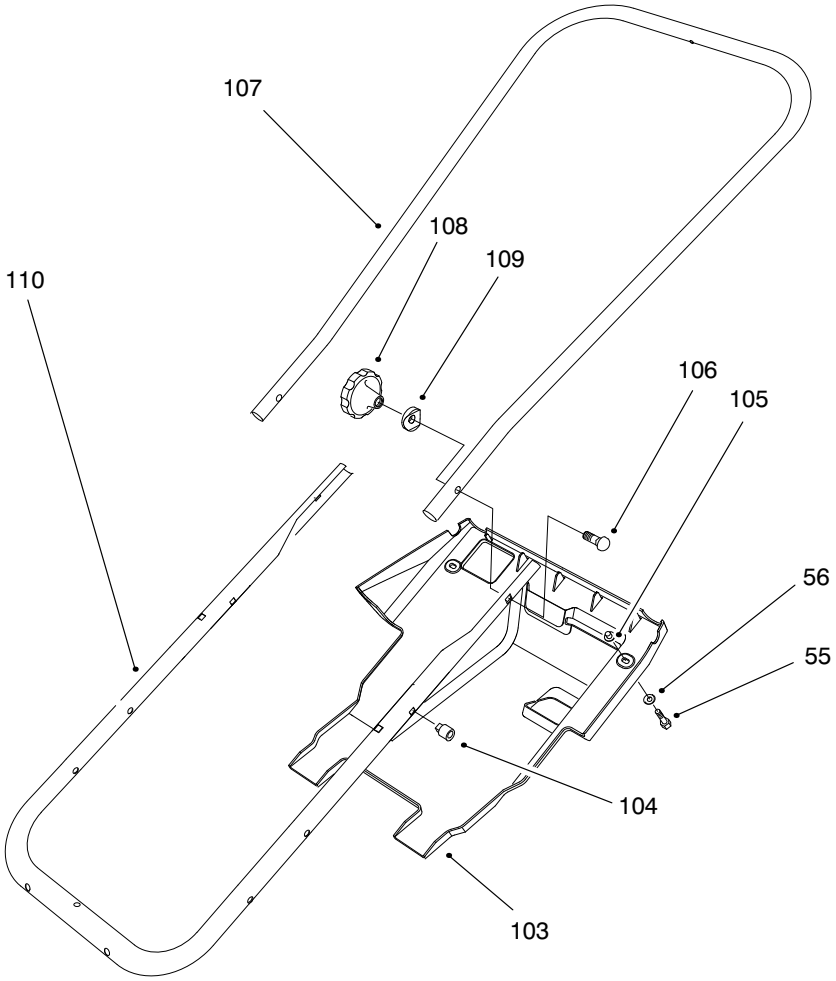

Sheet No.:5

Handle Assembly

Ref. No.	Part No.	Qty.	Description
55	32144–34	2	Screw–Hex Slot
56	3256–14	2	Washer–Flat
103	75–8790	1	Shroud–Lower
104	32115–17	2	Nut–Expansion
105	605120	2	Grommet
106	17–9426	2	Screw
107	75–9070	1	Handle–Upper
108	19–4050	2	Knob
109	75–9130	2	Washer–Pin
110	75–9060	1	Tube–Frame

Ref. No.	Part No.	Qty.	Description

Engine Tecumseh Model No. HSK600 Type 1680T

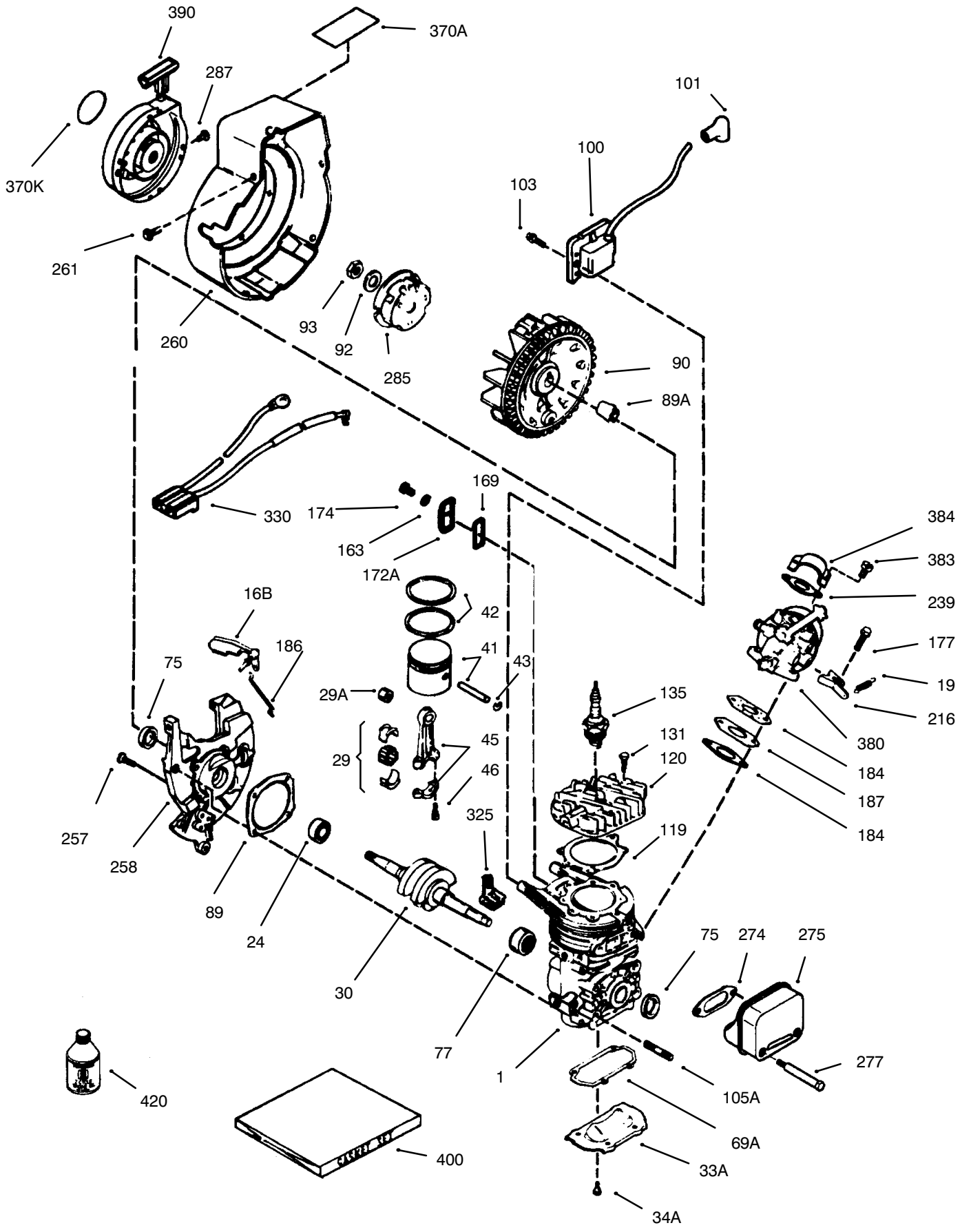

Engine Tecumseh Model No. HSK600 Type 1680T

Ref. No.	Part No.	Description	No. Used
1		Block Ass'y − Cylinder (Order short block if replacement is required)	1
16B	490291A	Vane Ass'y − Air	1
19	570707	Spring − Governor	1
24	530110	Bearing − Ball	1
29	530150	Bearing & Liner Set − Needle (37 Needles)	1
29A	530104A	Bearing − Cartridge	1
30	290602	Crankshaft	1
33A	570644	Plate − Cover	1
3A4	650579	Screw − Pan Flex Hd.	4
41	310283A	Piston & Pin Ass'y (Incl. ref. #43)	1
42	310190	Ring Set − Piston	1
43	310167	Ring − Piston Pin Retaining	2
45	310235B	Rod Ass'y − Connecting (Incl. ref. #29, 29A & 46)	1
46	650633	Screw − Connecting Rod	2
69*	510292A	Gasket − Cylinder Cover	1
69A*	510323A	Gasket − Cover Plate	1
75	510319	Seal − Oil	2
77	530105	Bearing − Needle	1
89A	611032	Sleeve − Flywheel	1
90	611066	Flywheel	1
92	650815	Washer − Belleville	1
93	650390	Nut − Flywheel	1
100	34443A	Solid State Ass'y (Incl. Ref. #101)	1
101	610118	Cover − Spark Plug	1
103	651007	Screw − Hex. Hd. Sems	2
105A	650796	Stud − Cylinder	4
119	*510274A	Gasket − Cylinder Head	1
120	250240B	Head − Cylinder	1
131	650477	Screw − Pan Flex Hd.	5
135	611049	Plug − Spark (RCJ−8Y or equivalent)	1
163	650838	Washer − Flat	1
169*	510325A	Gasket − Cover	1
172A	570708	Cover Ass'y − Compression Release	1
174	650579	Screw − Torx. Hd.	1
177	650959	Screw	2
184*	510326A	Gasket − Carburetor	2
186	490322	Link − Governor	1
187	570438A	Spacer	1
216	570645	Level − Adjusting	1
239	35815	Gasket − Filter Base	1
257	650911	Screw − Torx Pan Hd.	4
258	350422	Base Ass'y − Blower Housing (Incl ref. #27)	1
260	350437	Housing − Blower	1
261	650737	Screw − Hex. Washer Hd.	3
274*	510207A	Gasket − Exhaust	1
275	390332	Muffler (Incl. Ref. #274 & 277)	1
277	650869	Screw − Torx Pan Hd.	2
285	590551A	Cup − Starter	1
287	650926	Screw	3
325	29443	Clip − Spring	1
330	611131A	Harness − Wire	1
370A	36261	Decal − Lubrication	1
370K	36695	Decal − Starter	1
380	640086	Carburetor (Incl. ref. #184)	1
383	570434	Baffle − Air	1
384	650431	Screw − Pan Hd. Sems	2
390	590743	Starter Ass'y − Rewind	1
400	510324B	Gasket Set	1
422	730227A	Oil − 2 Cycle (8 oz.)	1

* Parts included in gasket set No. 400

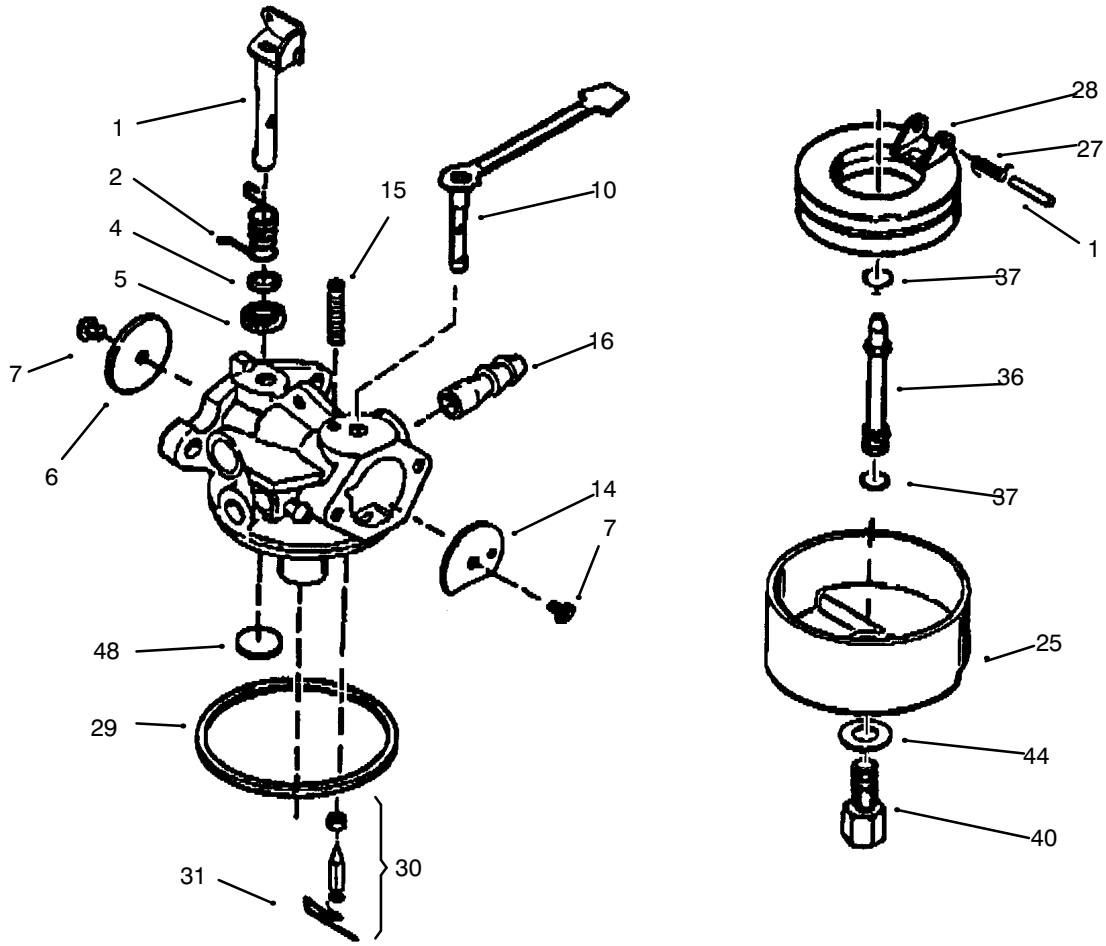

Carburator No. 640086

Ref. No.	Part No.	Description	No. Used
1	632166A	Throttle Shaft & Lever Assy.	1
2	632169	Spring − Throttle Return	1
4	631184	Washer − Steel	1
5	631183	Washer − Felt	1
6	631621	Shutter − Throttle	1
7	650506	Screw − Shutter	2
10	632553	Choke Shaft & Lever Assy.	1
14	631815	Shutter − Choke	1
15	630735	Spring − Choke Positioning	1
16	632164	Fitting − Fuel Inlet	1
25	631700	Bowl − Float	1
26	632386	Spring − Float Shaft	1

Ref. No.	Part No.	Description	No. Used
27	631024	Shaft − Float	1
28	632019	Float − Carburetor	1
29	631028	Seal − O−Ring	1
30	631021	Inlet Needle, Seat & Clip (Incl. ref. #31)	1
31	631022	Clip − Spring	1
36	640080	Nozzle − Main	1
37	632547	O−Ring	2
40	640087	Nut − Float Bowl	1
44	27110	Washer − Bowl	1
48	631027	Plug − Welch	1

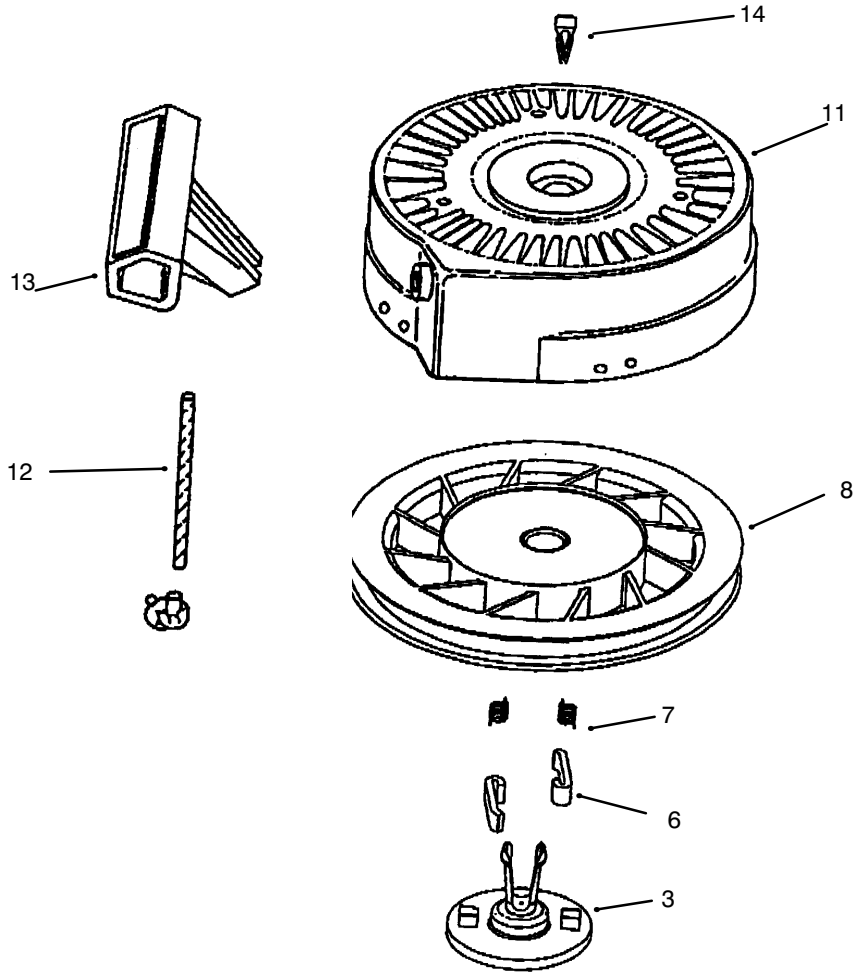

Recoil Starter No. 590743

Ref. No.	Part No.	Description	No. Used
3	590740	Retainer	1
6	590616	Dog − Starter	2
7	590617	Spring − Dog	2
8	590645A	Pulley & Rewind Spring Asm	1

Ref. No.	Part No.	Description	No. Used
11	590643	Starter Housing Assembly	1
12	590535	Rope − Starter	1
13	590701	Handle − Starter	1
14	590741	Tab − Locking	1

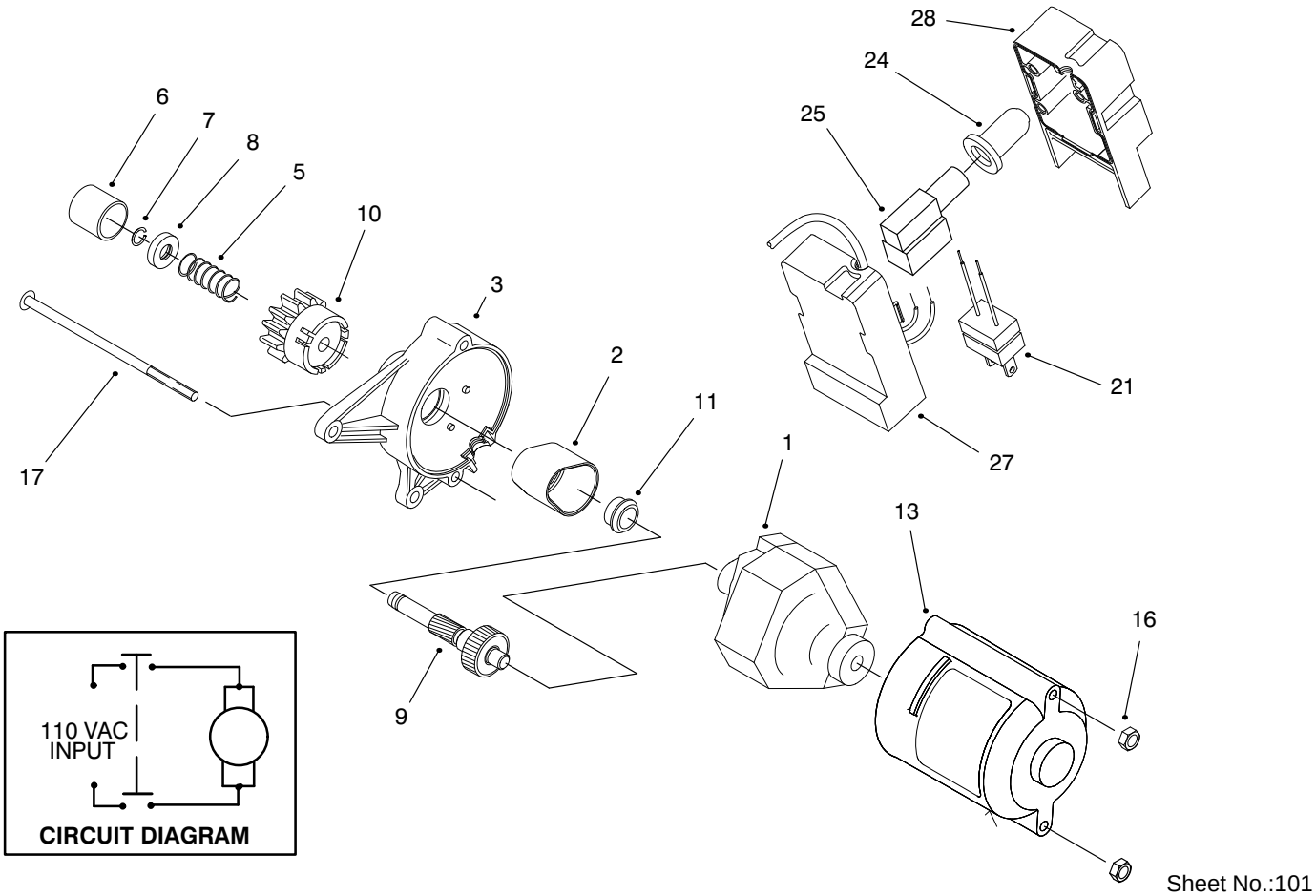

Sheet No.:101

Starter Motor & Switch Housing

Ref. No.	Part No.	Qty.	Description
1	70–7802	1	ASM–Motor
2	70–7850	1	Cover–Gear
3	70–7810	1	Housing–Starter
5	61–4690	1	Spring–Anti Drift
6	70–7890	1	Cap–Pinion
7	61–4680	1	Ring–Lock
8	61–4670	1	Stop–Pinion
9	92–6003	1	ASM–Shaft & Gear
10	84–5240	1	Pinion–12t
11	70–7900	1	Bushing–Upper
13	70–7820	1	Housing–Lower
16	3296–2	2	Nut Lock
17	32144–101	2	Screw–PPH
21	94–9933	1	Plug–Power
24	36–8350	1	Boot–Switch
25	36–8340	1	Switch–Starter
27	80–3730	1	Base–Switch Housing
28	80–3740	1	Cap–Switch Housing

Ref. No.	Part No.	Qty.	Description

Toro Part Number Index

Part No.	Page No.	Ref. No.	Qty.	Description
3−7501	3	77	2	Washer−Curved
3−7501	4	77	2	Washer−Curved
605120	5	105	2	Nut−Push
17−9426	5	106	2	Screw
19−4050	5	108	2	Knob
23−3250	4	80	2	Wheel
23−7470	2	38	1	Guide−Rope
25−5640	1	20	1	Washer
27−0062	4	101	1	Axle
36−8340	10	25	1	Switch−Starter
36−8350	10	24	1	Boot−Switch
38−7820	3	70	2	Bearing−Ball
40−5940	2	32	1	Switch−Key
44−2750	2	31	1	Body−Primer
44−3173	2	74	1	Hose−Primer
46−8094	1	1	3	Screw−TAP
46−8094	2	1	4	Screw−TAP
46−8094	4	1	3	Screw−TAP
49−1490	2	33	2	”j” Nut
49−2483	4	90	1	Hose−Fuel
55−3573	2	39	1	ASM−Gas Cap
61−4670	10	8	1	Stop−Pinion
61−4680	10	7	1	Ring−Lock
61−4690	10	5	1	Spring−Anti Drift
63−8360	2	37	1	Key−Ignition
66−7460	2	34	1	Bulb−Primer
70−7802	10	1	1	ASM−Motor
70−7810	10	3	1	Housing−Starter
70−7820	10	13	1	Housing−Lower
70−7850	10	2	1	Cover−Gear
70−7890	10	6	1	Cap−Pinion
70−7900	10	11	1	Bushing−Upper
71−5050	1	13	1	Body−Half Sheave
71−5060	1	10	1	Cap−Half Sheave
71−5260	1	2	1	Pulley−Idler
71−5290	1	15	2	Plate−Engine
75−8650	2	54	1	Retainer−Chute
75−8660	2	29	1	Housing
75−8670	2	51	1	Handle−Chute
75−8690	3	69	1	Nut−Rotor Shaft
75−8700	1	26	1	Bushing−Idler
75−8710	3	73	1	Spacer
75−8720	1	12	1	Pin−Idler
75−8740	1	21	1	Hub
75−8750	1	23	1	Pulley
75−8760	2	44	1	Chute−Discharge
75−8770	2	47	1	Deflector−Chute
75−8780	3	57	1	Scraper
75−8790	5	103	1	Shroud−Lower
75−8800	2	30	1	Shroud−Upper
75−8810	1	17	1	Sideplate−LH
75−8820	4	99	1	Sideplate−RH
75−8830	1	6	1	Cover−Belt
75−8840	3	66	1	Rotor
75−8870	1	14	1	Bracket−Cover
75−8880	3	65	2	Support−Motor
75−8900	4	98	1	Bracket−Wheel
75−8910	4	102	1	Bracket−Wheel
75−8980	4	92	1	Support−Engine
75−9010	1	22	1	”v” Belt
75−9020	1	16	1	Spring−Extension
75−9030	2	78	1	Panel−Control

*Not Illustrated

Toro Part Number Index (cont.)

Part No.	Page No.	Ref. No.	Qty.	Description
75−9040	3	62	2	Washer−Square
75−9050	1	27	1	Arm−Idler
75−9060	5	110	1	Tube−Frame
75−9070	5	107	1	Handle−Upper
75−9080	3	67	2	Flange Bearing
75−9100	4	91	1	Bushing−Isolation
75−9130	5	109	2	Washer−Pin
75−9160	2	53	1	Detent−Chute
75−9170	2	52	2	Spring−Compression
75−9180	3	68	1	Washer−Rubber
77−0402	4	83	1	ASM−Switch Housing
80−0650	4	94	1	Spacer−Mount
80−0690	2	120	1	Decal−Powerlite E
80−0700	4	82	2	Screw−HH Tork
80−3730	10	27	1	Base−Switch Housing
80−3740	10	28	1	Cap−Switch Housing
84−1970	3	71	8	Screw−Countersunk
84−1980	3	72	2	Blade−Rotor
84−5240	10	10	1	Pinion−12t
84−5430	2	141	1	Decal−Panel
92−6003	10	9	1	ASM−Shaft & Gear
92−6012	4	115	1	ASM−Bracket & Stud
92−6031	4	148	A/R	Screw
94−2789	4	112	3	Screw−Thread Forming
94−9933	10	21	1	Plug−Power
95−1903	4	93	1	Ring−Isolator
95−1904	1	7	1	Decal−Hot
95−1905	2	43	2	Washer−Rubber
233−67	2	42	1	Knob
2412−91	4	86	1	Clamp−Cable
2412−98	4	88	2	Clamp−Hose
250−7	4	85	1	Tie−Cable
321−3	2	59	2	Screw−HH
321−3	3	59	3	Screw−HH
321−10	4	81	4	Screw−HH
3229−5	3	63	2	Screw−CARR
3229−11	2	50	1	Bolt−CARR
3230−2	2	45	2	Screw−CARR
3230−23	1	19	1	Screw−CARR
3234−33	3	61	7	Screw−HFW
3235−6	1	8	1	Screw−HH
3250−32	2	75	2	Screw−PPH
3255−10	4	149	A/R	Washer−Lock
3256−1	1	5	2	Washer−Flat
3256−1	2	5	4	Washer−Flat
3256−1	4	5	6	Washer−Flat
3256−14	1	56	1	Washer−Flat
3256−14	3	56	3	Washer−Flat
3256−14	4	56	1	Washer−Flat
3256−14	5	56	2	Washer−Flat
3256−25	1	24	1	Washer−Flat
3256−58	4	95	1	Washer−Flat
3256−68	2	48	2	Washer−Flat
3256−71	1	9	1	Washer−Flat
3256−81	2	41	2	Washer−Flat
3257−3	1	18	1	Key−Woodruff
3290−320	4	79	2	Nut−Push
3290−340	2	46	2	Washer−Spring
3296−2	1	100	1	Nut Lock
3296−2	4	100	1	Nut Lock
3296−2	10	16	2	Nut Lock
3296−16	4	96	1	Nut−Lock

*Not Illustrated

Toro Part Number Index (cont.)

Part No.	Page No.	Ref. No.	Qty.	Description
3296−29	1	11	5	Nut−Lock
3296−29	2	11	2	Nut−Lock
3296−38	1	25	1	Nut−Lock
3296−42	2	60	2	Nut−Lock
3296−42	3	60	2	Nut−Lock
3296−42	4	60	4	Nut−Lock
3296−56	2	64	2	Nut−Hex Lock
3296−56	3	64	12	Nut−Hex Lock
3296−59	1	3	1	Nut−Lock
32105−23	1	28	1	Screw−HH
32105−23	4	28	1	Screw−HH
32115−15	2	49	3	Retainer
32115−17	5	104	2	Nut−Expansion
32115−19	3	58	3	”u” Nut
32144−4	1	4	4	Screw−TAP
32144−27	4	89	2	Screw
32144−34	3	55	3	Screw−Hex Slot
32144−34	5	55	2	Screw−Hex Slot
32144−53	2	36	2	Screw−Tf Acorn Hd
32144−89	2	76	2	Screw−HH
32144−101	10	17	2	Screw−PPH

*Not Illustrated

MAINTENANCE RECORD

Date								