FORM NO. 3319–482 REV. A

CCR3000R SNOWTHROWER
CCR3000R INT'L SNOWTHROWER
CCR3000E SNOWTHROWER
CCR3000E INT'L SNOWTHROWER

Model No. 38430 – 8900001 & Up
Model No. 38431 – 8900001 & Up
Model No. 38435 – 8900001 & Up
Model No. 38436 – 8900001 & Up

Parts Catalog

ORDERING REPLACEMENT PARTS

To order replacement parts, please supply: the part number, the quantity, and the description of each part desired.

Contents

Description	Page
Housing Assembly	1
Pulley & Side Plate Assembly	2
Discharge Chute & Deflector Assembly	3
Rotor Assembly	4
Engine & Frame Assembly	5
Engine & Frame Assembly	6
Shroud Assembly	7
Shroud Assembly	8
Handle Assembly	9
Engine Assembly (Model No. 38430, & 38431)	10
Engine Assembly (Model No. 38430, & 38431)	11
Engine Assembly (Model No. 38430, & 38431)	12
Engine Assembly (Model No. 38430, & 38431)	13
Engine Assembly (Model No. 38430, & 38431)	14
Engine Assembly (Model No. 38430, & 38431)	15
Engine Assembly (Model No. 38435, & 38436)	16
Engine Assembly (Model No. 38435, & 38436)	17
Engine Assembly (Model No. 38435, & 38436)	18
Engine Assembly (Model No. 38435, & 38436)	19
Engine Assembly (Model No. 38435, & 38436)	20
Engine Assembly (Model No. 38435, & 38436)	21
Starter Motor Assembly (Model No. 38435, & 38436)	22

Note:

Accessories

Description	Model / Parts No.
Snow Cab Kit	Part No. 88–0600

Part Description Abbreviations

Part descriptions in this catalog may include the following abbreviations.

Abbreviation	Meaning
AR	as required
ASM	assembly
CARR	carriage
DEG	degrees
FH	flat head
GA	gauge
HF	hex flange
HFW	hex flange washer
HH	hex head
HHF	hex head flange
HHST	hex head self tapping
HJ	hex jam
HOC	height-of-cut
HS	hex socket
HSBH	hex socket button head
HSFH	hex socket flat head
HSH	hex socket head
HWH	hex washer head
HWHTF	hex washer head thread forming
INC	incorporated
LH	left hand
PH	pan head
PPH	Phillips pan head
PTO	power take off
RH	right hand
SFH	slotted fillister head
SH	square head

© The TORO Company — 1997
All Rights Reserved

SHWH . . . . . slotted hex washer head
SPH . . . . . slotted pan head
STD . . . . . standard
TAP . . . . . self tapping
TH . . . . . truss head
TTH . . . . . Torx truss head
WH . . . . . wing head

Important Format Explanations

This catalog uses special formats to convey information in illustrations and parts lists. Specifically, one format is used in conjunction with service assemblies and another with quantities associated with reference numbers.

Service Assemblies

Parts within service assemblies have reference numbers in the form *X:Y. X* is the reference number of the service assembly and *Y* is a sequential number unique to each part within the service assembly.

For example, a wheel assembly might be identified by reference number 6, the tire by 6:1, the valve by 6:2, and the wheel by 6:3. When you order the assembly identified by reference number 6, you receive all parts identified by reference numbers 6:1, 6:2, and 6:3. However, you may also order any part individually.

Reference numbers of this type appear in part lists and as callouts in illustrations.

Reference Numbers with Quantities

Illustrations may have a quantity in parentheses next to a reference number, in the form *X (Y). X* is the reference number. *Y* in parentheses is the quantity of the part identified by the reference number.

For example, the illustration callout 4 (2) indicates that two parts are used in that instance.

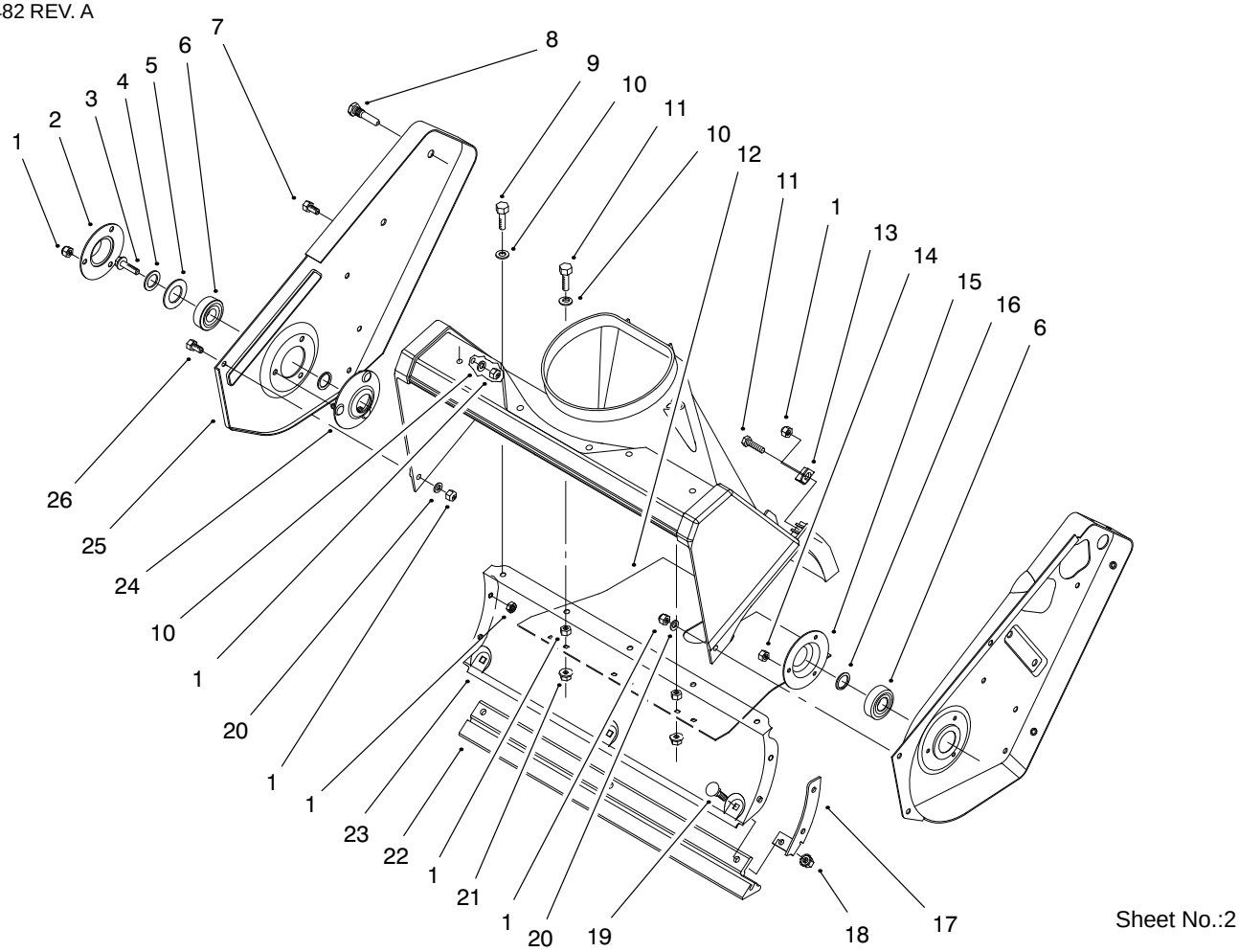

Sheet No.:2

Housing Assembly

Ref. No.	Part No.	Qty.	Description
1	3296–42	16	Nut–Lock
2	52–7290	1	Retainer–Bearing
3	3234–25	1	Bolt–Flange
4	3256–24	1	Washer–Flat
5	52–7270	1	Washer–Rubber
6	38–7820	2	Bearing–Ball
7	322–43	1	Screw–HH
8	38–8211	1	Pin
9	321–4	3	Screw–HH
10	3256–22	7	Washer–Flat
11	321–6	3	Screw–HH
12	55–9512	1	Cover–Bottom
13	55–9430	1	”z” Bracket–Housing
14	3296–2	3	Nut Lock
15	38–8620	1	Retainer–Bearing
16	52–7280	2	Washer–Thrust
17	56–2610	1	Bracket–Housing
18	32149–2	3	Nut–Hex Lock
19	3229–11	3	Bolt–CARR
20	3256–67	2	Washer–Flat
21	32128–10	2	Nut–Lock HHF
22	55–8760	1	Scraper
23	55–9220–01	1	Wa–Housing
24	52–9110	1	Wa–Bearing Flange
25	55–8840	1	Sideplate–RH
26	32105–15	5	Screw–HH

Ref. No.	Part No.	Qty.	Description

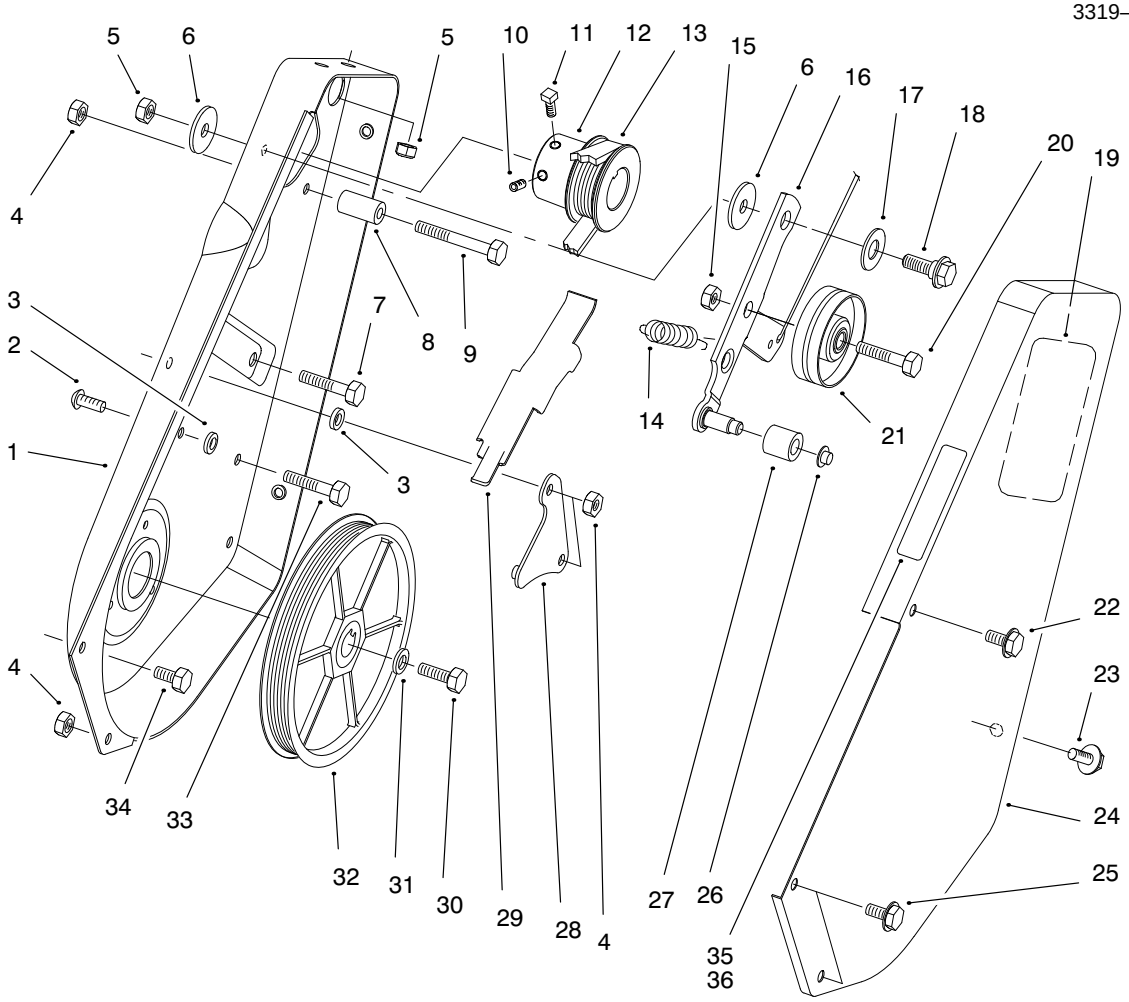

Sheet No.:3

Pulley & Side Plate Assembly

Ref. No.	Part No.	Qty.	Description
1	55–8851	1	Sideplate–LH
2	3274–31	1	Screw–HH
3	55–9620	4	Spacer
4	3296–42	5	Nut–Lock
5	3296–29	3	Nut–Lock
6	5–4460	2	Washer–Fender
7	322–3	2	Screw–HH
8	55–9530	1	Guide–Belt
9	321–13	1	Screw–HH
10	3245–41	1	Screw–Skt HH
11	3241–7	1	Screw–Sqh
12	55–9180	1	Pulley–Engine
13	55–9300	1	Belt–Drive
14	55–9280	1	Spring–Extension
15	32152–2	1	Nut–Lock HH
16	63–3610	1	ASM–Idler Arm
17	25–5640	1	Washer
18	27–0410	1	Bolt–Shoulder
19	60–9480	1	Decal–Routing
20	323–29	1	Screw–HH
21	55–9290	1	Pulley–Idler
22	36–3860	1	Screw–Pentaflo
23	12–3270	2	Screw–HH
24	16–9449	1	Cover–Drive
25	32105–15	2	Screw–HH
26	32112–11	1	Nut–Push

Ref. No.	Part No.	Qty.	Description
27	55–9520	1	Roller–Brake
28	55–9570	1	ASM–Pivot Plate
29	55–9550	1	Arm–Brake
30	321–30	1	Screw – HH
31	3290–456	1	Washer–Lock
32	60–9320	1	ASM–Pulley
33	321–4	2	Screw–HH
34	32105–8	3	Screw
35	95–1904	1	Decal–Hot (Model No. 38430, 38435)
36	94–2561	1	Decal–Hot (Model No. 38431, 38436)

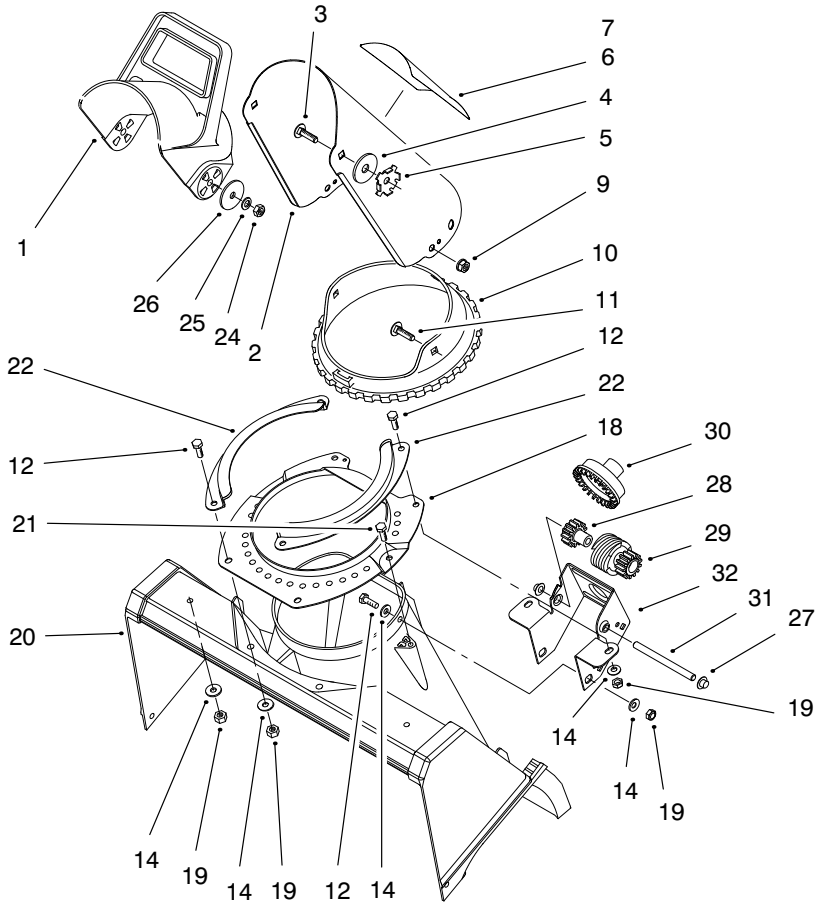

Sheet No.:4

Discharge Chute & Deflector Assembly

Ref. No.	Part No.	Qty.	Description
1	56–2680	1	Deflector
2	94–2790	1	ASM–Chute & Decal(Serv) (Model No. 38430, 38435)
2	94–2791	1	ASM–Chute & Decal(Serv) (Model No. 38431, 38436)
3	3230–22	2	Screw–CARR
4	20–4320	2	Washer–Rubber
5	55–8950	2	Plate–Friction
6	94–2900	1	Decal–Danger
7	94–2901	1	Decal–Danger
9	32149–1	3	Nut–Keps
10	55–8720	1	Gear Ring–Chute
11	3230–18	3	Screw–CARR
12	321–4	6	Screw–HH
14	3256–22	8	Washer–Flat
18	55–8921	1	Ring–Chute Support
19	3296–42	8	Nut–Lock
20	55–8700	1	Housing
21	46–8092	2	Screw – Plastite
22	55–8910	2	Retainer–Chute Ring
24	3296–29	2	Nut–Lock
25	3290–456	2	Washer–Lock
26	3256–68	2	Washer–Flt
27	32112–11	2	Nut–Push

Ref. No.	Part No.	Qty.	Description
28	55–8750	1	Spacer–Spur Gear
29	55–8730	1	Gear–Worm/Spur
30	55–8740	1	Gear–Face
31	55–9150	1	Shaft–Worm
32	84–5650	1	Bracket–Chute Gear

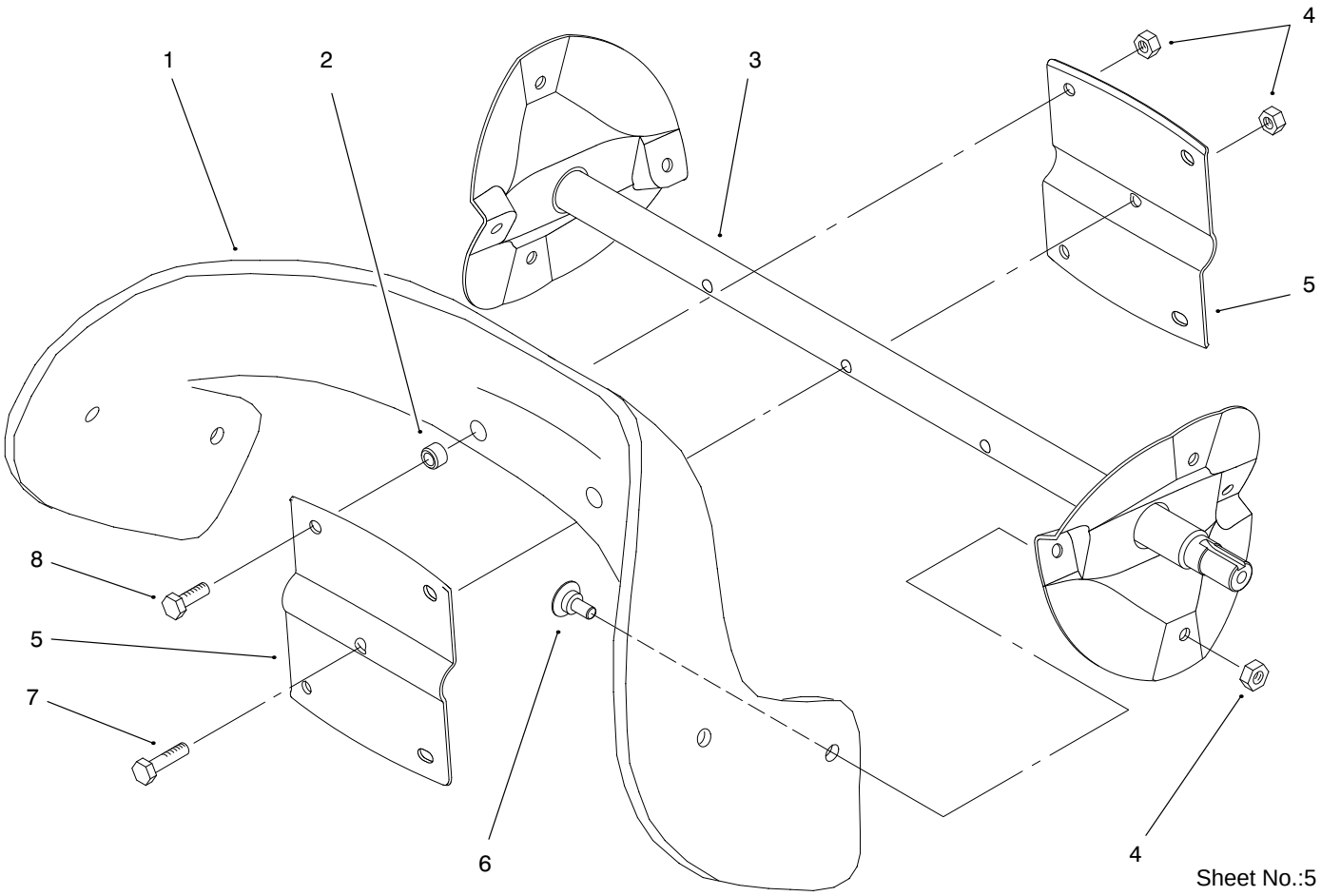

Sheet No.:5

Rotor Assembly

Ref. No.	Part No.	Qty.	Description
1	88–0771	2	Blade–Rotor
2	55–9370	4	Spacer–Rotor Blade
3	55–9202	1	Wa–Rotor
4	3296–56	12	Nut–Lock
5	66–6600	2	Rotor
6	84–1971	8	Screw–Counter Sunk Oval
7	321–8	1	Screw–HH
8	321–4	4	Screw–HH
*	28–9170	1	Cord–7 Ft

Ref. No.	Part No.	Qty.	Description

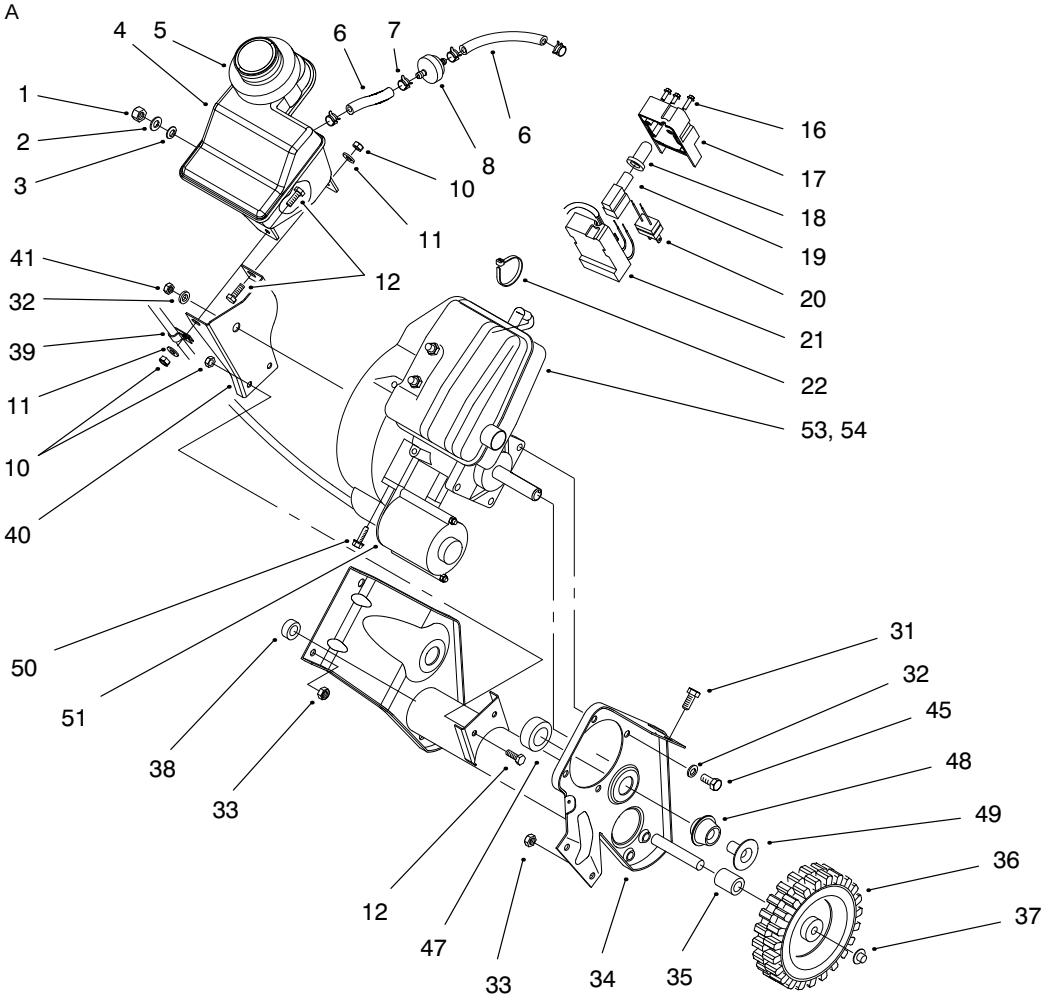

Sheet No.:6

Engine & Frame Assembly

Ref. No.	Part No.	Qty.	Description
1	32152–8	1	Nut – Top Deform
2	3256–23	1	Washer–Flat
3	237–89	1	Grommet
4	55–8831	1	Tank–Gas
5	55–9310	1	Seal–Tank
6	49–2481	2	Hose–Gas
7	2412–98	4	Clamp–Hose
8	56–6360	1	Filter–Fuel
10	3296–42	4	Nut–Lock
11	3256–22	2	Washer–Flat
12	321–4	4	Screw–HH
‡16	32144–27	3	Screw (Model No. 38435, 38436)
17	80–3740	1	Cap–switch Housing (Model No. 38435, 38436)
18	61–4810	1	Boot–Switch (Model No. 38435, 38436)
19	61–4820	1	Switch–Starter (Model No. 38435, 38436)
20	94–9933	1	Plug–Power (Model No. 38435, 38436)
21	80–3730	1	Base–Switch Housing (Model No. 38435, 38436)
22	250–4	1	Tie–Cable (Model No. 38435, 38436)

Ref. No.	Part No.	Qty.	Description
31	322–3	2	Screw–HH
32	3290–456	4	Washer–Lock
33	3296–29	3	Nut–Lock
34	63–3750	1	Wa–Frame
35	66–6501	1	Spacer–Wheel
36	66–6510	2	Wheel
37	32112–14	2	Pushnut
38	66–6500	1	Spacer–Wheel
39	2412–91	1	Clamp–Cable
40	55–9070–01	1	Support–Recoil
41	81–0300	1	Nut–HH
42	71–5320	1	Washer–Support
45	81–0570	4	Bolt–Eng Mtg
47	55–9450	2	Mount–Load
48	55–9460	2	Mount–Rebound
49	55–9470	2	Tube–Spacer
50	56–6380	1	Screw–Mtg (Model No. 38435, 38436)
51	84–5292	1	ASM–Starter Motor (Model No. 38435, 38436)
53	94–9890	1	Engine 2–Cyc Snow (Model No. 38430,38431)

‡ Obtain locally.

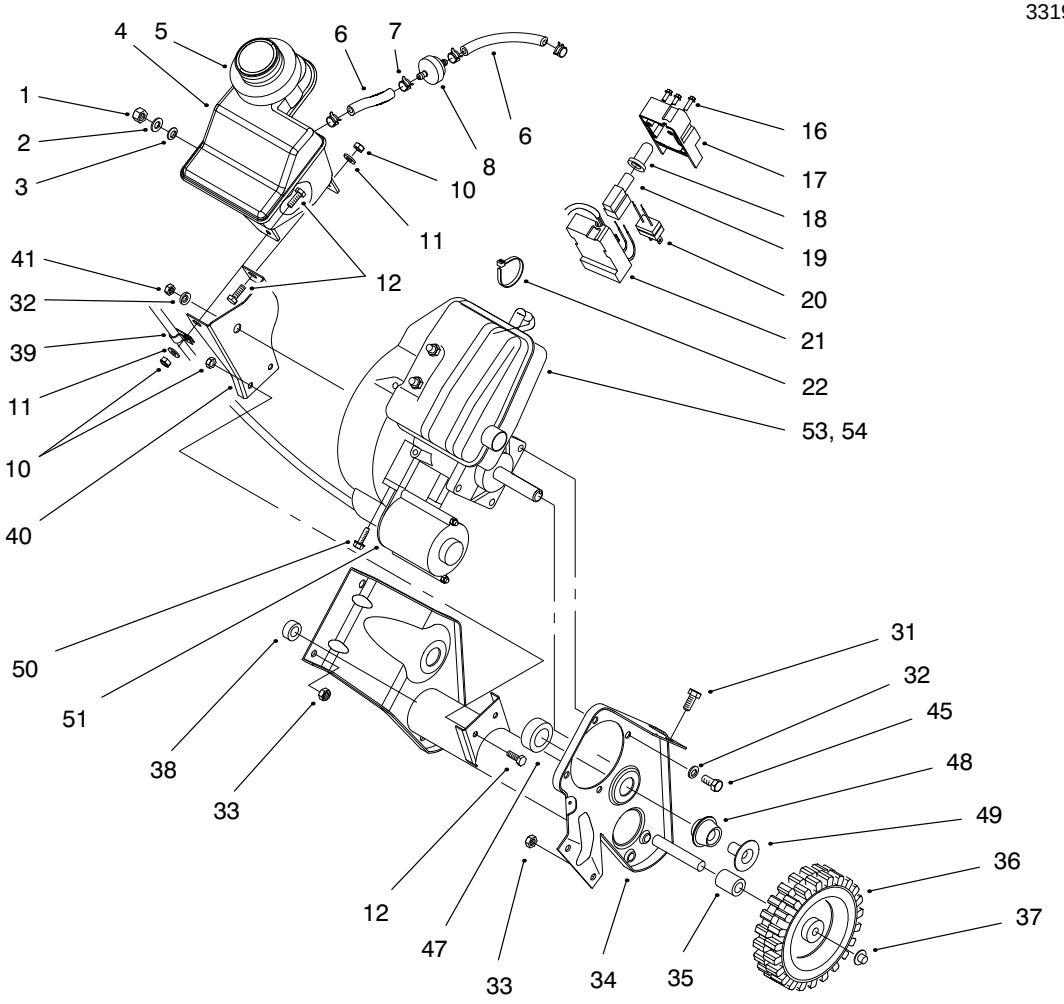

Sheet No.:6

Engine & Frame Assembly

Ref. No.	Part No.	Qty.	Description
54	94–9891	1	Engine 2–,Cyc Snow (Model No. 38435, 38436)

Ref. No.	Part No.	Qty.	Description

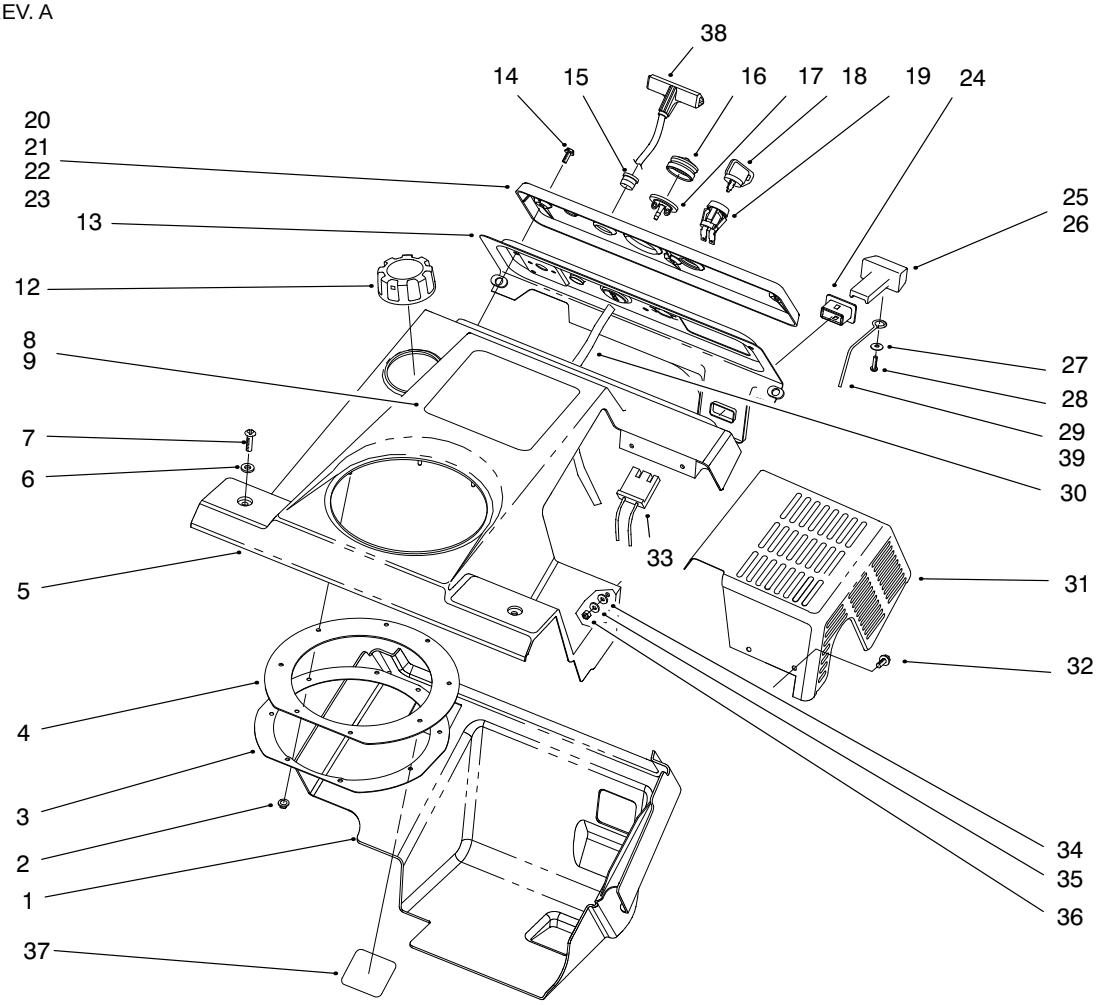

Sheet No.:7

Shroud Assembly

Ref. No.	Part No.	Qty.	Description
1	55–8791	1	Shroud–Lower
2	3290–474	8	Pushnut–Arched Round
3	55–9540–01	1	Retainer–Chute Seal
4	55–9260	1	Seal–Chute
5	94–9898	1	Upper Shroud/Decal ASM (Model No. 38430, 38431)
5	94–9899	1	Upper Shroud/Decal ASM (Model No. 38435, 38436)
6	3256–22	2	Washer–Flat
7	3250–32	2	Screw–PPH
8	94–8875	1	Decal–Ccr 3000e Gts (Model No. 38435, 38436)
9	94–8874	1	Decal–Ccr 3000 Gts (Model No. 38430, 38431)
12	55–3573	1	ASM–Gas Cap
13	55–9490–01	1	Wa–Panel
14	32144–112	3	Screw–Thd Form
15	55–9410	1	Guide–Starter Rope
16	66–7460	1	Bulb–Primer
17	44–2750	1	Body–Primer
18	63–8360	1	Key–Ignition

Ref. No.	Part No.	Qty.	Description
19	40–5940	1	Switch–Key
20	94–2569	1	Plate–Name (Model No. 38436)
21	55–9350	1	Name Plate–Control (Model No. 38430)
22	94–2570	1	Plate–Name (Model No. 38431)
23	61–4410	1	Nameplate–Control (Model No. 38435)
24	55–8820	1	Fitting–Choke Control
25	55–8811	1	Control–Choke Int'l (Model No. 38431, 38436)
26	55–8810	1	Control–Choke (Model No. 38430, 38435)
27	3256–49	1	Washer–Flat
28	32144–111	1	Screw – PPH
29	94–2797	1	Linkage–Choke
30	44–3174	1	Hose–Primer
31	55–9210	1	Wa–Shield
32	32105–8	4	Screw
33	218–532	1	Connector
34	55–9660	4	Washer–Rubber
35	3256–14	4	Washer–Flat
36	3296–12	4	Nut–Lock

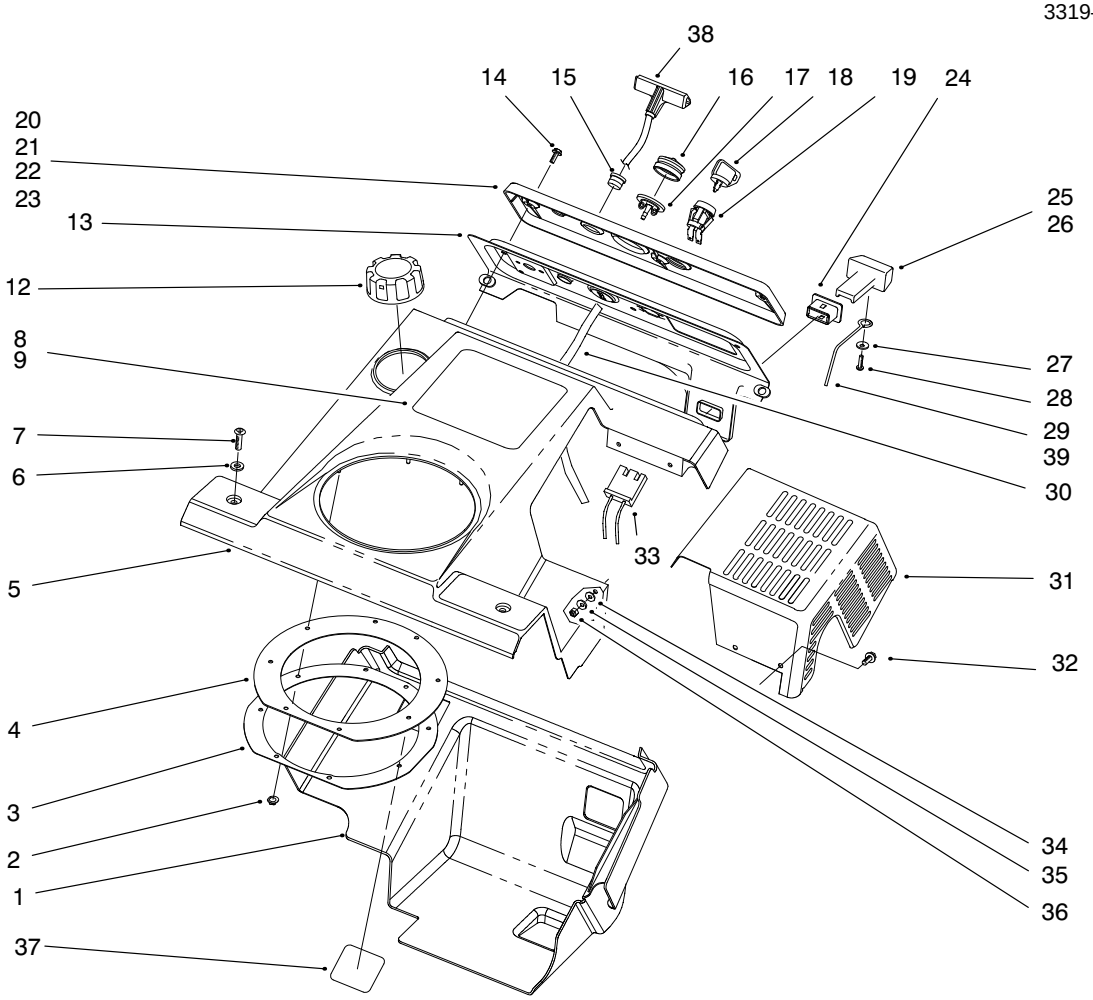

Sheet No.:7

Shroud Assembly

Ref. No.	Part No.	Qty.	Description
37	61–4790	1	Decal–,Warning (Csa) (E) (Model No. 38436)
38	92–4853	1	Handle–Starter
39	94–2798	1	Linkage–Choke (Model No. 38435, 38436)

Ref. No.	Part No.	Qty.	Description

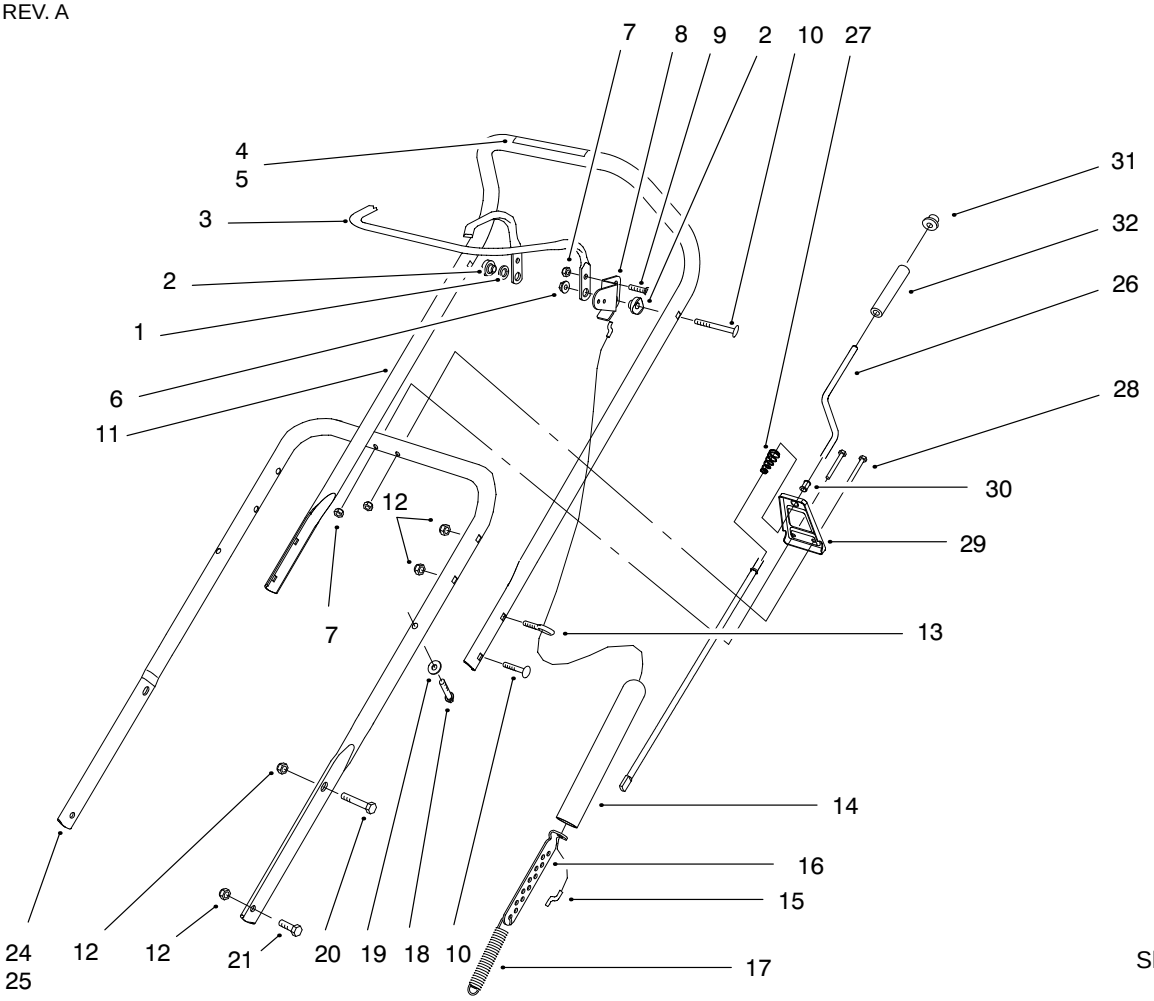

Sheet No.:8

Handle Assembly

Ref. No.	Part No.	Qty.	Description
1	55–9670	1	Washer–Rubber
2	55–9340	2	Spacer–Control Bar
3	55–9130	1	Bar–Control
4	66–6870	1	Decal–Rotor Drive (Model No. 38430, 38435)
5	94–2577	1	Decal–Rotor Drive (Model No. 38431, 38436)
6	32111–8	2	Nut Acorn
7	3296–42	3	Nut–Lock
8	55–9100–01	1	Arm–Clutch Cable
9	3274–31	1	Screw–HH
10	17–9424	5	Screw
11	94–2794	1	Upper Handle/Decal ASM (Model No. 38431, 38436)
11	95–2669	1	ASM–Handle (Model No. 38430, 38435)
12	3296–29	8	Nut–Lock
13	55–9420	1	Bolt – Eye
14	55–9390	1	Cover–Spring
15	55–9321	1	Cable–Clutch
16	55–9380	1	Adjuster–Clutch Cable
17	55–9270	1	Spring–Extension
18	61–8640	2	Screw – HH

Ref. No.	Part No.	Qty.	Description
19	3–7501	2	Washer–Curved
20	322–9	2	Screw–HH
21	322–3	2	Screw–HH
24	55–9121–01	1	Handle–Lower (Model No. 38430, 38435)
25	55–9120	1	Handle–Lower (Model No. 38431, 38436)
26	55–9140	1	Rod–Crank
27	55–9440	1	Spring–Compression
28	321–13	2	Screw–HH
29	55–9090	1	Support–Crank
30	256–249	1	Grommet–Nyliner
31	3290–320	1	Nut–Push
32	40–8230	1	Grip–Control

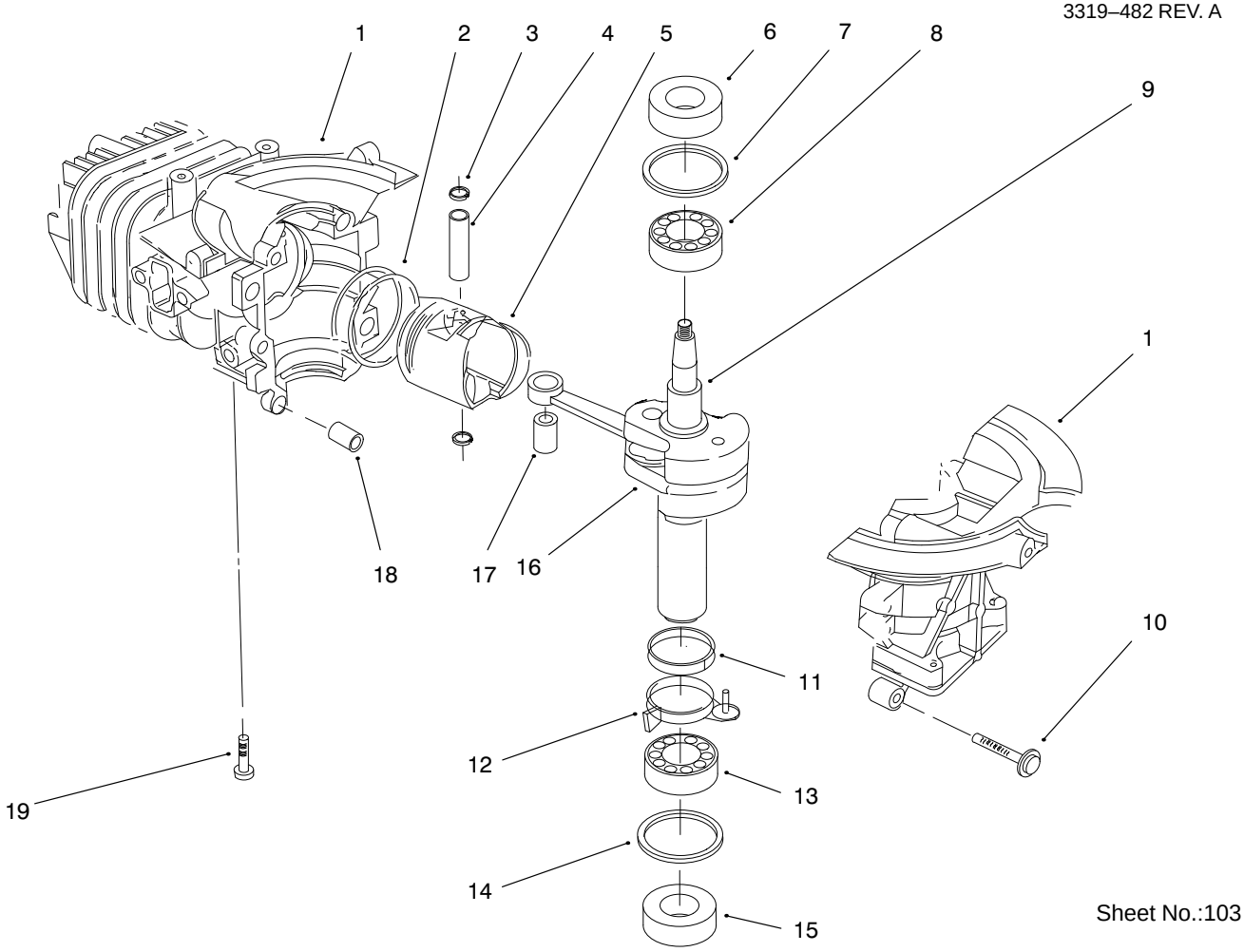

Sheet No.:103

Engine Assembly (Model No. 38430, & 38431)

Ref. No.	Part No.	Qty.	Description
1	95–7933	1	Cylinder/Crankcase ASM R
2	81–0590	1	Ring Set
3	81–0620	2	Circlip
4	81–0600	1	Pin–Wrist (12mm Dia)
5	81–2140	1	Piston (58mm)
6	81–0720	1	Oil Seal–Upper
7	81–0710	1	Thrust Washer–Upper
8	81–0690	1	Bearing–Upper (20mm)
9	81–5700	1	Crankshaft Conn Rod ASM
10	81–0540	5	Bolt
11	81–0770	1	Collar–Governor
12	81–0750	1	Centrifugal Bracket–Low
13	81–0700	1	Bearing–Lower (25mm)
14	81–0730	1	Thrust Washer–Lower
15	81–0740	1	Oil Seal–Lower
16	81–0760	1	Pin–Gov (3mm Dia X 5mm)
17	81–0610	1	Bearing–Wristpin
18	81–0520	2	Pin–Crankcase Dowel
19	81–0570	4	Bolt–Eng Mtg
*	94–9896	1	Engine–Short Block

Ref. No.	Part No.	Qty.	Description

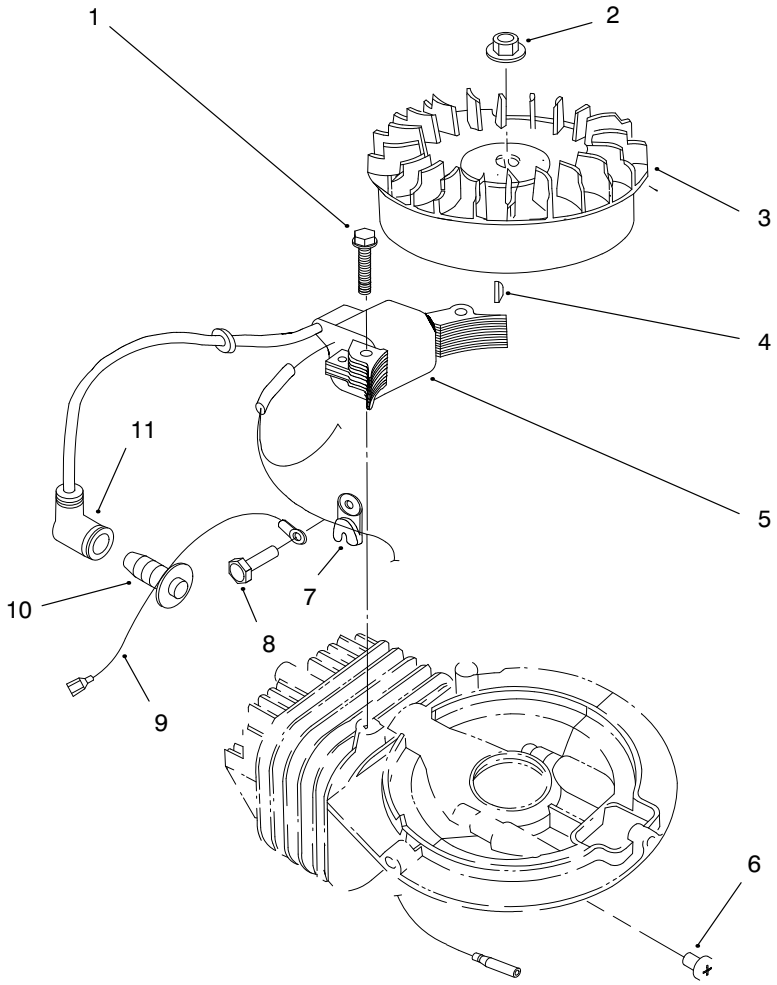

Sheet No.:104

Engine Assembly (Model No. 38430, & 38431)

Ref. No.	Part No.	Qty.	Description
1	81–5710	2	Screw SH
2	81–1330	1	Nut
3	81–0320	1	Flywheel
4	81–2370	1	Key–Flywheel (Aluminum)
5	94–8890	1	Coil ASM
6	81–0380	2	Screw
7	81–1480	1	Clamp–Magneto Wire
8	53–1340	1	Bolt
9	81–2860	1	Wire–Ground
10	50–1170	1	Spark Plug
11	81–1500	1	Cover–Spark Plug

Ref. No.	Part No.	Qty.	Description

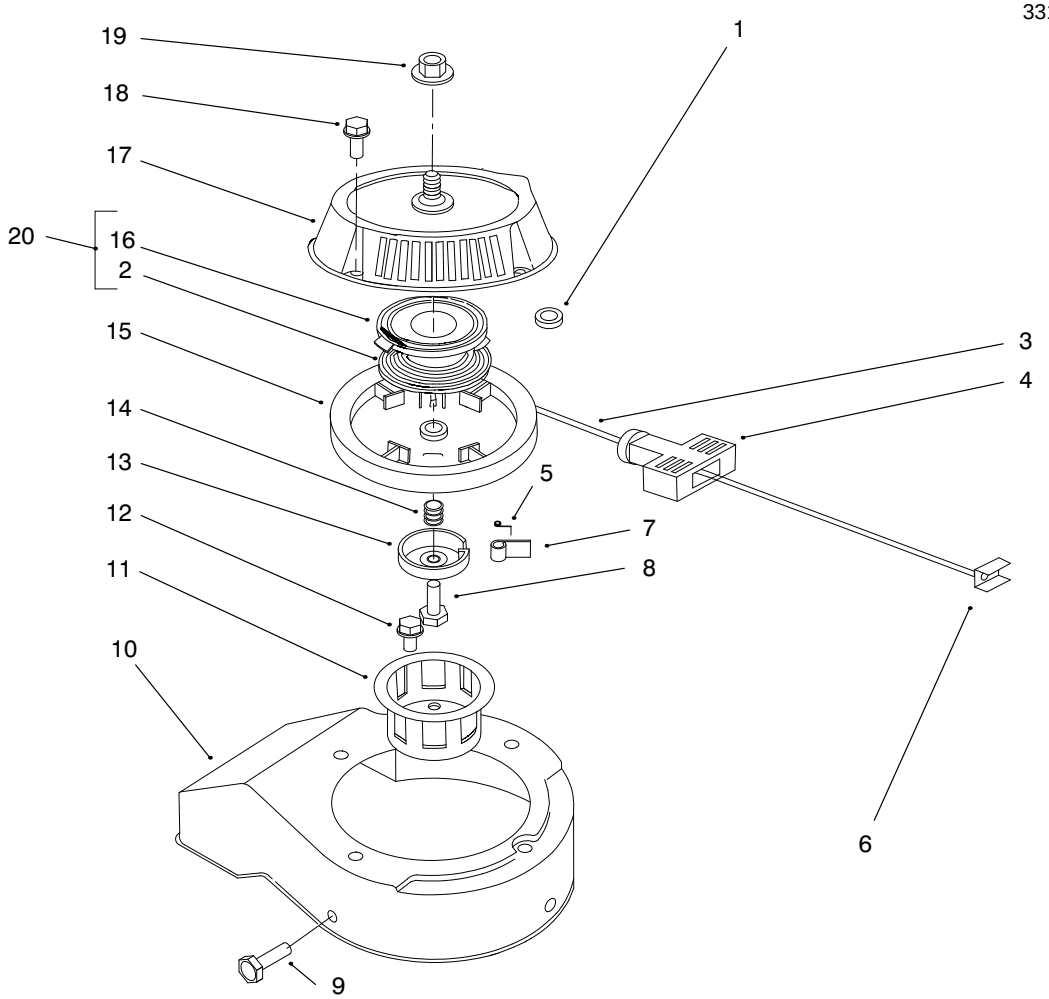

Sheet No.:105

Engine Assembly (Model No. 38430, & 38431)

Ref. No.	Part No.	Qty.	Description
1	55–9620	1	Spacer
2	81–1200	1	Spring–Recoil
3	81–2870	1	Rope (3.5mm X 2.3mm)
4	81–1630	1	Handle–Recoil
5	81–1220	1	Spring–Dog
6	81–5760	1	Insert–Recoil Handle
7	81–1230	1	Dog–Starter
8	81–1260	1	Bolt–Shoulder
9	53–1340	3	Bolt
10	81–0310	1	Shroud–Blower
11	81–1290	1	Cup–Starter
12	81–1300	3	Bolt
13	81–1250	1	Retainer–Dog
14	81–1240	1	Spring–Compression
15	81–1210	1	Reel–Rope Pulley
16	81–1640	1	Retainer–Recoil Spring
17	81–0290	1	Case–Recoil
18	81–0390	4	Bolt–HH 8mm
19	81–0300	1	Nut–HH 8mm
20	81–2300	1	Recoil Spring & Retain
*	81–0280	1	ASM–Recoil

Ref. No.	Part No.	Qty.	Description

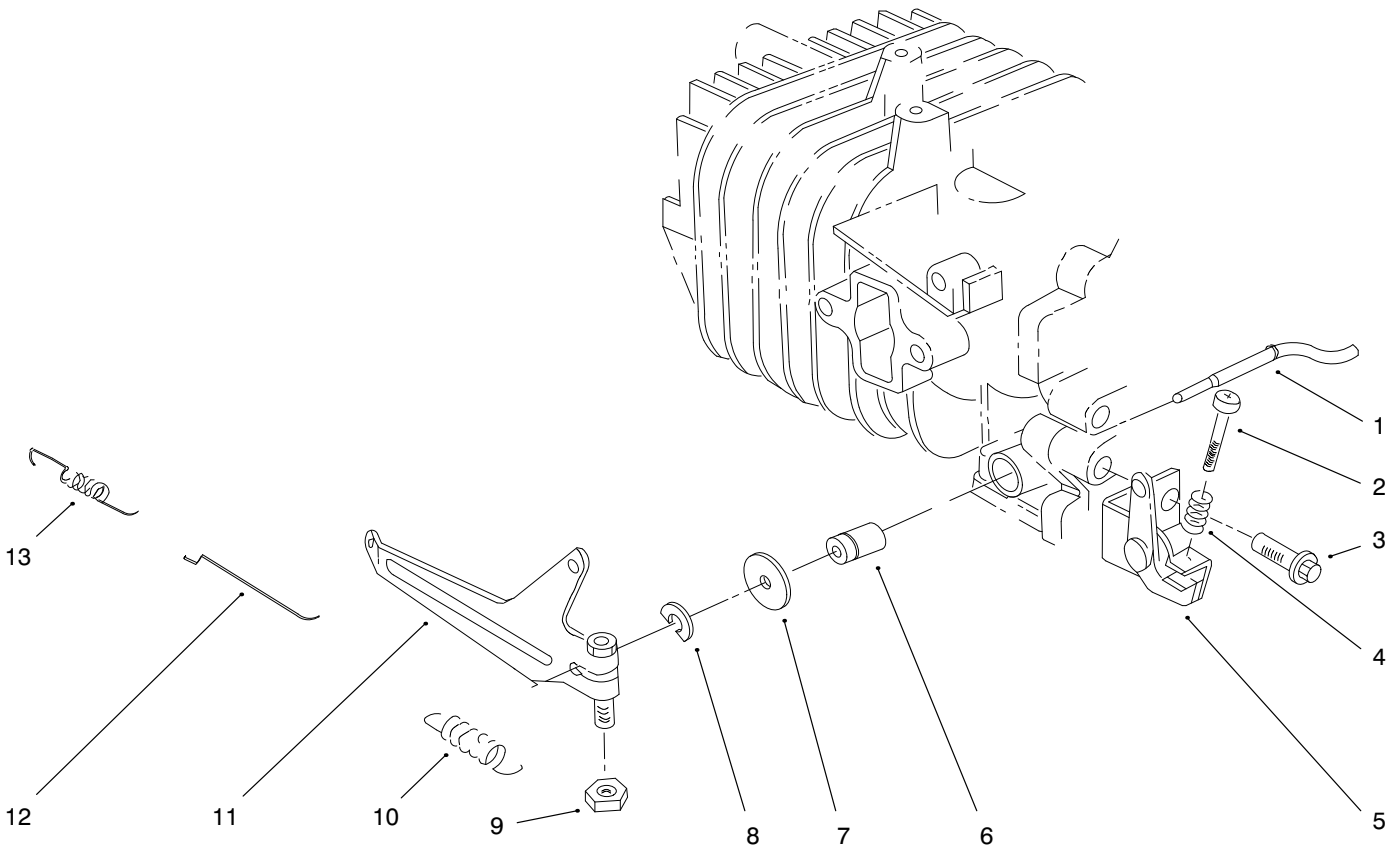

Sheet No.:106

Engine Assembly (Model No. 38430, & 38431)

Ref. No.	Part No.	Qty.	Description
1	81–2880	1	Shaft–Governor
2	81–2890	1	Screw
3	81–0540	1	Bolt
4	81–2900	1	Spring–Compression
5	81–0370	1	Bracket–Gov Spring
6	81–0850	1	Oil Seal–Gov Shaft
7	81–0860	1	Washer
8	81–0870	1	E–Ring
9	81–0900	1	Nut
10	81–0360	1	Spring–Governor
11	81–0410	1	Arm–Governor
12	81–0430	1	Rod–Carburetor
13	81–0440	1	Spring–Carb Rod

Ref. No.	Part No.	Qty.	Description

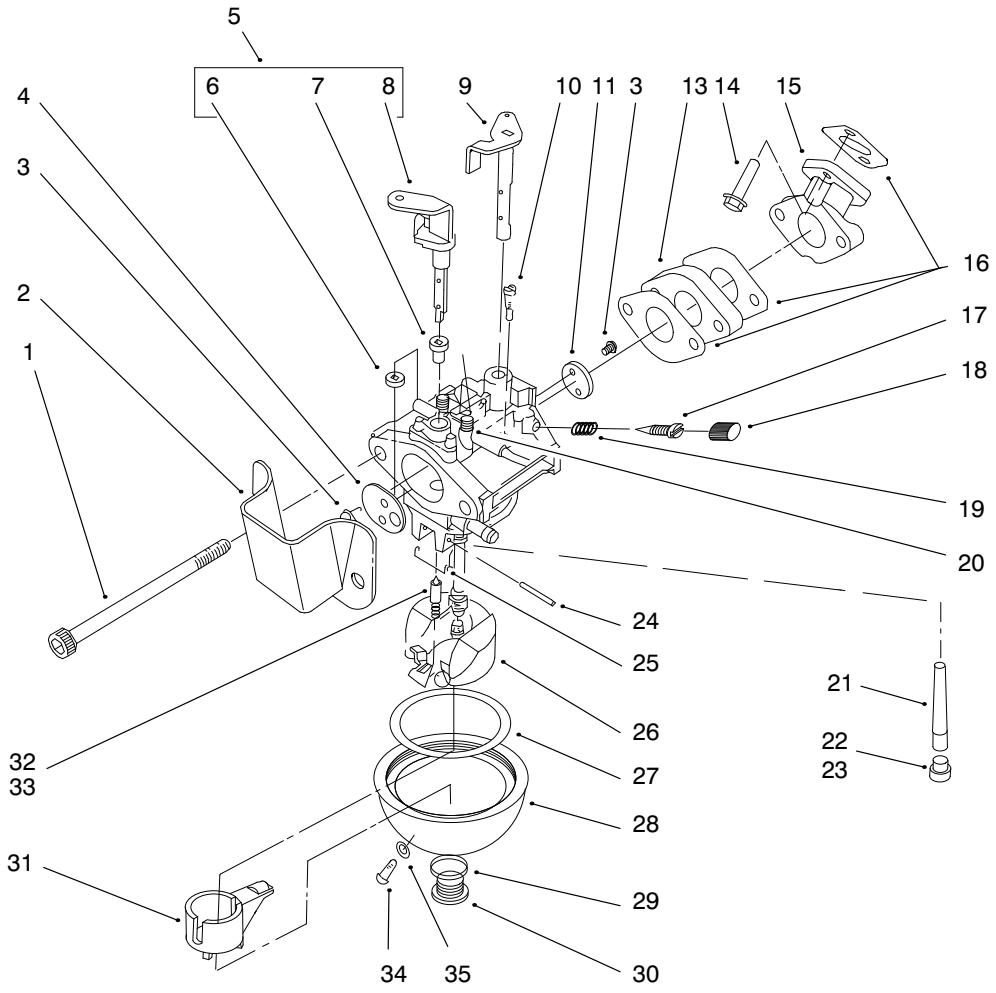

Sheet No.:107

Engine Assembly (Model No. 38430, & 38431)

Ref. No.	Part No.	Qty.	Description
1	81–0450	2	Bolt
2	81–2700	1	Spitcup
3	81–2710	4	Screw–Choke Valve
4	81–2720	1	Valve–Choke
5	81–2910	1	Shaft–Choke ASM
6	81–5530	1	Bushing–Lower Choke
7	81–5520	1	Bushing–Upper Choke
8	81–5510	1	Shaft–Choke
9	81–2920	1	Shaft–Throttle
10	95–7941	1	Jet – Pilot
11	81–2940	1	Valve–Throttle
13	81–0460	1	Insulator–Carburetor
14	50–6350	2	Bolt
15	81–0470	1	Manifold–Intake
16	81–2570	3	Gasket–Carburetor
17	95–7937	1	Aduster – Screw
18	95–7938	1	Cap – Adjuster
19	81–2580	2	Spring–Pilot Screw
20	81–2590	2	Sprint–Choke Detent
21	95–7936	1	Nozzle – Main
22	81–1040	1	Jet–Main (No. 80)
23	95–7940	1	Jet – Main
24	81–2600	1	Pin–Hinge
25	95–7939	1	Spring – Torsion
26	81–4920	1	Float
27	81–2630	1	Gasket–Float Bowl

Ref. No.	Part No.	Qty.	Description
28	81–2640	1	Bowl–Float
29	81–2650	1	Gasket–Bowl Screw
30	81–2660	1	Screw–Float Bowl
31	81–4930	1	Spacer–Float
32	81–4700	1	Needle
33	81–5820	1	Needle Valve Seat Kit
34	81–2670	1	Screw–Drain
35	81–2680	1	Gasket–Drain Screw
*	95–7935	1	Carburetor – ASM

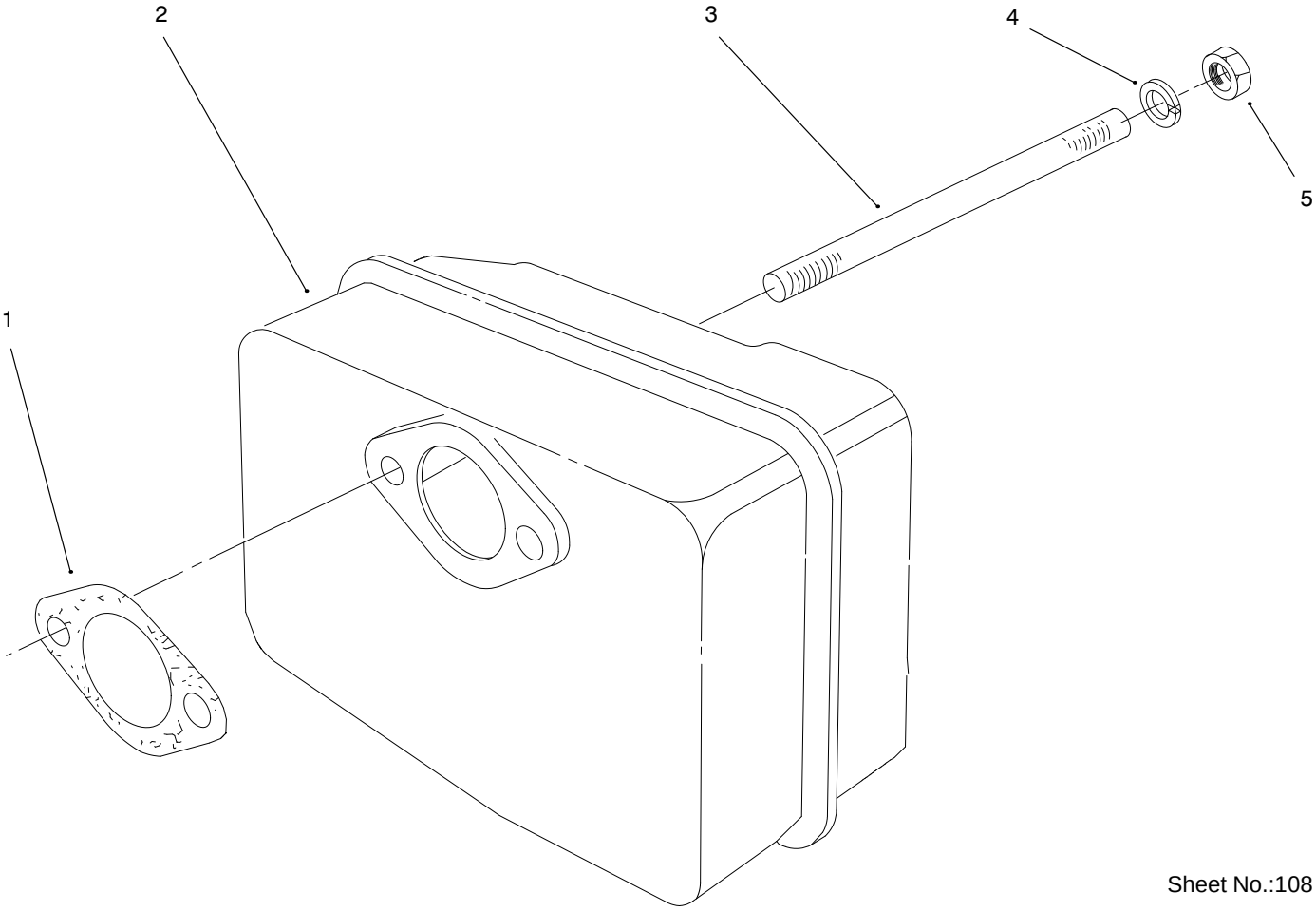

Sheet No.:108

Engine Assembly (Model No. 38430, & 38431)

Ref. No.	Part No.	Qty.	Description
1	81–1080	1	Gasket–Muffler
2	81–0490	1	Muffler
3	81–0500	2	Stud–Muffler
4	81–1120	2	Washer–Lock
5	81–1110	2	Nut

Ref. No.	Part No.	Qty.	Description

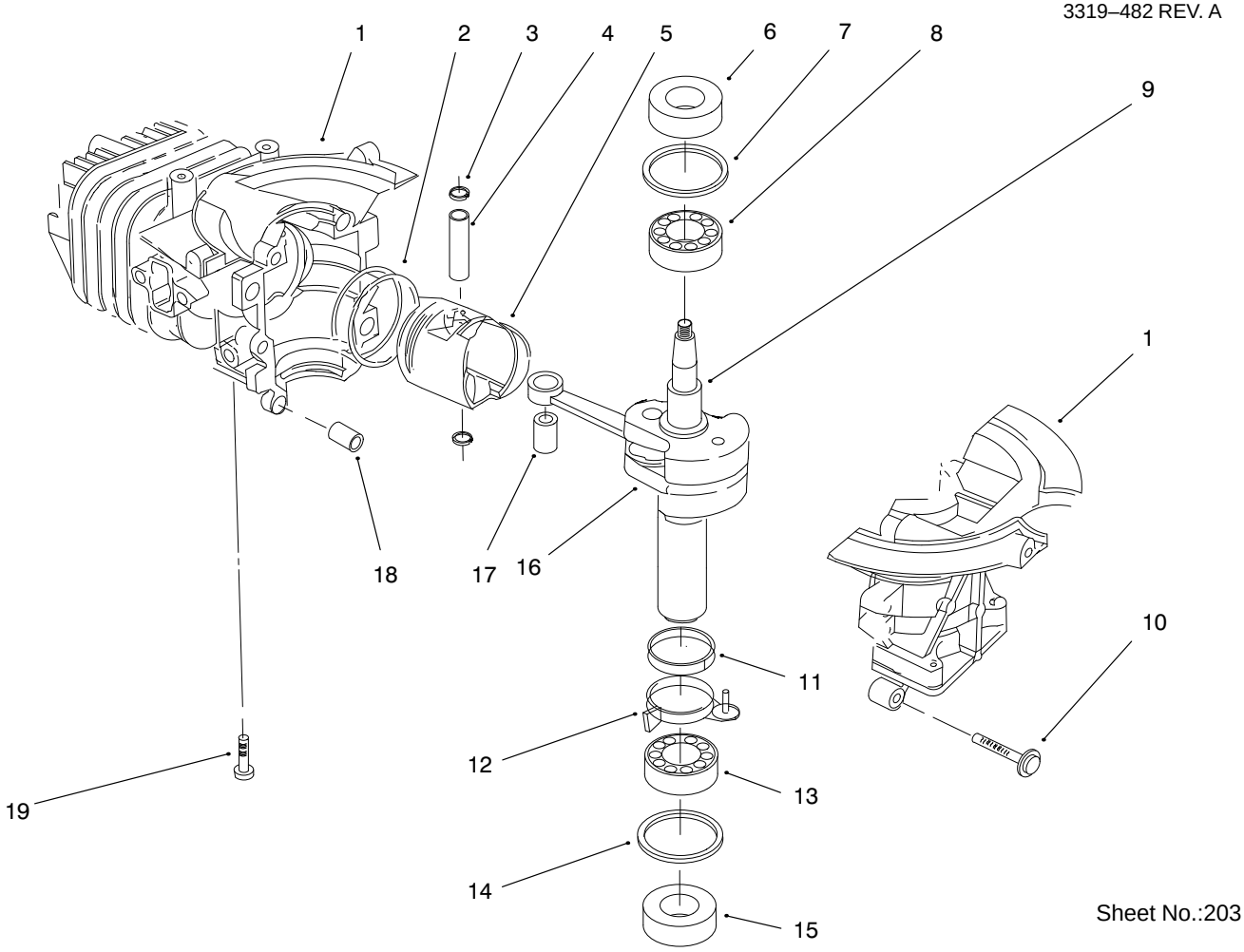

Sheet No.:203

Engine Assembly (Model No. 38435, & 38436)

Ref. No.	Part No.	Qty.	Description
1	95–7934	1	Cylinder/Crankcase ASM E
2	81–0590	1	Ring Set
3	81–0620	2	Circlip
4	81–0600	1	Pin–Wrist (12mm Dia)
5	81–2140	1	Piston (58mm)
6	81–0720	1	Oil Seal–Upper
7	81–0710	1	Thrust Washer–Upper
8	81–0690	1	Bearing–Upper (20mm)
9	81–5700	1	Crankshaft Conn Rod ASM
10	81–0540	5	Bolt
11	81–0770	1	Collar–Governor
12	81–0750	1	Centrifugal Bracket–Low
13	81–0700	1	Bearing–Lower (25mm)
14	81–0730	1	Thrust Washer–Lower
15	81–0740	1	Oil Seal–Lower
16	81–0760	1	Pin–Gov (3mm Dia X 5mm)
17	81–0610	1	Bearing–Wristpin
18	81–0520	2	Pin–Crankcase Dowel
19	81–0570	4	Bolt–Eng Mtg
*	94–9897	1	Engine–Short Block

Ref. No.	Part No.	Qty.	Description

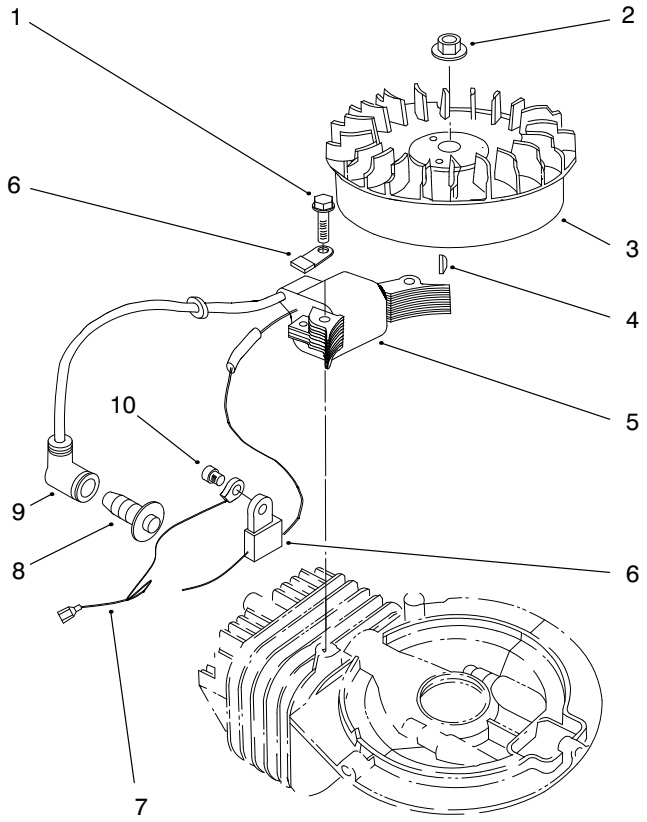

Sheet No.:204

Engine Assembly (Model No. 38435, & 38436)

Ref. No.	Part No.	Qty.	Description
1	81–5710	2	Screw SH
2	81–1330	1	Nut
3	81–4620	1	Flywheel
4	81–2370	1	Key–Flywheel (Aluminum)
5	94–8891	1	Coil ASM
6	81–1480	1	Clamp–Magneto Wire
7	81–2860	1	Wire–Ground
8	50–1170	1	Spark Plug
9	81–1500	1	Cover–Spark Plug
10	53–1340	1	Bolt

Ref. No.	Part No.	Qty.	Description

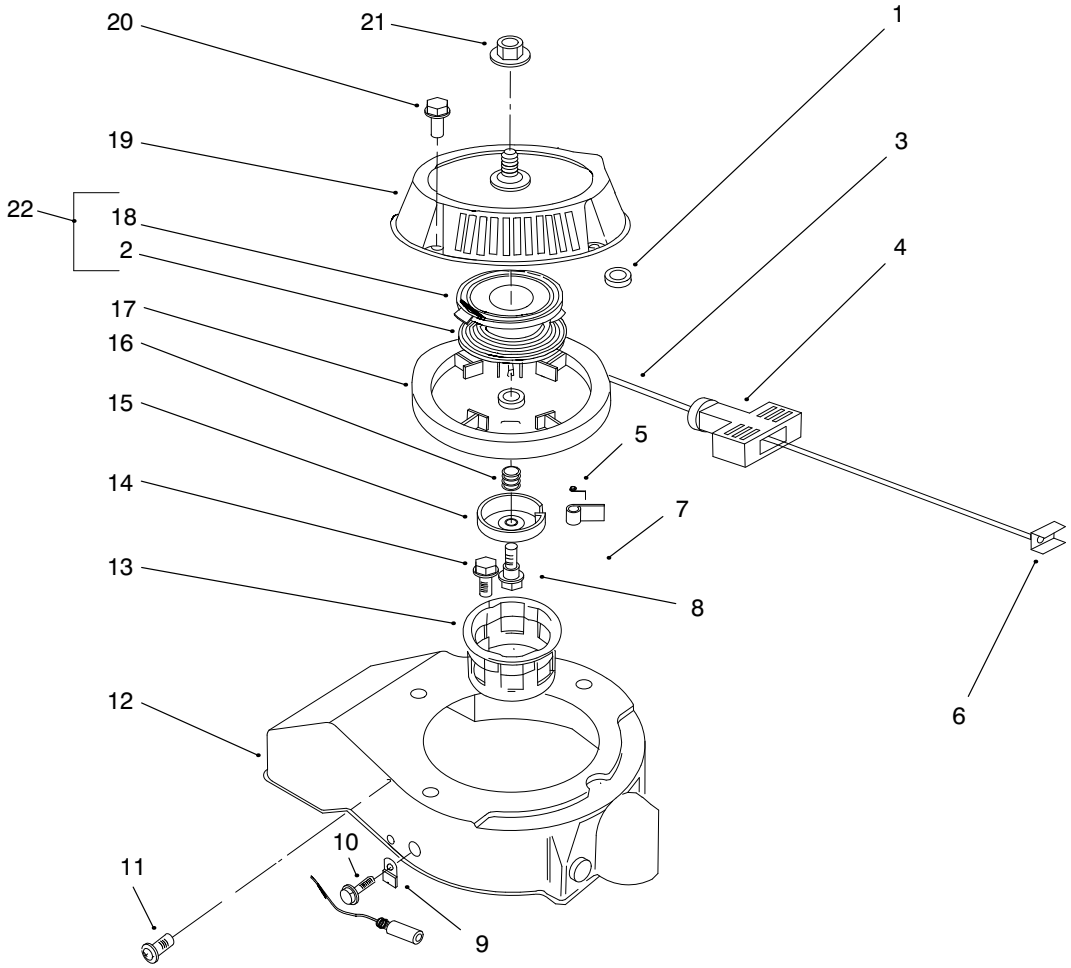

Sheet No.:205

Engine Assembly (Model No. 38435, & 38436)

Ref. No.	Part No.	Qty.	Description
1	55–9620	1	Spacer
2	81–1200	1	Spring–Recoil
3	81–2870	1	Rope (3.5mm X 2.3mm)
4	81–1630	1	Handle–Recoil
5	81–1220	1	Spring–Dog
6	81–5760	1	Insert–Recoil Handle
7	81–1230	1	Dog–Starter
8	81–1260	1	Bolt–Shoulder
9	55–3070	1	Clamp
10	53–1340	3	Bolt
11	81–4660	2	Screw
12	81–4610	1	Shroud–Blower
13	81–1290	1	Cup–Starter
14	81–1300	3	Bolt
15	81–1250	1	Retainer–Dog
16	81–1240	1	Spring–Compression
17	81–1210	1	Reel–Rope Pulley
18	81–1640	1	Retainer–Recoil Spring
19	81–0290	1	Case–Recoil
20	81–0390	4	Bolt–HH 8mm
21	81–0300	1	Nut–HH 8mm
22	81–2300	1	Recoil Spring & Retain
*	81–0280	1	ASM–Recoil

Ref. No.	Part No.	Qty.	Description

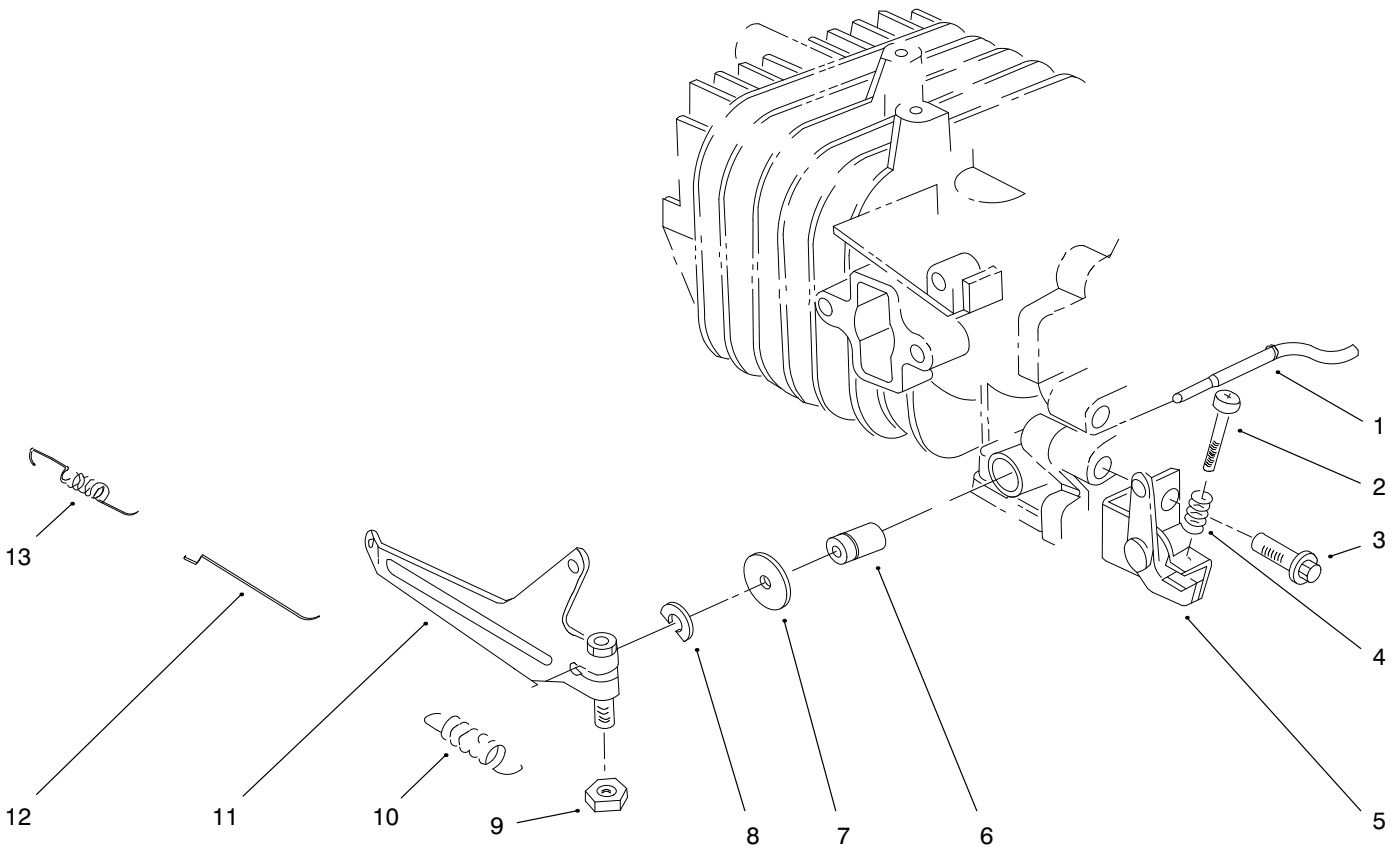

Sheet No.:206

Engine Assembly (Model No. 38435, & 38436)

Ref. No.	Part No.	Qty.	Description
1	81–2880	1	Shaft–Governor
2	81–2890	1	Screw
3	81–0540	1	Bolt
4	81–2900	1	Spring–Compression
5	81–0370	1	Bracket–Gov Spring
6	81–0850	1	Oil Seal–Gov Shaft
7	81–0860	1	Washer
8	81–0870	1	E–Ring
9	81–0900	1	Nut
10	81–0360	1	Spring–Governor
11	81–4650	1	Arm–Govenor
12	81–0430	1	Rod–Carburetor
13	81–0440	1	Spring–Carb Rod

Ref. No.	Part No.	Qty.	Description

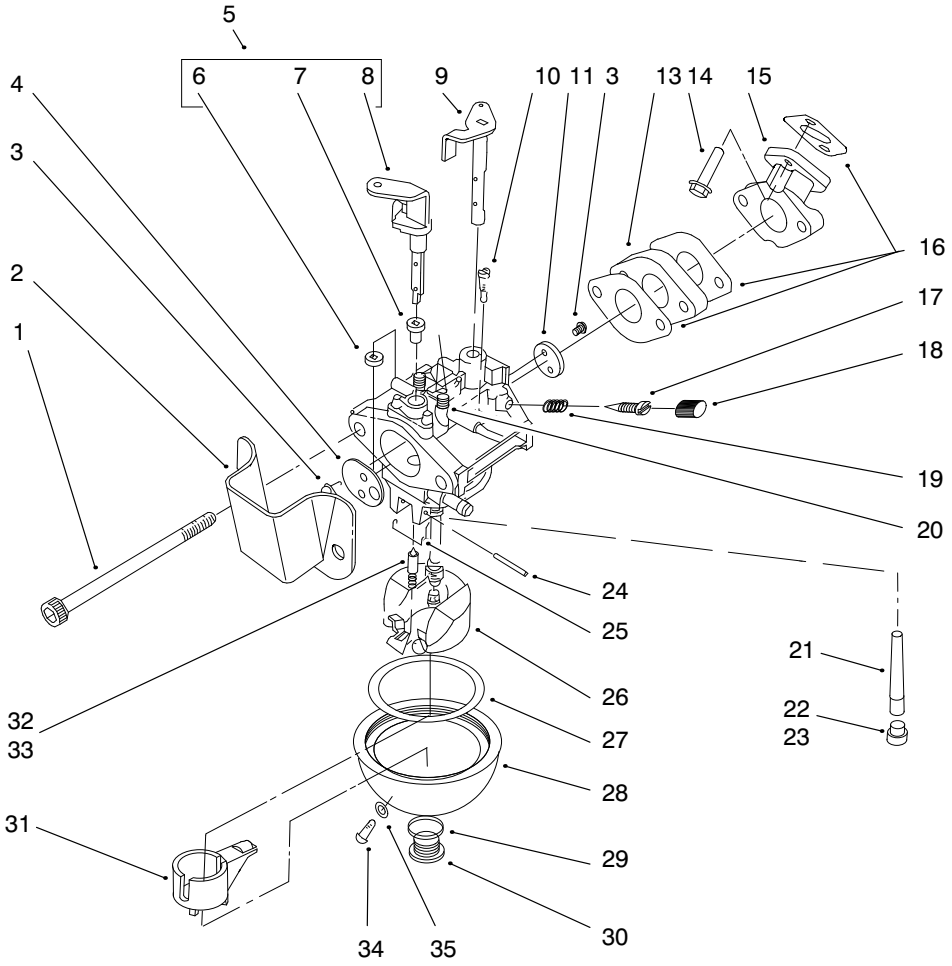

Sheet No.:207

Engine Assembly (Model No. 38435, & 38436)

Ref. No.	Part No.	Qty.	Description
1	81–0450	2	Bolt
2	81–2700	1	Spitcup
3	81–2710	4	Screw–Choke Valve
4	81–2720	1	Valve–Choke
5	81–2910	1	Shaft–Choke ASM
6	81–5530	1	Bushing–Lower Choke
7	81–5520	1	Bushing–Upper Choke
8	81–5510	1	Shaft–Choke
9	81–2920	1	Shaft–Throttle
10	95–7941	1	Jet – Pilot
11	81–2940	1	Valve–Throttle
13	81–0460	1	Insulator–Carburetor
14	50–6350	2	Bolt
15	81–0470	1	Manifold–Intake
16	81–2570	3	Gasket–Carburetor
17	95–7937	1	Aduster – Screw
18	95–7938	1	Cap – Adjuster
19	81–2580	2	Spring–Pilot Screw
20	81–2590	2	Sprint–Choke Detent
21	95–7936	1	Nozzle – Main
22	81–1040	1	Jet–Main (No. 80)
23	95–7940	1	Jet – Main
24	81–2600	1	Pin–Hinge
25	95–7939	1	Spring – Torsion
26	81–4920	1	Float
27	81–2630	1	Gasket–Float Bowl

Ref. No.	Part No.	Qty.	Description
28	81–2640	1	Bowl–Float
29	81–2650	1	Gasket–Bowl Screw
30	81–2660	1	Screw–Float Bowl
31	81–4930	1	Spacer–Float
32	81–4700	1	Needle
33	81–5820	1	Needle Valve Seat Kit
34	81–2670	1	Screw–Drain
35	81–2680	1	Gasket–Drain Screw
*	95–7935	1	Carburetor – ASM

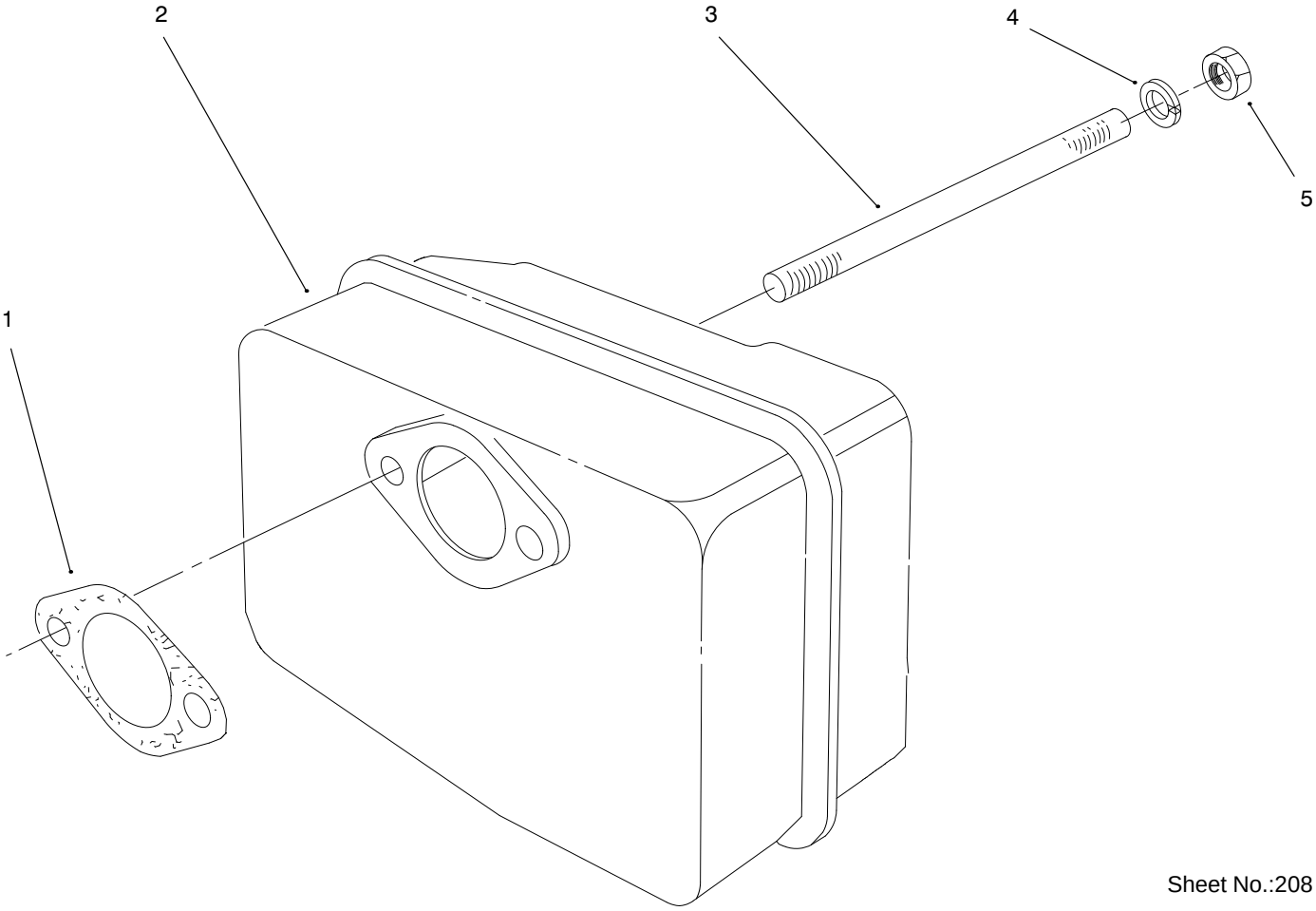

Sheet No.:208

Engine Assembly (Model No. 38435, & 38436)

Ref. No.	Part No.	Qty.	Description
1	81–1080	1	Gasket–Muffler
2	81–0490	1	Muffler
3	81–0500	2	Stud–Muffler
4	81–1120	2	Washer–Lock
5	81–1110	2	Nut

Ref. No.	Part No.	Qty.	Description

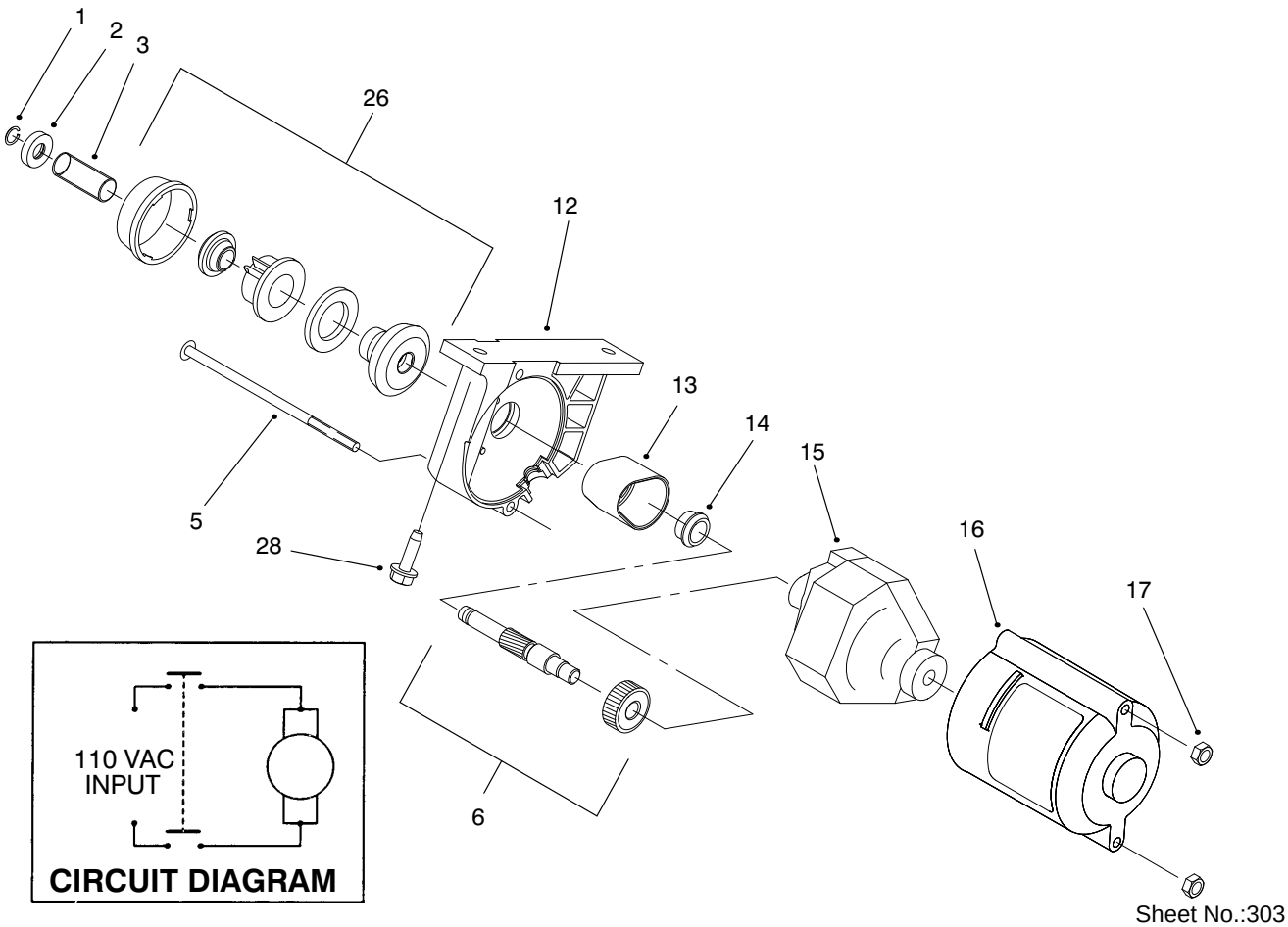

Sheet No.:303

Starter Motor Assembly (Model No. 38435, & 38436)

Ref. No.	Part No.	Qty.	Description
1	61–4680	1	Ring–Lock
2	61–4670	1	Stop–Pinion
3	61–4690	1	Spring–Anti Drift
†5	32144–101	1	Screw–PPH
6	92–6003	1	Asm–shaft & Gear
12	80–0710	1	Housing–Mtg
13	70–7850	1	Cover–Gear
14	70–7900	1	Bushing–Upper
15	70–7801	1	ASM–Starter Motor
16	83–7350	1	Housing–Motor
17	3296–2	2	Nut–Lock
26	61–4700	1	Pinion ASM
28	56–6380	2	Screw–Mtg

Ref. No.	Part No.	Qty.	Description

† Included in a service kit or in an assembly

Toro Part Number Index

Part No.	Page No.	Ref. No.	Qty.	Description
3−7501	9	19	2	Washer−Curved
5−4460	2	6	2	Washer−Fender
12−3270	2	23	2	Screw−HH
16−9449	2	24	1	Cover−Drive
17−9424	9	10	5	Screw
20−4320	3	4	2	Washer−Rubber
25−5640	2	17	1	Washer
27−0410	2	18	1	Bolt−Shoulder
28−9170	4	*	1	Cord−7 Ft
36−3860	2	22	1	Screw−Pentaflo
38−7820	1	6	2	Bearing−Ball
38−8211	1	8	1	Pin
38−8620	1	15	1	Retainer−Bearing
40−5940	7	19	1	Switch−Key
40−8230	9	32	1	Grip−Control
44−2750	7	17	1	Body−Primer
44−3174	7	30	1	Hose−Primer
46−8092	3	21	2	Screw − Plastite
49−2481	5	6	2	Hose−Gas
50−1170	11	10	1	Spark Plug
50−1170	17	8	1	Spark Plug
50−6350	14	14	2	Bolt
50−6350	20	14	2	Bolt
52−7270	1	5	1	Washer−Rubber
52−7280	1	16	2	Washer−Thrust
52−7290	1	2	1	Retainer−Bearing
52−9110	1	24	1	Wa−Bearing Flange
53−1340	11	8	1	Bolt
53−1340	12	9	3	Bolt
53−1340	17	10	1	Bolt
53−1340	18	10	3	Bolt
55−3070	18	9	1	Clamp
55−3573	7	12	1	ASM−Gas Cap
55−8700	3	20	1	Housing
55−8720	3	10	1	Gear Ring−Chute
55−8730	3	29	1	Gear−Worm/Spur
55−8740	3	30	1	Gear−Face
55−8750	3	28	1	Spacer−Spur Gear
55−8760	1	22	1	Scraper
55−8791	7	1	1	Shroud−Lower
55−8810	7	26	1	Control−Choke (Model No. 38430, 38435)
55−8811	7	25	1	Control−Choke Int'l (Model No. 38431, 38436)
55−8820	7	24	1	Fitting−Choke Control
55−8831	5	4	1	Tank−Gas
55−8840	1	25	1	Sideplate−RH
55−8851	2	1	1	Sideplate−LH
55−8910	3	22	2	Retainer−Chute Ring
55−8921	3	18	1	Ring−Chute Support
55−8950	3	5	2	Plate−Friction
55−9070−01	5	40	1	Support−Recoil
55−9090	9	29	1	Support−Crank
55−9100−01	9	8	1	Arm−Clutch Cable
55−9120	9	25	1	Handle−Lower (Model No. 38431, 38436)
55−9121−01	9	24	1	Handle−Lower (Model No. 38430, 38435)
55−9130	9	3	1	Bar−Control
55−9140	9	26	1	Rod−Crank
55−9150	3	31	1	Shaft−Worm
55−9180	2	12	1	Pulley−Engine
55−9202	4	3	1	Wa−Rotor
55−9210	7	31	1	Wa−Shield
55−9220−01	1	23	1	Wa−Housing
55−9260	7	4	1	Seal−Chute

*Not Illustrated

Toro Part Number Index (cont.)

Part No.	Page No.	Ref. No.	Qty.	Description
55−9270	9	17	1	Spring−Extension
55−9280	2	14	1	Spring−Extension
55−9290	2	21	1	Pulley−Idler
55−9300	2	13	1	Belt−Drive
55−9310	5	5	1	Seal−Tank
55−9321	9	15	1	Cable−Clutch
55−9340	9	2	2	Spacer−Control Bar
55−9350	7	21	1	Name Plate−Control (Model No. 38430)
55−9370	4	2	4	Spacer−Rotor Blade
55−9380	9	16	1	Adjuster−Clutch Cable
55−9390	9	14	1	Cover−Spring
55−9410	7	15	1	Guide−Starter Rope
55−9420	9	13	1	Bolt − Eye
55−9430	1	13	1	”z” Bracket−Housing
55−9440	9	27	1	Spring−Compression
55−9450	5	47	2	Mount−Load
55−9460	5	48	2	Mount−Rebound
55−9470	5	49	2	Tube−Spacer
55−9490−01	7	13	1	Wa−Panel
55−9512	1	12	1	Cover−Bottom
55−9520	2	27	1	Roller−Brake
55−9530	2	8	1	Guide−Belt
55−9540−01	7	3	1	Retainer−Chute Seal
55−9550	2	29	1	Arm−Brake
55−9570	2	28	1	ASM−Pivot Plate
55−9620	2	3	4	Spacer
55−9620	12	1	1	Spacer
55−9620	18	1	1	Spacer
55−9660	7	34	4	Washer−Rubber
55−9670	9	1	1	Washer−Rubber
56−2610	1	17	1	Bracket−Housing
56−2680	3	1	1	Deflector
56−6360	5	8	1	Filter−Fuel
56−6380	22	28	2	Screw−Mtg
56−6380	5	50	1	Screw−Mtg (Model No. 38435, 38436)
60−9320	2	32	1	ASM−Pulley
60−9480	2	19	1	Decal−Routing
61−4410	7	23	1	Nameplate−Control (Model No. 38435)
61−4670	22	2	1	Stop−Pinion
61−4680	22	1	1	Ring−Lock
61−4690	22	3	1	Spring−Anti Drift
61−4700	22	26	1	Pinion ASM
61−4790	8	37	1	Decal−,Warning (Csa) (E) (Model No. 38436)
61−4810	5	18	1	Boot−Switch (Model No. 38435, 38436)
61−4820	5	19	1	Switch−Starter (Model No. 38435, 38436)
61−8640	9	18	2	Screw − HH
63−3610	2	16	1	ASM−Idler Arm
63−3750	5	34	1	Wa−Frame
63−8360	7	18	1	Key−Ignition
66−6500	5	38	1	Spacer−Wheel
66−6501	5	35	1	Spacer−Wheel
66−6510	5	36	2	Wheel
66−6600	4	5	2	Rotor
66−6870	9	4	1	Decal−Rotor Drive (Model No. 38430, 38435)
66−7460	7	16	1	Bulb−Primer
70−7801	22	15	1	ASM−Starter Motor
70−7850	22	13	1	Cover−Gear
70−7900	22	14	1	Bushing−Upper
71−5320	5	42	1	Washer−Support
80−0710	22	12	1	Housing−Mtg
80−3730	5	21	1	Base−Switch Housing (Model No. 38435, 38436)
81−0280	12	*	1	ASM−Recoil

*Not Illustrated

Toro Part Number Index (cont.)

Part No.	Page No.	Ref. No.	Qty.	Description
81−0280	18	*	1	ASM−Recoil
81−0290	12	17	1	Case−Recoil
81−0290	18	19	1	Case−Recoil
81−0300	5	41	1	Nut−HH
81−0300	12	19	1	Nut−HH 8mm
81−0300	18	21	1	Nut−HH 8mm
81−0310	12	10	1	Shroud−Blower
81−0320	11	3	1	Flywheel
81−0360	13	10	1	Spring−Governor
81−0360	19	10	1	Spring−Governor
81−0370	13	5	1	Bracket−Gov Spring
81−0370	19	5	1	Bracket−Gov Spring
81−0380	11	6	2	Screw
81−0390	12	18	4	Bolt−HH 8mm
81−0390	18	20	4	Bolt−HH 8mm
81−0410	13	11	1	Arm−Governor
81−0430	13	12	1	Rod−Carburetor
81−0430	19	12	1	Rod−Carburetor
81−0440	13	13	1	Spring−Carb Rod
81−0440	19	13	1	Spring−Carb Rod
81−0450	14	1	2	Bolt
81−0450	20	1	2	Bolt
81−0460	14	13	1	Insulator−Carburetor
81−0460	20	13	1	Insulator−Carburetor
81−0470	14	15	1	Manifold−Intake
81−0470	20	15	1	Manifold−Intake
81−0490	15	2	1	Muffler
81−0490	21	2	1	Muffler
81−0500	15	3	2	Stud−Muffler
81−0500	21	3	2	Stud−Muffler
81−0520	10	18	2	Pin−Crankcase Dowel
81−0520	16	18	2	Pin−Crankcase Dowel
81−0540	10	10	5	Bolt
81−0540	13	3	1	Bolt
81−0540	16	10	5	Bolt
81−0540	19	3	1	Bolt
81−0570	5	45	4	Bolt−Eng Mtg
81−0570	10	19	4	Bolt−Eng Mtg
81−0570	16	19	4	Bolt−Eng Mtg
81−0590	10	2	1	Ring Set
81−0590	16	2	1	Ring Set
81−0600	10	4	1	Pin−Wrist (12mm Dia)
81−0600	16	4	1	Pin−Wrist (12mm Dia)
81−0610	10	17	1	Bearing−Wristpin
81−0610	16	17	1	Bearing−Wristpin
81−0620	10	3	2	Circlip
81−0620	16	3	2	Circlip
81−0690	10	8	1	Bearing−Upper (20mm)
81−0690	16	8	1	Bearing−Upper (20mm)
81−0700	10	13	1	Bearing−Lower (25mm)
81−0700	16	13	1	Bearing−Lower (25mm)
81−0710	10	7	1	Thrust Washer−Upper
81−0710	16	7	1	Thrust Washer−Upper
81−0720	10	6	1	Oil Seal−Upper
81−0720	16	6	1	Oil Seal−Upper
81−0730	10	14	1	Thrust Washer−Lower
81−0730	16	14	1	Thrust Washer−Lower
81−0740	10	15	1	Oil Seal−Lower
81−0740	16	15	1	Oil Seal−Lower
81−0750	10	12	1	Centrifugal Bracket−Low
81−0750	16	12	1	Centrifugal Bracket−Low
81−0760	10	16	1	Pin−Gov (3mm Dia X 5mm)

*Not Illustrated

Toro Part Number Index (cont.)

Part No.	Page No.	Ref. No.	Qty.	Description
81−0760	16	16	1	Pin−Gov (3mm Dia X 5mm)
81−0770	10	11	1	Collar−Governor
81−0770	16	11	1	Collar−Governor
81−0850	13	6	1	Oil Seal−Gov Shaft
81−0850	19	6	1	Oil Seal−Gov Shaft
81−0860	13	7	1	Washer
81−0860	19	7	1	Washer
81−0870	13	8	1	E−Ring
81−0870	19	8	1	E−Ring
81−0900	13	9	1	Nut
81−0900	19	9	1	Nut
81−1040	14	22	1	Jet−Main (No. 80)
81−1040	20	22	1	Jet−Main (No. 80)
81−1080	15	1	1	Gasket−Muffler
81−1080	21	1	1	Gasket−Muffler
81−1110	15	5	2	Nut
81−1110	21	5	2	Nut
81−1120	15	4	2	Washer−Lock
81−1120	21	4	2	Washer−Lock
81−1200	12	2	1	Spring−Recoil
81−1200	18	2	1	Spring−Recoil
81−1210	12	15	1	Reel−Rope Pulley
81−1210	18	17	1	Reel−Rope Pulley
81−1220	12	5	1	Spring−Dog
81−1220	18	5	1	Spring−Dog
81−1230	12	7	1	Dog−Starter
81−1230	18	7	1	Dog−Starter
81−1240	12	14	1	Spring−Compression
81−1240	18	16	1	Spring−Compression
81−1250	12	13	1	Retainer−Dog
81−1250	18	15	1	Retainer−Dog
81−1260	12	8	1	Bolt−Shoulder
81−1260	18	8	1	Bolt−Shoulder
81−1290	12	11	1	Cup−Starter
81−1290	18	13	1	Cup−Starter
81−1300	12	12	3	Bolt
81−1300	18	14	3	Bolt
81−1330	11	2	1	Nut
81−1330	17	2	1	Nut
81−1480	11	7	1	Clamp−Magneto Wire
81−1480	17	6	1	Clamp−Magneto Wire
81−1500	11	11	1	Cover−Spark Plug
81−1500	17	9	1	Cover−Spark Plug
81−1630	12	4	1	Handle−Recoil
81−1630	18	4	1	Handle−Recoil
81−1640	12	16	1	Retainer−Recoil Spring
81−1640	18	18	1	Retainer−Recoil Spring
81−2140	10	5	1	Piston (58mm)
81−2140	16	5	1	Piston (58mm)
81−2300	12	20	1	Recoil Spring & Retain
81−2300	18	22	1	Recoil Spring & Retain
81−2370	11	4	1	Key−Flywheel (Aluminum)
81−2370	17	4	1	Key−Flywheel (Aluminum)
81−2570	14	16	3	Gasket−Carburetor
81−2570	20	16	3	Gasket−Carburetor
81−2580	14	19	2	Spring−Pilot Screw
81−2580	20	19	2	Spring−Pilot Screw
81−2590	14	20	2	Sprint−Choke Detent
81−2590	20	20	2	Sprint−Choke Detent
81−2600	14	24	1	Pin−Hinge
81−2600	20	24	1	Pin−Hinge
81−2630	14	27	1	Gasket−Float Bowl

*Not Illustrated

Toro Part Number Index (cont.)

Part No.	Page No.	Ref. No.	Qty.	Description
81−2630	20	27	1	Gasket−Float Bowl
81−2640	14	28	1	Bowl−Float
81−2640	20	28	1	Bowl−Float
81−2650	14	29	1	Gasket−Bowl Screw
81−2650	20	29	1	Gasket−Bowl Screw
81−2660	14	30	1	Screw−Float Bowl
81−2660	20	30	1	Screw−Float Bowl
81−2670	14	34	1	Screw−Drain
81−2670	20	34	1	Screw−Drain
81−2680	14	35	1	Gasket−Drain Screw
81−2680	20	35	1	Gasket−Drain Screw
81−2700	14	2	1	Spitcup
81−2700	20	2	1	Spitcup
81−2710	14	3	4	Screw−Choke Valve
81−2710	20	3	4	Screw−Choke Valve
81−2720	14	4	1	Valve−Choke
81−2720	20	4	1	Valve−Choke
81−2860	11	9	1	Wire−Ground
81−2860	17	7	1	Wire−Ground
81−2870	12	3	1	Rope (3.5mm X 2.3mm)
81−2870	18	3	1	Rope (3.5mm X 2.3mm)
81−2880	13	1	1	Shaft−Governor
81−2880	19	1	1	Shaft−Governor
81−2890	13	2	1	Screw
81−2890	19	2	1	Screw
81−2900	13	4	1	Spring−Compression
81−2900	19	4	1	Spring−Compression
81−2910	14	5	1	Shaft−Choke ASM
81−2910	20	5	1	Shaft−Choke ASM
81−2920	14	9	1	Shaft−Throttle
81−2920	20	9	1	Shaft−Throttle
81−2940	14	11	1	Valve−Throttle
81−2940	20	11	1	Valve−Throttle
81−4610	18	12	1	Shroud−Blower
81−4620	17	3	1	Flywheel
81−4650	19	11	1	Arm−Govenor
81−4660	18	11	2	Screw
81−4700	14	32	1	Needle
81−4700	20	32	1	Needle
81−4920	14	26	1	Float
81−4920	20	26	1	Float
81−4930	14	31	1	Spacer−Float
81−4930	20	31	1	Spacer−Float
81−5510	14	8	1	Shaft−Choke
81−5510	20	8	1	Shaft−Choke
81−5520	14	7	1	Bushing−Upper Choke
81−5520	20	7	1	Bushing−Upper Choke
81−5530	14	6	1	Bushing−Lower Choke
81−5530	20	6	1	Bushing−Lower Choke
81−5700	10	9	1	Crankshaft Conn Rod ASM
81−5700	16	9	1	Crankshaft Conn Rod ASM
81−5710	11	1	2	Screw SH
81−5710	17	1	2	Screw SH
81−5760	12	6	1	Insert−Recoil Handle
81−5760	18	6	1	Insert−Recoil Handle
81−5820	14	33	1	Needle Valve Seat Kit
81−5820	20	33	1	Needle Valve Seat Kit
83−7350	22	16	1	Housing−Motor
84−1971	4	6	8	Screw−Counter Sunk Oval
84−5292	5	51	1	ASM−Starter Motor (Model No. 38435, 38436)
84−5650	3	32	1	Bracket−Chute Gear
88−0771	4	1	2	Blade−Rotor

*Not Illustrated

Toro Part Number Index (cont.)

Part No.	Page No.	Ref. No.	Qty.	Description
92−4853	8	38	1	Handle−Starter
94−2561	2	36	1	Decal−Hot (Model No. 38431, 38436)
94−2569	7	20	1	Plate−Name (Model No. 38436)
94−2570	7	22	1	Plate−Name (Model No. 38431)
94−2577	9	5	1	Decal−Rotor Drive (Model No. 38431, 38436)
94−2790	3	2	1	ASM−Chute & Decal(Serv) (Model No. 38430, 38435)
94−2791	3	2	1	ASM−Chute & Decal(Serv) (Model No. 38431, 38436)
94−2794	9	11	1	Upper Handle/Decal ASM (Model No. 38431, 38436)
94−2797	7	29	1	Linkage−Choke
94−2798	8	39	1	Linkage−Choke (Model No. 38435, 38436)
94−2900	3	6	1	Decal−Danger
94−2901	3	7	1	Decal−Danger
94−8874	7	9	1	Decal−Ccr 3000 Gts (Model No. 38430, 38431)
94−8875	7	8	1	Decal−Ccr 3000e Gts (Model No. 38435, 38436)
94−8890	11	5	1	Coil ASM
94−8891	17	5	1	Coil ASM
94−9890	5	53	1	Engine 2−Cyc Snow (Model No. 38430, 38431)
94−9891	6	54	1	Engine 2−,Cyc Snow (Model No. 38435, 38436)
94−9896	10	*	1	Engine−Short Block
94−9897	16	*	1	Engine−Short Block
94−9898	7	5	1	Upper Shroud/Decal ASM (Model No. 38430, 38431)
94−9899	7	5	1	Upper Shroud/Decal ASM (Model No. 38435, 38436)
94−9933	5	20	1	Plug−Power (Model No. 38435, 38436)
95−1904	2	35	1	Decal−Hot (Model No. 38430, 38435)
95−2669	9	11	1	ASM−Handle (Model No. 38430, 38435)
95−7933	10	1	1	Cylinder/Crankcase ASM R
95−7934	16	1	1	Cylinder/Crankcase ASM E
95−7935	14	*	1	Carburetor − ASM
95−7935	20	*	1	Carburetor − ASM
95−7936	14	21	1	Nozzle − Main
95−7936	20	21	1	Nozzle − Main
95−7937	14	17	1	Aduster − Screw
95−7937	20	17	1	Aduster − Screw
95−7938	14	18	1	Cap − Adjuster
95−7938	20	18	1	Cap − Adjuster
95−7939	14	25	1	Spring − Torsion
95−7939	20	25	1	Spring − Torsion
95−7940	14	23	1	Jet − Main
95−7940	20	23	1	Jet − Main
95−7941	14	10	1	Jet − Pilot
95−7941	20	10	1	Jet − Pilot
218−532	7	33	1	Connector
237−89	5	3	1	Grommet
2412−91	5	39	1	Clamp−Cable
2412−98	5	7	4	Clamp−Hose
250−4	5	22	1	Tie−Cable (Model No. 38435, 38436)
256−249	9	30	1	Grommet−Nyliner
321−4	1	9	3	Screw−HH
321−4	2	33	2	Screw−HH
321−4	3	12	6	Screw−HH
321−4	4	8	4	Screw−HH
321−4	5	12	4	Screw−HH
321−6	1	11	3	Screw−HH
321−8	4	7	1	Screw−HH
321−13	2	9	1	Screw−HH
321−13	9	28	2	Screw−HH
321−30	2	30	1	Screw − HH
322−3	2	7	2	Screw−HH
322−3	5	31	2	Screw−HH
322−3	9	21	2	Screw−HH
322−9	9	20	2	Screw−HH
322−43	1	7	1	Screw−HH

*Not Illustrated

Toro Part Number Index (cont.)

Part No.	Page No.	Ref. No.	Qty.	Description
323−29	2	20	1	Screw−HH
3229−11	1	19	3	Bolt−CARR
3230−18	3	11	3	Screw−CARR
3230−22	3	3	2	Screw−CARR
3234−25	1	3	1	Bolt−Flange
3241−7	2	11	1	Screw−Sqh
3245−41	2	10	1	Screw−Skt HH
3250−32	7	7	2	Screw−PPH
3256−14	7	35	4	Washer−Flat
3256−22	1	10	7	Washer−Flat
3256−22	3	14	8	Washer−Flat
3256−22	5	11	2	Washer−Flat
3256−22	7	6	2	Washer−Flat
3256−23	5	2	1	Washer−Flat
3256−24	1	4	1	Washer−Flat
3256−49	7	27	1	Washer−Flat
3256−67	1	20	2	Washer−Flat
3256−68	3	26	2	Washer−Flt
3274−31	2	2	1	Screw−HH
3274−31	9	9	1	Screw−HH
3290−320	9	31	1	Nut−Push
3290−456	2	31	1	Washer−Lock
3290−456	3	25	2	Washer−Lock
3290−456	5	32	4	Washer−Lock
3290−474	7	2	8	Pushnut−Arched Round
3296−2	1	14	3	Nut Lock
3296−2	22	17	2	Nut−Lock
3296−12	7	36	4	Nut−Lock
3296−29	2	5	3	Nut−Lock
3296−29	3	24	2	Nut−Lock
3296−29	5	33	3	Nut−Lock
3296−29	9	12	8	Nut−Lock
3296−42	1	1	16	Nut−Lock
3296−42	2	4	5	Nut−Lock
3296−42	3	19	8	Nut−Lock
3296−42	5	10	4	Nut−Lock
3296−42	9	7	3	Nut−Lock
3296−56	4	4	12	Nut−Lock
32105−8	2	34	3	Screw
32105−8	7	32	4	Screw
32105−15	1	26	5	Screw−HH
32105−15	2	25	2	Screw−HH
32111−8	9	6	2	Nut Acorn
32112−11	2	26	1	Nut−Push
32112−11	3	27	2	Nut−Push
32112−14	5	37	2	Pushnut
32128−10	1	21	2	Nut−Lock HHF
32144−27	5	16	3	Screw (Model No. 38435, 38436)
32144−101	22	5	1	Screw−PPH
32144−111	7	28	1	Screw − PPH
32144−112	7	14	3	Screw−Thd Form
32149−1	3	9	3	Nut−Keps
32149−2	1	18	3	Nut−Hex Lock
32152−2	2	15	1	Nut−Lock HH
32152−8	5	1	1	Nut − Top Deform

*Not Illustrated