Form No. 3367-405 Rev B

TORO®

Count on it.

Parts Catalog

11-Blade Cutting Unit

Greensmaster® Flex™ 21 Traction Unit

Model No. 04202—Serial No. 311000001 and Up

Register at www.Toro.com.
Original Instructions (EN)

CE

3367-405 B

Ordering Replacement Parts

To order replacement parts, please supply the part number, the quantity, and the description of each part desired.

Understanding Reference Numbers

Each identified part in an illustration has a reference number. The reference number for a part also appears in the parts list, along with other information about the part.

This catalog uses two special reference number formats, one to indicate parts in a service assembly and another to indicate the quantity of a given part in an illustration.

Service Assembly Reference Numbers

Parts in service assemblies have reference numbers in the form a:b. The a represents the reference number of the entire service assembly and the b represents a sequential number unique to each part within the service assembly.

For example, a wheel assembly might be identified by reference number 6, the tire by 6:1, the valve by 6:2, and the wheel by 6:3. When you order the assembly identified by reference number 6, you receive all parts identified by reference numbers 6:1,6:2, and 6:3. However, you may also order any part individually. Reference numbers of this type appear in illustration and in parts lists.

Reference Numbers Indicating Quantity

In an illustration, if a reference number indicates more than one part, the reference number has the form nX y. The n represents the quantity of the part, the X is the multiplication symbol, and the y represents the reference number.

For example, in an illustration, the reference number 2X 37 means that two of the parts identified by reference number 37 are indicated.

List of Abbreviations

AR: as required

ASM: assembly

BBC: blade brake control

BHTF: button head thread forming

CARR: carriage

CCW: counter clockwise

CW: clockwise

DEG: degrees

DPA: Dual Point Adjustment

ECM: electronic control module

EXT: external

FH: flat head

GA: gauge

HD: heavy-duty

HF: hex flange

HH: hex head

HHF: hex head flange

HHFTF: hex head flange thread forming

HJ: hex jam

HLH: hex lag head

HOC: height-of-cut

HSBH: hex socket button head

HSFH: hex socket flat head

HSH: hex socket head

HWH: hex washer head

HWHTF: hex washer head thread forming

HYD: hydraulic

LH: left hand

LP: Liquefied Petroleum Gas

LPG: Liquefied Petroleum Gas

NI: nylon insert

NPTF: national pipe thread fine

PFH: phillips flat head

PPH: phillips pan head

PPHTF: phillips pan head thread forming

PRH: phillips round head

PTH: phillips truss head

PTO: power-take-off

RH: right hand

ROPS: roll-over protection system

RRB: rear roller brush

SFH: slotted fillister head

SHH: slotted hex head

SHWH: slotted hex washer head

SPH: slotted pan head

SQH: square head

SRH: slotted round head

STD: standard

TAP: self tapping

TTH: torx truss head

Contents

Right and Left Side Plate Assembly 4
Reel Assembly 5
Roller Assembly 6
Reel Drive Assembly 7
Attachments and Accessories 8

© 2013—The Toro® Company
8111 Lyndale Avenue South
Bloomington, MN 55420

Contact us at www.Toro.com.
Printed in the USA.
All Rights Reserved

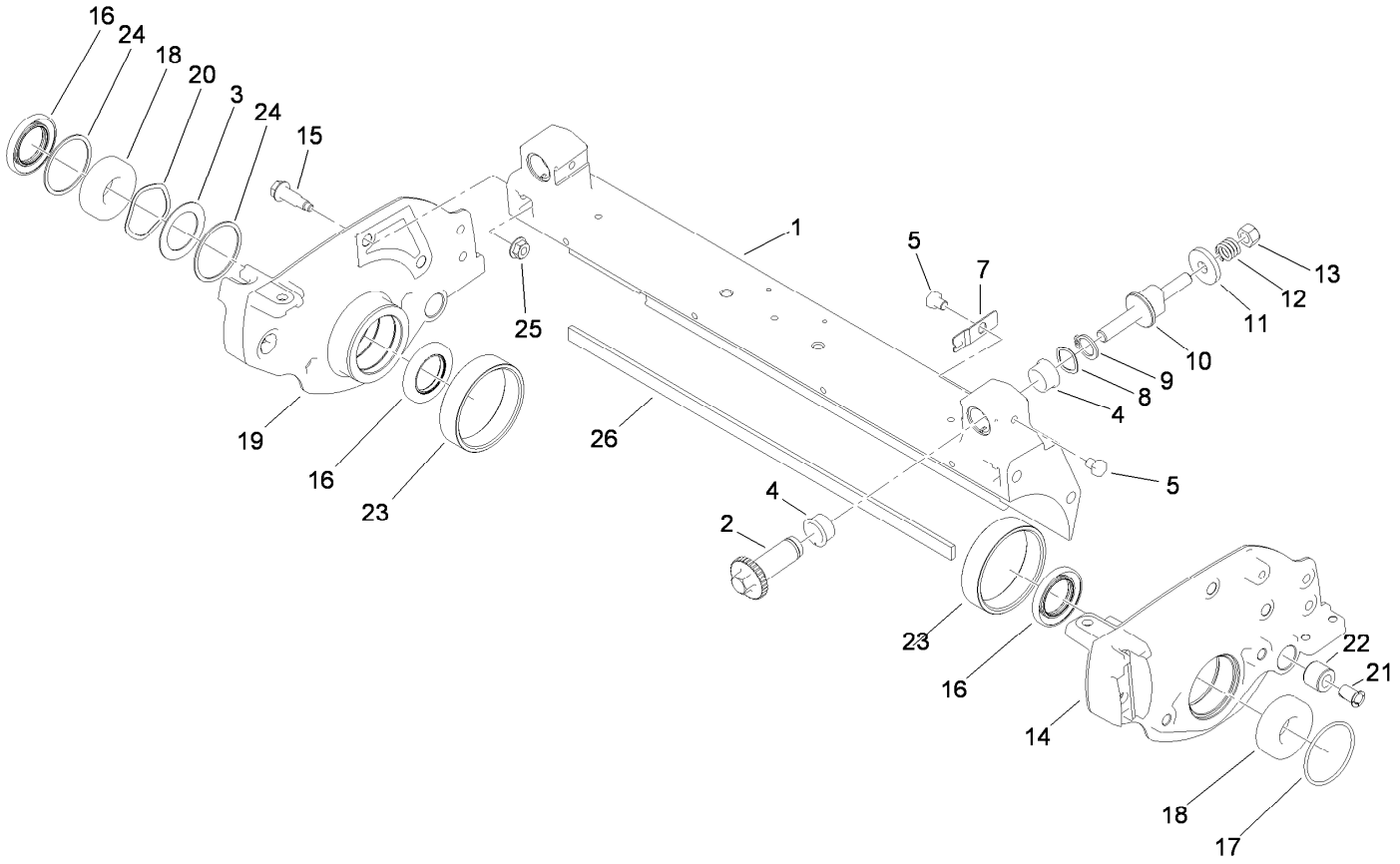

Right and Left Side Plate Assembly

Ref.	Part Number	Qty.	Description
1	119-9303	1	Crossmember
2	106-5363	2	Shaft-Adjuster
3	105-9943	1	Washer-Thrust
4	106-5344	4	Bushing-Flange, Keyed
5	119-4067	4	Screw-HH
7	99-2097	2	Detent
8	106-5335	2	Washer-Wave
9	32120-93	2	Ring-Retaining
10	99-2096	2	Screw-Adjuster, Bedbar
11	99-2098	2	Washer
12	99-3755	2	Spring-Compression
13	33025-00	2	Nut-Lock, NI
14	106-8429	1	Plate-Side, LH
15	105-5774	4	Bolt-Shoulder
16	107-3233	4	Seal-Oil
17	107-3244	1	O-Ring
18	251-342	2	Bearing-Ball
19	106-8428	1	Plate-Side, RH
20	3290-485	1	Washer-Wave
21	52-2890	2	Bushing-Nylon
22	63-9510	2	Bushing
23	106-4659	2	Bushing-Pitch
24	32151-92	2	Ring-Retaining
25	98-0668	4	Nut
26	106-2619	1	Strip-Seal

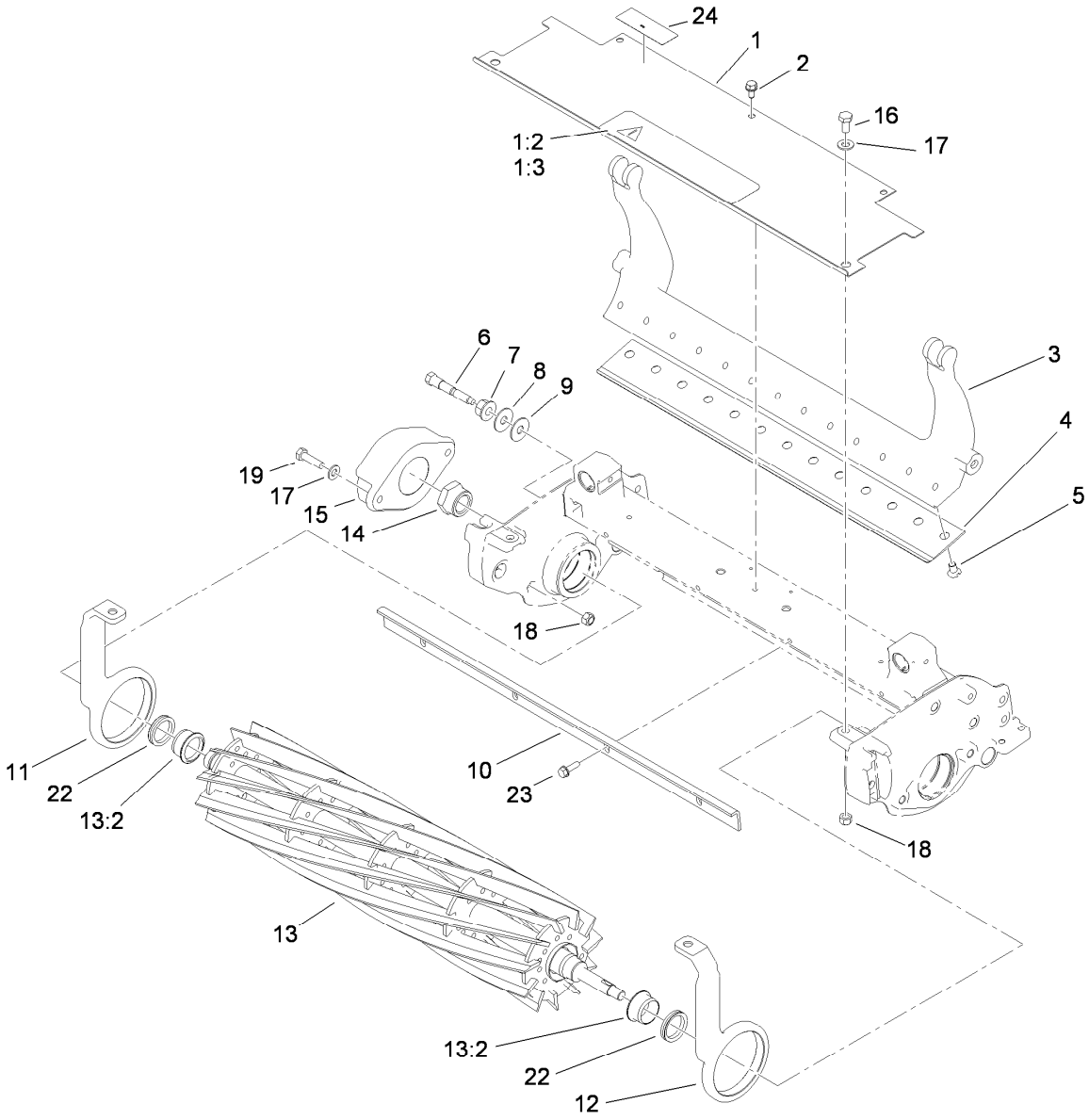

Reel Assembly

Ref.	Part Number	Qty.	Description
1	120-2660	1	Grass Shield ASM
1:2	93-8064	1	Decal-Danger, Ce
1:3	84-6560	1	Decal-Warning (Japan)
2	104-2628	3	Screw-HWH
3	106-2648-01	1	Bedbar
4	93-4262	1	Bedknife-Microcut
5	57-4910	13	Screw-Special
6	117-9493	2	Bolt-Bedbar
7	3296-28	2	Nut-Lock, NI
8	52-2860	4	Washer
9	52-2900	4	Washer-Plastic
10	106-6924-03	1	Bar-Cutoff
11	107-3226-01	1	Arm-Pitch, RH
12	107-7602-01	1	Arm-Pitch, LH
13	107-7635	1	11 Blade Reel ASM
13:2	108-3150	2	Sleeve ASM
14	107-3227	1	Nut-Bearing, Lock
15	106-8432-03	1	Weight-Reel
16	33114-016	2	Screw-HH
17	3256-23	4	Washer-Flat
18	33024-00	4	Nut-Lock, NI
19	33114-030	2	Screw-HH
22	107-3238	2	V-Ring
23	110-3986	4	Screw
24	115-1077	1	Decal-Regulatory

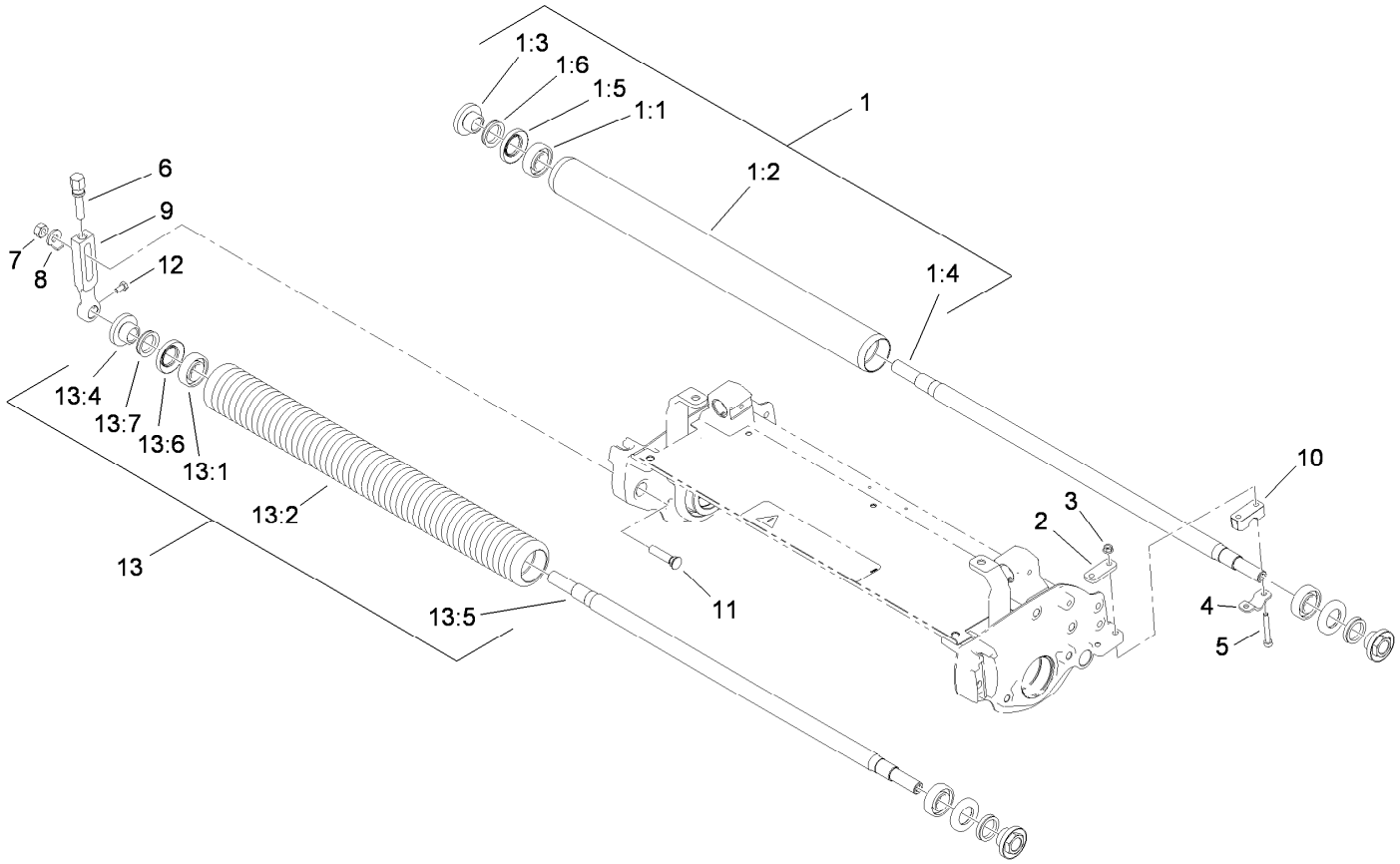

Roller Assembly

Ref.	Part Number	Qty.	Description
1	107-9036	1	Rear Roller ASM
1:1	251-347	2	Bearing-Ball
1:2	99-3841	1	Roller-Full, Aluminum ●
1:3	108-3151	2	Nut-Lock, Bearing
1:4	106-6940	1	Shaft-Roller
1:5	106-6941	2	Seal
1:6	106-6942	2	V-Ring
2	105-5711	2	Shim-Roller
3	33003-00	4	Nut-HF
4	105-5712	2	Retainer-Shaft
5	106-2603	4	Screw-HSH
6	110-7352	2	Screw-HOC
7	106-4668	2	Nut-Lock
8	104-2603	2	Washer-HOC
9	110-7351	2	Arm-HOC
10	105-5710	2	Spacer-Roller
11	105-5342	2	Bolt-Plow
12	33113-012	2	Screw-HH
13	107-9037	1	Wiehle Roller ASM
13:1	251-347	2	Bearing-Ball
13:2	104-0540	1	Roller-Wiehle ●
13:4	108-3151	2	Nut-Lock, Bearing
13:5	106-6940	1	Shaft-Roller
13:6	106-6941	2	Seal
13:7	106-6942	2	V-Ring

● Roller Rebuild Kit 107-1594 available for this roller.

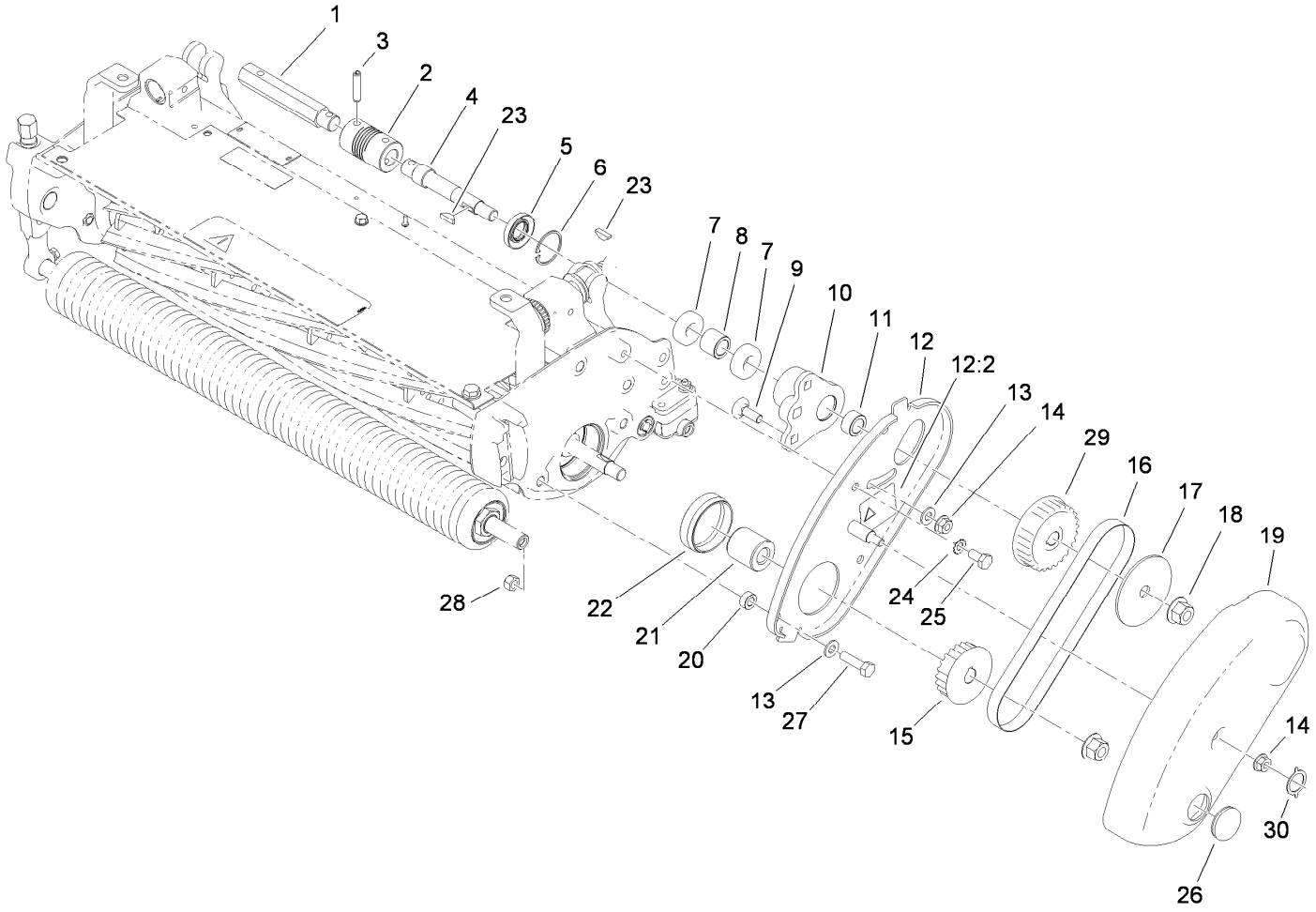

Reel Drive Assembly

Ref.	Part Number	Qty.	Description
1	110-2389	1	Shaft-Hex
2	99-3757	1	Coupling-Flex
3	32121-69	2	Pin-Spring
4	110-2382	1	Shaft-Drive, Reel
5	107-3205	1	Seal-Oil
6	32151-51	1	Ring-Retaining
7	251-336	2	Bearing-Ball
8	99-2079	1	Spacer
9	33124-025	2	Screw-CARR
10	99-2083	1	Housing-Bearing
11	110-2381	1	Spacer
12	110-2299	1	Drive Plate ASM
12:2	93-9389	1	Decal-Warning, Belt (Japan)
12:2	93-9356	1	Decal-Warning, Belt
13	3256-23	4	Washer-Flat
14	117-1350	3	Nut-HF, Lock

Ref.	Part Number	Qty.	Description
15	107-9044	1	Pulley-22 Tooth
16	99-2022	1	Belt
17	110-2391	1	Washer
18	115-1115	2	Nut-Lock, HHF
19	110-2348	1	Cover-Reel
20	107-3237	2	Spacer
21	107-3228	1	Spacer-Seal
22	99-2087	1	Spacer
23	3257-30	2	Key-Woodruff
24	3255-8	1	Washer-Lock
25	33114-016	1	Screw-HH
26	110-2324	1	Grommet
27	33114-030	2	Screw-HH
28	33024-00	2	Nut-Lock, NI
29	110-2386	1	Pulley-27 Tooth
30	119-4140	1	Tab-Retainer

Attachments and Accessories

For 04202 11-Blade Cutting Unit Greensmaster Flex 21 Traction Unit

Product Name	Model/Part
Groomer Drive System	04224
21 inch Carbide Grooming Reel	04227
21 inch Grooming Brush	04228
High Height-of-Cut Arms (Qty 1)	120-9600
Full Roller ASM	106-6945
Roller Seal Replacement (Qty 1)	107-1594
8 Blade Reel ASM	107-7634
Wide Wiehle Roller Kit	107-9038
Full Roller Kit	107-9039
Reel Seal Rebuild Kit	108-3160
Bedknife-Microcut, Extended	108-4303
Roller Extension Kit	108-4333
Front Scraper Kit for Narrow Wiehle Roller	108-6468
Front Scraper Kit for Wide Wiehle Roller	110-3961
Front Scraper Kit for Full Roller	110-3962
Front Brush Kit for Narrow Wiehle Roller	110-3963
Front Brush Kit for Wide Wiehle Roller	110-3964
Front Brush Kit for Full Roller	110-3965
Front Comb Kit for Narrow Wiehle Roller	110-3966
Front Comb Kit for Wide Wiehle Roller	110-3967
Front Comb Kit for Full Roller	110-3968
Rear Roller Scraper Kit with Roller	112-9352
Bedknife-Tournament Cut	93-4263
Bedknife-Low Cut	93-4264
Wiehle Roller ASM (2.5in Dia)	93-9045
Height-of-Cut Bar	94-9010
Bedbar-Aggressive	99-3794-03
14 Blade Reel ASM	115-4289
Basket Stiffner Kit	115-1749
Bedknife-Edgemax, Microcut	115-1880
Bedknife-Edgemax, Tournament Cut	115-1881
Bedknife-Tournament, Extended	108-4302
Rear Roller Adjustment Kit	114-4630

Notes:

Notes:

Notes:



Count on it.