FORM NO. 3310-107 Rev. B

TORO®

MODEL NO. 25313 – 40001 & UP
(FORWARD/REVERSE DRIVE)

OWNER'S MANUAL

31'' WHIRLWIND®

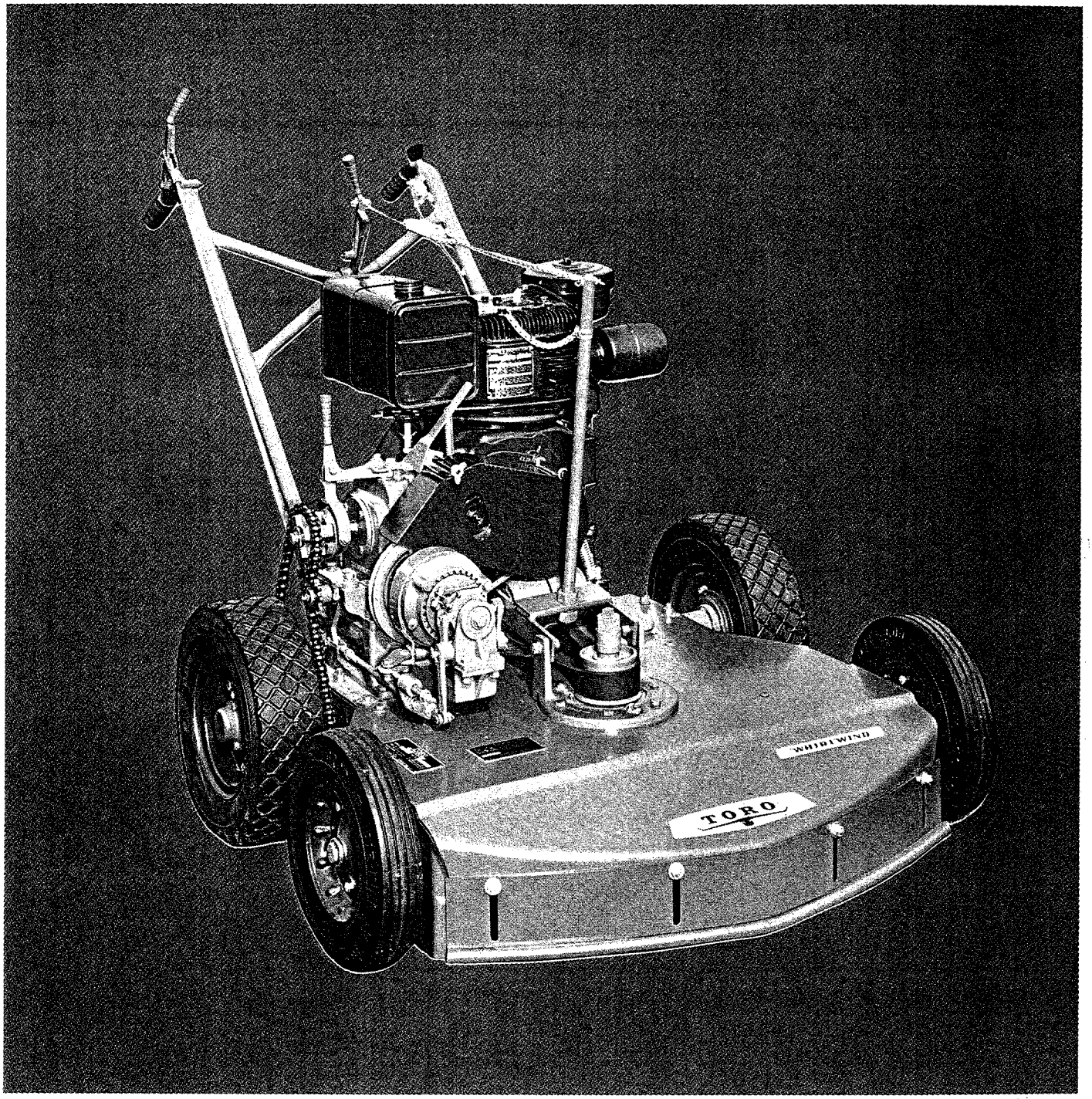

Price $1.00

TO THE TORO OWNER

This Owner's Manual has been especially prepared for your information and guidance in the operation and care of your new 31" Whirlwind.

Properly operated and maintained, this 31" Whirlwind will respond quickly and easily to every reasonable demand and give years of reliable service.

Toro 31" mowers are manufactured by an organization of mowing machinery specialists. Each machine is carefully inspected and tested before leaving the factory. For best performance from your 31" Whirlwind, study this manual for regular maintenance procedures.

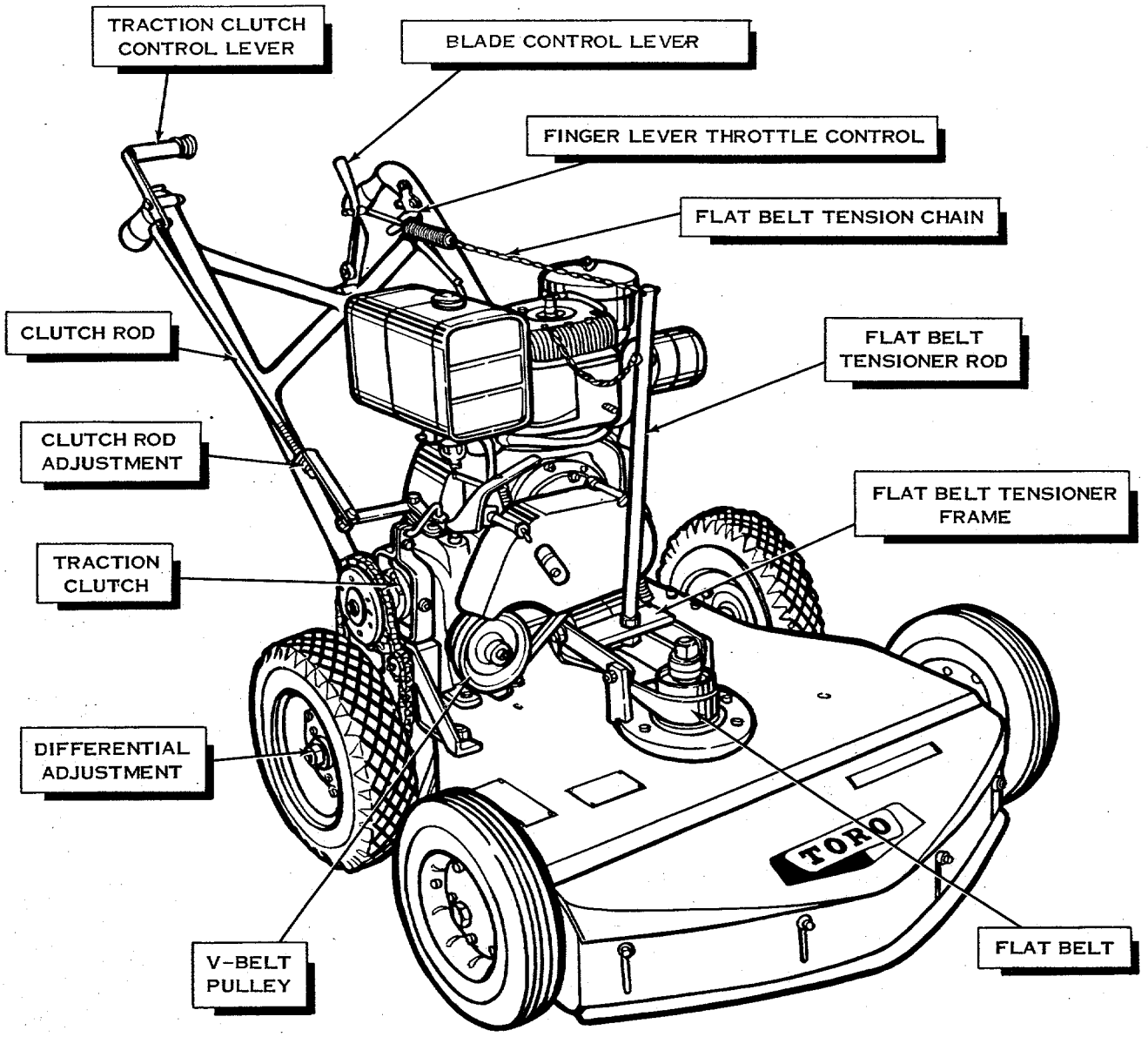

TORO 31" WHIRLWIND

Copyright 1974 by
The Toro Company
Bloomington, Minnesota 55420 U.S.A.

SPECIFICATIONS

ENGINE: 9 H. P., 4 cycle, air cooled, oil bath air cleaner.
FUEL TANK CAPACITY: 6 quarts
CUTTER BLADE CLUTCH: Tight slack flat belt
TRACTION CLUTCH: Rockford #LMS-114 Disc type clutch on speed reducer input shaft and jaw type clutch on speed reducer output shaft. (Reverse Drive)
TRACTION CLUTCH: Rockford LMA-2-1AD Disc type clutch on speed reducer output shaft. (Forward Drive)
CUTTER BLADE DRIVE: 1-1/2" flat belt on 3" O.D. and 3-3/8" O.D. pulleys.
TRACTION DRIVE: "A" Section Industrial heavy duty "V" belt on 2.76 P.D., 3.63 P.D. or 4.32 P.D. engine pulley to 6.32 P.D., 5.32 P.D. or 4.76 P.D. pulley on speed reducer. 5/8 pitch x 1/4" wide roller chain on 17 T. and 48 T. sprockets from speed reducer. (Reverse Drive)
TRACTION DRIVE: "A" Section Industrial heavy duty "V" belt on 2.5 P.D. or 2.0 P.D. engine pulley to 3.5 P.D. or 4.0 P.D. pulley on speed reducer, 5/8" pitch x 1/4" wide roller chain on 27 tooth and 36 tooth sprockets from speed reducer. (Forward Drive)
REDUCTION, ENGINE TO WHEELS: 64.7:1, 41.4:1, or 31.1:1, depending on pulley groove selected, including 10:1 reduction in speed reducer. (Reverse Drive)
REDUCTION, ENGINE TO WHEELS: 41:1 or 28:6:1, depending on pulley groove selected, including 15.34:1 reduction in speed reducer. (Forward Drive)
WHEELS: #14 Ga. Steel Disc
TIRES: Front - 12 x 3.00 Semi Pneumatic
Rear - 14 x 4.00 Semi-Pneumatic
DIFFERENTIAL: Enclosed, 3 Pinion Bevel gear
GROUND SPEED: 3 MPH or 4.0 MPH @ 3000 R.P.M. depending on engine pulley groove selected. (Forward Drive)
HEIGHT OF CUT: 9/16" to 3-9/16" adjusted by spacers on cutter blade shaft.
WIDTH OF CUT: 31"
HOUSING: Fabricated of 3/16" steel plate, reinforced with $1\frac{1}{4}$" x $1\frac{1}{4}$" x $\frac{1}{4}$" angle iron. Adjustable front guard, Hinged rear guard.
HANDLE: $1\frac{1}{4}$ O.D. x #13 Ga. welded steel tubing.
DIMENSIONS: Width 39"
Length 66" Including handle
Height 36"
WEIGHT: 424 pounds w/o reverse
454 pounds with reverse
OPTIONAL EQUIPMENT: Sulky - Model No. 60003; Leaf Mulcher - Model No. 4-8989; Non-Suction Blade - Model No. 5-0085.
REVERSE UNIT: Enclosed bevel gear mounted on speed reducer input shaft.
LUBRICATION REQUIREMENTS: Speed reducer-11 oz. SAE #140 gear oil. REVERSE-3 oz. SAE #140 gear oil.

THE TORO PROMISE

It is Toro's policy to design and produce Toro products to provide our customers with a high level of performance and durability in normal operation. Our products, however, are produced in high volume, and it is inevitable that occasionally a unit will reach a customer with a defect in materials or workmanship which causes that unit to fall below the normal high level of Toro performance. Invariably, such a defect will be noticed in a residential product within one year, and in an institutional product within ninety days after purchase. Recognizing this possibility, Toro has established a simple guarantee policy and procedure that is intended to assure customer satisfaction. This guarantee statement is as follows:

The Toro Promise

Toro Manufacturing Corporation promises to repair any TORO product for the original purchaser if defective in materials or workmanship. The following time periods from the date of purchase apply:

Residential products	1 year
Residential products used commercially	45 days
Institutional products	90 days

The costs of parts and labor are included, but the customer pays the transportation costs. Just return any residential product to a TORO Service Dealer, or any institutional product to a TORO distributor.

Should you feel that a product is defective, and wish to rely on The Toro Promise, the following procedure is recommended:

1. Contact any TORO dealer or distributor, but preferably the dealer or distributor from whom you purchased the product.
2. He will instruct you to either return the product to him, or tell you the name and address of your nearest TORO Service Dealer if the product is to be returned to such dealer.
3. Take the product and your original sales slip, or other evidence of purchase date, to the servicing dealer.
4. The servicing dealer will inspect the unit, advise you whether the product is defective and, if so, make all repairs necessary to correct the defect without extra charge to you.

If for any reason you are dissatisfied with the dealer's analysis of the defect or the service he performs, we urge you to contact us. Write:

TORO "Customer Care" Department
8111 Lyndale Avenue South
Bloomington, Minnesota 55420

SETTING UP THE TORO 31 - IN. WHIRLWIND

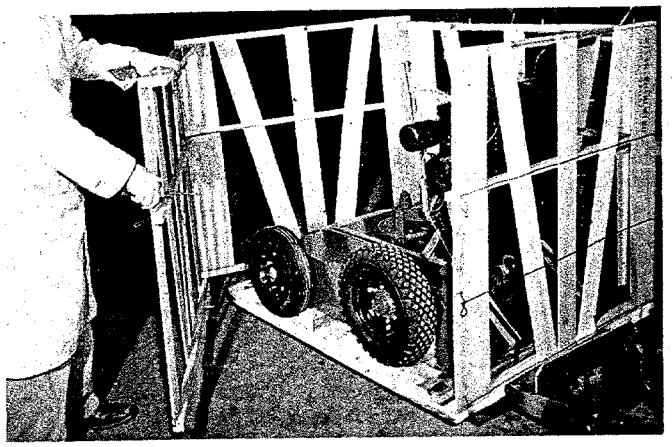

The following steps are necessary to completely set up your mower ready for operation after delivery from the dealer:

1. Crating and pallet to be removed.
2. Handle and controls to be assembled.
3. Lubrication and adjustments

❶ REMOVE MOWER FROM CRATING AND PALLET

When uncrating the mower, open the wire fasteners at left rear of the mower as shown, remove the top, and "peel" the crate sides from the mower as shown. Unstrap the mower from the palletized crating base. Be sure to remove the bag of small fasteners which are attached to the inside of the crate.

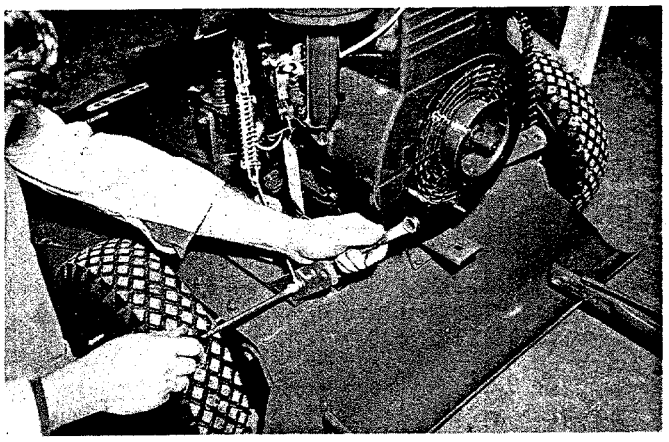

❷ REMOVE TENSION CHAIN FROM HANDLE BRACKET

When shipped, the blade engagement lever tension spring and chain are fastened to the left handle bracket of the mower. The other end of the chain is fastened to the rod which rises vertically from the flat belt tensioner frame. The chain is fastened to the handle bracket only for shipping purposes.

Remove the end of the chain which is fastened to the left handle bracket at the bracket end only. Save the fasteners for use in connecting this chain to the blade engagement lever.

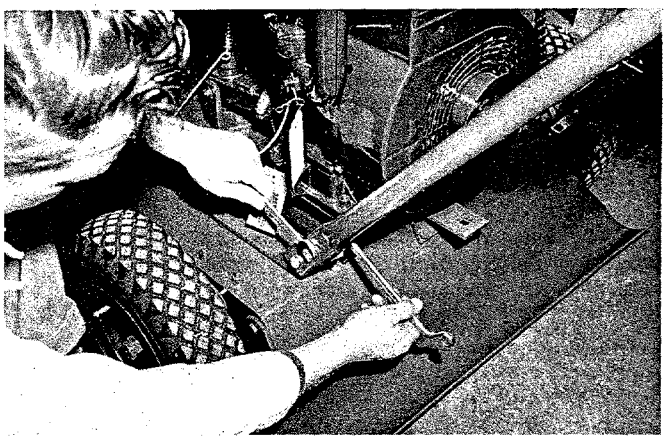

❸ INSTALL MOWER HANDLE TO HANDLE BRACKETS

The screws for mounting the mower handle will be found in the plastic bag fastened to the inside of the mower shipping crate.

You will note that there are three holes in each mounting bracket. The lower hole is the pivot hole and should be fastened first. The remaining two holes in each bracket are for high or low handle height adjustment. Pivot the handle to the desired angle and insert fastening screws through the applicable bracket holes as shown. The lower bracket hole gives a higher handle adjustment. The upper holes are for lower handle height. Fasten and tighten all four handle and bracket screws firmly.

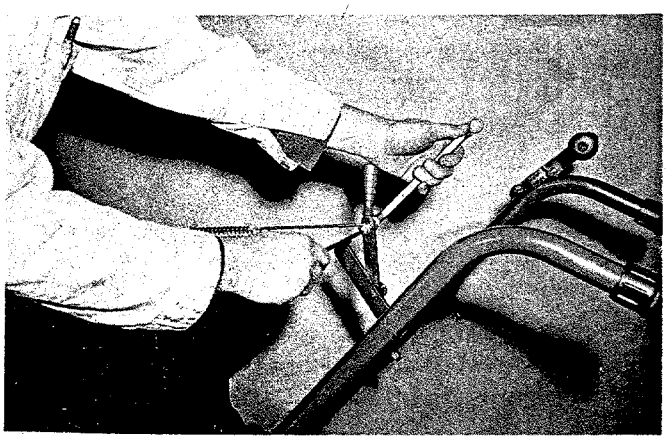

❹ FASTEN CHAIN TO BLADE ENGAGEMENT LEVER

Fasten the chain and spring to the lever which is mounted at the center of the mower handle.

First advance the lever to its forward position (as far forward as it will go). Then fasten the spring hook extension to the lever as shown, using the fitting with which this extension was fastened to the handle-bracket when the mower was delivered. The spring hook extension should be fastened to the lever in such a way that it is free to pivot as the lever is moved back and forth.

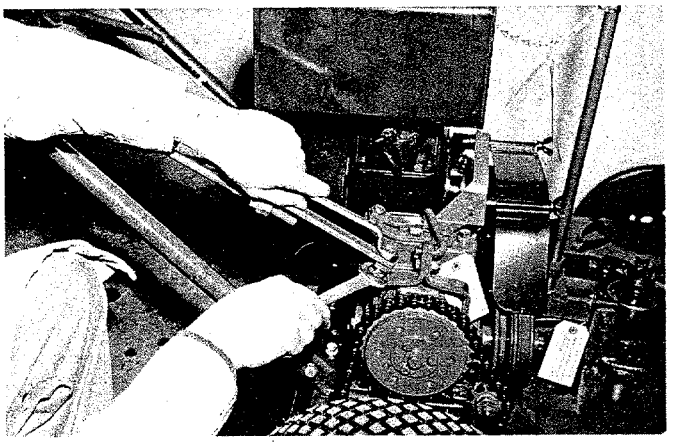

5 ATTACH TRACTION CLUTCH CONTROL ROD

The traction clutch rod is secured to the handle of the mower when delivered. After installation of the handle, the rod should be fastened to the clutch lever arm on the right side of the mower as shown. The clutch rod has an adjustment for high or low handle height as shown in section 8 below. This rod must be adjusted for either height position to which the handle has been installed. Tighten the clutch control rod fasteners to the lever arm on the mower and lock with cotter key after rod length has been adjusted.

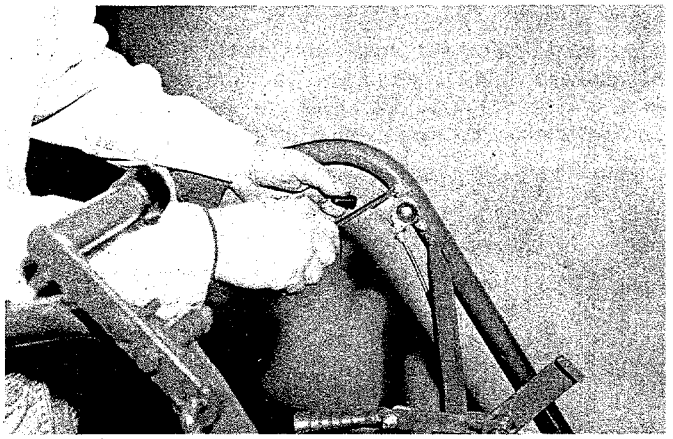

6 ATTACH THROTTLE CONTROL LEVER TO HANDLE

Attach the throttle control and throttle control wire casing to the inside of the left mower handle as shown. When delivered, the throttle control will be found wrapped around the engine.

UNWRAP THIS CONTROL WIRE CAREFULLY AS IT IS IMPORTANT TO PREVENT THIS WIRE AND CASING FROM GETTING KINKED BEFORE OR DURING INSTALLATION.

Fasten the lever control to the inside of the mower handle as shown.

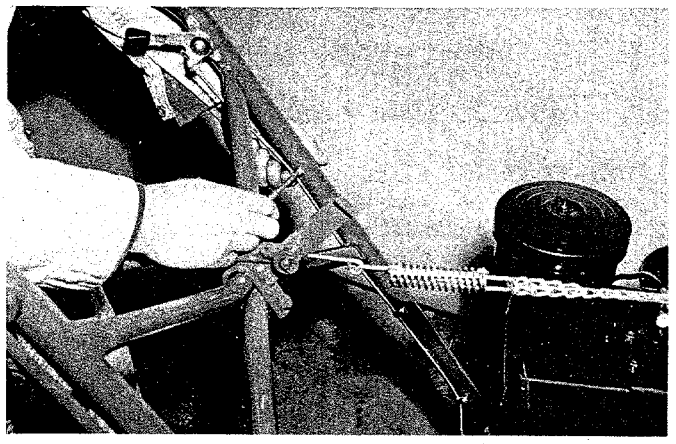

7 FASTEN THROTTLE CONTROL CASING TO HANDLE

Attach the throttle control wire casing down the inside of the left mower handle by means of the screws and clips found in the plastic fittings bag. There are three tapped holes located inside the left mower handle. Attach the screws and clips found in the bag; insert the control wire casing under the clips and tighten the screws securely.

THE LOOP IN THE CASING FROM THE ENGINE TO THE HANDLE SHOULD NOT BE KINKED either during or after installation.

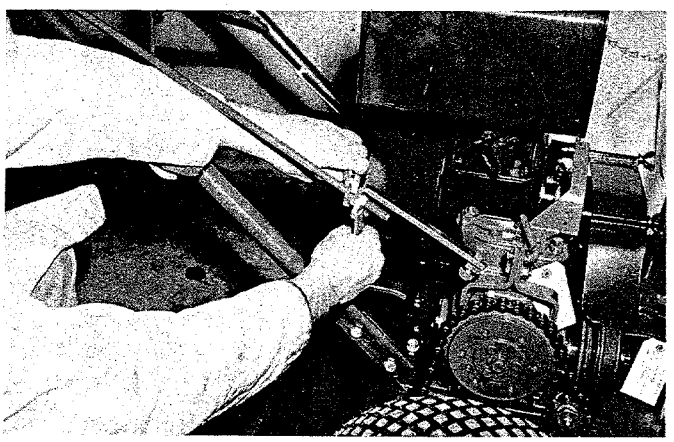

8 ADJUST THE CLUTCH CONTROL LEVER ROD

Whenever handle height is changed, the length of the clutch control lever rod must be changed accordingly. To change handle height, first loosen the two adjusting nuts on the control rod as shown, then change the handle height by removing top handle bracket screws, pivoting the handle into new position and replacing the handle bracket screws, tightening all four handle bracket screws securely. Then tighten the adjusting screws in position to provide proper lengthening or shortening of the clutch control rod as shown.

THE MOWER IS NOW READY FOR LUBRICATION

OIL AND GASOLINE

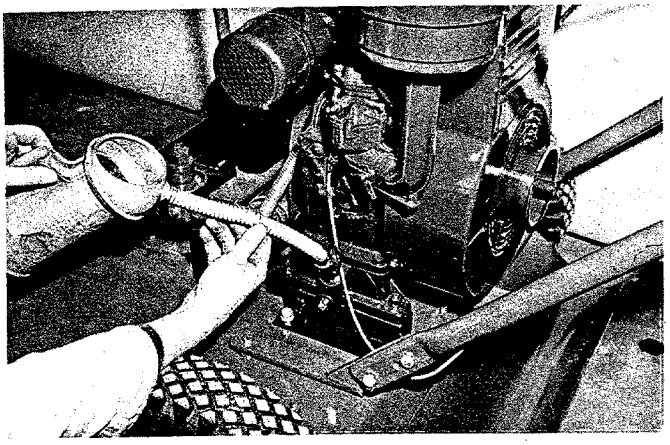

❶ FILL THE ENGINE CRANKCASE - Refer to engine manual for correct weight of oil. With the mower on a level surface, fill until oil level reaches the top of the crankcase oil fill opening shown here.

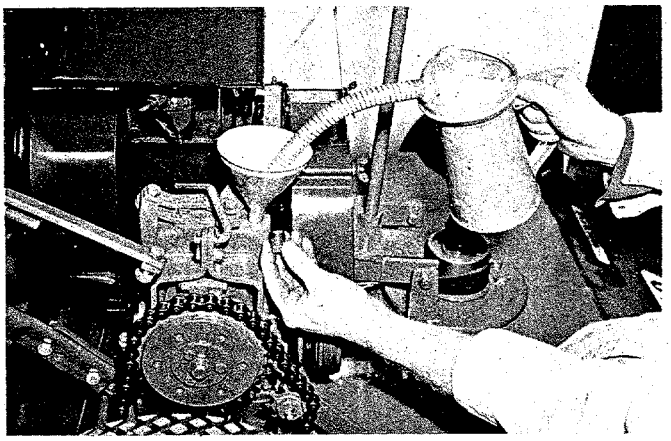

❷ CHECK LUBRICATION IN GEAR CASE - The gear case is filled with S. A. E. #140 gear oil at the factory Check to see that this is filled. Recheck at least twice every season. Drain and refill once a year.

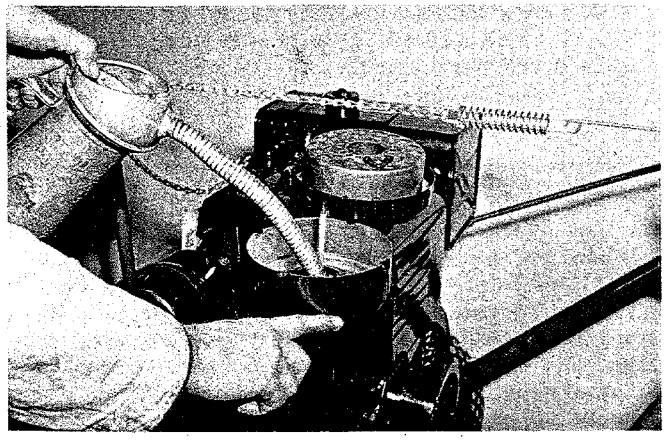

❸ FILL THE ENGINE AIR CLEANER - Use S.A.E. #20 motor oil. Fill to the level marked on the outside of the cleaner casing as pointed out here.

❹ CHECK ZERK FITTINGS - Filled at the factory.

❺ FILL FUEL TANK WITH CLEAN, FRESH REGULAR GASOLINE.

ENGINE STARTING

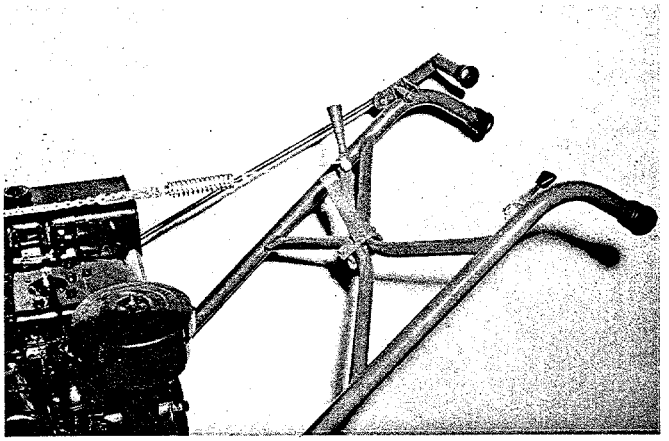

❶ SET HANDLE CONTROLS FOR STARTING - The traction clutch control (right handle) is "disengaged." Blade control lever (center) is forward (disengaged). Throttle lever is half open. Choke lever (lower left) is on full choke (forward) for starting.

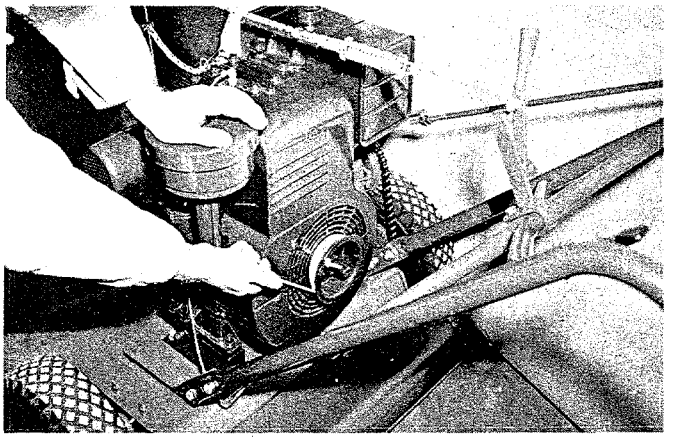

❷ PULL STARTER CORD <u>STRAIGHT OUT</u> - When the engine is cold, full choke may be required for one or two pulls before starting. Under normal conditions partial or no choking is required for starting.

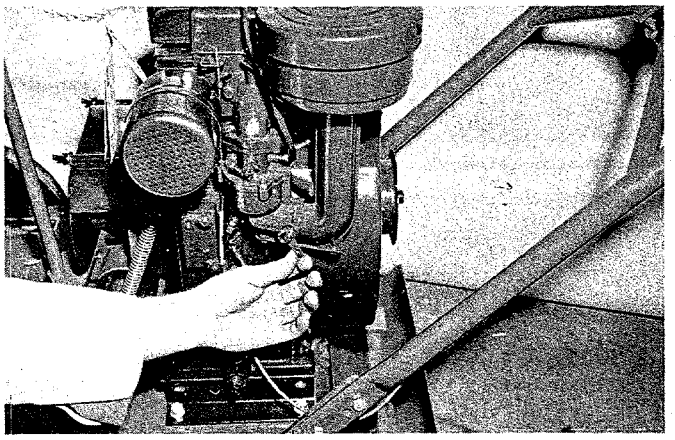

❸ ADJUST THE CHOKE TO BEST OPERATING POSITION - Move the choke lever back as shown as soon as the engine starts. Adjust the throttie control handle lever to "idle" position (raised).

READ THE ENGINE MANUAL FOR BEST OPERATION

MOWER OPERATION

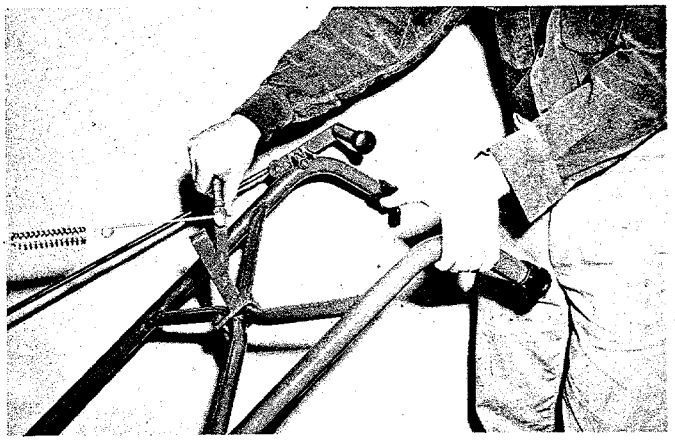

❶START THE BLADE IN ROTATION - First set the engine throttle control at reduced speed; then engage the center blade control lever gradually by pulling it back as shown. Increase throttle slowly.

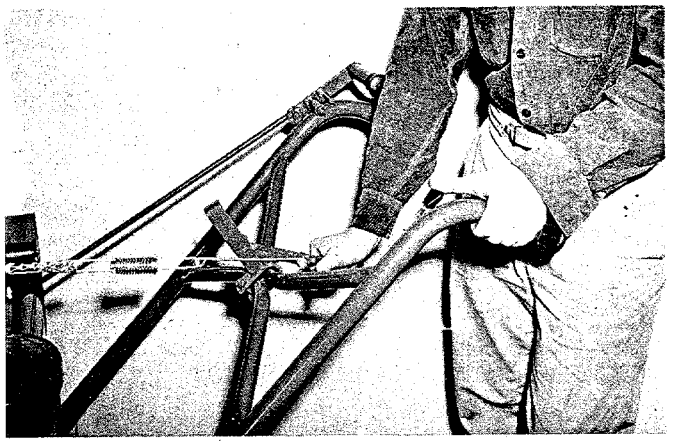

❷WITH THE BLADE ENGAGED, INCREASE ENGINE SPEED - Prepare to engage the forward traction drive clutch control. Throttle should be depressed only enough to prevent stalling when engaging clutches.

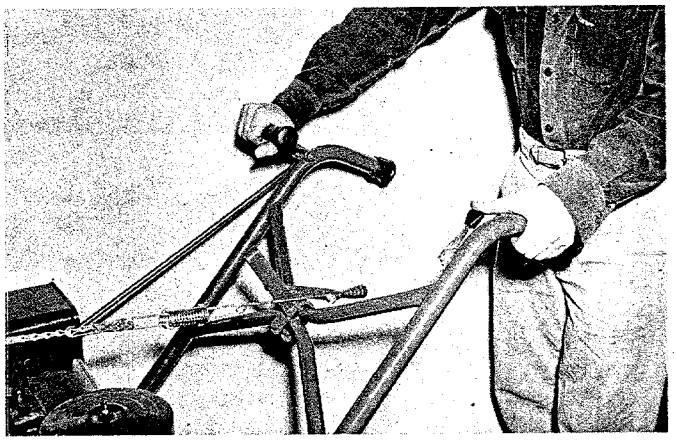

❸ENGAGE THE TRACTION DRIVE CLUTCH LEVER - Increase engine throttle as the clutch is engaged gradually so the mower moves forward smoothly. Adjust the throttle to desired speed.
NOTE - It is advisable to practice driving and control of the mower without blade operating when the operator is unfamiliar with this type of mower.

CUTTING HEIGHT ADJUSTMENT

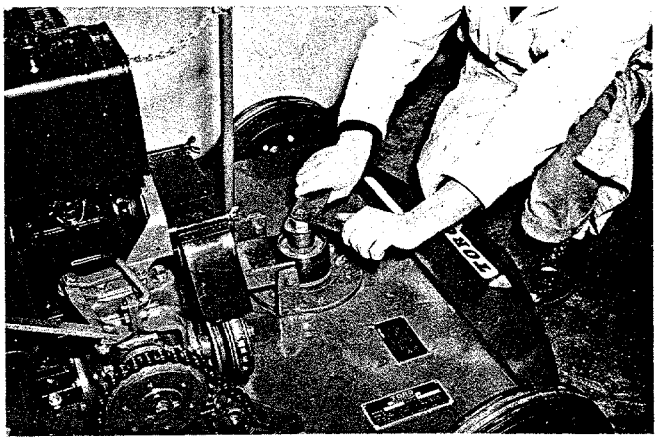

❶REMOVE TOP BLADE SHAFT LOCK NUT AND SPACERS - Use wrenches provided in plastic bag with mower. Tip mower back on handle; remove air cleaner, so blade assembly can be removed from below.

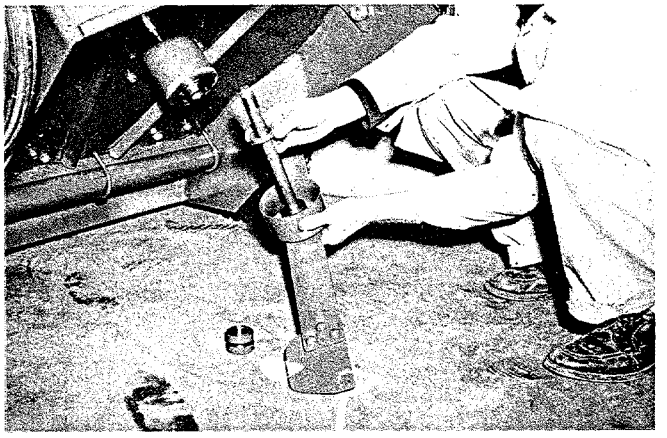

❷REMOVE BLADE SHAFT AND REPOSITION SPACERS - Height of cut is controlled with spacers on the shaft located above and below the housing. Four spacers provide adjustment from one to four inch height of cut in 1/4 inch increments. Factory setting is 2 inches.

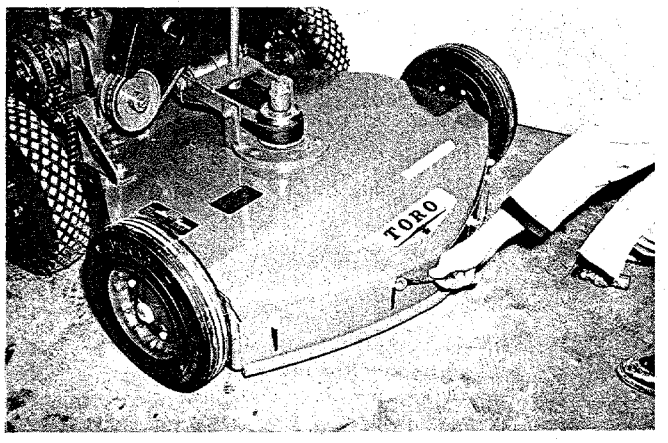

❸REASSEMBLE SPACERS ON SHAFT AND SECURE - Then change height of the front mower guard by means of adjustment slots. Position guards 1/8 inch below the blade. TOP BLADE SHAFT NUT MUST BE TIGHT AT ALL TIMES:

DISCONNECT SPARK PLUG LEAD WIRE BEFORE WORKING ON BLADE ADJUSTMENT.

SPEED ADJUSTMENT

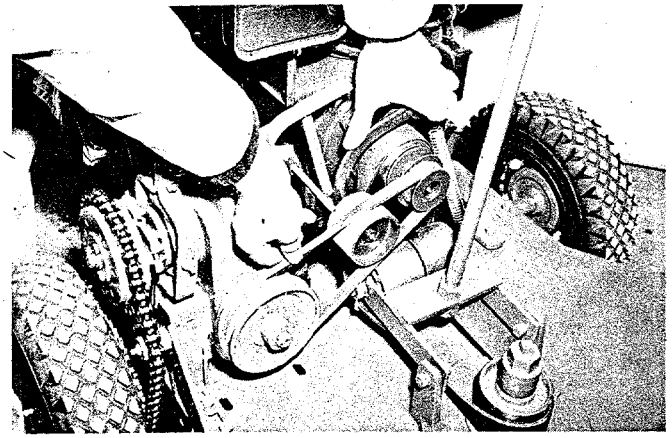

❶ TO CHANGE FORWARD GROUND SPEED REPOSITION THE V-BELT ON MULTI-GROOVE PULLEYS - The pulley groove closest to the engine provides high speed and the groove away from the engine provides low speed. It is necessary first to remove the V-belt guard by unscrewing wing nut fasteners. To move belt:

1. Remove the belt guard housing over the pulleys.
2. Hold down the idler arm to relieve belt tension.
3. Move the V-belt to the proper groove, release tension on the idler arm, and replace belt guard.

❷ TO REPLACE THE V-BELT - Follow the same procedure as outlined above.

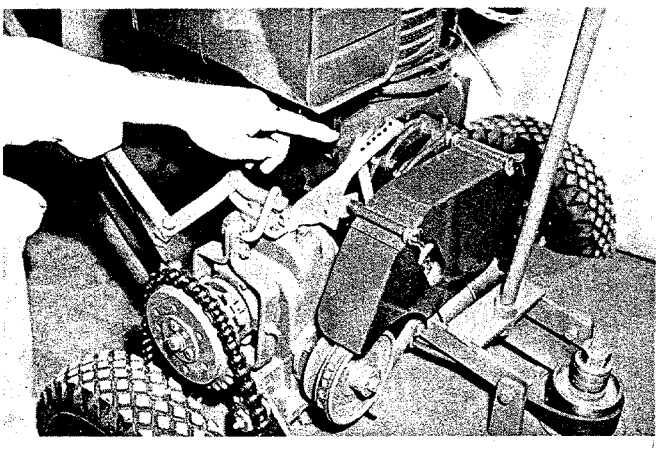

❸ TO CHANGE TENSION ON THE V-BELT IDLER PULLEY - Disconnect the idler arm spring at the top from the hole in the pulley guard bracket arm pointed out above. This arm has a series of holes for the spring, with tension increased toward top end of the arm. Fasten the spring in the hole providing proper idler arm tension for belt condition.

❹ CHECK THE V-BELT ALIGNMENT - Be sure that the V-belt is aligned properly on the pulleys and that the idler tension is adjusted to prevent slipping.

BLADE DRIVE BELT ADJUSTMENT

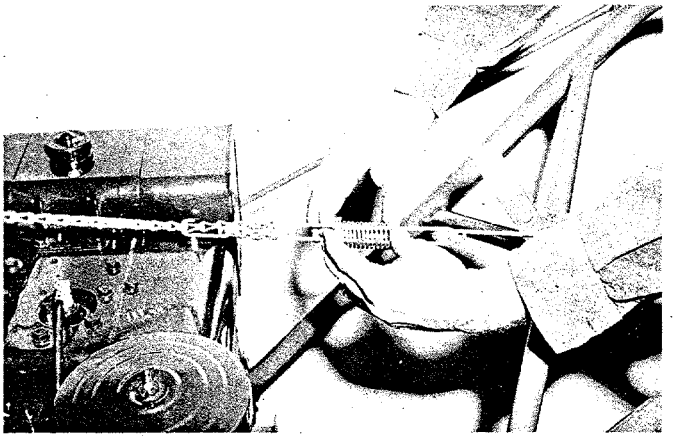

❶ CHECK FOR PROPER TENSION ON THE FLAT BELT which drives the blade by first pulling back on the blade handle control lever to fully engaged position. Then squeeze the tension spring linked to the connecting chain as shown above. When properly adjusted it should be possible for the average operator to COMPRESS THE SPRING AN ADDITIONAL 1/4 INCH WHEN HELD AND COMPRESSED AS SHOWN.

❷ SHORTEN OR LENGTHEN THE CONNECTING CHAIN to obtain the proper tension as determined by the method shown above.

❸ ENOUGH TENSION SHOULD BE MAINTAINED ON THE FLAT BELT TO PREVENT THE BELT FROM SLIPPING ON THE ENGINE PULLEY:

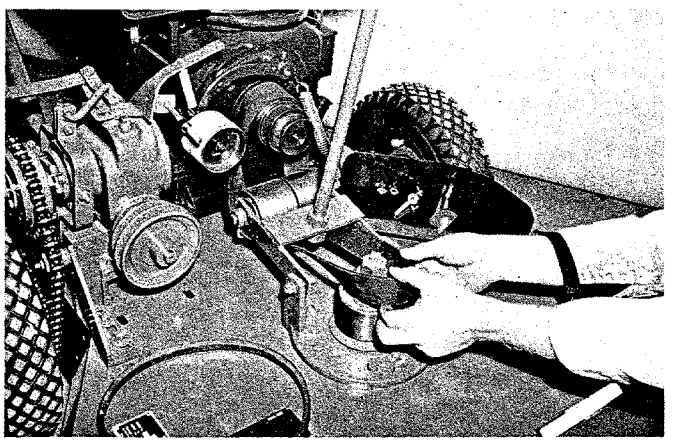

❹ TO REPLACE THE FLAT BELT, FIRST REMOVE THE TRACTION DRIVE V-BELT. It is then possible to remove the belt from the blade shaft and engine pulley.

❺ BE SURE THAT THE BLADE CONTROL LEVER IS DISENGAGED BEFORE CHANGING THE FLAT BELT. Make sure that the flat belt fits between the guides and the tension pulleys and that the INSIDE surface of the belt is against ALL PULLEYS.

CLUTCH ADJUSTMENT

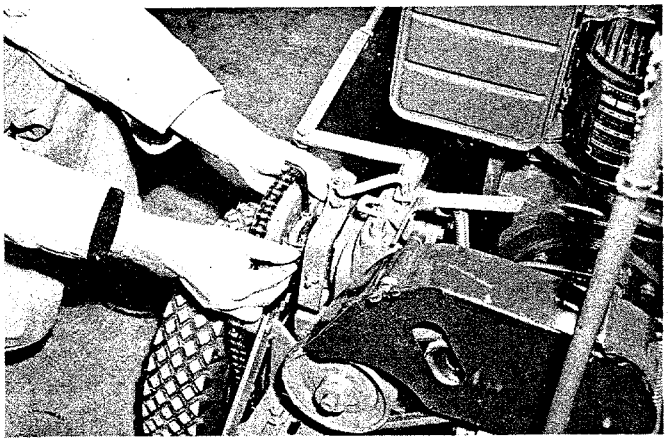

❶ TO CHECK THE CLUTCH FOR PROPER ADJUSTMENT - First throw the clutch rod handle control forward until the clutch locks in its operating position. Pull the mower backwards. If the wheels skid, the adjustment is correct.

❷ IF THE CLUTCH SLIPS - Allowing the wheels to turn, it is necessary to adjust the clutch, using the Allen wrench provided in the plastic fittings bag which came with the mower.

❸ LOOSEN CLUTCH SPIDER SET SCREW - This is located in the center of the roller lever spider.

❹ TO TIGHTEN THE CLUTCH - Rotate the spider toward the REAR of the mower until proper tension is obtained, then tighten and re-check as above, making further adjustment if necessary.

❺ TO LOOSEN THE CLUTCH - Turn the spider toward the FRONT of the mower, tighten the setscrew and re-check, making further adjustments if necessary.

CAUTION - Be careful to set the clutch ONLY tight enough to prevent slipping. After a new mower has been in use for a short time, a readjustment will be necessary to take up the "run-in" wear on the friction discs. From time to time after that, additional adjustments will be required to take up wear. It is advisable to make the over-all check described above each time the mower is used, to insure longer disc life.

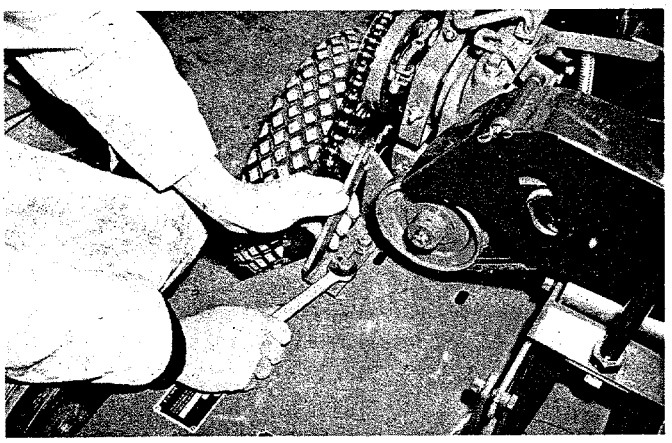

TO ADJUST DRIVE CHAIN TENSION - Release clutch control lever and block right rear wheel off the ground. Loosen idler bracket bolts as shown and move the bracket forward until the chain is snug. Retighten idler bracket securely.

DIFFERENTIAL ADJUSTMENT

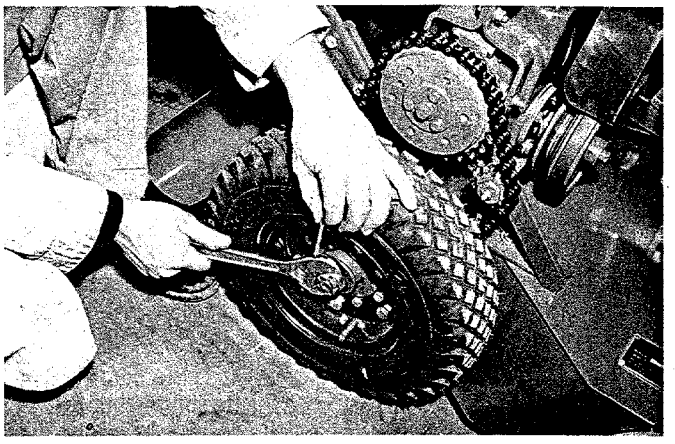

❶ TO ADJUST THE DIFFERENTIAL - Raise the rear left wheel off the ground. Secure in such a manner that it CANNOT TURN.

❷ THEN ON THE RIGHT WHEEL - Remove cotter pin and tighten the nut on the right wheel axle until the gears bind and will not allow the nut to turn freely.

❸ WHEN THE RIGHT WHEEL BINDS - Loosen the nut just enough (approximately the difference of one slot so that the cotter pin can be inserted in one of the two holes in the axle. There are two holes in the axle for the cotter pin.

❹ CHECK TO BE CERTAIN THAT THE WHEELS RUN FREELY - If not, back the nut off a little more, using the other cotter pin hole if necessary.

IT IS IMPORTANT THAT THE GEARS BE KEPT IN PROPER ADJUSTMENT - This can be easily and quickly checked by blocking up the rear of the mower, and checking the back-lash of the right wheel while the left wheel is held stationary. If there is more than a slight amount of back-lash, the gears should be tightened.

CARE OF YOUR MOWER

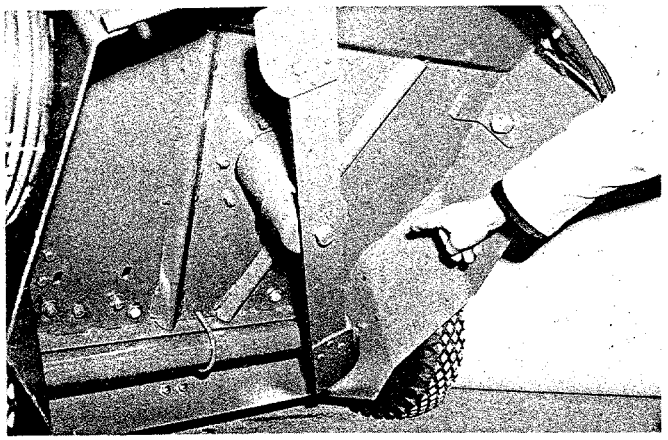

❶ KEEP THE MOWER CLEAN - Remove accumulations of dirt and old grass clippings from inside the housing with a putty knife or similar tool.

❷ KEEP ALL FASTENERS TIGHT.

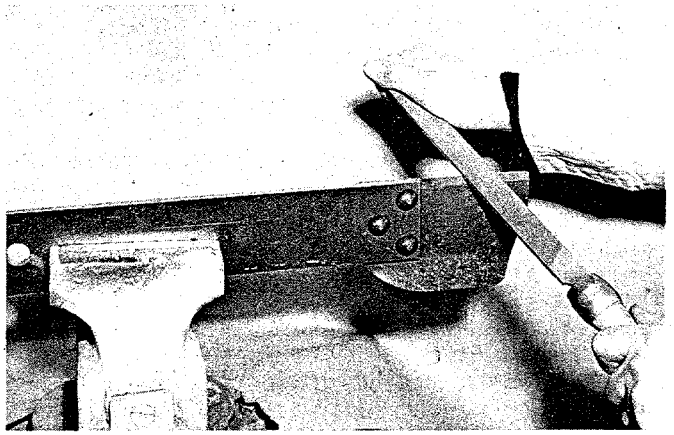

❹ KEEP BLADE SHARP - ALWAYS DISCONNECT SPARK PLUG LEAD WIRE WHEN REMOVING BLADE OR WORKING ON IT. Remove the blade and shaft, then unscrew the left-hand nut at the bottom of the blade shaft by holding squared top of shaft with a wrench. Secure blade for sharpening in a vise as shown. WHEN FILING BLADES MAINTAIN THE ORIGINAL ANGLE OF THE CUTTING EDGE AS CLOSELY AS POSSIBLE.

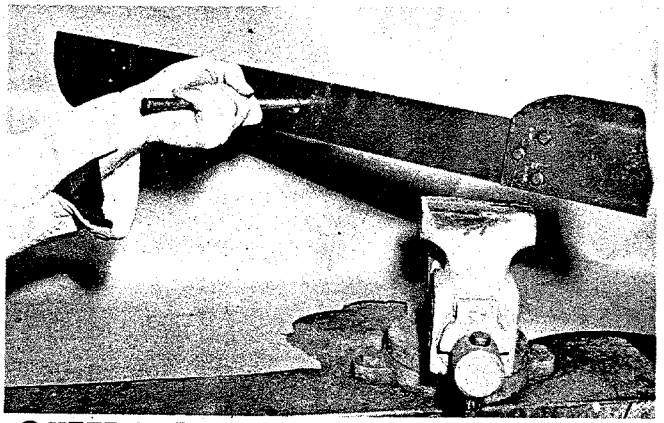

❺ KEEP THE BLADE IN BALANCE - Remove the same amount from each end. IF GRINDING WHEEL IS USED DO NOT "BURN" EDGES BY TOO RAPID GRINDING. Bar balance can be checked as shown.

LEAF MULCHING

OPTIONAL EQUIPMENT KIT NO. 4-8989

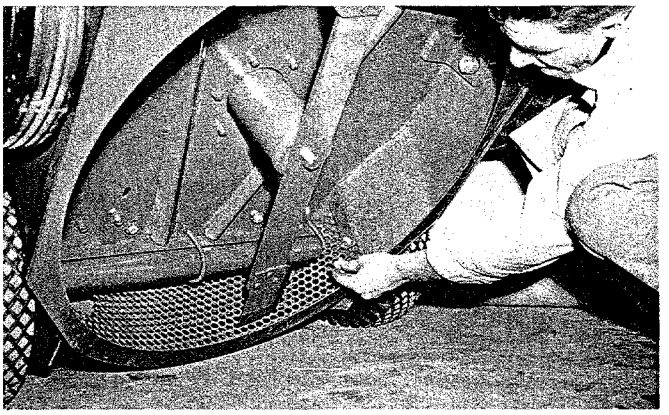

❶ TO PREPARE YOUR MOWER FOR LEAF MULCHING - First remove the air cleaner and set it on a level spot to prevent spilling oil when the mower is tipped back.

❷ Disconnect the spark plug lead wire, and tip the mower back on its handle.

❸ Place the leaf mulcher in the position shown under the mower and fasten at the inside rear with four screws provided.

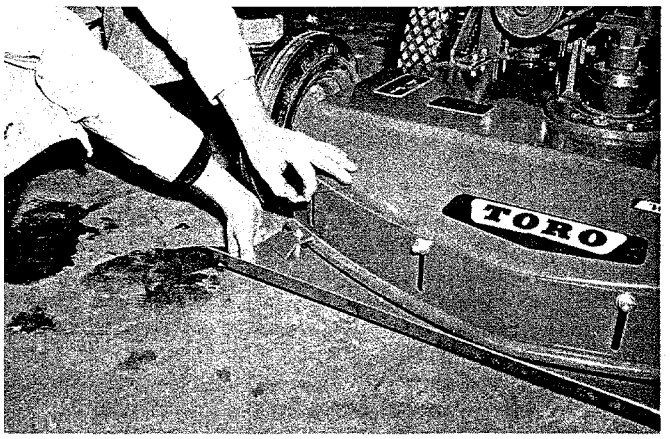

❹ FASTEN MULCHER TO THE FRONT MOWER GUARD - Use the clips and fasteners provided with the mulcher.

❺ HEIGHT OF CUT FOR MULCHING SHOULD BE SET HIGHER THAN FOR NORMAL GRASS CUTTING AS THE BLADE SHOULD CLEAR THE GRASS.

❻ DO NOT USE THE MOWER FOR GRASS CUTTING WITH THE LEAF MULCHER ATTACHED.

WINTER STORAGE HINTS

❶ BLOCK UP THE WHEELS to remove tire weight.

❷ RELIEVE TENSION on all belts and springs.

❸ FOLLOW ENGINE MANUAL INSTRUCTIONS for engine care and winter storage lubrication precautions.

❹ STORE IN A WARM DRY LOCATION if possible.

LUBRICATION

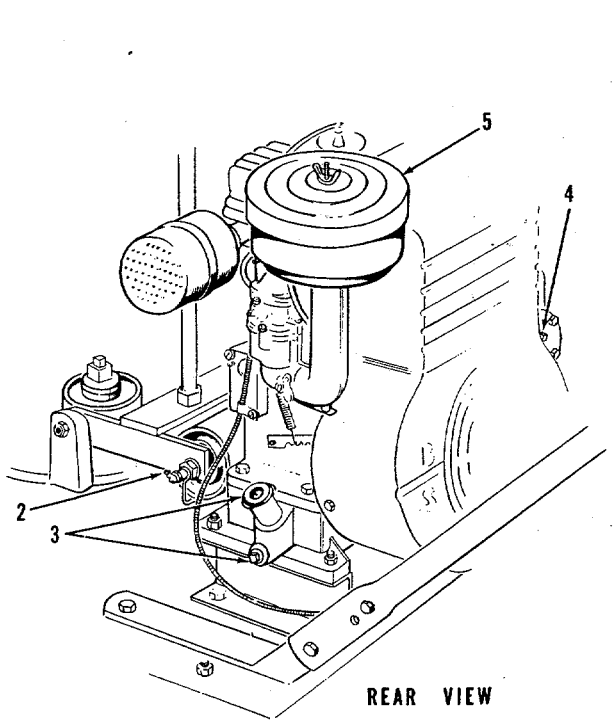

REAR VIEW

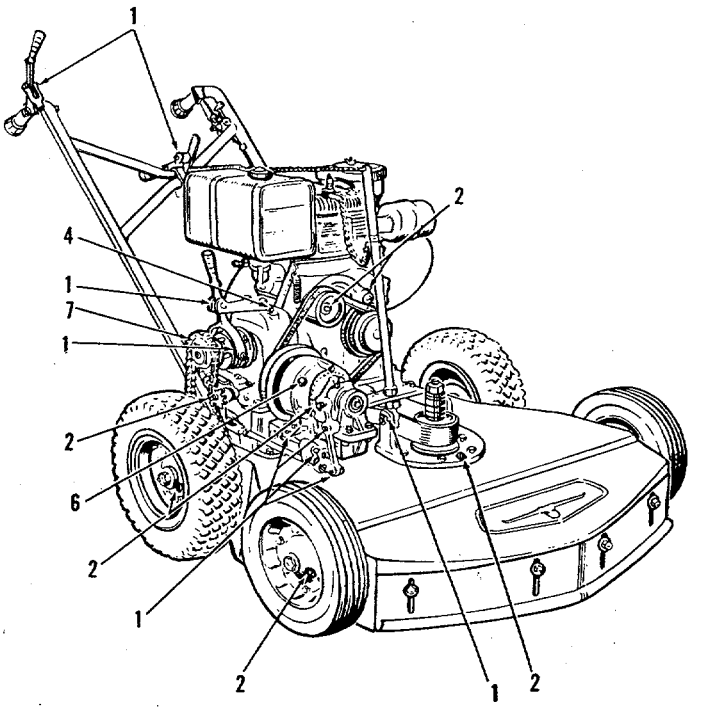

FRONT VIEW

LUBRICATION CHART

INSTRUCTIONS

1. PIVOT POINTS AND CONTROL CASING: Use lubricating oil; oil daily.

2. ZERK FITTINGS: Use a good grade of gun grease; grease after every 48 operating hours. CAUTION: Do not use too much grease. Two or three shots from gun is ample.

3. ENGINE: Refer to engine manual for engine maintenance requirements. Check oil level after every four hours of running. If oil is below filler opening, fill up to proper level. Study engine manual for further instructions.

4. SPEED REDUCER: Use a good grade of S. A. E. #140 gear oil. Check oil level of the gear case twice a season. Remove small plug on bearing cap. If oil flows out, no more is needed. If no oil flows, remove filler plug on top of gear case and add oil to bring it up to the proper level. To drain, remove top plug and drain plug. (Not oil level plug)

5. AIR CLEANER: Fill to level mark. Refer to engine manual for engine maintenance requirements. Change after each 25 operating hours, more often under dusty conditions. Study engine manual for further instructions.

6. REVERSE ATTACHMENT: Use a good grade of S. A. E. #140 gear oil; check periodically. To fill reverse housing, turn pipe plug to top, remove lower plug to check oil level. Remove top plug and fill till oil runs out of lower hole. To drain, remove both plugs and turn one to bottom.

7. CHAINS: Lubricate daily with S. A. E. #30 engine oil.

ADJUSTMENTS - REVERSE

FOR 31" WHIRLWIND WITH REVERSE

CHANGING GROUND SPEED

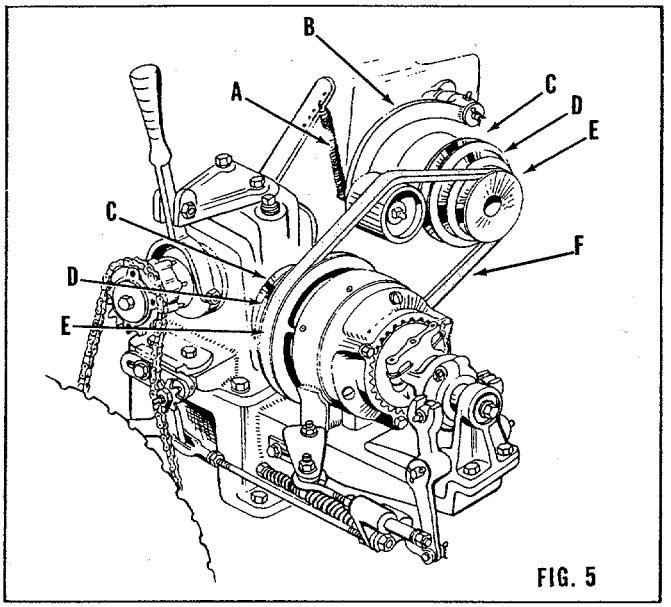

FIG. 5

Multi-groove pulleys are used to provide three optional ground speeds. (see Fig. 5). The groove "C" nearest to the engine are for the higher speed, and the other grooves "D" and "E" are for the lower speed. To shift the "V" belt "F" (see Fig. 5) from one speed to the other, disconnect spring "A" attached to the idler arm "B". Turn idler arm "B" up out of the way and remove belt "F" first from the reducer pulley and then from the engine pulley. Place belt "F" in the other groove selected of the reducer pulley and then slip it into the corresponding groove of the engine pulley. Re-connect tension spring "A" to the idler arm "B". Adjust spring tension for minimum slippage of "V" belt.

REPLACING "V" BELT

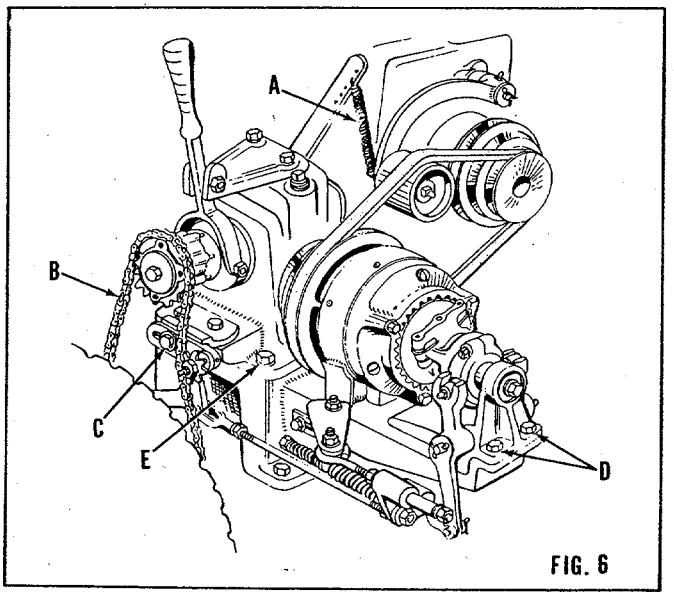

FIG. 6

To replace the "V" belt on your 31" G.K., first cut off the old belt, then remove chain "B" (see Fig. 6). Next loosen the two screws "D" that hold the bearing block to the speed reducer base. Next step is to remove the crank bracket "C". Then remove the four screws "E" that secure the housing to the speed reducer base. Then unhook spring "A" from the spring anchor. Now lift the housing off the base and install the new "V" belt by slipping it over the housing.

Make certain when replacing belt that the pulleys are lined up properly and that the idler assembly does not jump when the machine is running.

TRACTION DRIVE ADJUSTMENT

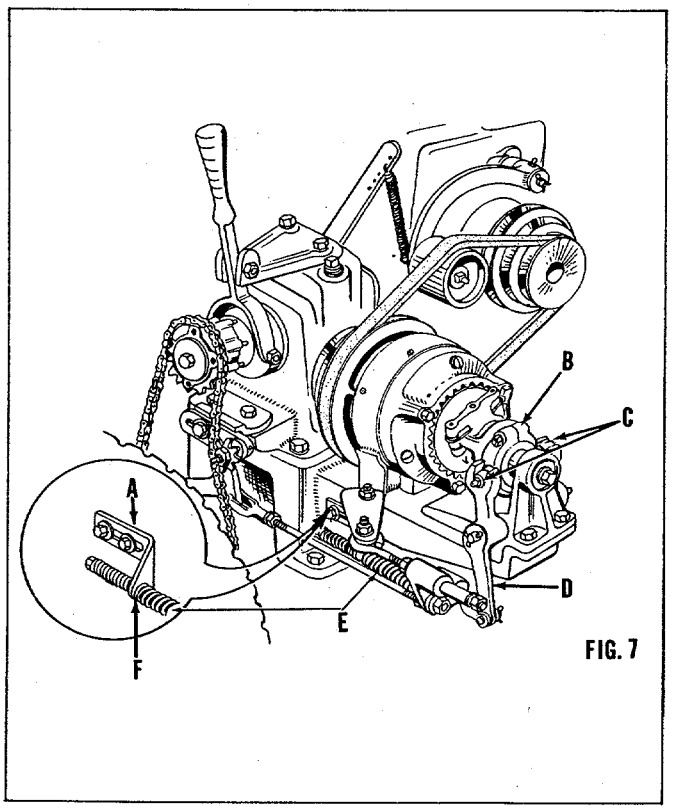

FIG. 7

The traction drive mechanism has been adjusted at the factory. Additional adjustments will be necessary to compensate for wearing of moving parts. In Fig. 7 be sure bracket "A" is positioned so there is approximately a 1/16" gap between bracket "A" and the cut washer just behind spring "E" at point "F", when the clutch is in the disengaged position. This adjustment should allow free movement of release bearing "B" in openings of clevis "D" at point "C". If binding should occur at points "C" a slight readjustment at point "F" will be necessary.

ADJUSTMENTS - REVERSE

FOR 31" WHIRLWIND WITH REVERSE

CLUTCH ADJUSTMENT

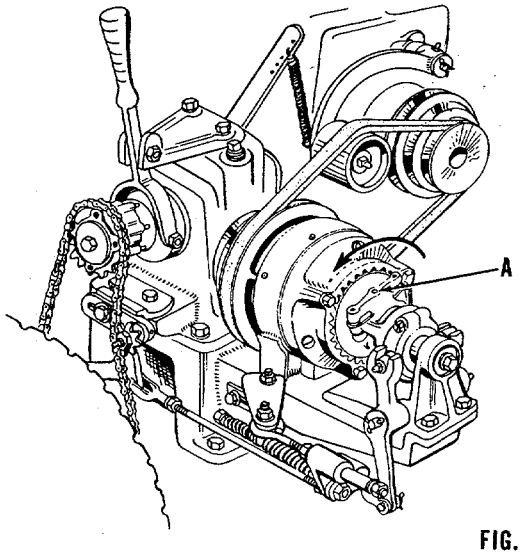

FIG. 8

When your 31" G. K. leaves the factory, the clutch itself is properly adjusted. To make an overall check, throw the clutch rod handle forward until the clutch locks in its operating position. Pull the mower backward a few inches. If the wheels skid, the adjustment is correct. If the clutch slips, allowing the wheels to turn, adjust the clutch as follows: Loosen setscrew "A" (see Fig. 8) in the roller lever spider of the clutch. Turn the spider counter-clock-wise (as shown by arrow in Fig. 8) about a $\frac{1}{4}$" turn, tighten setscrew "A" and recheck. Make further adjustment as needed to stop the clutch from slipping.

CAUTION: Be careful to set the clutch only tight enough to prevent slipping. After a new mower has been in use for a short time, a readjustment of the clutch will be necessary to take up the "run in" wear on the friction discs. From time to time after that, it will be necessary to make additional adjustments to take up the normal wear on the discs. It is best to make the "over-all" check, as described above each time the mower is used. This can be done in a few moment's time and will greatly prolong the life of the discs.

CONTACT YOUR LOCAL

TORO DEALER

FOR REPAIR PARTS,

MOWER SERVICE AND

LAWN CARE INFORMATION



BRAKE BAND ADJUSTMENT

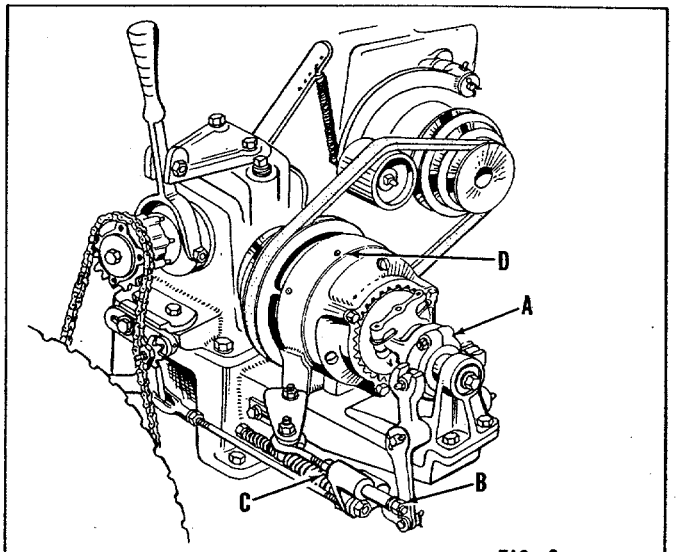

FIG. 9

Release clutch "A" (see Fig. 9) and adjust sleeve by releasing nut "B" to allow 1/16" clearance at "C" (See Fig. 9). On the engine side of the brake band "D" are two nuts for adjusting tension of the brake band. This band should be moved up tight and then released until there is no drag on the reverse mechanism with the control handle in a neutral position.

CHAIN ADJUSTMENT

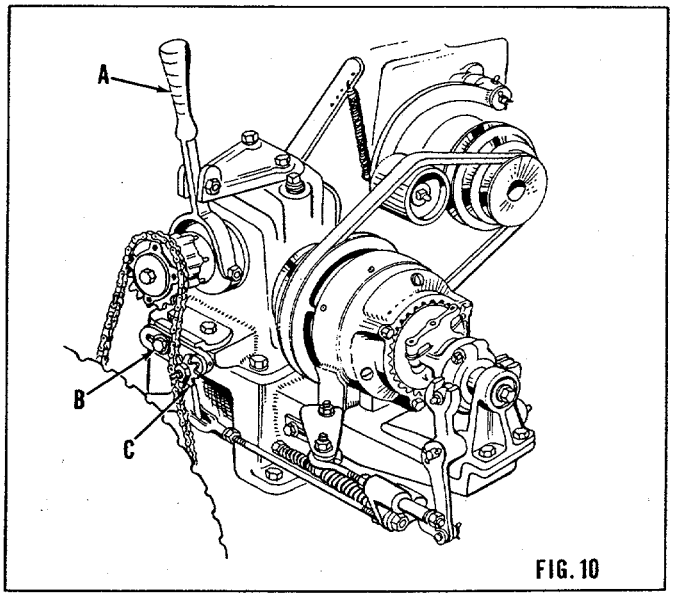

FIG. 10

To adjust chain tension, (see Fig. 10) release clutch lever "A" put block under axle to raise right rear wheel off of the ground; loosen bolt "B" and move idler sprocket "C" forward until chain is snug. Tighten bolt "B" by hand, turn wheel over to make sure the chain does not bind in any position. Then tighten bolt "B" securely.

MAINTENANCE RECORD

Date	Hours Used	Oil Change	Air Cleaner Service	Lubri-cation	Sharpen Blade	Winter Storage	Spring Service	Spark Plug Gap

MAINTENANCE RECORD

Date	Hours Used	Oil Change	Air Cleaner Service	Lubri-cation	Sharpen Blade	Winter Storage	Spring Service	Spark Plug Gap

MAINTENANCE RECORD

Date	Hours Used	Oil Change	Air Cleaner Service	Lubri-cation	Sharpen Blade	Winter Storage	Spring Service	Spark Plug Gap

LITHO IN U.S.A.