Form No. 3379-824 Rev A

TORO®

Count on it.

Operator's Manual

Walk-Behind Rotary Broom

Model No. 23740—Serial No. 314000001 and Up

Model No. 38700—Serial No. 314000001 and Up

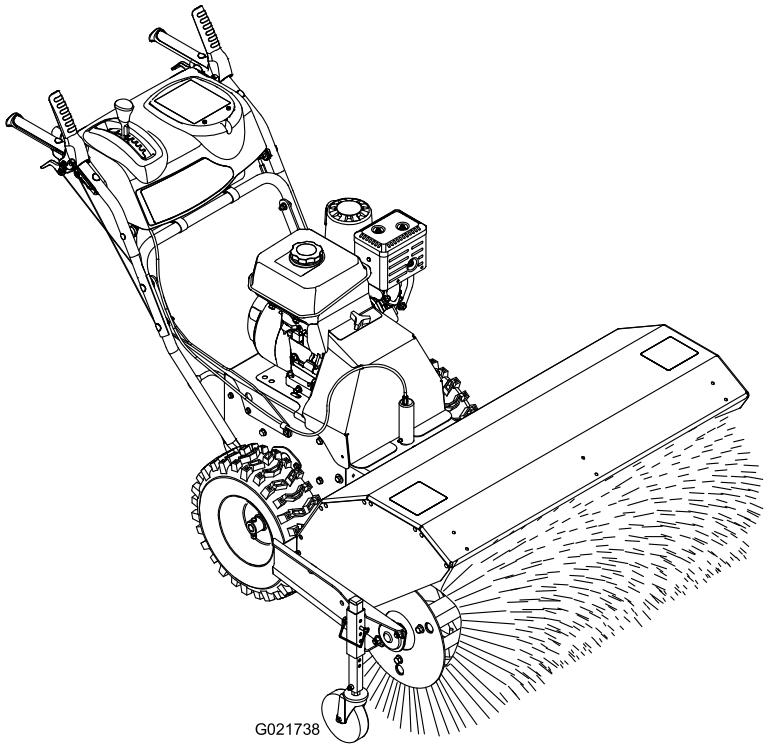

Register at www.Toro.com.
Original Instructions (EN)

3379-824 A

⚠ WARNING

CALIFORNIA
Proposition 65 Warning

This product contains a chemical or chemicals known to the State of California to cause cancer, birth defects, or reproductive harm.

The engine exhaust from this product contains chemicals known to the State of California to cause cancer, birth defects, or other reproductive harm.

Replacement Engine Owner's Manuals may be ordered through the engine manufacturer.

Introduction

Important: The engine in this product is not equipped with a spark arrester muffler. It is a violation of California Public Resource Code (CPRC) Section 4442 to use or operate this engine on any forest-covered, brush-covered, or grass-covered land as defined in CPRC 4126. Other states or federal areas may have similar laws.

To acquire a spark arrester for your unit, see your Engine Service Dealer.

This machine is intended to be used by residential homeowners or professional, hired operators. It is designed for removing snow, dust, and dirt from paved surfaces, such as driveways and sidewalks, and other surfaces for traffic on residential or commercial properties, as well as thatch from grass.

Read this information carefully to learn how to operate and maintain your machine properly and to avoid injury and machine damage. You are responsible for operating the machine properly and safely.

You may contact Toro directly at www.Toro.com for machine and accessory information, help finding a dealer, or to register your machine.

Whenever you need service, genuine Toro parts, or additional information, contact an Authorized Service Dealer or Toro Customer Service and have the model and serial numbers of your machine ready. Figure 1 identifies the location of the model and serial numbers on the machine. Write the numbers in the space provided.

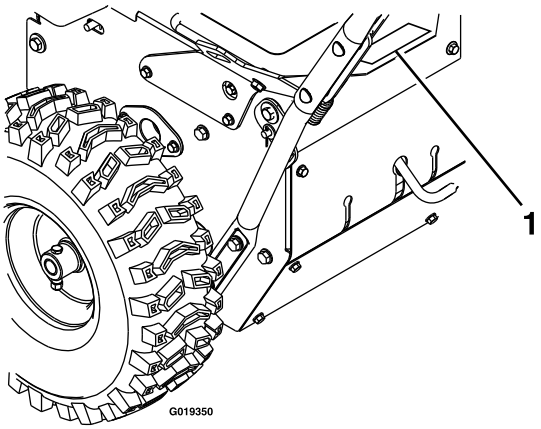

Figure 1

1. Model and serial number location

Model No. _____

Serial No. _____

This manual identifies potential hazards and has safety messages identified by the safety alert symbol (Figure 2), which signals a hazard that may cause serious injury or death if you do not follow the recommended precautions.



Figure 2

1. Safety alert symbol

This manual uses 2 words to highlight information. **Important** calls attention to special mechanical information and **Note** emphasizes general information worthy of special attention.

© 2013—The Toro® Company
8111 Lyndale Avenue South
Bloomington, MN 55420

Contact us at www.Toro.com.
Printed in the USA
All Rights Reserved

Contents

Introduction 2
Safety 4
- Training 4
- Preparation 4
- Operation 4
- Clearing a Clogged Broom 5
- Maintenance and Storage 5
- Slope Indicator 6
- Safety and Instructional Decals 7

Product Overview 9
- Controls 9
- Specifications 10
- Attachments/Accessories 10

Operation 11
- Fueling the Machine 11
- Operating the Engine 12
- Driving the Machine 13
- Operating the Broom 14
- Checking the Sweeping Path 15
- Adjusting the Broom Height 15
- Adjusting the Broom Side Angle 15
- Clearing a Clogged Broom 16
- Preventing Freeze-up 16
- Transporting the Machine 16

Maintenance 17
- Recommended Maintenance Schedule(s) 17
- Pre Maintenance Procedures 18
- Lubrication 18
- Engine Maintenance 18
- Fuel System Maintenance 21
- Drive System Maintenance 22
- Broom Maintenance 22
- Maintaining the Belts 24
- Maintaining the Chassis 26

Storage 27
- Preparing the Machine for Storage 27
- Removing the Machine from Storage 27

Troubleshooting 28

Safety

Read and understand the contents of this manual before the engine is ever started.

⚠This is the safety alert symbol. It is used to alert you to potential personal injury hazards. Obey all safety messages that follow this symbol to avoid possible injury or death.

Improperly using or maintaining this machine could result in injury or death. To reduce this potential, comply with the following safety instructions.

Training

- Read the operating and service instruction manual carefully. Be thoroughly familiar with the controls and the proper use of the machine. Know how to stop the machine and disengage the controls quickly.
- Never allow adults to operate the machine without proper instruction.

Preparation

⚠ CAUTION

The operation of any powered machine can result in foreign objects being thrown into the eyes.

Always wear safety glasses or eye shields during operation or while performing an adjustment or repair.

⚠ CAUTION

This machine produces sound levels in excess of 85 dBA at the operator's ear and can cause hearing loss through extended periods of exposure.

Wear hearing protection when operating this machine.

- Keep the area of operation clear of all persons, particularly small children, and pets.
- Thoroughly inspect the area where the machine is to be used and remove all doormats, sleds, boards, wires, and other foreign objects.
- Do not operate the machine without wearing appropriate personal protective equipment such as hearing protection, safety glasses or goggles, dust mask, and garments. Wear footwear which will improve traction on slippery surfaces.
- Handle fuel with care; it is highly flammable.
  - Use an approved fuel container.
  - Never add fuel to a running or hot engine.
  - Fill fuel tank outdoors with extreme care. Never fill fuel tank indoors.
  - Replace gasoline caps securely and wipe up spilled fuel.
- Let engine and machine adjust to outdoor temperatures before starting to clear snow.

Operation

- Never allow children to operate the machine.
- Do not put hands or feet near or under rotating parts. Keep clear of the discharge opening at all times.
- Never direct discharge at bystanders or allow anyone in front of the machine.
- Take all possible precautions when leaving the machine unattended. Release the broom-drive lever, traction-drive lever, stop the engine and remove the key.
- Always be sure of your footing, and keep a firm hold on the handles. Walk; never run.
- Never operate the machine without good visibility or light.
- Exercise caution to avoid slipping or falling, especially when operating the machine in the reverse travel direction.
- Stop the engine whenever you leave the operating position, before unclogging the broom housing, and when making any repairs, adjustments, or inspections.
- Exercise extreme caution when operating on or crossing gravel drives, walks, or roads. Stay alert for hidden hazards or traffic.
- Never operate the machine at high transport speeds on slippery surfaces. Use care when reversing.
- Do not clear snow, dirt, or thatch across the face of slopes. Exercise extreme caution when changing direction on slopes. Do not attempt to clear steep slopes.
- Never operate the machine near glass enclosures, automobiles, window wells, drop-offs, etc. without proper adjustment of the snow discharge angle. Keep children and pets away.
- Do not overload the machine capacity by attempting to clear snow, dirt, or thatch at too fast a rate.
- Do not run the engine indoors, except when starting it and for moving the machine in or out of the building. Open the outside doors; exhaust fumes are dangerous.
- When cleaning, repairing, or inspecting, make certain the rotary broom and all moving parts have stopped. Disconnect the spark-plug wire, and keep the wire away from the plug to prevent accidental starting.
- Disengage power to the rotary broom when machine is transported or not in use.
- After striking a foreign object, stop the engine, remove the wire from the spark-plug, thoroughly inspect the machine for any damage, and repair the damage before restarting and operating the machine.
- If the machine should start to vibrate abnormally, stop the engine and check immediately for the cause. Vibration is generally a warning of trouble.

- Never operate the machine without proper guards, plates, or other safety protective devices in place.
- Use only attachments and accessories approved by the manufacturer of machine (such as wheel weights, counterweights, cabs, etc.).

Clearing a Clogged Broom

⚠ WARNING

The rotating broom could cause serious injury.

Always use caution when cleaning the broom.

To clear the broom:

- Park the machine on level ground. Stop engine, wait for all moving parts to stop, and remove the spark plug wire(s).
- Sharp objects can become entangled in bristles. Use gloves and caution when cleaning out the broom of foreign objects; not bare hands.

Maintenance and Storage

- Never attempt to make any adjustments while the engine is running (except where specifically recommended by the manufacturer).
- Check all fasteners at frequent intervals for proper tightness to be sure that the machine is in safe working condition.
- Never store the machine with fuel in the fuel tank inside a building where ignition sources are present, such as hot water and space heaters, clothes dryers, etc. Allow the engine to cool before storing in any enclosure.
- Always refer to the instructions in the *Operator's Manual* for important details if the machine is to be stored for an extended period.
- Maintain or replace safety and instruction labels, as necessary.
- When operating in snow conditions, run the machine a few minutes after throwing snow to prevent freeze-up of the broom and housing.

Slope Indicator

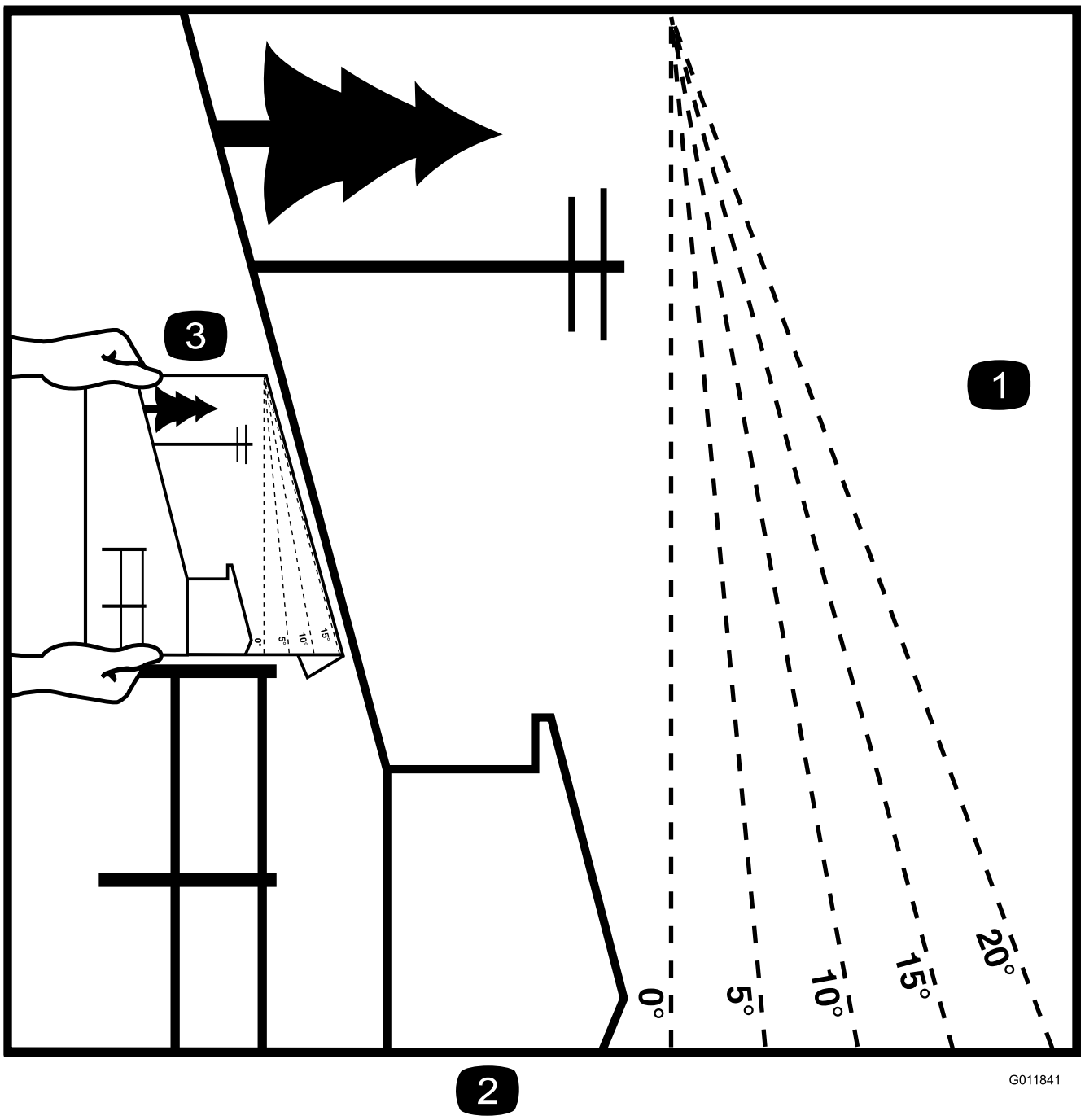

Figure 3

1. The maximum slope you can safely operate the machine on is **10°**. Use the slope indicator to determine the degree of slope of hills before operating. **Do not operate this machine on a slope greater than 10°.** Fold along the appropriate line to match the recommended slope.
2. Align this edge with a vertical surface, a tree, building, fence pole, etc.
3. Example of how to compare slope with folded edge.

Safety and Instructional Decals

Important: **Safety and instruction decals are located near areas of potential danger. Replace damaged decals.**

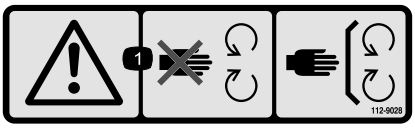

112-9028

1. Warning—stay away from moving parts; keep all guards in place.

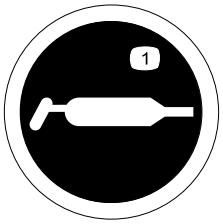

115-2903

1. Grease

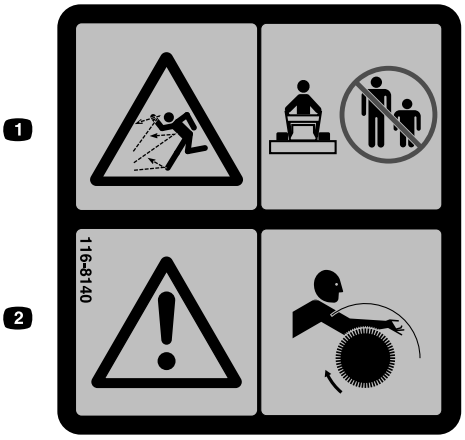

116-8140

1. Thrown object hazard-Do Not operate when people and pets are in the area.
2. Warning-Entanglement hazard-stay clear of rotating broom.

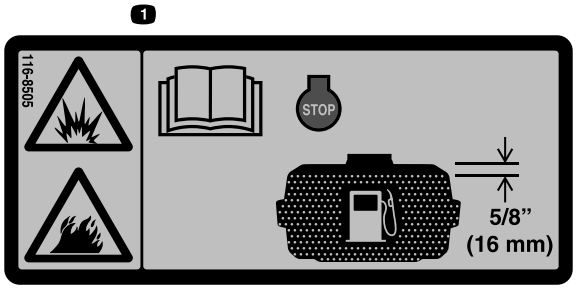

116-8505

1. Explosion/Fire hazard–Read the Operator's Manual. Stop engine before filling fuel tank. Leave 5/8 inch (16mm) at top of tank for fuel expansion-Do Not overfill tank.



117–2718

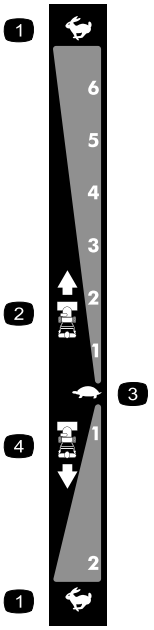

106-4525

Reorder part no. 112-6633

1. Fast
2. Forward speeds
3. Slow
4. Reverse speeds

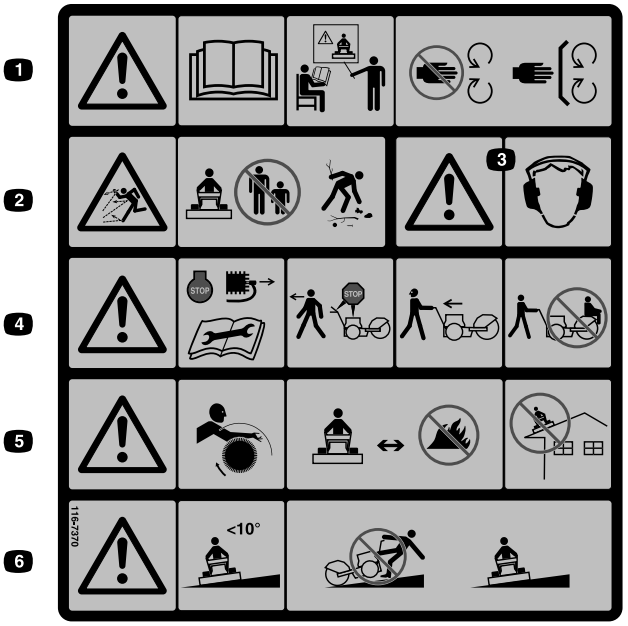

116-7370

1. Warning-Read the Operator's Manual. Do Not operate this machine unless you are trained. Stay away from moving parts; keep all guards in place.
2. Thrown object hazard-Do Not operate when people and pets are in the area; pick up objects that could be thrown by broom.
3. Warning-Wear hearing protection.
4. Warning-Stop engine and remove spark plug before adjusting, servicing, or cleaning machine and attachments. Before leaving the operator's position, disengage broom, traction drive, and stop engine. Look behind and to the side before changing directions. Do Not carry passengers.
5. Warning-Entanglement hazard-stay clear of rotating broom. Broom bristles will melt or burn-keep away from extreme heat or flame. Do Not operate on any roof or other elevated surface.
6. Warning-Do Not operate on slopes greater than 10 degrees. Use extreme caution when operating on slopes; operate across slopes not up and down.



126–0017

1. Engage the left turn lever to turn left.
2. Engage the traction control lever to activate the traction drive.
3. Engage the broom angle lever to adjust the broom.
4. Engage the PTO lever to activate the PTO.
5. Engage the right turn lever to turn right.

Product Overview

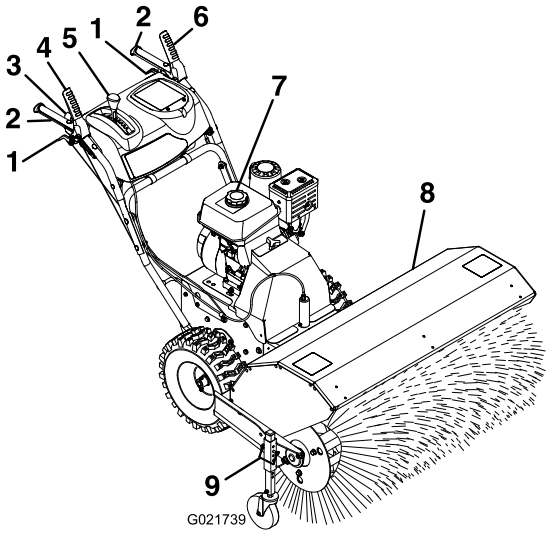

Figure 4

1. Wheel-clutch lever
2. Handle
3. Broom-angle lever
4. Broom-drive lever
5. Speed-selector lever
6. Traction-drive lever
7. Fuel cap
8. Broom
9. Broom-height-adjustment pin

Controls

Determine the left and right sides of the machine from the normal operating position.

Choke Control

The choke control is the top lever located on the rear left side of the engine above the fuel shut-off valve (Figure 5).

The choke is used to aid in starting a cold engine. Move the lever left to the On position for a cold start. Do not run a warm engine with the choke in the On position.

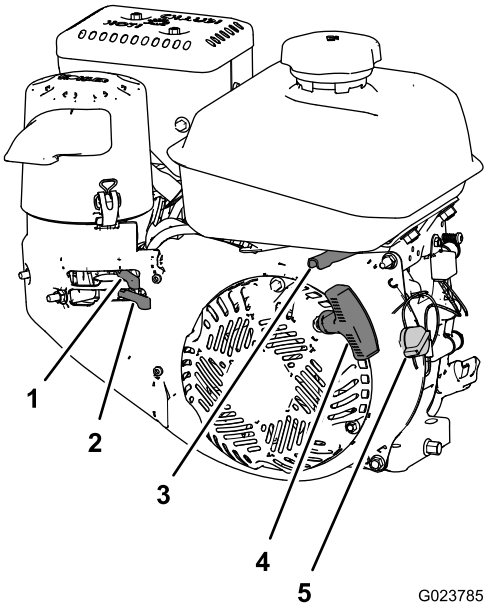

Figure 5

1. Choke control
2. Fuel-shutoff valve
3. Throttle control
4. Engine-recoil handle
5. Engine On/Off switch

Fuel-Shutoff Valve

The fuel-shutoff valve is the lower lever located on the rear, left side of the engine below the choke. The fuel-shutoff valve shuts off the flow of fuel when the machine will not be used for a few days, when parking inside a building, and during transport to and from the job site (Figure 5).

Move the lever to the left to shut off the fuel. Move the lever to the right to turn on the fuel.

Throttle Control

The throttle control is located on the rear, right side of the engine and below the fuel tank (Figure 5).

The throttle is used to control engine speed. Moving the throttle control to the left will increase engine speed, and moving it right will decrease engine speed.

Engine On/Off Switch

Located on the right hand side of the engine (Figure 5).

Rotate the switch clockwise to the On position before starting the engine. Rotate the switch counterclockwise to the Off position to stop the engine.

Wheel-clutch Levers

The wheel-clutch levers are located below the right and left handles.

The wheel clutch levers allow the drive to momentarily disengage to 1 or both wheels with the traction-drive lever

squeezed. This allows for easier turning and maneuvering the machine (Figure 6).

Note: Squeezing both wheel clutch levers simultaneously disengages the drive to both wheels (free-wheeling). This enables you to manually move the machine backward without stopping to shift it into a reverse gear. It also allows you to maneuver and transport the machine more easily when the engine is not running.

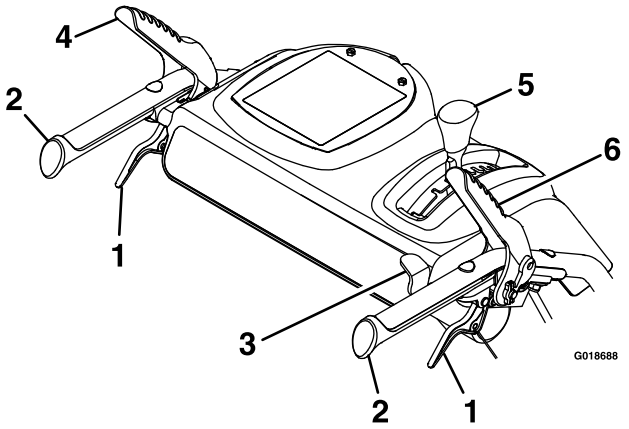

Figure 6

1. Wheel clutch lever
2. Handle
3. Broom angle lever
4. Traction drive lever
5. Speed selector lever
6. Broom drive lever

Broom-drive Lever

The broom-drive lever is located above the right handle (Figure 6).

To engage the broom, squeeze the lever to the handle. To disengage the broom, release the right lever.

Traction-drive Lever

The traction-drive lever is located above the left handle (Figure 6).

The traction-drive lever controls the forward and reverse motion of the machine. To engage the traction drive, squeeze the lever to the handle.

Note: Holding down the traction-drive lever against the handle engages the traction drive to both wheels.

Speed-selector Lever

The speed-selection lever is located on the main console panel (Figure 6).

The speed selector has 6 forward and 2 reverse settings. To change speeds, release the traction-drive lever, and shift the speed-selector lever to the desired setting. The lever locks in a notch at each speed setting.

Broom-angle Lever

The broom-angle lever is located at the right handle (Figure 6).

The broom-angle lever controls the angle lock. The broom angle can be locked into 3 positions: straight ahead, or angled to the left or right 19°.

Specifications

Width	118 cm (46.5 inch)
Length	185.5 cm (73 inch)
Height	105.5 cm (41.5 inch)
Weight	146.5 kg (323 lb)
Engine speed (no load)	Full speed: 3600 ±100 rpm

Attachments/Accessories

A selection of Toro approved attachments and accessories is available for use with the machine to enhance and expand its capabilities. Contact your Authorized Service Dealer or Distributor or go to www.Toro.com for a list of all approved attachments and accessories.

Operation

Fueling the Machine

- **Fuel tank capacity:** 4.1 L (1.0 US gal)
- **Recommended Fuel:**
  - For best results, use only clean, fresh (less than 30 days old), unleaded gasoline with an octane rating of 87 or higher ((R+M)/2 rating method).
  - **Ethanol**: Gasoline with up to 10% ethanol (gasohol) or 15% MTBE (methyl tertiary butyl ether) by volume is acceptable. Ethanol and MTBE are not the same. Gasoline with 15% ethanol (E15) by volume is not approved for use. **Never use gasoline that contains more than 10% ethanol by volume**, such as E15 (contains 15% ethanol), E20 (contains 20% ethanol), or E85 (contains up to 85% ethanol). Using unapproved gasoline may cause performance problems and/or engine damage which may not be covered under warranty.
  - **Do not** use gasoline containing methanol.
  - **Do not** store fuel either in the fuel tank or fuel containers over the winter unless a fuel stabilizer is used.
  - **Do not** add oil to gasoline.

Important: Do not use fuel additives other than a fuel stabilizer/conditioner. Do not use fuel stabilizers with an alcohol base such as ethanol, methanol, or isopropanol.

⚠ DANGER

In certain conditions, gasoline is extremely flammable and highly explosive. A fire or explosion from gasoline can burn you and others and can damage property.

- **Fill the fuel tank outdoors, in an open area, and when the engine is cold. Wipe up any gasoline that spills.**
- **Do not fill the fuel tank completely full. Add gasoline to the fuel tank until the level is 6 to 13 mm (1/4 to 1/2 in) below the bottom of the filler neck. This empty space in the tank allows the gasoline to expand.**
- **Never smoke when handling gasoline, and stay away from an open flame or where a spark may ignite the gasoline fumes.**
- **Store gasoline in an approved fuel container and keep it out of the reach of children.**
- **Never buy more than a 30-day supply of gasoline.**

⚠ DANGER

When fueling, under certain circumstances, a static charge can develop, igniting the gasoline. A fire or explosion from gasoline can burn you and others and damage property.

- **Always place gasoline containers on the ground and away from your vehicle before filling.**
- **Do not fill gasoline containers inside a vehicle or on a truck or trailer bed because interior carpets or plastic truck bed liners may insulate the container and slow the loss of any static charge.**
- **When practical, remove gasoline-powered equipment from the truck or trailer and refuel the equipment with its wheels on the round.**
- **If this is not possible, then refuel such equipment on a truck or trailer from a portable container, not from a gasoline dispenser nozzle.**
- **If you must use a gasoline dispenser nozzle, keep the nozzle in contact with the rim of the fuel tank or container opening at all times until fueling is complete.**

Adding Fuel to the Fuel Tank

1. Clean around the fuel-tank cap (Figure 7).

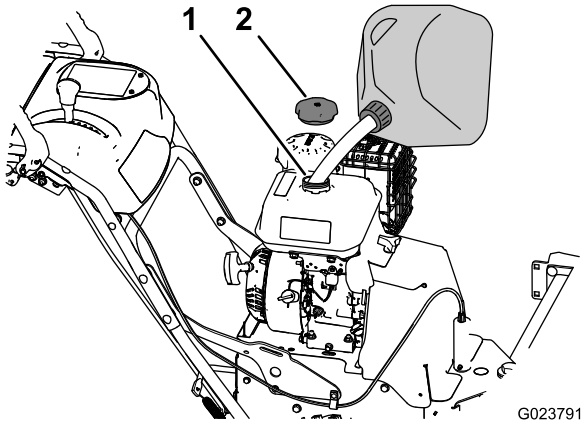

Figure 7

1. Filler neck
2. Fuel-tank cap

2. Remove the cap from the fuel tank (Figure 7).
3. Fill the fuel tank with unleaded gasoline to within 6 to 13 mm (1/4 to 1/2 inch) from the top of the tank. **Do not fill into the filler neck.**

   Important: Do not fill the tank more than 6 mm (1/4 inch) from the top of the tank because the gasoline must have room to expand.
4. Install the fuel-tank cap and wipe up any spilled gasoline (Figure 7).

Operating the Engine

Positioning the Air-cleaner Cover for Cold or Warm Air Temperature

Important: Running engine with air-cleaner cover positioned for cold weather operation in normal conditions can damage engine.

The air-cleaner cover has 2 position: the cold- or normal-ambient air positions:

Adjust the air-cleaner cover as follows:

- When operating in a **cold ambient air condition** (cold air temperature and humidity)—position the air-cleaner cover with snowflake decal facing out (Figure 8).

  Note: Use this position if your machine exhibits carburetor icing. Symptoms include the engine runs rough at idle or low speed, and it discharges black or white smoke in the exhaust.

- When operating in a **normal ambient air condition**—position the air-cleaner cover with sun decal facing out (Figure 8).

  Note: Use this position if your machine is not exhibiting carburetor icing.

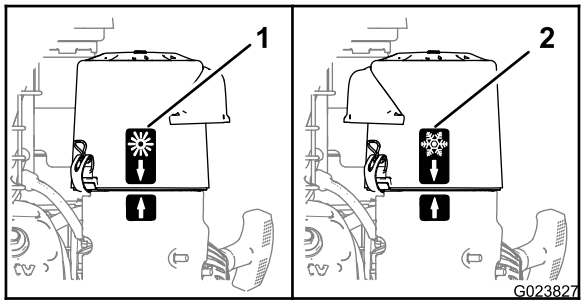

Figure 8

1. Normal ambient air position
2. Cold ambient air position

Open the Fuel-shutoff Valve

Move the fuel-shutoff valve located below the choke, to the right to turn on fuel (Figure 9).

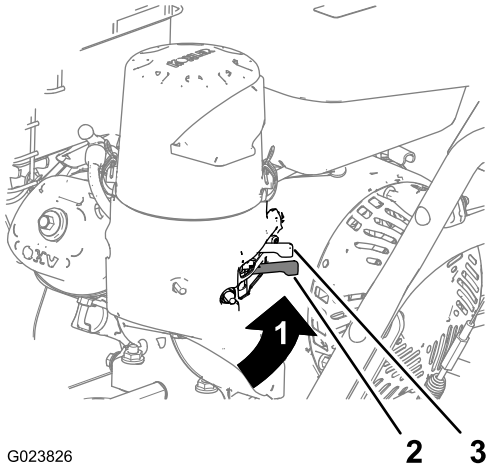

Figure 9

1. Fuel On position
2. Fuel-shutoff valve
3. Choke

Starting the Engine

1. On the right side of the engine, rotate the engine On/Off switch clockwise to the On position (Figure 10).

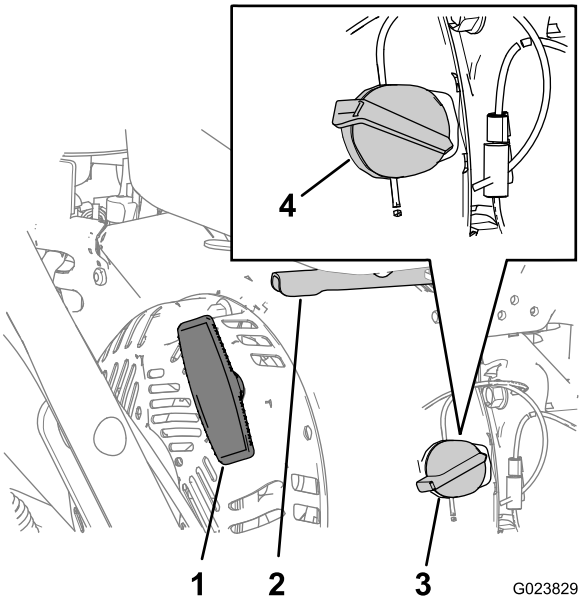

Figure 10

1. Engine-recoil handle
2. Throttle
3. Engine switch (Off position)
4. Engine switch (On position)

2. On the rear, left side of the engine, move the choke lever to the left to the On position. On a warm engine, leave the choke in the Off position (Figure 9).
3. Place the throttle midway between the Slow and Fast positions located on rear, right side of the engine (Figure 10).

4. Slowly pull the engine-recoil handle until you feel resistance and then stop. Allow the recoil handle to return and then sharply pull it straight out (Figure 10).

   Note: Allow the rope to return slowly.

5. Allow the engine to warm up for several minutes, then move the choke toward the Off position (Figure 9).

Stopping the Engine

1. Release the broom-drive lever and the traction-drive lever.
2. Place the throttle midway between the Slow and Fast positions (Figure 10).
3. Allow the engine to run for a minimum of 15 seconds, then turn the engine On/Off switch to the Off position to stop the engine (Figure 10).
4. Wait for all moving parts to stop before leaving the operating position.
5. Close the fuel-shutoff valve by moving it to the left when the machine will not be in use for a few days, when transporting, or when the unit is parked inside a building (Figure 9).

Driving the Machine

⚠ CAUTION

If the traction drive is not properly adjusted, the machine may move in the direction opposite of what you intended, causing injury and/or property damage.

Carefully check the traction drive and adjust it properly, if necessary.

Important: If the machine moves when the traction lever is in the released position, check the traction cable; refer to Checking the Traction Cable (page 22) and Adjusting the Traction Cable (page 22) or contact your authorized Toro dealer.

Driving Forward

1. Place the speed selector lever to the desired forward position, making sure it locks in the notch (Figure 11).

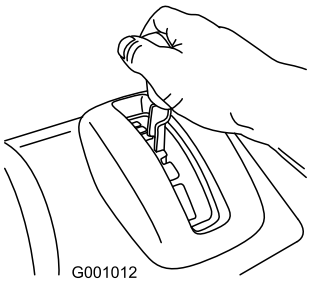

Figure 11

Note: If the ground speed is too fast, debris or snow will pile up in front of the broom causing the broom to bulldoze instead of sweep. This can damage the bristles and the drive line.

2. Slowly squeeze the left hand traction drive lever to the handle (Figure 12).

   Note: Holding down the traction drive lever against the handle engages the traction drive to both wheels.

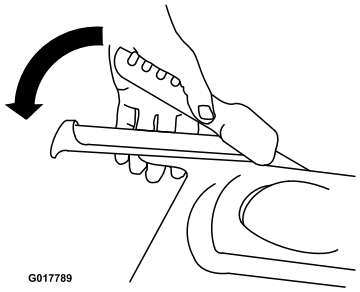

Figure 12

3. To stop the traction drive, release the traction drive lever.
4. To move forward, engage the traction drive and slowly squeeze the left hand traction lever to the handle (Figure 13). Momentarily squeezing and releasing the left or right wheel clutch lever allows for steering adjustments to keep the machine going in a straight line, especially in deep snow.

   To turn right, lift up on the right wheel clutch lever and squeeze it toward the handle. This disengages the drive to the right wheel while the left wheel continues driving, and the machine turns to the right.

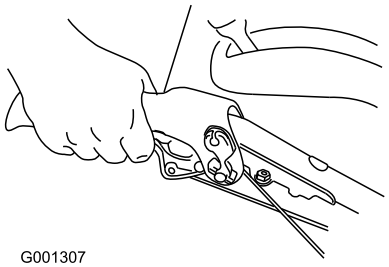

Figure 13

Note: Similarly, squeezing the left wheel clutch lever turns the machine to the left.

When you complete the turn, release the wheel clutch lever. The drive engages both wheels (Figure 14).

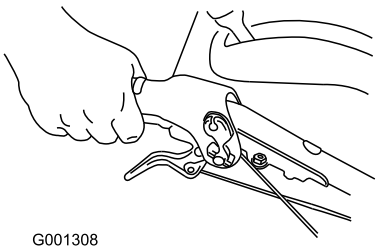

Figure 14

5. To stop the traction drive, release the traction drive lever.

Driving the Machine Rearward

1. Place the speed selector lever into the desired reverse-speed range, making sure that the speed selector locks in the notch.
2. To move rearward, engage the traction drive and slowly squeeze the left traction lever to the handle. Momentarily squeezing and releasing the left or right wheel-clutch lever allows for steering adjustments to keep the machine going in a straight line.

   To turn right, squeeze the right wheel-clutch lever toward the handle. This disengages the drive to the right wheel while the left wheel continues driving, and the machine turns to the right.

   Note: Similarly, squeezing the left wheel-clutch lever turns the machine to the left.

Squeezing both wheel clutch levers simultaneously disengages the drive to both wheels. This enables you to move the machine rearward without stopping to shift it into a reverse gear. It also allows you to maneuver and transport the machine more easily when the engine is not running.

Operating the Broom

⚠ DANGER

When the machine is in operation, contact with rotating or moving parts will severely injure hands and feet.

- **Before adjusting, cleaning, inspecting, troubleshooting, or repairing the machine, stop the engine and wait for all moving parts to stop. Disconnect the wire from the spark plug and keep it away from the plug to prevent someone from accidentally starting the engine.**
- **Stay behind the handles and away from the broom while operating the machine.**
- **Keep face, hands, feet, and any other part of your body or clothing away from concealed, moving, or rotating parts.**

⚠ WARNING

Contact with a rotating broom can result in serious personal injury or death to the operator or bystanders.

- **To remove an obstruction from the broom; refer to Clearing a Clogged Broom (page 16).**
- **Do not operate the machine if the broom drive lever is not functioning properly. Contact your authorized Toro dealer.**

⚠ WARNING

The rotating broom can throw stones and other foreign objects, causing serious personal injury to the operator or to bystanders.

- **Keep the working area clear and free of all objects that the broom could pick up and throw.**
- **Keep all children and pets away from the area of operation.**

⚠ CAUTION

When the broom is engaged, it may drive the unit in the reverse direction. If the broom height is adjusted too low, the machine may move more forcefully in the reverse direction, causing injury and/or property damage.

Carefully check the broom height and adjust it properly or contact your authorized Toro dealer.

1. Set the engine throttle to the Fast position.
2. Place the speed selector lever into the desired position and slowly squeeze the left hand traction drive lever.

   Important: Make sure the traction drive is engaged before operating the broom; otherwise the broom may drive the unit in the reverse direction.
3. To engage the broom, slowly squeeze the right hand broom lever to the handle (Figure 15).

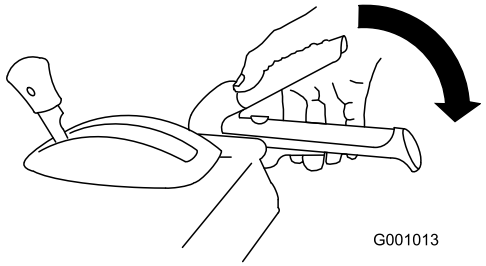

Figure 15

- If the engine slows down under a load or the wheels slip, shift the machine into a lower gear.
- If the front of the machine rides up, shift the machine into a lower gear. If the front continues to ride up, lift up on the handles.

4. To stop the broom, release the right lever.

Checking the Sweeping Path

A broom sweeps with the tips of its bristles. When you apply too much downward pressure, the broom no longer usies its tips; the broom is now working with the sides of the bristles. This limits the flicking action of the bristles and sweeping effectiveness, decreasing the service life of the broom.

1. Drive to a flat, dusty area and stop the machine.
2. With the engine running move the throttle midway between Slow and Fast.
3. Engage the broom and allow the broom to sweep for approximately 30 seconds.
4. Disengage the broom and stop the engine.
5. Wait for all moving parts to stop before leaving the operating position.
6. Turn the engine On/Off switch to the Off position.
7. Make sure the area swept equals the length of the broom and a maximum width of 51 to 102 mm (2 to 4 inches).

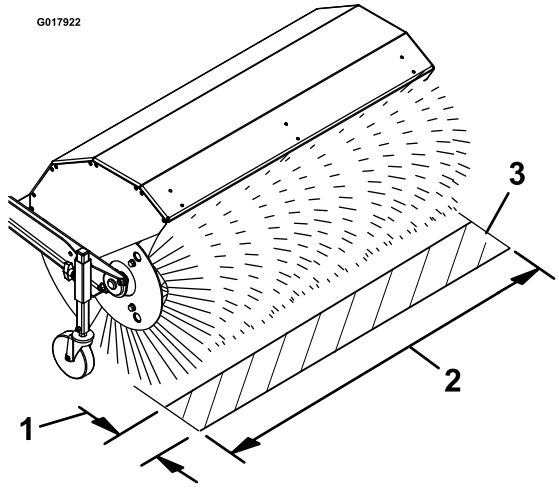

Figure 16

1. 51 to 102 mm (2 to 4 inches) maximum width
2. Length of broom
3. Swept area

8. Adjust the broom height if necessary.

Adjusting the Broom Height

1. Drive to a flat, dusty area and stop the machine.
2. Disengage the broom and stop the engine.
3. Wait for all moving parts to stop before leaving the operating position.
4. Turn the engine On/Off switch to the Off position.
5. To adjust the broom height, remove and retain the pin from the adjuster sleeve and wheel tube of the caster (Figure 17).

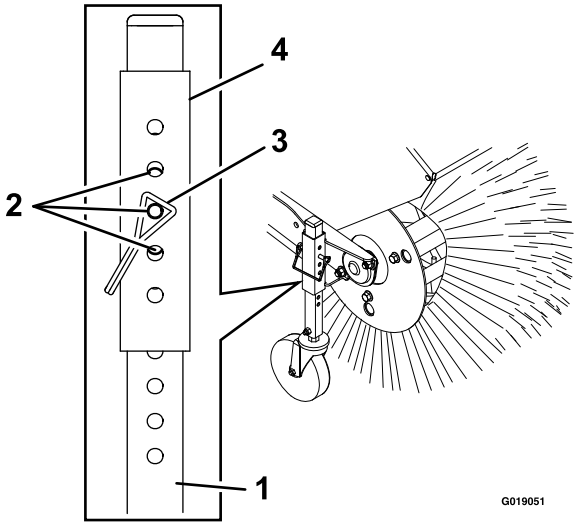

Figure 17

1. Caster-wheel tube
2. Positions to achieve 3 mm (1/8 inch) increments
3. Pin
4. Adjuster sleeve

6. Raise or lower the caster wheel tube to achieve the sweep area as stated in Checking the Sweeping Path (page 15).

   Note: Select any hole combination that is in alignment to place and latch the retaining pin; match the same position on the other side.

7. For fine tuning adjustments, slide the adjuster sleeve 1 pin hole up or down on the caster wheel tube to adjust the broom height in 3 mm (1/8 inch) increments (Figure 17). Repeat steps 5 through 7 for the other caster wheel.
   - To raise the broom in 3 mm (1/8 inch) increments, slightly raise the adjuster sleeve and insert the pin into the next pin hole below the current hole used.
   - To lower the broom in 3 mm (1/8 inch) increments, slightly lower the adjuster sleeve and insert the pin into the next pin hole above the current hole used.
8. When you attain the desired height, secure the pin on each caster wheel, and check the sweeping area.

Adjusting the Broom Side Angle

1. Disengage the broom and stop the engine.
2. Wait for all moving parts to stop.

3. Push the lever down with the thumb of your right hand (Figure 6).
4. Squeeze the left wheel-clutch lever to the handle and push the broom housing to the desired angle.

   Note: The broom can rotate 19° to the right or left, or straight ahead.
5. Once the broom is positioned, release the broom angle lever.
6. Release the left wheel-clutch lever and make sure that the broom is locked into place.

Clearing a Clogged Broom

⚠ WARNING

The rotating broom could cause serious injury.

Shut off the machine and allow all rotating parts to stop before cleaning the broom.

- If the broom becomes clogged, stay in the operating position and release the left traction-drive lever. While engaging the broom, push down on the handles to raise the front of the machine a few centimeters (inches) off the pavement. Then lift the handles quickly to bump the front of the machine on the pavement. Repeat if necessary.
- If you cannot unclog the broom by bumping the front of the machine:
  - Park the machine on level ground. Stop the engine, wait for all moving parts to stop, and disconnect the spark plug wire.
  - Sharp objects can become entangled in bristles. Use gloves and caution when removing foreign objects from the broom; do not use your hands.

Preventing Freeze-up

- In snowy and cold conditions, some controls and moving parts may freeze. Do not use excessive force when trying to operate frozen controls. If you have difficulty operating any control or part, start the engine and let it run for a few minutes.
- After using the machine, let the engine run for a few minutes to prevent moving parts from freezing. Engage the broom to clear any remaining snow from inside the housing. Stop the engine and wait for all moving parts to stop, and disconnect the spark-plug wire. Remove all ice, snow, or other debris from the machine.
- Connect the spark-plug wire. With the engine switch in the Off position, pull the recoil-starter handle several times to prevent the recoil starter from freezing up.

Transporting the Machine

⚠ WARNING

Using ramps that are not strong enough or properly supported to load the machine onto the transport vehicle could be dangerous. The ramps could collapse, causing the machine to fall, which could cause injury.

- **Use proper ramps that are secured to the truck or trailer.**
- **Keep feet and legs out from under the machine when loading and unloading.**

Preparing to Transport the Machine

Perform the following before transporting the machine:

- Be sure that the fuel-shutoff valve is closed.
- Use a heavy-duty trailer to transport the machine. Place the machine in either a forward or reverse gear, then block the wheels.
- Securely fasten the machine to the trailer with straps, chains, cables, or ropes.
- Be sure that the trailer has all the necessary lighting and marking as required by law.

Maintenance

Note: Determine the left and right sides of the machine from the normal operating position.

Recommended Maintenance Schedule(s)

Maintenance Service Interval	Maintenance Procedure
After the first 2 hours	• Check the traction cable. • Check the broom cable.
After the first 5 hours	• Change the engine oil.
Before each use or daily	• Check the engine oil level. • Check the broom-shaft shear pin. • Check for loose hardware.
Every 50 hours	• Clean the foam pre-cleaner (more frequently in dusty conditions). • Check the tire pressure. • Check the condition of the belts.
Every 100 hours	• Lubricate the broom-angle-lock pin. • Change the engine oil (more frequently in severe conditions). • Check the spark plug.
Every 200 hours	• Replace the foam pre-cleaner.
Every 300 hours	• Replace the paper air filter (more frequently in dusty conditions).
Yearly	• Lubricate the hex shaft. • Check the traction cable. • Check the broom cable.
Yearly or before storage	• Check the air pressure in the drive tires and inflate them to 116 to 137 kPa (17 to 20 psi). • Drain the gasoline and run the engine to dry out the fuel tank and the carburetor at the end of the season. • Have an authorized service dealer inspect and replace the traction-drive belt, if necessary.

Important: **You can find more information about maintaining and servicing your machine at www.Toro.com.**

Important: **Refer to your engine operator's manual for additional maintenance procedures. For engine adjustments, repairs, or warranty service not covered in this manual, contact the authorized engine service dealer.**

Pre Maintenance Procedures

1. Move the machine to a level surface.
2. Shut off the engine and allow it to cool.
3. Disconnect the spark-plug wire from the spark plug (Figure 18).

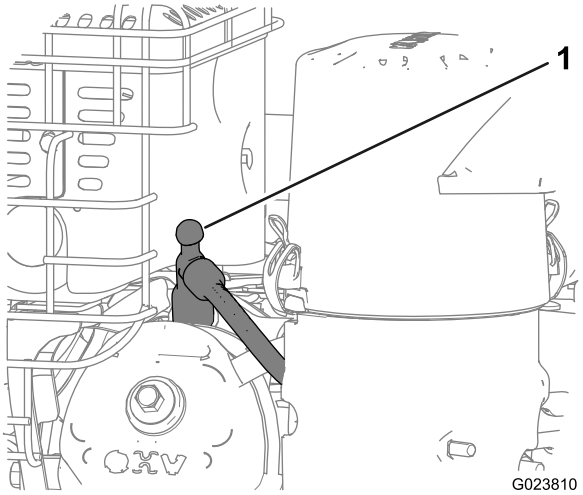

Figure 18

1. Spark-plug wire

Lubrication

Lubricating the Broom-angle-lock Pin and the Hex Shaft

Service Interval: Every 100 hours

Yearly

1. Lubricate the broom-angle-lock pin fitting with NGLI grade #2 multi-purpose grease.

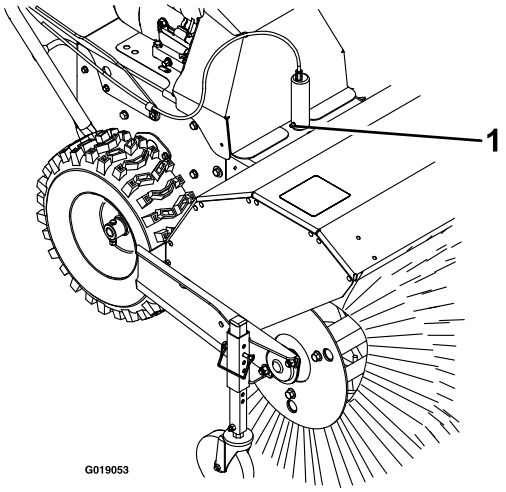

Figure 19

1. Broom-angle-lock pin

2. Remove the belt cover and the engine shield.
3. Move the speed-selector lever to the R2 position.
4. Dip a long, clean, small-tipped paint brush in automotive engine oil and lightly lubricate the hex shaft (Figure 20).

Important: Do not get oil on the rubber wheel or the aluminum friction-drive plate as the traction drive will slip (Figure 20).

Note: Rock the machine forward and rearward to rotate the hex shaft.

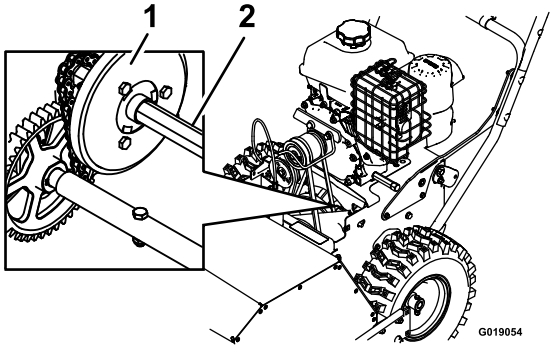

Figure 20

1. Aluminum friction-drive plate
2. Hex shaft

5. Move the speed selector lever to position 6.
6. Lubricate the other end of the hex shaft.
7. Move the speed selector lever forward and rearward a few times.
8. Install the belt cover and the engine shield.

Engine Maintenance

Servicing the Air Cleaner

Service Interval: Every 50 hours—Clean the foam pre-cleaner (more frequently in dusty conditions).

Every 200 hours—Replace the foam pre-cleaner.

Every 300 hours—Replace the paper air filter (more frequently in dusty conditions).

Important: Do not operate the engine without the air filter assembly; extreme engine damage may occur.

1. Release the latches on the cover for the air cleaner.
2. Remove the cover and clean it thoroughly (Figure 21).

Note: Be careful to prevent dirt and debris from falling into the base.

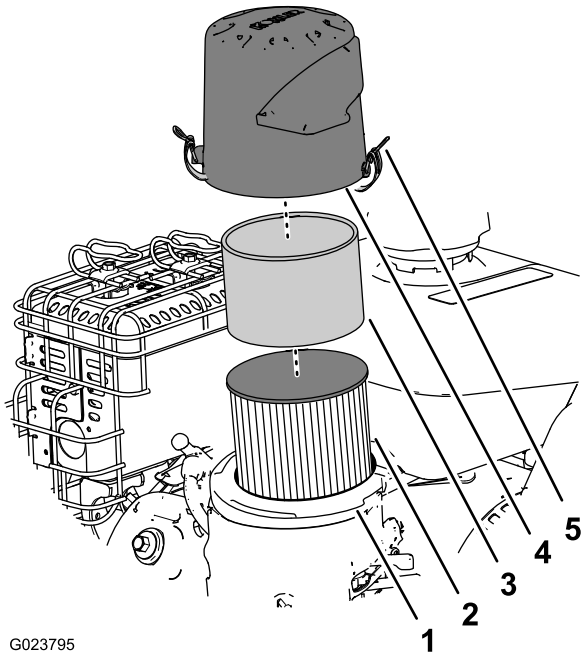

Figure 21

1. Air-filter base
2. Paper air filter
3. Foam pre-cleaner
4. Cover
5. Latch on the air-cleaner cover (2)

3. Remove the foam pre-cleaner, wash it with a mild detergent and water, and then blot it dry (Figure 21).
4. Remove and inspect the paper air filter (Figure 21); discard it if it is excessively dirty.

   Important: Do not try to clean a paper filter.
5. Wipe dirt away from the base and the cover with a moist rag.

   Note: Be careful to prevent dirt and debris from entering the air duct leading to the carburetor.
6. Install the foam pre-cleaner onto the paper air filter (Figure 21).

   Note: Use a new paper air filter if you discarded the old one.
7. Install the air filter assembly to the air-filter base (Figure 21).
8. Align the arrow decal on the air-cleaner cover and the arrow decal on the base (Figure 22).

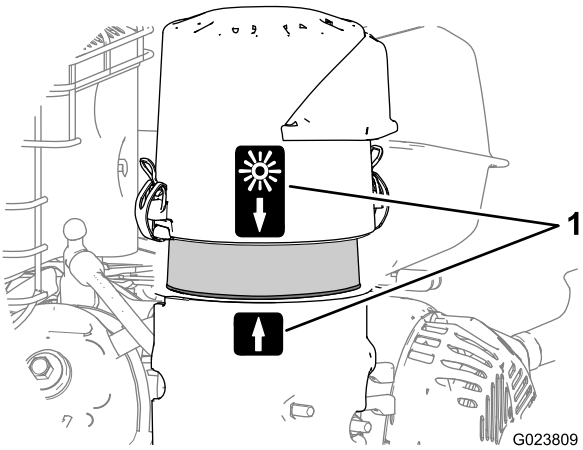

Figure 22

1. Alignment-arrow decal (normal ambient air position shown)

9. Secure the air-filter cover to the base with the latches.

Checking the Engine-oil Level

Service Interval: Before each use or daily

Engine Oil Type: Toro 4–Cycle Premium Engine Oil

Use high-quality detergent oils (including synthetic) of API (American Petroleum Institute) service class SJ or higher. Select the viscosity based on the air temperature at time of operation as shown in the table below.

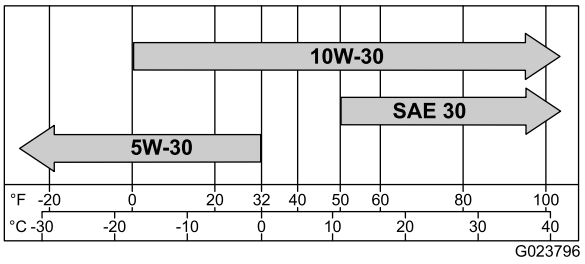

Figure 23

Check the oil level when the engine is cold.

1. Clean the area around the dipstick.
2. Remove the dipstick and read the oil level (Figure 24).

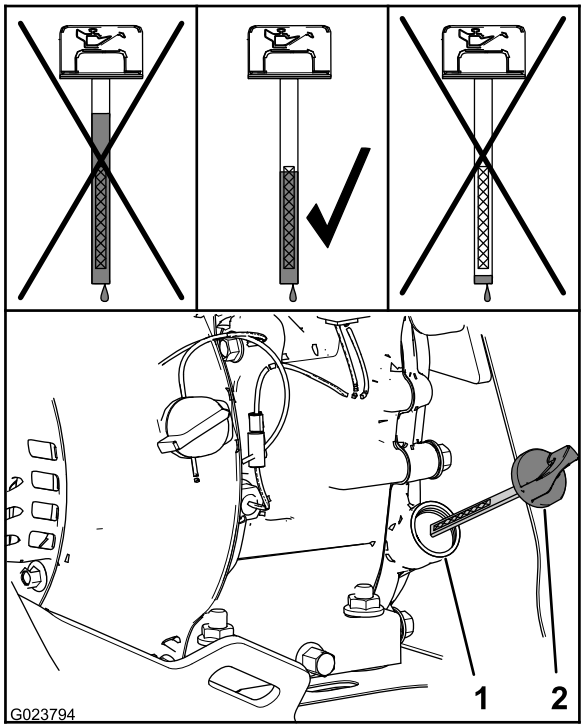

Figure 24

1. Filler neck
2. Dipstick

3. Remove the dipstick and wipe off the oil with a clean rag.
4. Insert the dipstick into the filler neck, rest it on the oil filler neck, and turn it counterclockwise until the cap drops down to lowest point of the thread leads.

   Note: Do not thread the cap onto the tube.
5. Remove dipstick and check oil level.

   Note: Do not operate the engine with the oil level below the Add mark or above the Full mark on the dipstick.

   Note: The oil level should be at top of the indicator on the dipstick (Figure 24).

   - If the oil level is low, perform the following:
     A. Pour the specified oil into the filler neck (Figure 24).

        Note: Do not overfill the engine with oil.

     B. Repeat steps 3 through 5.
   - If the oil level is high, preform the following:
     A. Remove the cap from the drain fitting.
     B. Drain the oil until the oil level is at the top of the indicator on dipstick; refer to steps 1 of Changing the Engine Oil (page 20).
     C. Install the cap onto the drain fitting; refer to step 2 of Changing the Engine Oil (page 20).
6. Insert the dipstick into the filler neck and tighten the dipstick by hand.

Changing the Engine Oil

Service Interval: After the first 5 hours

Every 100 hours (more frequently in severe conditions).

Oil capacity: 0.60 L (0.63 qt)

Note: Drain the engine oil while the engine is warm.

1. Place a pan under drain fitting and remove the oil-drain cap (Figure 25).

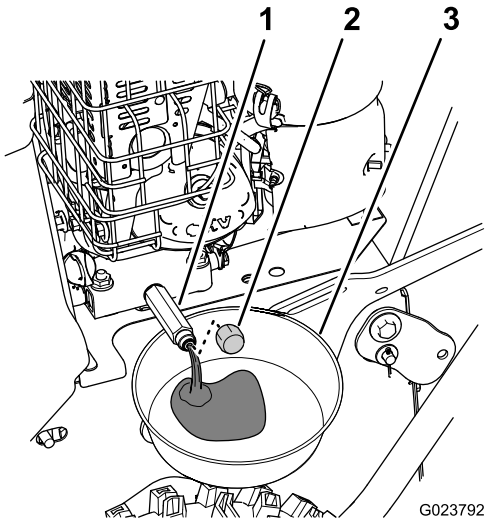

Figure 25

1. Drain fitting
2. Cap
3. Drain pan

2. Allow the oil to drain and then install the oil-drain cap.
3. Clean around the filler neck and remove the dipstick.
4. Fill to the specified capacity with the specified oil and replace the dipstick; refer to Checking the Engine-oil Level (page 19).

   Note: Do not overfill the engine with oil.
5. Wipe up any spilled oil.
6. Start the engine and check for leaks.
7. Stop the engine and check the oil level; refer to Checking the Engine-oil Level (page 19).

Checking the Spark Plug

Service Interval: Every 100 hours

Spark plug type: Champion® RC12YC, Kohler® 12 132 02-S, or Koher 25 132 14-S (RFI compliant)

Spark-plug gap: 0.76 mm (0.030 inch)

1. Disconnect the spark-plug wire from the terminal of the spark plug (Figure 18).
2. Clean the area around the base of the spark plug.
3. Remove the spark plug from the cylinder head by rotating the plug counterclockwise.

4. Examine the plug for wear and damage (Figure 26).

   Important: Replace a cracked, fouled, or dirty spark plug. Do not clean the electrodes, because grit entering the cylinder can damage the engine.

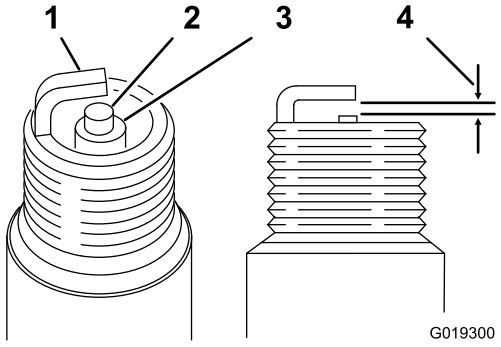

Figure 26

1. Ground electrode
2. Center electrode
3. Insulator
4. Spark-plug gap 0.76 mm (0.030 inch)

5. Check the spark-plug gap with a wire gauge. If necessary, adjust the gap to 0.76 mm (0.030 inch) by carefully bending the ground electrode (Figure 26).
6. Install the spark plug by threading it into the cylinder head and torquing the plug to 20 N-m (14 lb-ft).
7. Connect the spark-plug wire to the terminal of the spark plug.

Fuel System Maintenance

Draining the Fuel System

1. Locate the drain bolt that is in the side port of the carburetor bowl.

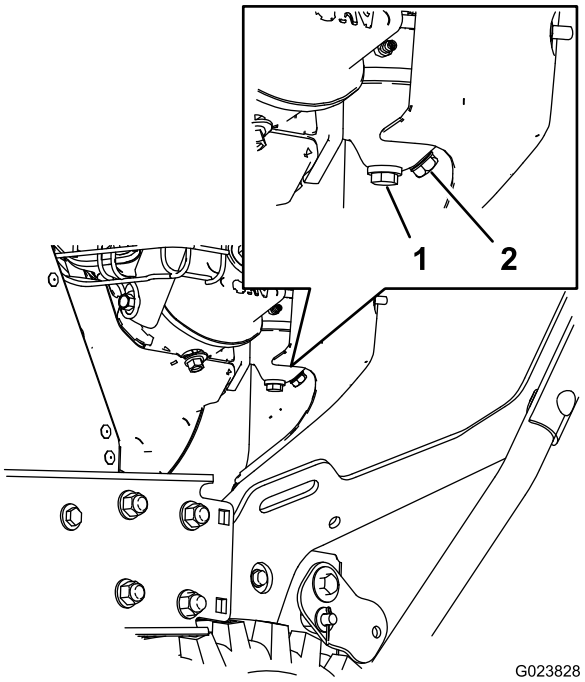

Figure 27

1. Bowl-retaining screw
2. Drain bolt

2. Align the equipment that you will use to collect the fuel beneath the drain screw.
3. Remove the drain screw from the carburetor and allow the fuel to drain from the fuel tank and the carburetor.

   Note: Do not remove the bowl-retaining screw from carburetor.

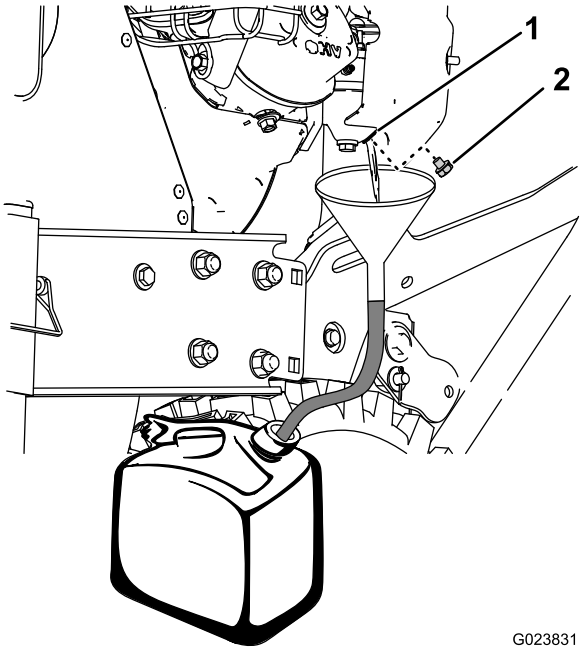

Figure 28

1. Side port of the carburetor bowl
2. Drain bolt

4. Install the drain bolt into the side port of the carburetor.

Drive System Maintenance

Checking the Tire Pressure

Service Interval: Every 50 hours

1. Turn off the engine, wait for all moving parts to stop, and leave engine switch in the Off position.
2. Check the tire pressure in the drive tires.
3. Inflate the drive tires to 117 to 138 kPa (17 to 20 psi).

Checking the Traction Cable

Service Interval: After the first 2 hours

Yearly

1. Turn off the engine, wait for all moving parts to stop, and disconnect the spark-plug wire.
2. With the traction lever disengaged, check the pin in the elongated slot in the left side of the machine above the tire (Figure 29).

   Note: There should be a gap of 6 mm (1/4 inch) from the front of the slot to the front edge of the pin (Figure 29).

   Note: If adjustment is necessary, refer to Adjusting the Traction Cable (page 22).

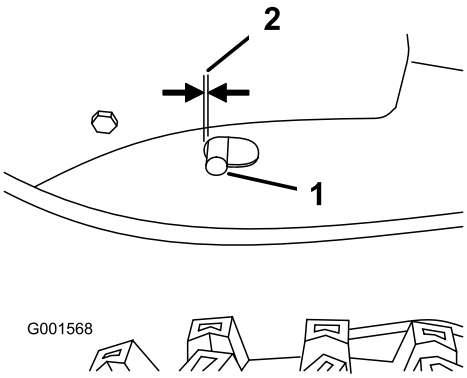

Figure 29

1. Pin
2. 6 mm (1/4 inch)

Adjusting the Traction Cable

If the machine does not drive in the forward or reverse speeds or it drives when you release the traction lever, adjust the traction cable.

With the traction lever disengaged, check the pin in the elongated slot in the left side of the machine above the tire. There should be a gap of 6 mm (1/4 inch) from the front of the slot to the front edge of the pin; refer to Checking the Traction Cable (page 22).

If the left hand traction cable is not properly adjusted, do the following steps:

1. Loosen the jam nut (Figure 30).
2. Loosen or tighten the turnbuckle to adjust the pin until it is the proper gap from the front edge of the slot (Figure 30).
3. Tighten the jam nut (Figure 30).

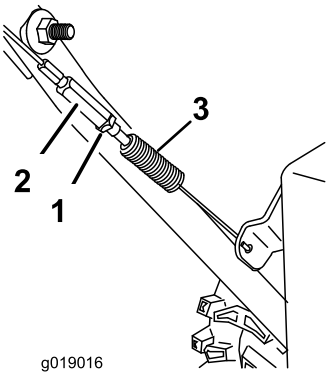

Figure 30

1. Jam nut
2. Turnbuckle

Adjusting the Wheel Clutch Cable

1. Squeeze the lever fully, then check the gap between the bottom of the handle and the wheel-clutch lever end (Figure 31).

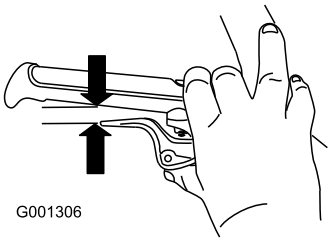

Figure 31

   Note: The gap should be approximately the thickness of a pencil (6 mm or 1/4 inch). If it is greater, loosen the cable clamp nut, slide the cable jacket up slightly, tighten the cable clamp nut, and check the gap again.

2. Repeat for the other cable (Figure 31).

Broom Maintenance

Checking the Broom-shaft Shear Pin

Service Interval: Before each use or daily

1. Move the machine to a level surface.
2. Turn off the engine, wait for all moving parts to stop, and disconnect the spark-plug wire.
3. Check the shear pin located on the broom shaft on either side of the gear box.

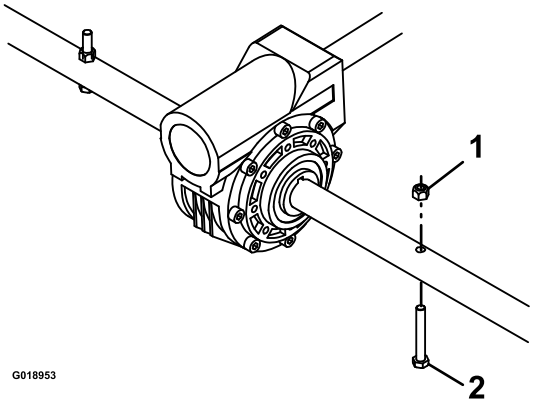

Figure 32

1. Nut
2. Shear pin

4. If the shear pin is damaged, remove the pin, replace it, and secure the it with a nut.

Replacing Worn or Damaged Broom Segments

Service Interval: As required.

1. Raise the broom by setting the caster positions.
2. On both sides of the unit, remove and retain the carriage bolts, washers, and locknuts that secure the end bearings to the broom support.

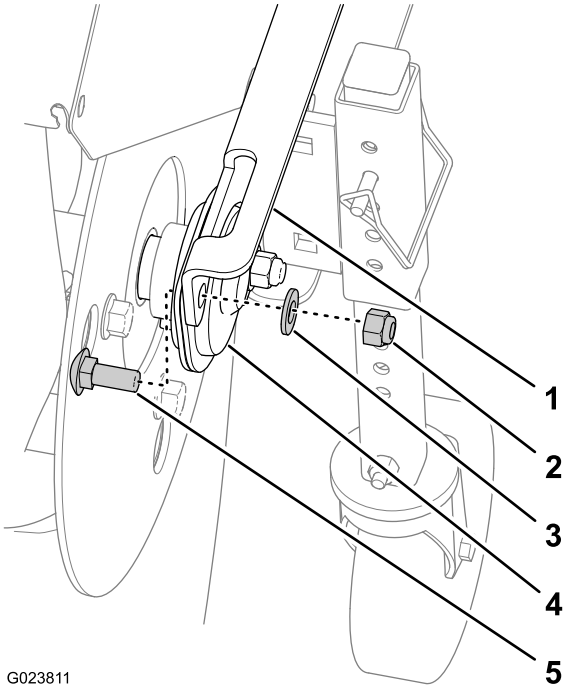

Figure 33

1. Broom support
2. Locknut
3. Washer
4. End bearing
5. Carriage bolt

3. Manually pull the power unit rearward to remove the broom assembly from the unit.
4. Support the spline shaft on either side of the gearbox.
5. Stand the broom core assembly on end so that the removable end retainer plate faces upward (Figure 34).

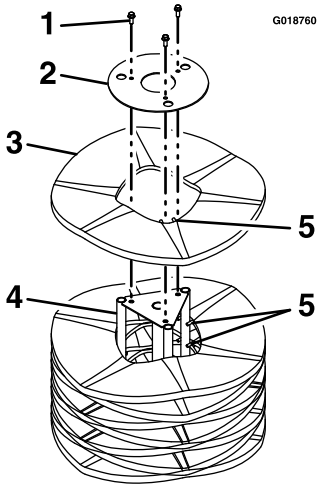

Figure 34

1. Hardware
2. End-retainer plate
3. Broom segment
4. Support shaft
5. Alignment fingers

6. Remove and retain the hardware from the end-retainer plate (Figure 34).
7. Remove the damaged broom segment(s).
8. Install the new segment(s) by staggering the metal ring alignment fingers as shown in Figure 34.

   Important: You may damage the broom assembly if you do not properly install the broom segments.

9. Install the broom assembly onto the unit.

   Important: Make sure the that bearing setscrews are tightened before operating the broom.

Checking the Broom Cable

Service Interval: After the first 2 hours

Yearly

1. Turn off the engine, wait for all moving parts to stop, and disconnect the spark-plug wire.
2. Remove the belt cover and engine shield.
3. With the broom lever disengaged, ensure the gap between the broom-clutch assembly and the tab is 3.2 mm (1/8 inch).

   Note: If the broom is not properly adjusted, refer to Adjusting the Broom Drive (page 24).

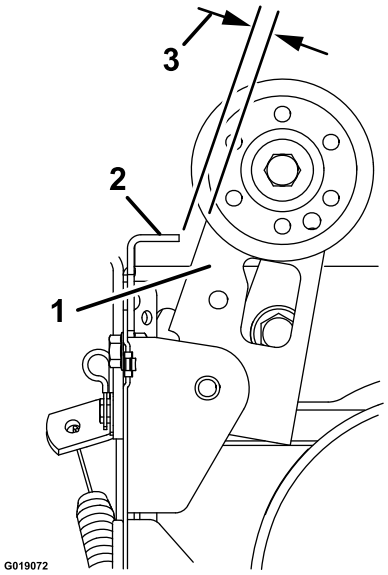

Figure 35

1. Broom-clutch assembly
2. Tab
3. 3.2 mm (1/8 inch)

Adjusting the Broom Drive

If the broom cable is not properly adjusted; refer to Checking the Broom Cable (page 23), and then perform the following steps:

1. Loosen the jam nut (Figure 36).

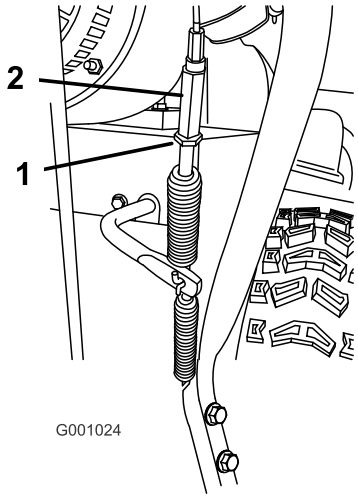

Figure 36

1. Jam nut
2. Turnbuckle

2. Loosen or tighten the turnbuckle that adjusts the tension on the cable (Figure 36).
3. Adjust the turnbuckle until the gap between the broom clutch assembly and the tab is 3.2 mm (1/8 inch) (Figure 35).
4. Tighten the jam nut.
5. If the broom cable is properly adjusted but a problem remains, contact your Authorized Toro Service Dealer.

Maintaining the Belts

Checking the Condition of the Belts

Service Interval: Every 50 hours

1. Remove the knob and washer that secures the engine cover and the belt cover to machine (Figure 37).

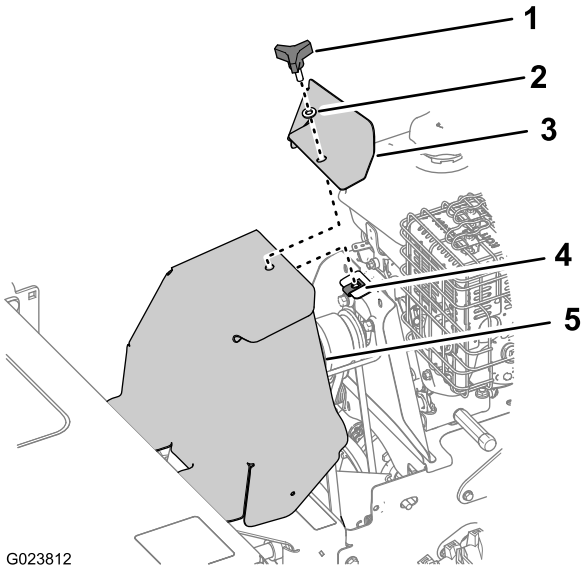

Figure 37

1. Knob
2. Washer
3. Engine cover
4. Plate nut
5. Belt cover

2. Check the 2 belts for damage or wear.

   Note: Replace any damaged or excessively worn belt(s).
3. Align the belt cover and the engine cover to the machine and the plate nut (Figure 37).
4. Secure the belt cover and the engine cover to the machine with the knob and washer (Figure 37).

Removing the Broom-drive Belt

1. Remove the engine cover and the belt cover from the machine; refer to step 1 of Checking the Condition of the Belts (page 24).
2. Remove the 2 bolts and 2 washers that secure the belt guide to the machine, and remove the belt guide and the spacer (Figure 38).

   Note: The spacer is located between the engine and the pulley shield.

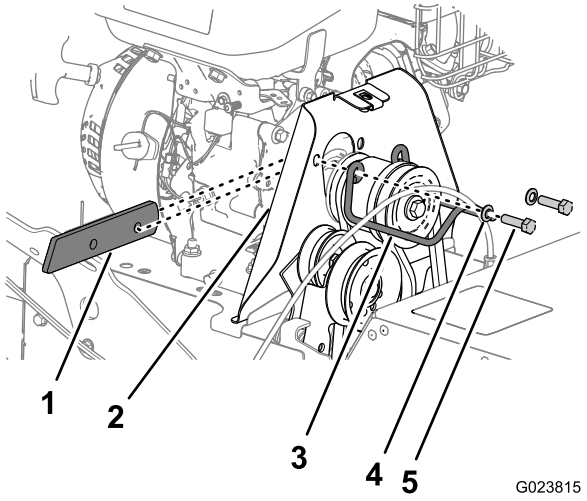

Figure 38

1. Spacer
2. Pulley shield
3. Belt guide
4. Washer
5. Bolt

3. Slip the belt forward over the forward groove of the engine pulley (Figure 39).

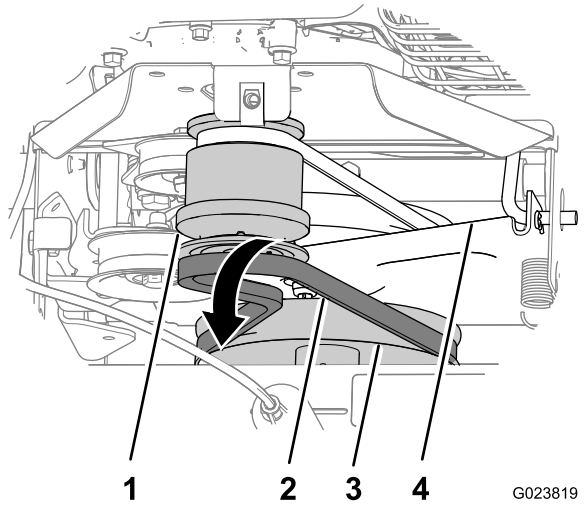

Figure 39

1. Engine pulley
2. Broom drive belt
3. Broom-gearbox pulley
4. Traction-control bracket

4. Slip the belt off of the broom-gearbox pulley, move the belt rearward between the pulley and the traction-control bracket, and remove the belt from the machine (Figure 39).

Installing the Broom-drive Belt

1. Align the replacement belt between the pulley and the traction-control bracket (Figure 39).
2. Slip the belt onto the groove at the bottom of the broom-gearbox pulley (Figure 39).
3. Slip the belt onto the forward groove of the engine pulley (Figure 39).

Note: Ensure that the belt is not twisted.

4. Align the spacer between the engine and the pulley shined and align the holes in the spacer, engine, and shield (Figure 38).
5. Secure the pulley guide to the machine with the bolts and washers (Figure 38) that you removed in step 2 of Removing the Broom-drive Belt (page 24).

Removing the Traction Belt

1. Remove the broom-drive belt; refer to Removing the Broom-drive Belt (page 24)
2. Remove the hair pin from the traction-control rod (Figure 40).

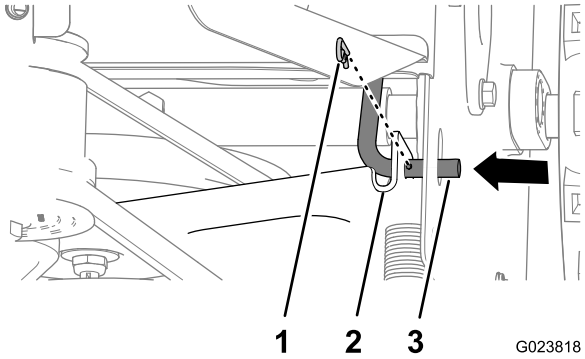

Figure 40

1. Hairpin
2. Traction-control rod
3. Traction-control bracket

3. Remove traction-control rod from the traction-control bracket by moving the rod inward (Figure 40).
4. Pivot the Traction-control bracket and traction pulley forward (Figure 41).

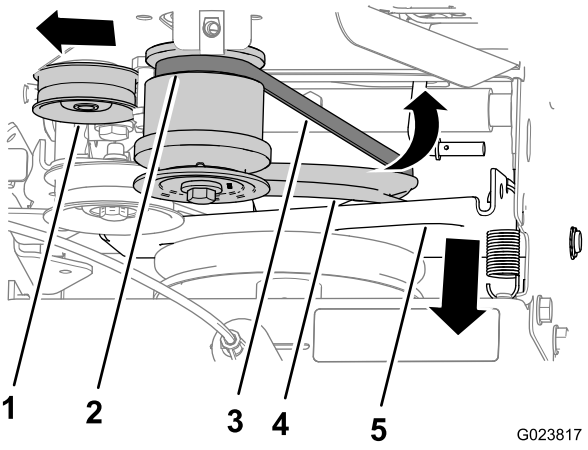

Figure 41

1. Tension pulley
2. Rear groove (engine pulley)
3. Traction belt
4. Traction pulley
5. Traction-control bracket

5. Pull the tension pulley outward (Figure 41).

6. Slip the traction belt out of the groove of the traction pulley and up between the pulley and the friction wheel (Figure 42).

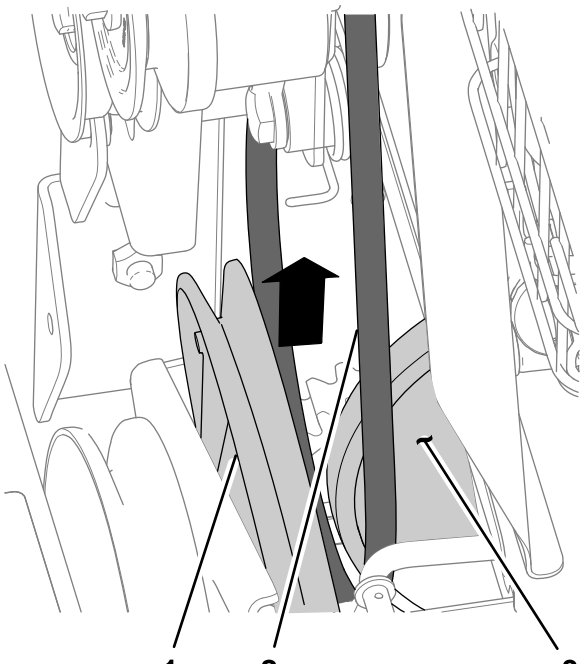

Figure 42

1. Traction pulley
2. Belt
3. Friction wheel

7. Slip the belt off the rear groove of the engine pulley and remove the belt from the machine (Figure 41).

Installing the Traction Belt

1. Align the traction belt between the friction wheel and the traction pulley (Figure 42).
2. Align the belt into the groove at the bottom of the traction pulley (Figure 41).
3. Pull the tension pulley outward (Figure 41).
4. Align the belt into the rear groove of the engine pulley (Figure 41).

   Note: Release the tension pulley.
5. Move the traction-control bracket rearward and align the hole in the bracket with the traction-control rod (Figure 40).
6. Slip the rod through the bracket and secure the rod with the hairpin (Figure 40).
7. Install the broom-drive belt; refer to Installing the Broom-drive Belt (page 25).
8. Install the engine cover and the belt cover; refer to step 1 of Checking the Condition of the Belts (page 24).

Maintaining the Chassis

Checking for Loose Hardware

Service Interval: Before each use or daily

1. Visually inspect the machine for any loose missing hardware or any other possible problem.
2. Tighten all loose hardware before operating the machine.
3. Replace all missing hardware before operating the machine.

Storage

⚠ WARNING

Gasoline fumes are highly flammable, explosive, and dangerous if inhaled. If you sore the machine in an area with an open flame, the gasoline fumes may ignite and cause an explosion.

- **Do not store the machine in a house (living area), basement, or any other area where ignition sources may be present, such as hot water and space heaters, clothes dryers, furnaces, and other like appliances.**
- **Do not tip the machine backward with fuel in the tank; otherwise, fuel may leak out of the machine.**

Preparing the Machine for Storage

1. On the last refueling of the year, add fuel stabilizer to fresh fuel.
2. Add the treated fuel to the machine and run the engine for 10 minutes.
3. Drain the fuel from the fuel system; refer to Draining the Fuel System (page 21)
4. Run the machine until the engine stops from running out of fuel.
5. Prime the engine and start it again.
6. Allow the engine to run until it stops.
7. Allow it to cool.
8. Disconnect the spark-plug wire.
9. Remove the spark plug, add 30 ml (1 oz) of engine oil through the spark-plug hole, and pull the starter rope **slowly** several times.
10. Loosely install the spark plug.
11. Dispose of any unused fuel properly. Recycle it according to local codes, or use it in your automobile.

    Note: Do not store stabilized fuel for more than 90 days.
12. Clean the machine thoroughly.
13. Touch up chipped surfaces with paint available from an Authorized Toro Service Dealer. Sand affected areas before painting, and use a rust preventative to prevent the metal parts from rusting.
14. Tighten all loose screws, bolts, and locknuts. Repair or replace any damaged parts.
15. Cover the machine and store it in a clean, dry place out of the reach of children. Allow the engine to cool before storing it in any enclosure.

Removing the Machine from Storage

1. Remove the spark plug and spin the engine rapidly using the starter to blow the excess oil from the cylinder.
2. Install the spark plug by hand and then torque it to 20.4 N-m (15 ft-lb).
3. Connect the spark-plug wire.
4. Perform the annual maintenance procedures as given in the Recommended Maintenance Schedule.

Troubleshooting

Problem	Possible Cause	Corrective Action
The engine will not start, starts hard, or fails to keep running.	1. The fuel tank is empty. 2. The fuel-shutoff valve is closed. 3. The throttle and choke are not in the correct position. 4. There is dirt in fuel valve. 5. The fuel cap vent is blocked. 6. Dirt, water, or stale fuel is in the fuel system. 7. The air cleaner is dirty. 8. The spark plug is faulty. 9. The spark-plug wire is not connected.	1. Fill the fuel tank. 2. Open the fuel-shutoff valve. 3. Be sure the throttle control is midway between the Slow and Fast positions, and the choke is in the On position for a cold engine or the Off position for a warm engine. 4. Clean the fuel-valve screen and cup. 5. Clean the fuel-cap vent. 6. Contact an authorized engine service dealer. 7. Clean or replace the air cleaner element. 8. Clean, adjust or replace the spark plug. 9. Check the spark-plug wire connection.
The engine loses power.	1. The engine load is excessive. 2. The air cleaner is dirty. 3. The oil level in the crankcase is incorrect. 4. There is dirt in fuel tank filter. 5. Dirt, water, or stale fuel is in the fuel system.	1. Reduce the ground speed or adjust the broom. 2. Clean or replace the air cleaner element. 3. Check the oil level in the crankcase. 4. Clean the fuel-tank filter. 5. Contact an authorized engine service dealer.
The broom does not clean the surface.	1. The broom height is incorrect . 2. The tire pressure in the drive tires is not correct. 3. You are cleaning too much debris at one time.	1. Adjust the broom height. 2. Adjust the tire pressure in the drive tires. 3. Slow down and clear smaller areas of debris.
The broom does not rotate.	1. The broom is clogged. 2. The broom drive lever is not engaged. 3. The broom drive belt is slipping. 4. The belt is broken. 5. The shear pin is broken.	1. Unclog the broom. 2. Engage the broom drive lever. 3. Adjust or replace the belt. 4. Replace the belt. 5. Replace the shear pin.
The machine pulls left or right.	1. The tire pressure in the drive tires is not correct.	1. Adjust the tire pressure in the drive tires.
The machine does not drive.	1. The drive belt is worn, loose or broken. 2. The drive belt is off a pulley.	1. Install a new belt. 2. Replace or adjust the belt.
There is abnormal vibration.	1. The broom assembly is loose or damaged. 2. The engine mounting bolts are loose. 3. The engine pulley or idler pulley is loose. 4. The engine pulley is damaged. 5. The belt is damaged.	1. Tighten the hardware, replace the broom assembly, or contact an Authorized Toro Service dealer. 2. Tighten the engine-mounting bolts. 3. Tighten the appropriate pulley. 4. Contact an Authorized Toro Service dealer. 5. Install a new belt.
The broom does not stop when the drive lever is released.	1. The broom-drive belt is out of adjustment.	1. Check the broom-drive adjustment.

Problem	Possible Cause	Corrective Action
The broom wears out prematurely.	1. You are using the incorrect broom height.	1. Adjust the broom height.
The speed selector is difficult to move or frozen in place.	1. The hex shaft needs lubrication.	1. Lubricate the hex shaft.

Notes:

Notes:

The Toro Warranty

A limited warranty (see warranty periods below)

SWS
Turf Renovation
and
Tree Care

Conditions and Products Covered

The Toro Company and its affiliate, Toro Warranty Company, pursuant to an agreement between them, jointly warrant your Toro Products listed below to be free from defects in materials or workmanship.

This warranty covers the cost of parts and labor, but you must pay transportation costs.

The following time periods apply from the date of purchase:

Products	Warranty Period
Turf Renovation	
Walk-Behind Aerator	1 year
▪Engine	2 years
Stand-On Aerator	1 year
▪Battery	90 days Parts and Labor 1 year Parts Only
▪Engine	2 years
Dethatcher	1 year
▪Engine	2 years
Turf Seeder	1 year
▪Engine	2 years
Tree Care	
Log Splitter	1 year
▪Battery	90 days Parts and Labor 1 year Parts Only
▪Engine	2 years
Stump Grinder	1 year
▪Engine	2 years
Brush Chipper	1 year
▪Battery	90 days Parts and Labor 1 year Parts Only
▪Engine	3 years
Walk-Behind Rotary Broom	1 year
▪Engine	2 years

Where a warrantable condition exists, we will repair the Product at no cost to you including diagnosis, labor, and parts.

Instructions for Obtaining Warranty Service

If you think that your Toro Product contains a defect in materials or workmanship, follow this procedure**:

1. Contact any Authorized Servicing Outlet to arrange service at their dealership. To locate one convenient to you, access our website at www.Toro.com. Select “Where to Buy” and select “Contractor” under product type. You may also call our toll free number below.
2. Bring the product and your proof of purchase (sales receipt) to them.
3. If for any reason you are dissatisfied with the Service Outlet’s analysis or with the assistance provided, contact us at:

   SWS Customer Care Department
   Toro Warranty Company
   8111 Lyndale Avenue South
   Bloomington, MN 55420-1196
   Toll Free: 888-384-9940

**Toro Authorized Rental Customers who have purchased products directly from Toro and have signed the Toro Rental Customer Agreement have the ability to perform their own warranty work. Please visit Toro’s Rental Portal for electronic warranty clam filing procedures or call the toll free number above.

Owner Responsibilities

You must maintain your Toro Product by following the maintenance procedures described in the *Operator’s Manual*. Such routine maintenance, whether performed by a dealer or by you, is at your expense. Parts scheduled for replacement as required maintenance (“Maintenance Parts”), are warranted for the period of time up to the scheduled replacement time for that part. Failure to perform required maintenance and adjustments can be grounds for disallowing a warranty claim.

Items and Conditions Not Covered

Not all product failures or malfunctions that occur during the warranty period are defects in materials or workmanship. This express warranty does not cover the following:

- Product failures which result from installation and use of add-on, modified, or unapproved accessories
- Failure to perform required maintenance and/or adjustments
- Repairs necessary due to failure to follow recommended fuel procedure (consult *Operator's Manual* for more details)
  - Removing contaminants from the fuel system is not covered
  - Use of old fuel (more than one month old) or fuel which contains more than 10% ethanol or more that 15% MTBE
  - Failure to drain the fuel system prior to any period of non-use over one month
- Product failures which result from operating the product in an abusive, negligent or reckless manner
- Parts subject to consumption through use unless found to be defective. Examples of parts which are consumed, include, belts, cutters, blades, teeth, spark plugs, tires, filters, etc.
- Failures caused by outside influence include, weather, storage, contamination, lubricants, additives, or chemicals, etc.
- Normal “wear and tear” items incudes painted surfaces and scratched decals, etc.
- Any component covered by a separate manufacturer’s warranty
- Pickup and delivery charges

General Conditions

Repair by an Authorized Servicing Outlet or Self-Service as an Authorized Rental Customer is your sole remedy under the warranty.

Neither The Toro Company nor Toro Warranty Company is liable for indirect, incidental or consequential damages in connection with the use of the Toro Products covered by this warranty, including any cost or expense of providing substitute equipment or service during reasonable periods of malfunction or non-use pending completion of repairs under this warranty. All implied warranties of merchantability and fitness for use are limited to the duration of this express warranty. Some states do not allow exclusions of incidental or consequential damages, or limitations on how long an implied warranty lasts, so the above exclusions and limitations may not apply to you.

This warranty gives you specific legal rights, and you may also have other rights which vary from state to state.

Except for the engine warranty coverage and the Emissions warranty referenced below, if applicable, there is no other express warranty. The Emissions Control System on your Product may be covered by a separate warranty meeting requirements established by the U.S. Environmental Protection Agency (EPA) or the California Air Resources Board (CARB). Refer to the California Emission Control Warranty Statement supplied with your Product or contained in the engine manufacturer’s documentation for details.

Countries Other than the United States or Canada

Customers who have purchased Toro products outside the United States or Canada should contact their Toro Distributor (Dealer) to obtain guarantee policies for your country, province, or state. If for any reason you are dissatisfied with your Distributor's service or have difficulty obtaining guarantee information, contact the Toro importer. If all other remedies fail, you may contact us at Toro Warranty Company.

Australian Consumer Law: Australian customers will find details relating to the Australian Consumer Law either inside the box or at your local Toro Dealer.