Form No. 3375-743 Rev B

TORO®

Count on it.

Operator's Manual

TimeCutter® ZS 4200TF Riding Mower

Model No. 74390—Serial No. 313000001 and Up

Register at www.Toro.com.
Original Instructions (EN)

3375-743 B

This machine is a ride-on, rotary-blade lawnmower intended to be used by homeowners in residential applications. It is primarily designed for cutting grass on well-maintained lawns. It is not designed for cutting brush, mowing grass and other growth alongside highways, or for agricultural uses.

⚠ WARNING

CALIFORNIA
Proposition 65 Warning

This product contains a chemical or chemicals known to the State of California to cause cancer, birth defects, or reproductive harm.

The engine exhaust from this product contains chemicals known to the State of California to cause cancer, birth defects, or other reproductive harm.

Use of this product may cause exposure to chemicals known to the State of California to cause cancer, birth defects, or other reproductive harm.

Important: This engine is not equipped with a spark arrester muffler. It is a violation of California Public Resource Code Section 4442 to use or operate the engine on any forest-covered, brush-covered, or grass-covered land. Other states or federal areas may have similar laws.

This spark ignition system complies with Canadian ICES-002.

The enclosed *Engine Owner's Manual* is supplied for information regarding the US Environmental Protection Agency (EPA) and the California Emission Control Regulation of emission systems, maintenance, and warranty. Replacements may be ordered through the engine manufacturer.

For models with stated engine horsepower, the gross horsepower of the engine was laboratory tested by the engine manufacturer in accordance with SAE J1995 and rated to J2723.

⚠ WARNING

Removing standard original equipment parts and accessories may alter the warranty, traction, and safety of the machine. Failure to use original Toro parts could cause serious injury or death. Making unauthorized changes to the engine, fuel or venting system, may violate EPA and CARB regulations.

Replace all parts including, but not limited to, tires, belts, blades, and fuel system components with original Toro parts.

Introduction

Read this information carefully to learn how to operate and maintain your product properly and to avoid injury and product damage. You are responsible for operating the product properly and safely.

You may contact Toro directly at www.Toro.com for product and accessory information, help finding a dealer, or to register your product.

Whenever you need service, genuine Toro parts, or additional information, contact an Authorized Service Dealer or Toro Customer Service and have the model and serial numbers of your product ready.Figure 1 identifies the location of the model and serial numbers on the product. Write the numbers in the space provided.

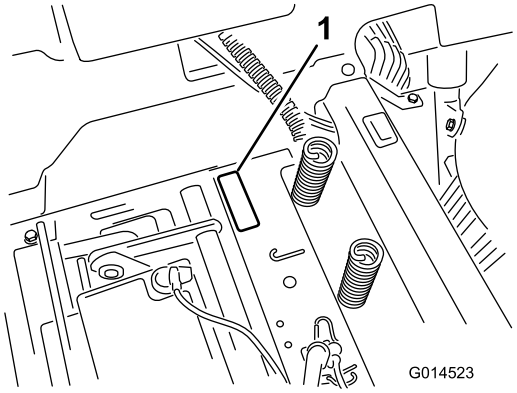

Figure 1
Under the seat

1. Model and serial number plate

Write the product model and serial numbers in the space below:

Model No. _____

Serial No. _____

This manual identifies potential hazards and has safety messages identified by the safety alert symbol (Figure 2), which signals a hazard that may cause serious injury or death if you do not follow the recommended precautions.



Figure 2

1. Safety alert symbol.

This manual uses two other words to highlight information. **Important** calls attention to special mechanical information and **Note** emphasizes general information worthy of special attention.

© 2013—The Toro® Company
8111 Lyndale Avenue South
Bloomington, MN 55420

Contact us at www.Toro.com.
Printed in the USA.
All Rights Reserved

Contents

Introduction 2
Safety 4
- Safe Operating Practices 4
- Toro Riding Mower Safety 5
- Slope Indicator 6
- Safety and Instructional Decals 7

Product Overview 12
- Controls 13

Operation 14
- Think Safety First 14
- Before Starting 16
- Starting the Engine 16
- Operating the Blades 17
- Testing the Safety Interlock System 18
- Stopping the Engine 18
- Driving 18
- Stopping the Machine 20
- Adjusting the Height of Cut 20
- Adjusting the Anti-Scalp Rollers (For 42 inch Mower Decks) 20
- Positioning the Seat 21
- Adjusting the Motion Control Levers 21
- Pushing the Machine by Hand 21
- Grass Deflector 22
- Converting to Side Discharge Mode 22
- Operating Tips 23

Maintenance 25
- Recommended Maintenance Schedule(s) 25
- Premaintenance Procedures 26
  - Raising the Seat 26
- Lubrication 26
  - Greasing the Bearings 26
- Engine Maintenance 27
  - Servicing the Air Cleaner 27
  - Servicing the Engine Oil 27
  - Servicing the Spark Plug 29
  - Cleaning the Cooling System 30
- Fuel System Maintenance 31
  - Replacing the In-line Fuel Filter 31
- Electrical System Maintenance 32
  - Charging the Battery 32
  - Servicing the Fuses 33
- Drive System Maintenance 34
  - Checking the Tire Pressure 34
  - Releasing the Electric Brake 34
- Mower Maintenance 35
  - Servicing the Cutting Blades 35
  - Leveling the Mower Deck 37
  - Removing the Mower 39
  - Mower Belt Maintenance 39
  - Installing the Mower 40
  - Replacing the Grass Deflector 40
- Cleaning 42
  - Washing the Underside of the Mower 42

Storage 43
- Cleaning and Storage 43

Troubleshooting 44

Safety

improper use or maintenance by the operator or owner can result in injury. To reduce the potential for injury, comply with these safety instructions and always pay attention to the safety alert symbol, which means CAUTION, WARNING, or DANGER-"personal safety instruction." Failure to comply with the instruction may result in personal injury or death.

Safe Operating Practices

The following instructions are adapted from ANSI standard B71.4-2012.

Training

- Read the Operator's Manual and other training material. If the operator(s) or mechanic(s) can not read English it is the owner's responsibility to explain this material to them.
- Become familiar with the safe operation of the equipment, operator controls, and safety signs.
- All operators and mechanics should be trained. The owner is responsible for training the users.
- Never let children or untrained people operate or service the equipment. Local regulations may restrict the age of the operator.
- The owner/user can prevent and is responsible for accidents or injuries occurring to himself or herself, other people or property.

Preparation

- Evaluate the terrain to determine what accessories and attachments are needed to properly and safely perform the job. Only use accessories and attachments approved by the manufacturer.
- Wear appropriate clothing including hard hat, safety glasses and hearing protection. Long hair, loose clothing or jewelry may get tangled in moving parts.
- Inspect the area where the equipment is to be used and remove all objects such as rocks, toys and wire which can be thrown by the machine.
- Check that operator's presence controls, safety switches and shields are attached and functioning properly. Do not operate unless they are functioning properly.

Operation

- Lightning can cause severe injury or death. If lightning is seen or thunder is heard in the area, do not operate the machine; seek shelter.
- Never run an engine in an enclosed area.
- Only operate in good light, keeping away from holes and hidden hazards.
- Be sure all drives are in neutral and parking brake is engaged before starting engine. Only start engine from the operator's position.
- Be sure of your footing while using this machine, especially when backing up. Walk, don't run. Never operate on wet grass. Reduced footing could cause slipping.
- Slow down and use extra care on hillsides. Be sure to travel side to side on hillsides. Turf conditions can affect the machine's stability. Use caution while operating near drop-offs.
- Slow down and use caution when making turns and when changing directions on slopes.
- Never raise deck with the blades running.
- Never operate with the PTO shield, or other guards not securely in place. Be sure all interlocks are attached, adjusted properly, and functioning properly.
- Never operate with the discharge deflector raised, removed or altered, unless using a grass catcher.
- Do not change the engine governor setting or overspeed the engine.
- Stop on level ground, disengage drives, engage parking brake (if provided), shut off engine before leaving the operator's position for any reason including emptying the catchers or unclogging the chute.
- Stop equipment and inspect blades after striking objects or if an abnormal vibration occurs. Make necessary repairs before resuming operations.
- Keep hands and feet away from the cutting unit.
- Look behind and down before backing up to be sure of a clear path.
- Keep pets and bystanders away.
- Slow down and use caution when making turns and crossing roads and sidewalks. Stop blades if not mowing.
- Be aware of the mower discharge direction and do not point it at anyone.
- Do not operate the mower under the influence of alcohol or drugs.
- Use care when loading or unloading the machine into or from a trailer or truck.
- Use care when approaching blind corners, shrubs, trees, or other objects that may obscure vision.
- Lightning can cause severe injury or death. If lightning is seen or thunder is heard in the area, do not operate the machine; seek shelter.

Safe handling of fuels

- To avoid personal injury or property damage, use extreme care in handling gasoline. Gasoline is extremely flammable and the vapors are explosive.

- Extinguish all cigarettes, cigars, pipes, and other sources of ignition.
- Use only an approved fuel container.
- Never remove fuel cap or add fuel with the engine running.
- Allow engine to cool before refueling.
- Never refuel the machine indoors.
- Never store the machine or fuel container where there is an open flame, spark, or pilot light such as on a water heater or on other appliances.
- Never fill containers inside a vehicle or on a truck or trailer bed with a plastic liner. Always place containers on the ground away from your vehicle before filling.
- Remove equipment from the truck or trailer and refuel it on the ground. If this is not possible, then refuel such equipment with a portable container, rather than from a fuel dispenser nozzle.
- Keep the nozzle in contact with the rim of the fuel tank or container opening at all times until fueling is complete. Do not use a nozzle lock open device.
- If fuel is spilled on clothing, change clothing immediately.
- Never overfill fuel tank. Replace fuel cap and tighten securely.

Maintenance and storage

- Disengage drives, set parking brake, stop engine and remove key or disconnect spark plug wire. Wait for all movement to stop before adjusting, cleaning or repairing.
- Clean grass and debris from cutting unit, drives, mufflers, and engine to help prevent fires. Clean up oil or fuel spillage.
- Let engine cool before storing and do not store near flame.
- Shut off fuel while storing or transporting. Do not store fuel near flames or drain indoors.
- Park machine on level ground. Set parking brake. Never allow untrained personnel to service machine.
- Use jack stands to support components when required.
- Carefully release pressure from components with stored energy.
- Disconnect the battery or remove spark plug wire before making any repairs. Disconnect the negative terminal first and the positive last. Reconnect the positive first and negative last.
- Use care when checking blades. Wrap the blade(s) or wear gloves, and use caution when servicing them. Only replace blades. Never straighten or weld them.
- Keep hands and feet away from moving parts. If possible, do not make adjustments with the engine running.
- Keep all parts in good working condition and all hardware tightened. Replace all worn or damaged decals.

Hauling

- Use care when loading or unloading the machine into a trailer or truck.
- Use full width ramps for loading machine into trailer or truck.
- Tie the machine down securely using straps, chains, cable, or ropes. Both front and rear straps should be directed down and outward from the machine.

Toro Riding Mower Safety

The following list contains safety information specific to Toro products or other safety information that you must know that may not be included in the ANSI standards.

- Stop the engine, move the motion control levers to neutral and outward to the park position, disengage the blade control switch, remove the key, and disconnect spark plug wire(s) before performing any service, repairs, maintenance, or adjustments.
- Keep your hands, feet, hair, and loose clothing away from any attachment discharge area, the underside of the mower, and away from any moving parts while the engine is running.
- Do not touch the equipment or attachment parts which may be hot from operation. Allow the machine to cool before attempting to maintain, adjust, or service it.
- Battery acid is poisonous and can cause burns. Protect your face, eyes, and clothing when working with a battery.
- Battery gases can explode. Keep cigarettes, sparks, and flames away from the battery.
- Use only Toro approved attachments. The warranty may be voided if the machine is used with unapproved attachments.
- If loading the machine onto a trailer or truck, use a single, full-width ramp only. The ramp angle should not exceed 15 degrees.

Slope Indicator

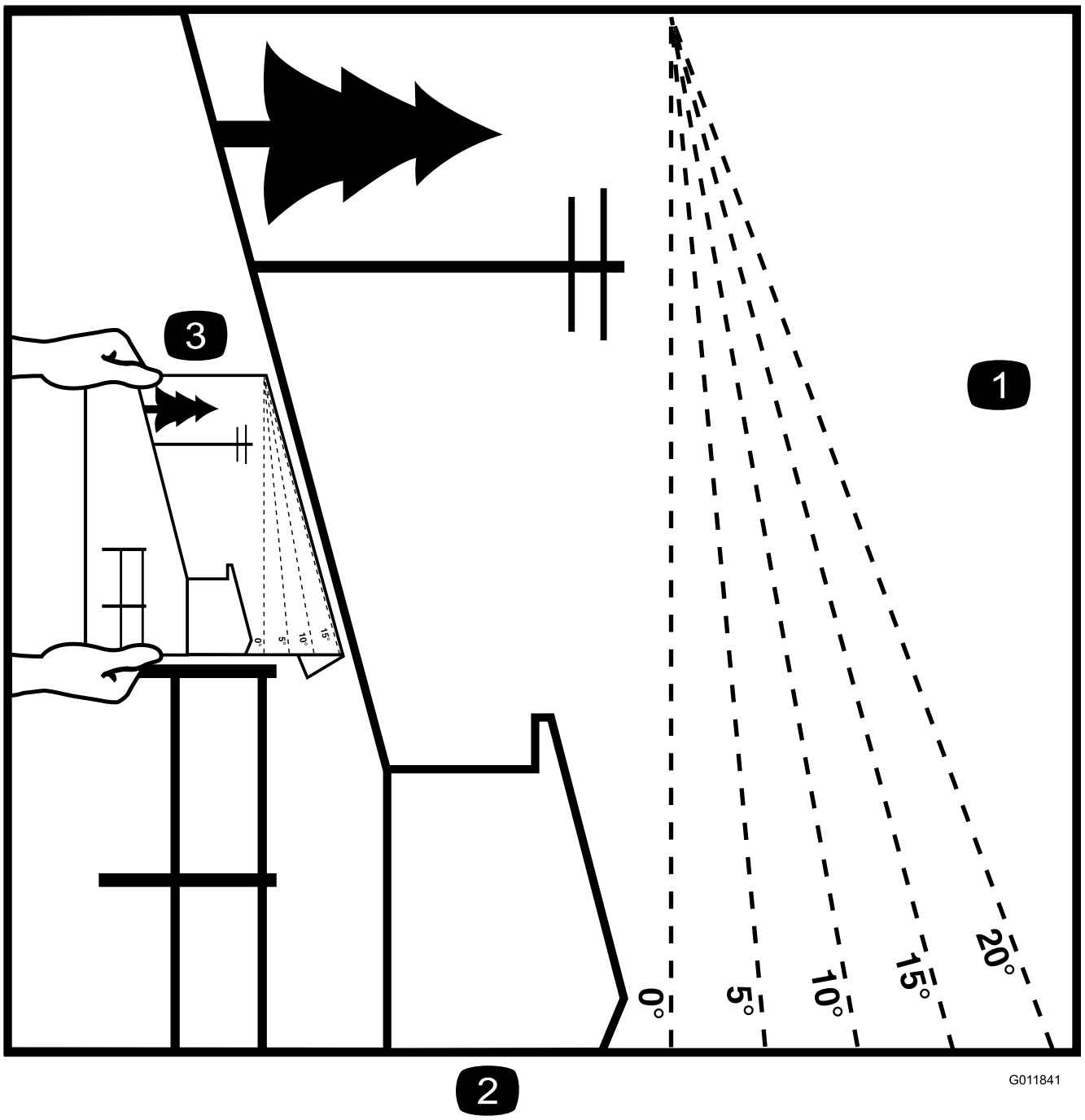

Figure 3

This page may be copied for personal use.

1. The maximum slope you can safely operate the machine on is **15 degrees**. Use the slope chart to determine the degree of slope of hills before operating. **Do not operate this machine on a slope greater than 15 degrees.** Fold along the appropriate line to match the recommended slope.
2. Align this edge with a vertical surface, a tree, building, fence pole, etc.
3. Example of how to compare slope with folded edge.

Safety and Instructional Decals

Safety decals and instructions are easily visible to the operator and are located near any area of potential danger. Replace any decal that is damaged or lost.

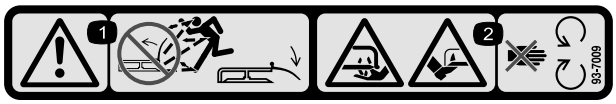

93-7009

1. Warning—don't operate the mower with the deflector up or removed; keep the deflector in place.
2. Cutting/dismemberment hazard of hand or foot, mower blade—stay away from moving parts.

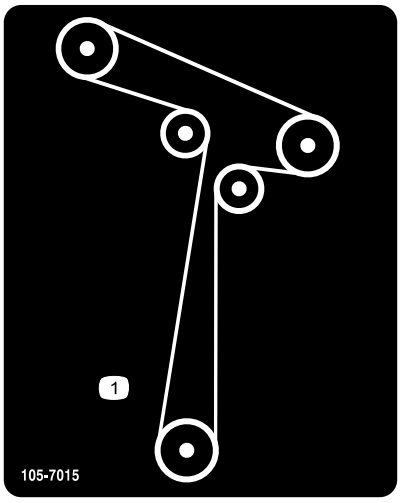

105-7015

For models with 42-inch decks

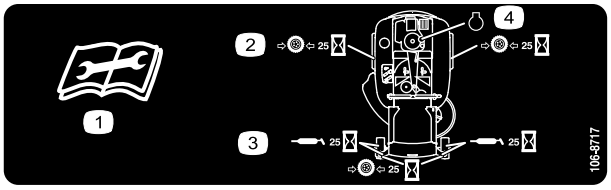

106-8717

1. Read the instructions before servicing or performing maintenance.
2. Check tire pressure every 25 operating hours.
3. Grease every 25 operating hours.
4. Engine

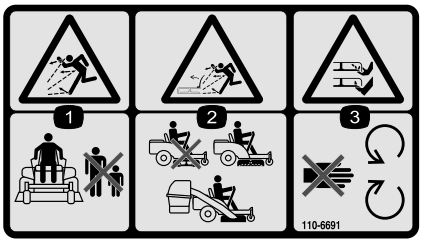

110-6691

1. Thrown object hazard—keep bystanders a safe distance from the machine.
2. Thrown object hazard, mower—do not operate without the deflector, discharge cover, or grass collection system in place.
3. Cutting/dismemberment of hand or foot—stay away from moving parts.

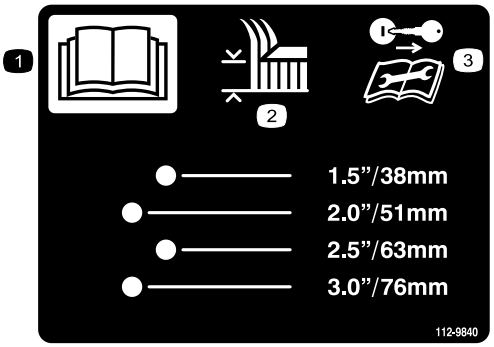

112-9840

1. Read the *Operator's Manual*.
2. Height-of-cut
3. Remove the ignition key and read the instructions before servicing or performing maintenance.

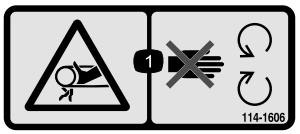

114-1606

1. Entanglement hazard, belt—keep all guards in place.

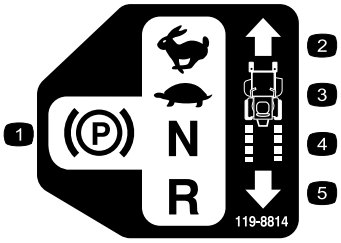

119-8814

1. Parking position
2. Fast
3. Slow
4. Neutral
5. Reverse

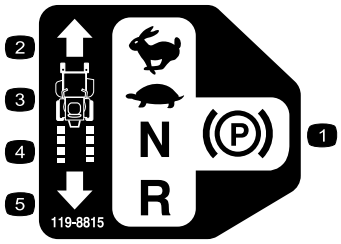

119-8815

1. Parking position
2. Fast
3. Slow
4. Neutral
5. Reverse

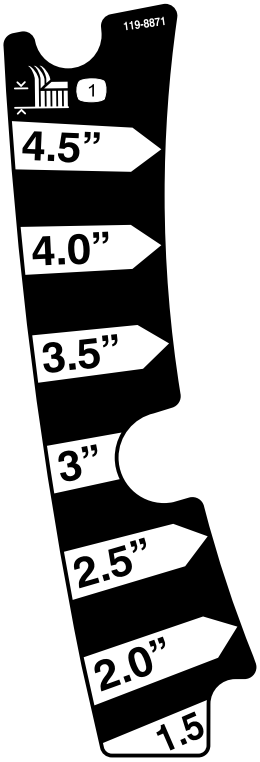

120-5469

Certain models only

1. Height-of-cut

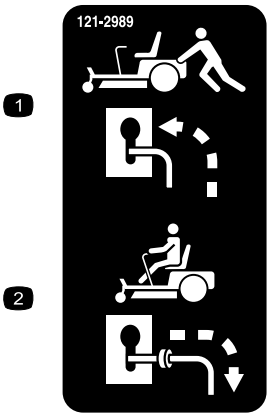

121-2989

1. Bypass lever position for pushing the machine
2. Bypass lever position for operating the machine

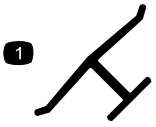

Manufacturer's Mark

1. Indicates the blade is identified as a part from the original machine manufacturer.



Battery Symbols

Some or all of these symbols are on your battery

1. Explosion hazard
2. No fire, open flame, or smoking.
3. Caustic liquid/chemical burn hazard
4. Wear eye protection
5. Read the *Operator's Manual.*
6. Keep bystanders a safe distance from the battery.
7. Wear eye protection; explosive gases can cause blindness and other injuries
8. Battery acid can cause blindness or severe burns.
9. Flush eyes immediately with water and get medical help fast.
10. Contains lead; do not discard.

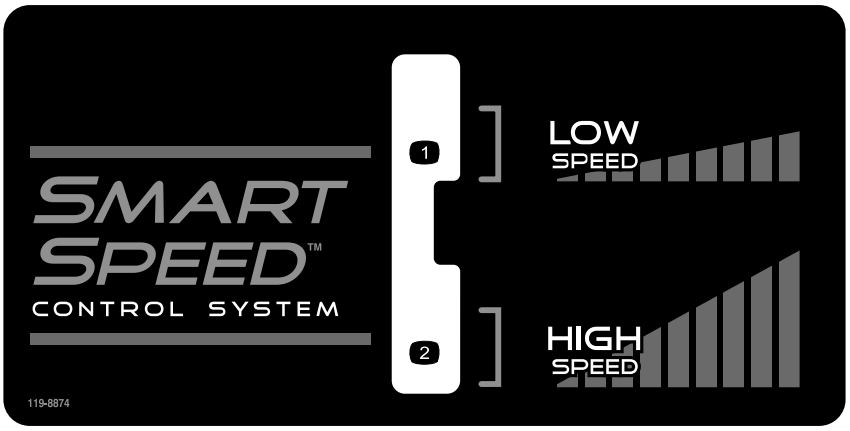

120-5468

1. Low speed
2. High speed

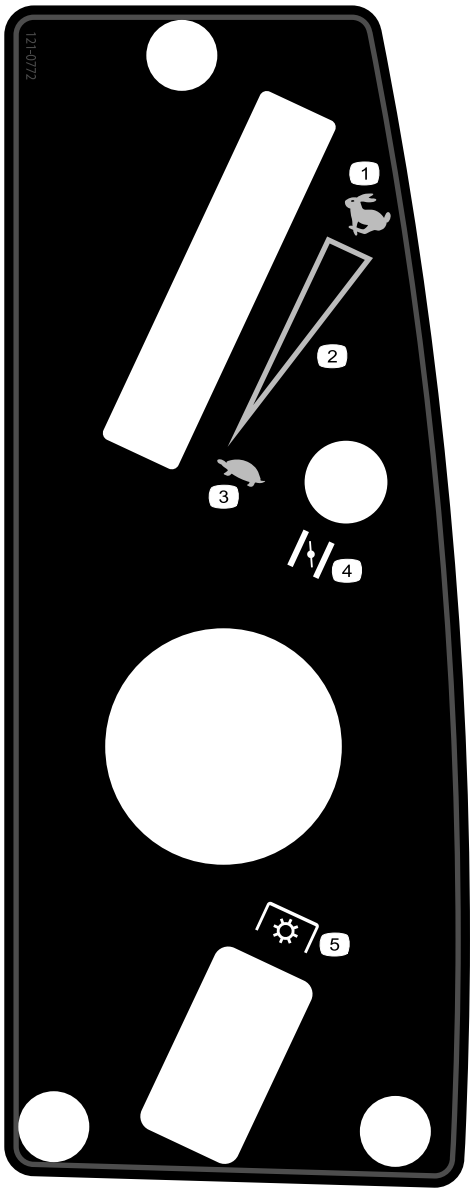

121-0772

1. Fast
2. Continuous variable setting
3. Slow
4. Choke
5. Power take-off (PTO), Blade control switch

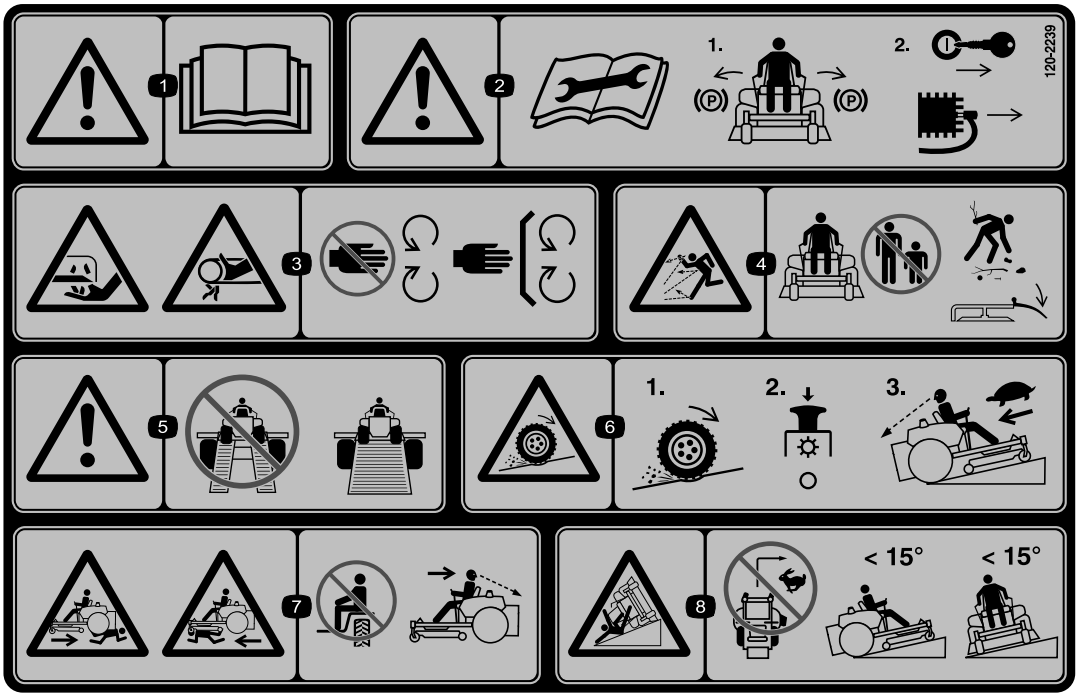

120-2239

1. Warning—read the *Operator's Manual*.
2. Warning—read the instructions before servicing or performing maintenance; move the motion control levers to the park (brake) position, remove the ignition key and disconnect the spark plug wire.
3. Cutting/dismemberment hazard, mower blade; entanglement hazard, belt—stay away from moving parts, keep all guards and shields in place.
4. Thrown object hazard—keep bystanders a safe distance from the machine, pick up debris before operating, keep deflector in place.
5. Warning—do not use split ramps, use a full ramps when transporting machine.
6. Loss of traction/control hazard, slopes—loss of traction/control on a slope, disengage the blade control switch (PTO), proceed off the slope slowly.
7. Crushing/dismemberment hazard of bystanders, reversing; crushing/dismemberment hazard of bystanders—do not carry passengers, look behind and down when reversing.
8. Tipping hazard—do not mow slopes greater than 15 degrees, avoid sudden and sharp turns while on slopes.

Product Overview

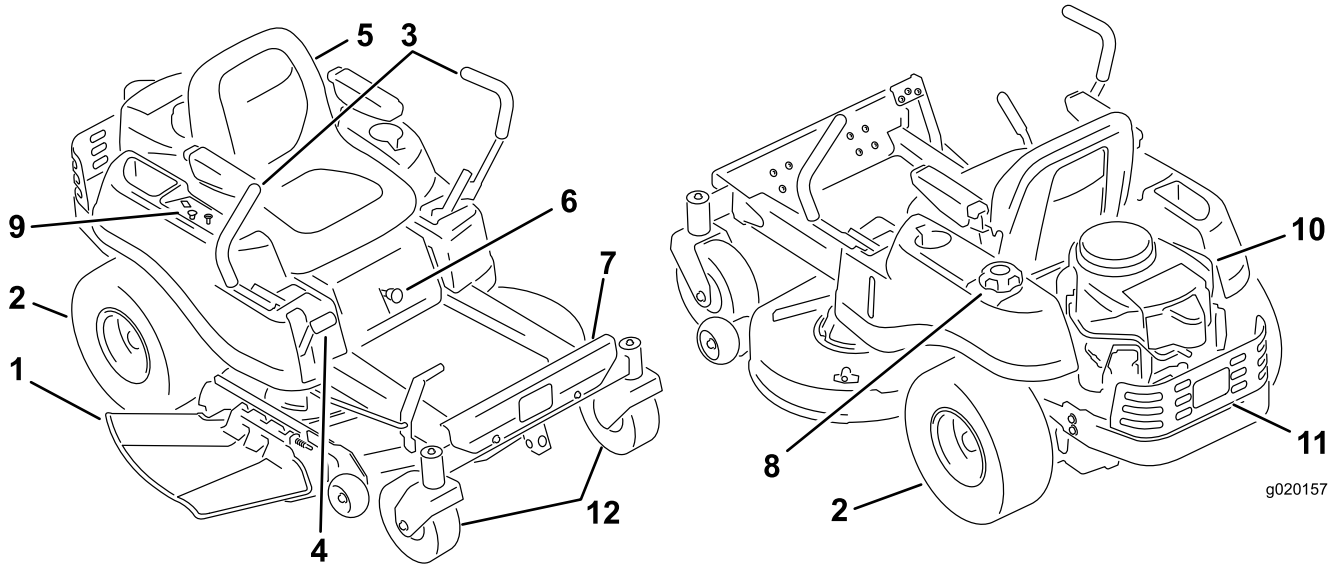

Figure 4

1. Deflector	4. Height of cut lever	7. Footrest	10. Engine
2. Rear drive wheel	5. Operator seat	8. Fuel tank cap	11. Engine guard (certain models only)
3. Motion control levers	6. Smart Speed™ lever	9. Control panel	12. Front caster wheels

Controls

Become familiar with all of the controls in and before you start the engine and operate the machine.

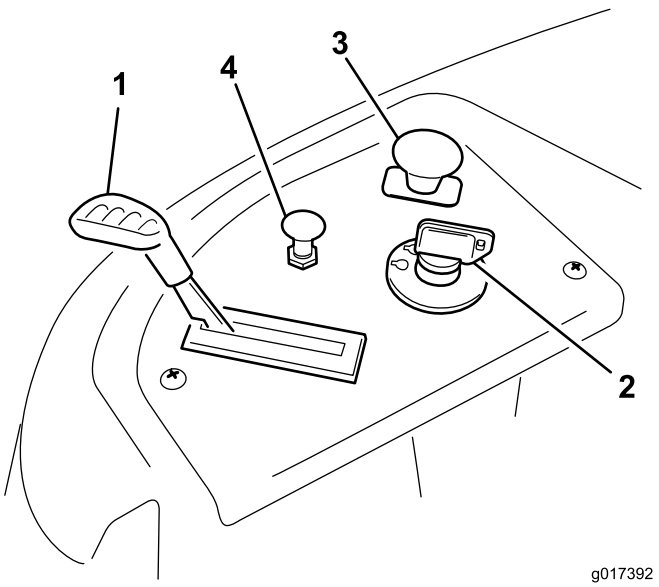

Figure 5
Control Panel

1. Throttle
2. Ignition switch
3. Blade control switch (power take-off)
4. Choke

Ignition Switch

The ignition switch has three positions, Off, Run and Start. The key will turn to Start and move back to Run upon release. Turning the key to the Off position will stop the engine; however, always remove the key when leaving the machine to prevent someone from accidentally starting the engine ().

Throttle Control

The throttle controls the engine speed and it has a continuous variable setting from Slow to Fast ().

Choke Control

Pull up on the Choke control until it stops to choke the engine (). Push down on the Choke control for normal engine operation

Blade Control Switch (Power Take-Off)

The blade control switch, represented by a power take-off (PTO) symbol, engages and disengages power to the mower blades ().

Motion Control Levers and Parking Brake Position

The motion control levers are speed sensitive controls of independent wheel motors. Moving a lever forward or backward turns the wheel on the same side forward or in reverse; wheel speed is proportional to the amount the lever is moved. Move the control levers outward from the center to the park position and exit the machine (). Always position the motion control levers into the park position when you stop the machine or leave it unattended.

Smart Speed™ Control System Lever

The Smart Speed™ Control System lever, located below the operating position, gives the operator a choice to drive the machine at two speed ranges, high and low ().

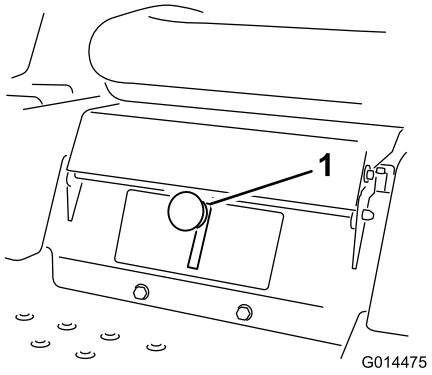

Figure 6

1. Smart speed lever

Fuel Window

The fuel window located on the left hand side of the machine can be used to verify the presence of gasoline in the tank ().

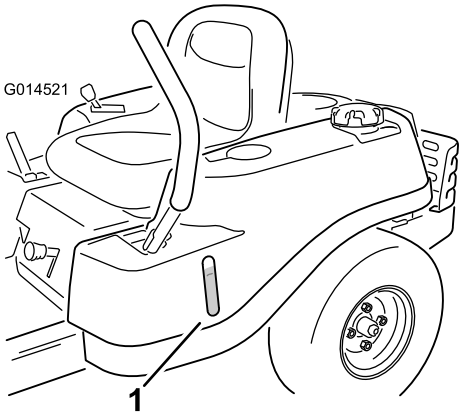

Figure 7

1. Fuel presence window

Height-of-Cut Lever

The height of cut lever allows the operator to lower and raise the deck from the seated position. When the lever is moved up, toward the operator the deck is raised from the ground and when moved down, away from the operator it is lowered toward the ground. Only adjust the height of cut while machine is not moving ().

Hour Meter

The hour meter records the number of hours when the operator is in the seat and the ignition switch is in the ON position ().

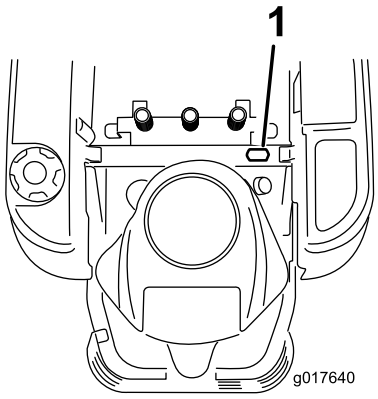

Figure 8

1. Hour meter location behind the seat

Operation

Note: Determine the left and right sides of the machine from the normal operating position.

Think Safety First

Operating Safety

Please carefully read all of the safety instructions and decals in the safety section. Knowing this information could help you, your family, pets or bystanders avoid injury.

⚠ DANGER

Mowing on wet grass or steep slopes can cause sliding and loss of control.

Wheels dropping over edges can cause rollovers, which may result in serious injury, death or drowning.

A loss of traction is a loss of steering control.

To avoid loss of control and possibility of rollover:

- **Do not mow near drop-offs or near water.**
- **Do not mow slopes greater than 15 degrees.**
- **Reduce speed and use extreme caution on slopes.**
- **When mowing slopes, gradually work from lower to higher areas on the incline.**
- **Avoid sudden turns or rapid speed changes.**
- **Turn up, into an incline when changing directions on slopes. Turning down the slope reduces traction.**
- **Attachments change the handling characteristics of the machine. Use extra caution when using attachments with the machine.**

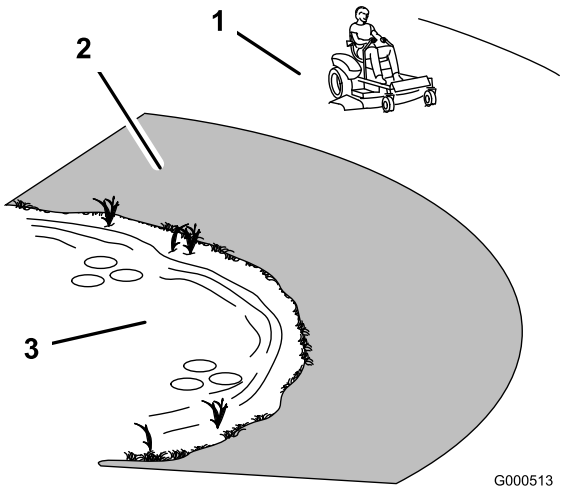

Figure 9

1. Safe Zone-use the TimeCutter here
2. Use walk behind mower and/or hand trimmer near drop-offs and water.
3. Water

Fuel Safety

⚠ DANGER

In certain conditions, gasoline is extremely flammable and highly explosive. A fire or explosion from gasoline can burn you and others and can damage property.

- **Fill the fuel tank outdoors, in an open area, when the engine is cold. Wipe up any gasoline that spills.**
- **Never fill the fuel tank inside an enclosed trailer.**
- **Do not fill the fuel tank completely full. Add gasoline to the fuel tank until the fuel reaches the base of the filler neck. This empty space in the tank allows gasoline to expand.**
- **Never smoke when handling gasoline, and stay away from an open flame or where gasoline fumes may be ignited by a spark.**
- **Store gasoline in an approved container and keep it out of the reach of children. Never buy more than a 30-day supply of gasoline.**
- **Do not operate without entire exhaust system in place and in proper working condition.**

⚠ DANGER

In certain conditions during fueling, static electricity can be released causing a spark which can ignite the gasoline vapors. A fire or explosion from gasoline can burn you and others and can damage property.

- **Always place gasoline containers on the ground away from your vehicle before filling.**
- **Do not fill gasoline containers inside a vehicle or on a truck or trailer bed because interior carpets or plastic truck bed liners may insulate the container and slow the loss of any static charge.**
- **When practical, remove gas-powered equipment from the truck or trailer and refuel the equipment with its wheels on the ground.**
- **If this is not possible, then refuel such equipment on a truck or trailer from a portable container, rather than from a gasoline dispenser nozzle.**
- **If a gasoline dispenser nozzle must be used, keep the nozzle in contact with the rim of the fuel tank or container opening at all times until fueling is complete.**

⚠ WARNING

Gasoline is harmful or fatal if swallowed. Long-term exposure to vapors can cause serious injury and illness.

- **Avoid prolonged breathing of vapors.**
- **Keep face away from nozzle and gas tank or conditioner opening.**
- **Keep gas away from eyes and skin.**

Understanding the Safety Interlock System

⚠ WARNING

If safety interlock switches are disconnected or damaged the machine could operate unexpectedly causing personal injury.

- **Do not tamper with the interlock switches.**
- **Check the operation of the interlock switches daily and replace any damaged switches before operating the machine.**

The safety interlock system is designed to prevent the engine from starting unless:

- The blades are disengaged.
- The motion control levers are in the park position.

The safety interlock system also is designed to stop the engine whenever the control levers are out of the park position and you rise from the seat.

Before Starting

Recommended Fuel

- For best results, use only clean, fresh, unleaded gasoline with an octane rating of 87 or higher ((R+M)/2 rating method).
- Oxygenated fuel with up to 10% ethanol or 15% MTBE by volume is acceptable.
- **Do Not** use ethanol blends of gasoline (such as E15 or E85) with more than 10% ethanol by volume. Performance problems and/or engine damage may result which may not be covered under warranty.
- **Do Not** use gasoline containing methanol.
- **Do Not** store fuel either in the fuel tank or fuel containers over the winter unless a fuel stabilizer is used.
- **Do Not** add oil to gasoline.

Using Stabilizer/Conditioner

Use a fuel stabilizer/conditioner in the machine to provide the following benefits:

- Keeps gasoline fresh during storage of 90 days or less. For longer storage it is recommended that the fuel tank be drained.
- Cleans the engine while it runs.
- Eliminates gum-like varnish buildup in the fuel system, which causes hard starting.

Add the correct amount of gas stabilizer/conditioner to the gas.

Note: A fuel stabilizer/conditioner is most effective when mixed with fresh gasoline. To minimize the chance of varnish deposits in the fuel system, use fuel stabilizer at all times.

Filling the Fuel Tank

Make sure the engine is shut off and the motion controls are in the park position. Tank maximum capacity is 2.9 gallons.

Important: Do Not overfill fuel tank. Fill the fuel tank to the bottom of the filler neck. The empty space in the tank allows the fuel to expand. Overfilling may result in fuel leakage or damage to the engine or emission system.

1. Clean around the fuel tank cap and remove the cap.

   Note: You can use the fuel window to verify the presence of gasoline before filling the tank (Figure 10).

2. **Slowly** add regular, unleaded gasoline until the fuel reaches the base of the filler neck (Figure 10).

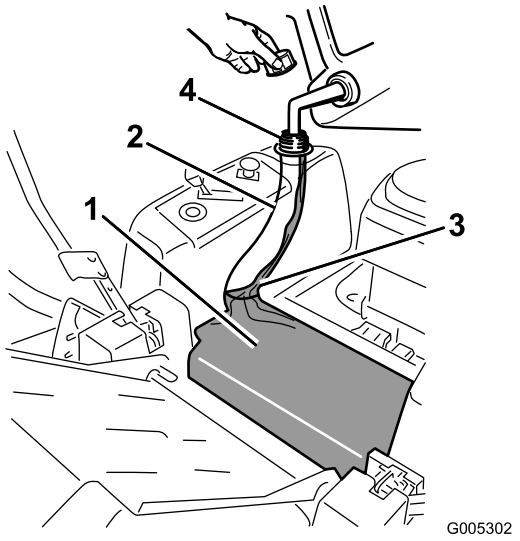

Figure 10

1. Fuel tank cap
2. Fill opening
3. Filler neck
4. Base of filler neck, **DO NOT FILL PAST HERE**
5. Fuel window

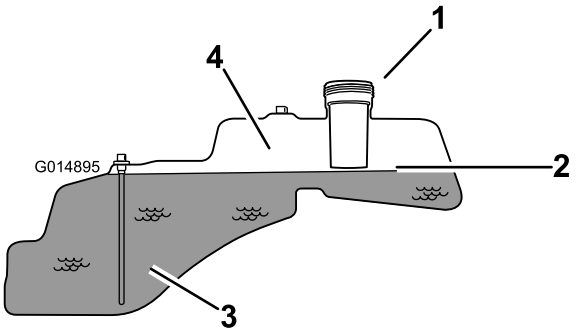

Figure 11

1. Fill opening
2. Base of filler neck, **DO NOT FILL PAST HERE**
3. Fuel
4. Empty space for fuel expansion.

3. Install the fuel tank cap securely and tighten until it "clicks". Wipe up any gasoline that may have spilled.

Checking the Engine Oil Level

Before you start the engine and use the machine, check the oil level in the engine crankcase; refer to Checking the Oil Level in the Engine Maintenance section.

Starting the Engine

1. Sit down on the seat and move the motion controls outward to the park position.
2. Move the throttle control to fast (Figure 12).
3. Disengage the blades by moving the blade control switch to Off (Figure 12)

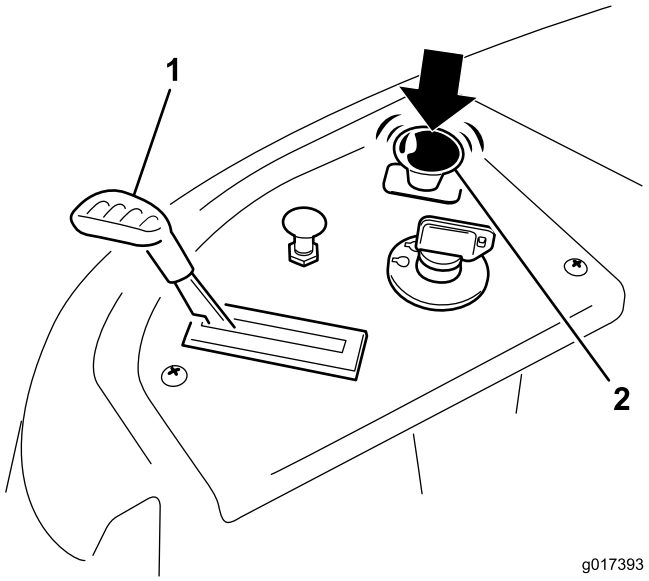

Figure 12

1. Throttle
2. Blade control switch—Off position

4. Pull up on the Choke control before starting a cold engine (Figure 13).

   Note: A warm or hot engine may not require choking.

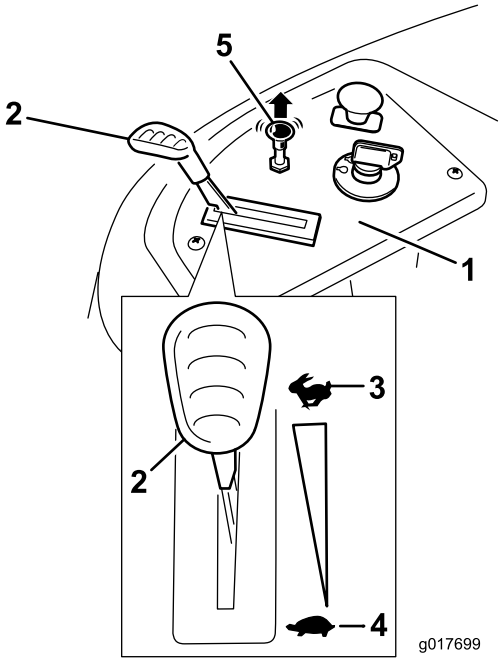

Figure 13

1. Control panel
2. Throttle
3. Fast
4. Slow
5. Choke control

5. Turn the ignition key to Start to energize the starter. When the engine starts, release the key (Figure 14).

   Important: Do not engage the starter for more than 10 seconds at a time. If the engine fails to start, allow a 60 second cool-down period between attempts. Failure to follow these instructions can damage the starter motor.

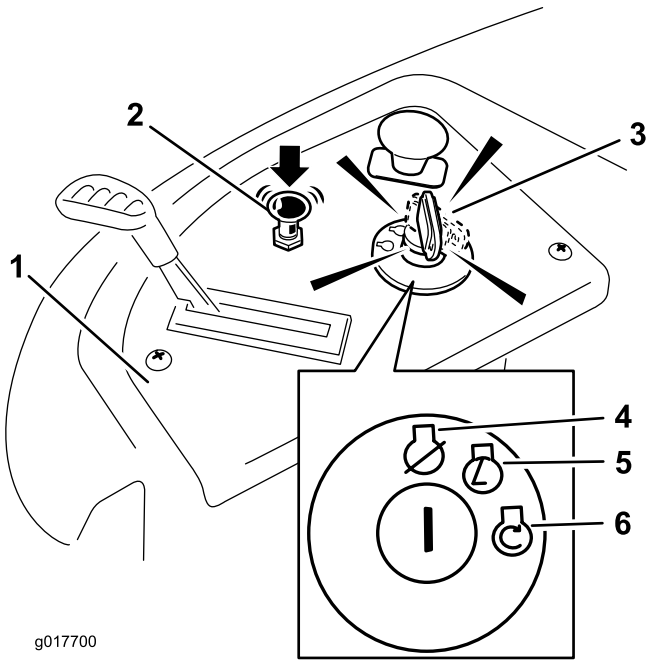

Figure 14

1. Control panel
2. Choke control
3. Ignition key
4. Off
5. Run
6. Start

6. After the engine starts, push down on the Choke control (Figure 14). If the engine stalls or hesitates, pull up on the Choke control and let the engine run for a few seconds. Then push down on the Choke control. Repeat this as required.

Operating the Blades

The blade control switch, represented by a power take-off (PTO) symbol, engages and disengages power to the mower blades. This switch controls power to any attachments that draw power from the engine, including the mower deck and cutting blades.

Engaging the Blades

Important: Do not engage the blades when parked in tall grass. Belt or clutch damage can occur.

1. Release pressure on the motion control levers and place the machine in neutral.
2. Move the throttle to the Fast position.

   Note: Always engage the blades with the throttle in the Fast position.

3. Pull up on the blade control switch to move it to the On position and engage the blades (Figure 15).

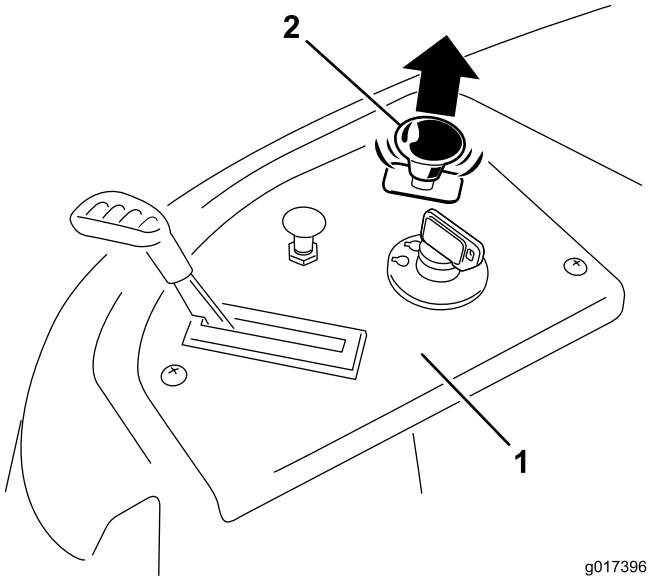

Figure 15

1. Control panel
2. Blade control switch—On position

Disengaging the Blades

Push down on the blade control switch to move it to the Off position and disengage the blades (Figure 16).

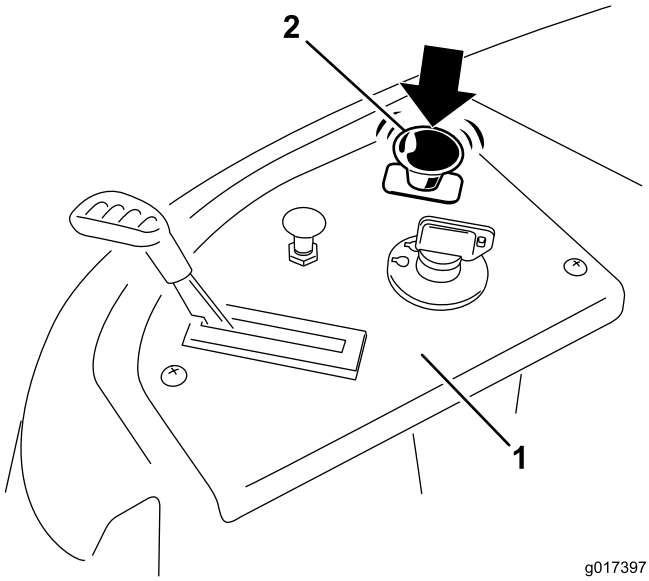

Figure 16

1. Control panel
2. Blade control switch—Off

Testing the Safety Interlock System

Test the safety interlock system before you use the machine each time. If the safety system does not operate as described below, have an Authorized Service Dealer repair the safety system immediately.

1. While sitting on the seat, with the control levers in park position, and move the blade control switch to On. Try starting the engine; the engine should not crank.
2. While sitting on the seat, move the blade control switch to Off. Move either motion control lever to the center, unlocked position. Try starting the engine; the engine should not crank. Repeat with the other motion control lever.
3. While sitting on the seat, move the blade control switch to Off, and lock the motion control levers in the park position. Start the engine. While the engine is running, engage the blade control switch, and rise slightly from the seat; the engine should stop.
4. While sitting on the seat, move the blade control switch to Off, and lock the motion control levers in the park position. Start the engine. While the engine is running, move the motion control levers to the center, unlocked position, engage the blade control switch, and rise slightly from the seat; the engine should stop.

Stopping the Engine

⚠ CAUTION

Engine damage can occur if the engine is stopped suddenly from high speed loaded operation.

Reduce the engine speed to idle for one minute before shutting the engine off.

1. Disengage the blades by moving the blade control switch to Off (Figure 16).
2. Move the throttle lever to the **Slow** position (Figure 13).
3. Keep the engine running for one minute.
4. Turn the ignition key to **Off** (Figure 14) and remove the key.

Driving

Driving the machine benefits from an understanding of what zero turn radius mower means. The drive wheels turn independently, powered by hydraulic motors on each axle; hence one side can turn in reverse while the other turns forward causing the machine to spin rather than turn. This vastly improves the machine maneuverability but may require some adjustment if the operator is unfamiliar.

⚠ WARNING

The machine can spin very rapidly. The operator may lose control of the machine and cause personal injury or damage to the machine.

- **Use caution when making turns.**
- **Slow the machine down before making sharp turns.**

The throttle control regulates the engine speed as measured in rpm (revolutions per minute). Placing the throttle control in the Fast position can be best for performance. For most applications, operating in the full throttle position is desirable.

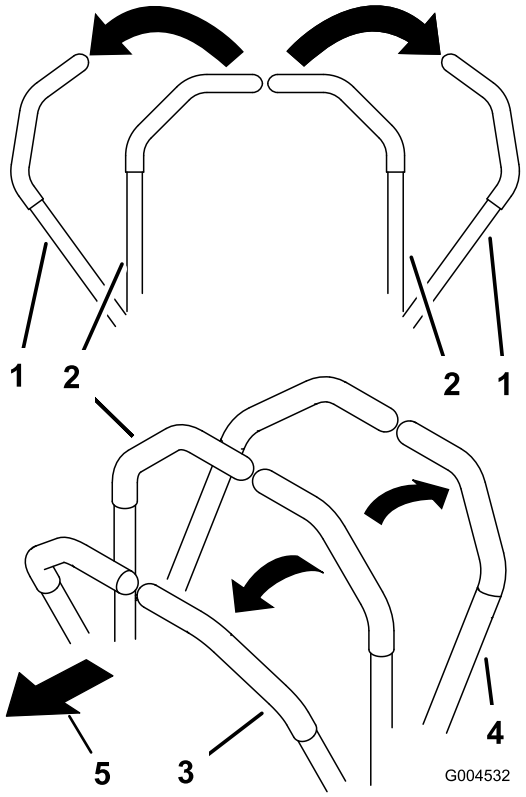

Figure 17

1. Park (brake) position
2. Center unlock position
3. Forward
4. Backward
5. Front of machine

Using the Smart Speed™ Control System

The Smart Speed™ Control System lever, located below the operating position (Figure 18), gives the operator a choice to drive the machine at two ground speed ranges, high and low.

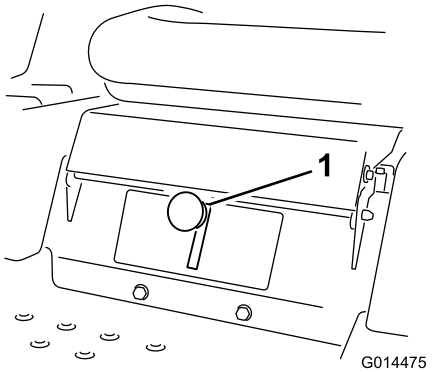

Figure 18

1. Smart speed lever

To change speeds:

1. Move the motion control levers to neutral and outward to the park position; disengage the blade control switch.

⚠ WARNING

Removing your hands from the motion control levers while the machine is in motion can result in a loss of control causing harm to you or bystanders.

Always stop the machine and move the motion control levers to the park position before adjusting the Smart Speed™ Control System.

2. Adjust the lever to the desired position.

Forward

1. Move the levers to the center, unlocked position.
2. To go forward, slowly push the motion control levers forward (Figure 17).

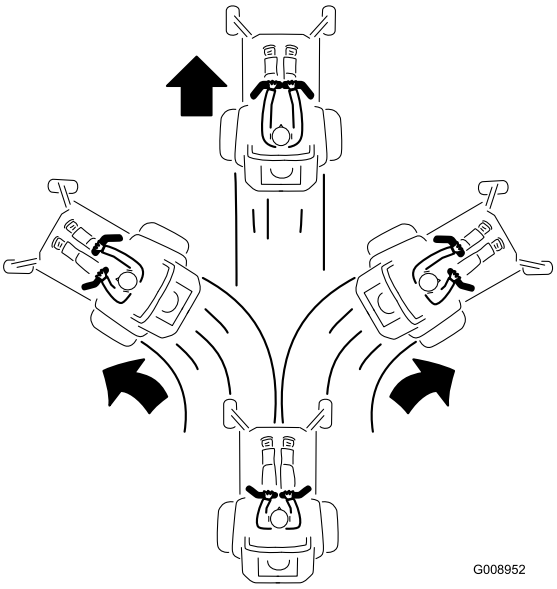

Figure 19

To go straight, apply equal pressure to both motion control levers (Figure 17).

To turn, release pressure on the motion control lever toward the direction you want to turn (Figure 19).

The farther you move the motion control levers in either direction, the faster the machine will move in that direction.

To stop, pull the motion control levers to neutral.

Backward

1. Move the levers to the center, unlocked position.

2. To go backward, look behind you and down as you slowly pull the motion control levers rearward (Figure 20).

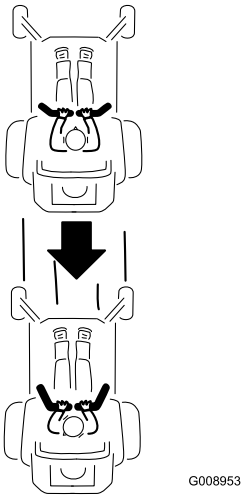

Figure 20

To go straight, apply equal pressure to both motion control levers (Figure 20).

To turn, release the pressure on the motion control lever toward the direction you want to turn.

To stop, push the motion control levers to neutral.

Stopping the Machine

To stop the machine, move the motion control levers to neutral and outward to the park position, disengage the blade control switch, ensure the throttle is in the slow position, and turn the ignition key to the off position. Remove the key from the ignition switch.

⚠ WARNING

Children or bystanders may be injured if they move or attempt to operate the mower while it is unattended.

Always remove the ignition key and move the motion control levers outward to the park position when leaving the machine unattended, even if just for a few minutes.

Adjusting the Height of Cut

Height-of-cut is controlled by the lever located to the right of the operating position (Figure 21).

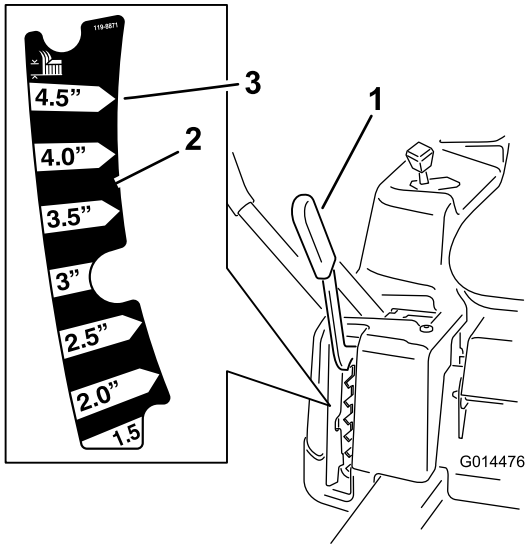

Figure 21

1. Height-of-cut lever
2. Height-of-cut positions
3. 4.5 inch (115 mm), Transport position

1. Pull up and inward on the lever to move it to the desired cutting position.
2. Once at the desired cutting position, slowly lower the lever until it engages the position.

The transport position is the highest height-of-cut position or cutting height **4.5** inch (114 mm) (Figure 21).

Adjusting the Anti-Scalp Rollers (For 42 inch Mower Decks)

Whenever you change the height-of-cut, it is recommended to adjust the height of the anti-scalp rollers.

Note: Adjust the anti-scalp rollers so the rollers do not touch the ground in normal, flat mowing areas.

1. Disengage the blade control switch (PTO), move the motion control levers to the neutral lock position and set the parking brake.
2. Stop the engine, remove the key, and wait for all moving parts to stop before leaving the operating position.
3. Adjust the anti-scalp rollers to one of the following positions:
   - Upper hole—use this position with the mower deck in the 63mm (2-1/2 inch) and below height-of-cut positions (Figure 22).
   - Lower hole—use this position with the mower deck in the 76mm (3 inch) and above height-of-cut positions (Figure 22).

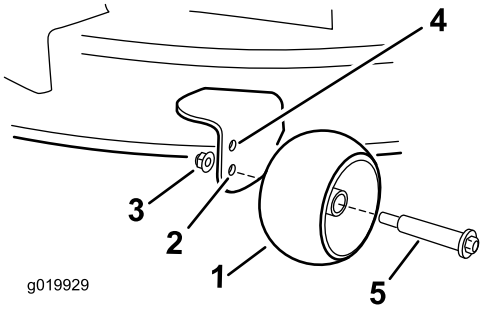

Figure 22

1. Anti-scalp roller
2. Lower hole—the mower deck in the 76mm (3 inch) and above height-of-cut positions
3. Flange Nut
4. Upper hole—the mower deck in the 63mm (2-1/2 inch) and below height-of-cut positions
5. Bolt

Positioning the Seat

1. Raise the seat and loosen the adjustment bolts just enough that seat can move (Figure 23).

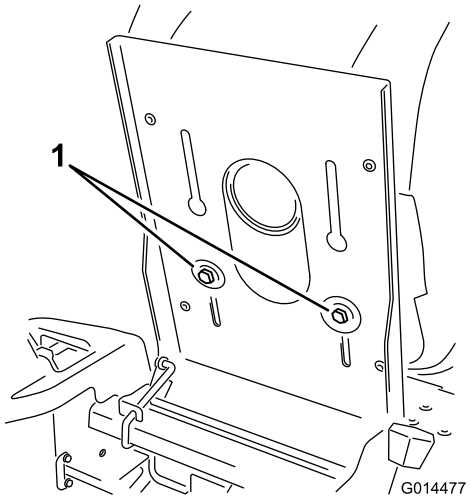

Figure 23

1. Adjustment bolt

2. Move the seat to the desired position and tighten the bolts.

Adjusting the Motion Control Levers

Adjusting the Height

The motion control levers can be adjusted higher or lower for maximum operator comfort.

1. Remove the 2 bolts holding the control lever to the control arm shaft (Figure 24).
2. Move the control lever to the next set of holes. Secure the lever with the 2 bolts (Figure 24).

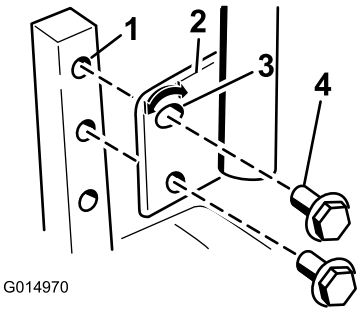

Figure 24

1. Control arm shaft
2. Control lever
3. Slotted, upper hole
4. Bolt

3. Repeat the adjustment for the opposite control lever.

Adjusting the Tilt

The motion control levers can be tilted fore or aft for maximum operator comfort.

1. Loosen the upper bolt holding the control lever to the control arm shaft.
2. Loosen the lower bolt just enough to pivot the control lever fore or aft (Figure 24). Tighten both bolts to secure the control in the new position.
3. Repeat the adjustment for the opposite control lever.

Pushing the Machine by Hand

Important: Always push the machine by hand. Never tow the machine because damage may occur.

This machine has an electric brake mechanism and to push the machine the ignition key needs to be in the Run position. The battery needs to be charged and functioning for the electric brake to be disengage.

To Push the Machine

1. Park the machine on a level surface and disengage the blade control switch.
2. Move the motion control levers outward to park position, stop the engine, and wait for all moving parts to stop before leaving the operating position.
3. Locate the bypass levers on the frame on both sides of the engine.
4. Move the bypass levers forward through the key hole and down to lock them in place as shown inFigure 25 . Ensure this is done for each lever.
5. Move the motion control levers inward to the neutral position and turn the ignition key to the run position. Do not start the machine.

The machine is now able to be pushed by hand.

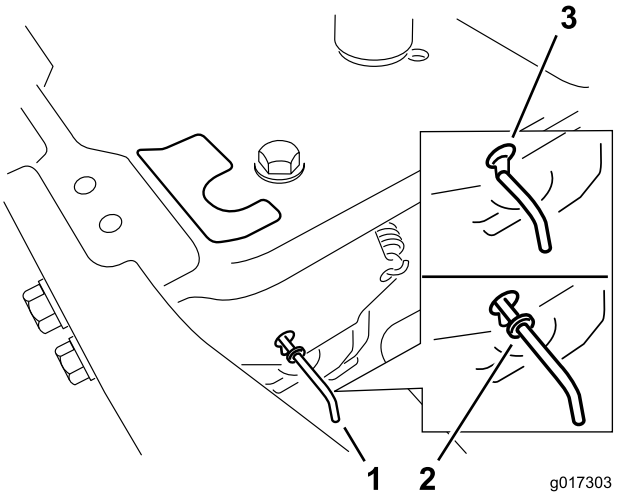

Figure 25

1. Bypass lever location
2. Lever position for operating the machine
3. Lever position for pushing the machine

6. When finished, ensure the key has been returned to the Stop position to avoid draining the battery charge.

If the machine fails to move the electric brake may still be engaged. If necessary the electric brake can be released manually. Refer to the Releasing the Electric Brake (page 34) procedure in Drive Maintenance.

To Operate the Machine

Move the bypass levers rearward through the key hole and down to lock them in place as shown in Figure 25. Ensure this is done for each lever.

Grass Deflector

The mower has a hinged grass deflector that disperses clippings to the side and down toward the turf.

⚠ DANGER

Without the grass deflector, discharge cover, or complete grass catcher assembly mounted in place, you and others are exposed to blade contact and thrown debris. Contact with rotating mower blade(s) and thrown debris will cause injury or death.

- **Never remove the grass deflector from the mower because the grass deflector routes material down toward the turf. If the grass deflector is ever damaged, replace it immediately.**
- **Never put your hands or feet under the mower.**
- **Never try to clear discharge area or mower blades unless you move the blade control switch to Off and rotate the ignition key to Off. Also remove the key and pull the wire off the spark plug(s).**

Converting to Side Discharge Mode

⚠ DANGER

Open holes in the mower expose you and others to thrown debris. Debris thrown out of the holes in the mower can cause injury.

- **Never operate the mower without hardware mounted in all holes in the mower.**
- **Install hardware in the mounting holes when you remove the baffle.**

1. Stop the engine and remove the ignition key.
2. Remove the mower as described in your *Operator's Manual*.
3. Turn the mower upside down.
4. Remove the existing mower blades installed on your deck; refer to the Removing the Blades (page 36) for more information.
5. Remove any debris and grass clippings from the underside of the deck.
6. Remove the baffle assembly to the right side of the mower deck with a carriage bolt (5/16 x 3/4 inch) and 2 flange nuts (5/16 inch) as shown in Figure 26.

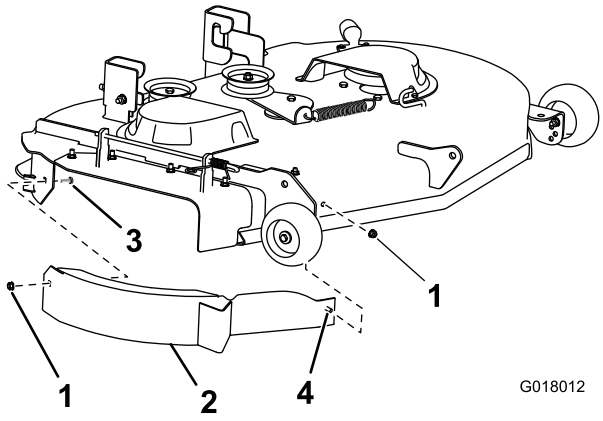

Figure 26

1. Flange nut (5/16 inch)
2. Baffle assembly
3. Carriage bolt (5/16 x 3/4 inch)
4. Welded post

7. Install the cutoff baffle (supplied with the mower) at the side-discharge opening on the mower deck (Figure 27).

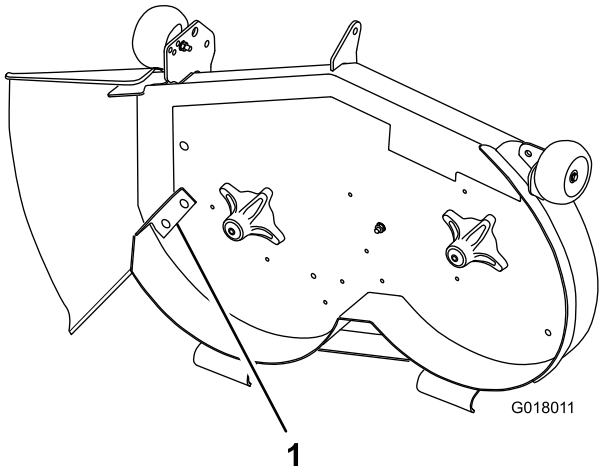

Figure 27

1. Cutoff baffle

8. For optimum performance in side discharge mode, install the side discharge blades (Toro part no. 110-6568-03) as described in the Installing the Blades (page 37) section.
9. Install the mower as described in the Installing the Mower (page 40) section.

Operating Tips

Fast Throttle Setting

For best mowing and maximum air circulation, operate the engine at the Fast position. Air is required to thoroughly cut grass clippings, so do not set the height-of-cut so low as to totally surround the mower by uncut grass. Always try to have one side of the mower free from uncut grass, which allows air to be drawn into the mower.

Using the Smart Speed™ Control System

The Smart Speed™ Control System lever, located below the operating position, gives the operator a choice to drive the machine at two speed ranges, high and low. An operator can benefit from the lower speed setting when maneuvering the machine in tight spaces or operating around delicate landscapes. The low setting can also be used to operate the machine at a high throttle setting and blade speed while still being able to reduce ground speed to increase quality of cut.

Cutting a Lawn for the First Time

Cut grass slightly longer than normal to ensure that the cutting height of the mower does not scalp any uneven ground. However, the cutting height used in the past is generally the best one to use. When cutting grass longer than six inches tall, you may want to cut the lawn twice to ensure an acceptable quality of cut.

Cut 1/3 of the Grass Blade

It is best to cut only about 1/3 of the grass blade. Cutting more than that is not recommended unless grass is sparse, or it is late fall when grass grows more slowly.

Mowing Direction

Alternate mowing direction to keep the grass standing straight. This also helps disperse clippings which enhances decomposition and fertilization.

Mow at Correct Intervals

Normally, mow every four days. But remember, grass grows at different rates at different times. So to maintain the same cutting height, which is a good practice, mow more often in early spring. As the grass growth rate slows in mid summer, mow less frequently. If you cannot mow for an extended period, first mow at a high cutting height; then mow again two days later at a lower height setting.

Avoid Cutting Too Low

If the cutting width of the mower is wider than the mower you previously used, raise the cutting height to ensure that uneven turf is not cut too short.

Long Grass

If the grass is ever allowed to grow slightly longer than normal, or if it contains a high degree of moisture, raise the cutting height higher than usual and cut the grass at this setting. Then cut the grass again using the lower, normal setting.

When Stopping

If the machine's forward motion must be stopped while mowing, a clump of grass clippings may drop onto your lawn. To avoid this, move onto a previously cut area with the blades engaged or you can disengage the mower deck while moving forward.

Keep the Underside of the Mower Clean

Clean clippings and dirt from the underside of the mower after each use. If grass and dirt build up inside the mower, cutting quality will eventually become unsatisfactory.

Blade Maintenance

Maintain a sharp blade throughout the cutting season because a sharp blade cuts cleanly without tearing or shredding the grass blades. Tearing and shredding turns grass brown at the edges, which slows growth and increases the chance of disease. Check the cutter blades daily for sharpness, and for any wear or damage. File down any nicks and sharpen the blades as necessary. If a blade is damaged or worn, replace it immediately with a genuine Toro replacement blade.

Maintenance

Note: Determine the left and right sides of the machine from the normal operating position.

Recommended Maintenance Schedule(s)

Maintenance Service Interval	Maintenance Procedure
After the first 8 hours	• Change the engine oil.
Before each use or daily	• Check the safety interlock system. • Check the engine oil level. • Clean the air intake screen. • Check the cutting blades. • Inspect the grass deflector for damage
After each use	• Clean the mower deck housing.
Every 25 hours	• Grease all lubrication points. • Check tire pressure. • Check the belts for wear/cracks.
Every 100 hours	• Service the paper element. (more often in dusty, dirty conditions) • Change the engine oil. (more often in dusty, dirty conditions) • Check the spark plug(s). • Replace the in-line fuel filter
Every 200 hours	• Replace the paper element. (more often in dusty, dirty conditions) • Change the oil filter. (more often in dusty, dirty conditions)
Before storage	• Charge the battery and disconnect battery cables. • Perform all maintenance procedures listed above before storage. • Paint any chipped surfaces.

Important: **Refer to your engine operator's manual for additional maintenance procedures.**

⚠ CAUTION

If you leave the key in the ignition switch, someone could accidently start the engine and seriously injure you or other bystanders.

Remove the key from the ignition and disconnect the wire from the spark plug before you do any maintenance. Set the wire aside so that it does not accidentally contact the spark plug.

Premaintenance Procedures

Raising the Seat

Make sure the motion control levers are locked in the park position. Lift the seat forward.

The following components can be accessed by raising the seat:

- Serial plate
- Service decal
- Seat adjustment bolts
- Fuel filter
- Battery and battery cables

Lubrication

Greasing the Bearings

Service Interval: Every 25 hours—Grease all lubrication points.

Grease Type: No. 2 General Purpose Lithium Base Grease

1. Park the machine on a level surface and disengage the blade control switch.
2. Move the motion control levers outward to the park position, stop the engine, remove the key, and wait for all moving parts to stop before leaving the operating position.
3. Clean the grease fittings (Figure 28) with a rag. Make sure to scrape any paint off of the front of the fitting(s).

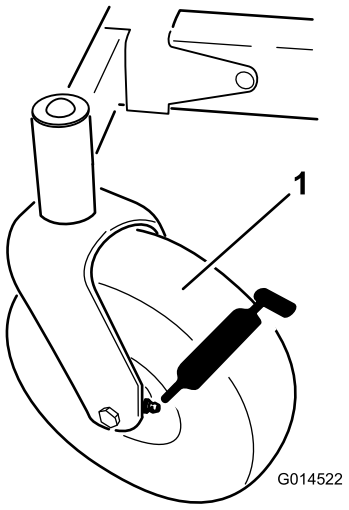

Figure 28

1. Front caster tire

4. Connect a grease gun to each fitting (Figure 28). Pump grease into the fittings until grease begins to ooze out of the bearings.
5. Wipe up any excess grease.

Engine Maintenance

Servicing the Air Cleaner

Note: Service the air cleaner more frequently (every few hours) if operating conditions are extremely dusty or sandy.

Removing the Element

1. Park the machine on a level surface and disengage the blade control (PTO).
2. Move the motion control levers to the brake position, stop the engine, remove the key, and wait for all moving parts to stop before leaving the operating position.
3. Clean around the air cleaner cover to prevent dirt from getting into the engine and causing damage. Lift the cover and remove the hose clamp securing the air cleaner assembly to the engine ().
4. Loosen the hose clamp and remove the paper element ().

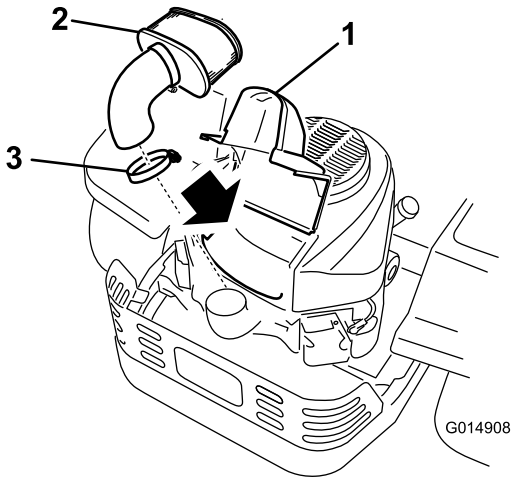

Figure 29

1. Cover
2. Paper element
3. Hose clamp

Cleaning the Element

Service Interval: Every 100 hours—Service the paper element. (more often in dusty, dirty conditions)

Every 200 hours/Yearly (whichever comes first)—Replace the paper element. (more often in dusty, dirty conditions)

1. Lightly tap the element on a flat surface to remove dust and dirt.
2. Inspect the element for tears, an oily film, and damage to the seal.

Important: Never clean the paper element with pressurized air or liquids, such as solvent, gas, or kerosene. Replace the paper element if it is damaged or cannot be cleaned thoroughly.

Servicing the Engine Oil

Oil Type: Detergent oil (API service SF, SG, SH, SJ, or SL)

Crankcase Capacity:with a filter change, 70 ounces (2.1 l); without a filter change, 61 ounces (1.8 l)

Viscosity: See the table below.

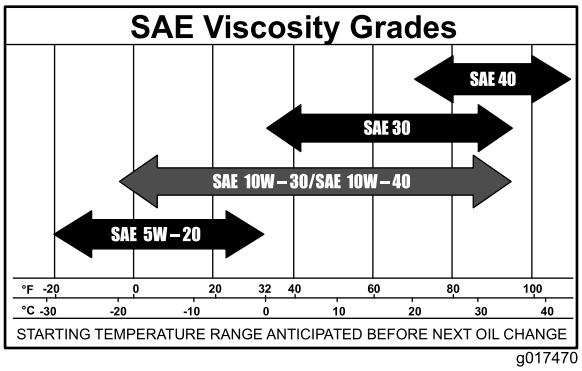

Figure 30

Note: Using multi grade oils (5W-20, 10W-30, and 10W -40) will increase oil consumption. Check oil level more frequently when using them.

Checking the Engine Oil Level

Service Interval: Before each use or daily

Note: Check the oil when the engine is cold.

⚠ WARNING

Contact with hot surfaces may cause personal injury.

Keep hands, feet, face, clothing and other body parts away the muffler and other hot surfaces.

Important: Do not overfill the crankcase with oil because damage to the engine may result. Do not run engine with oil below the low mark because the engine may be damaged.

1. Park the machine on a level surface, disengage the blade control switch, stop the engine, engage parking brake, and remove the key.
2. Make sure the engine is stopped, level, and is cool so the oil has had time to drain into the sump.
3. To keep dirt, grass clippings, etc., out of the engine, clean the area around the oil fill cap/dipstick before removing it.

4. Stop the engine, remove the key, and wait for all moving parts to stop before leaving the operating position ().

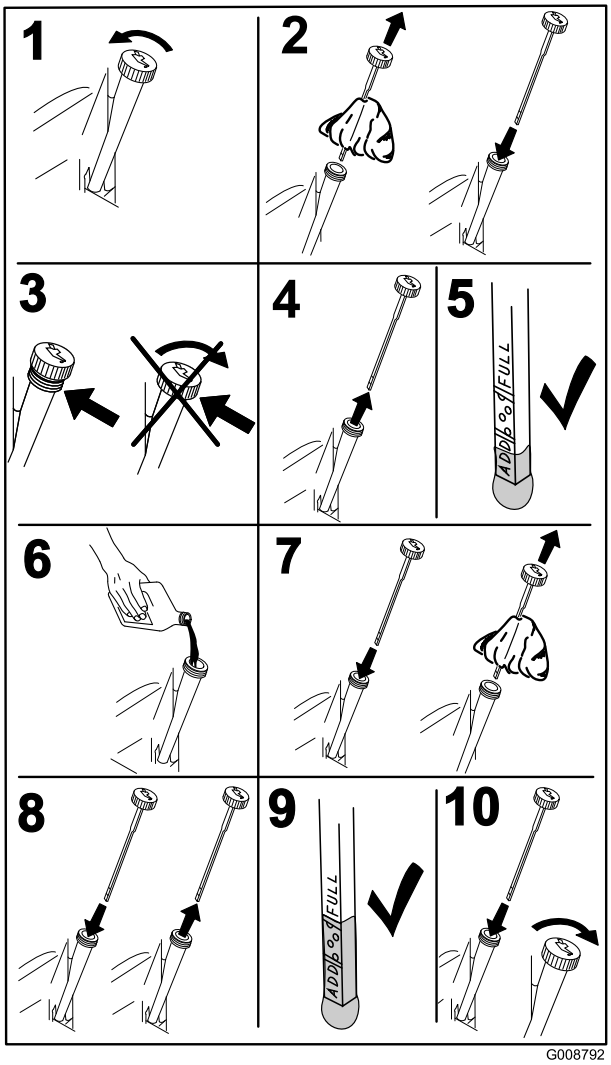

Figure 31

Changing the Engine Oil

Service Interval: After the first 8 hours—Change the engine oil.

Every 100 hours—Change the engine oil. (more often in dusty, dirty conditions)

Note: Dispose of the used oil at a recycling center.

1. Park the machine so that the drain side is slightly lower than the opposite side to assure the oil drains completely.
2. Disengage the PTO, move the motion control levers to the neutral locked position and set the parking brake.
3. Stop the engine, remove the key, and wait for all moving parts to stop before leaving the operating position ().

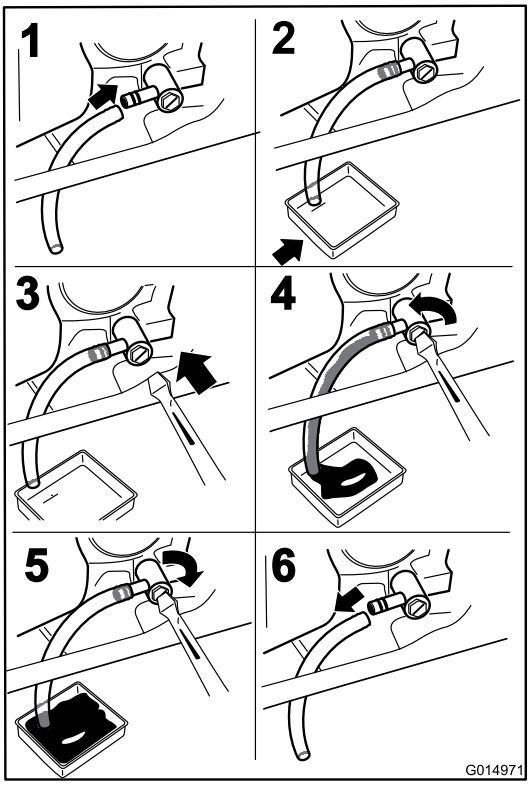

Figure 32

4. Slowly pour approximately 80% of the specified oil into the filler tube and slowly add the additional oil to bring it to the **Full** mark ().

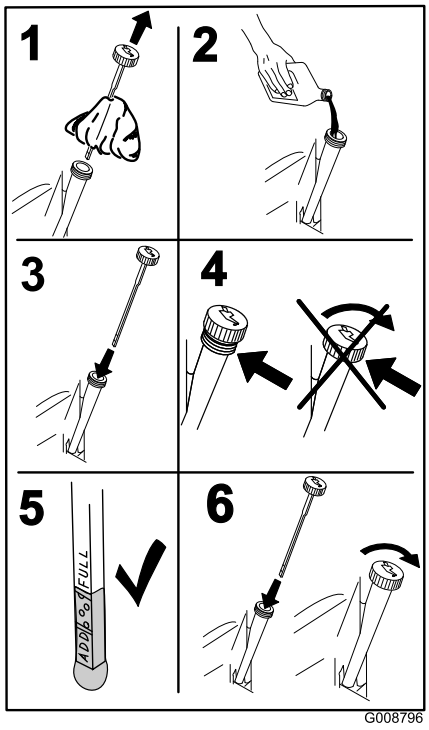

Figure 33

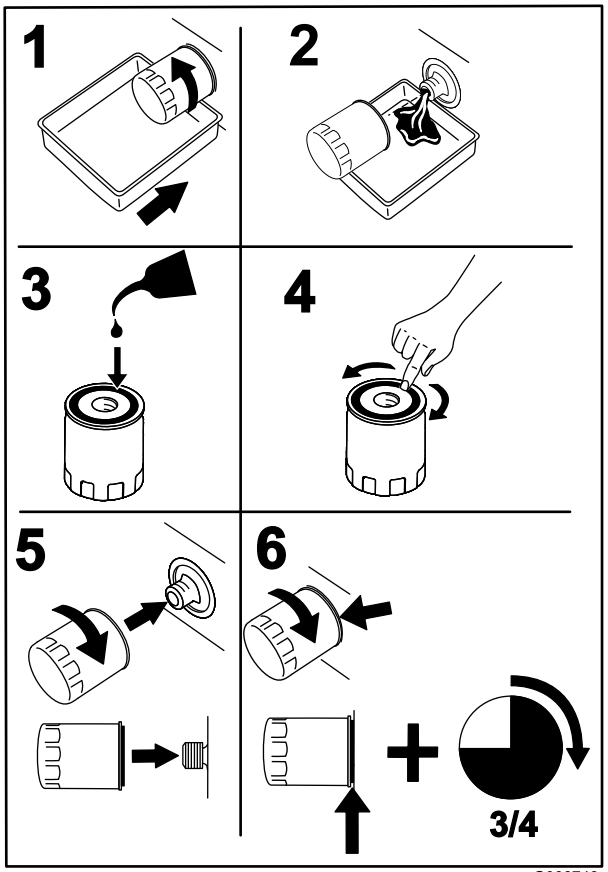

Figure 34

Changing the Engine Oil Filter

Service Interval: Every 200 hours—Change the oil filter. (more often in dusty, dirty conditions)

Note: Change the engine oil filter more frequently when operating conditions are extremely dusty or sandy.

1. Drain the oil from the engine; refer to Changing the Engine Oil.
2. Change the engine oil filter ().

Note: Ensure the oil filter gasket touches the engine and then an extra 3/4 turn is completed.

3. Fill the crankcase with the proper type of new oil; refer to Changing the Oil.

Servicing the Spark Plug

Service Interval: Every 100 hours—Check the spark plug(s).

Make sure the air gap between the center and side electrodes is correct before installing the spark plug. Use a spark plug wrench for removing and installing the spark plug(s) and a gapping tool/feeler gauge to check and adjust the air gap. Install a new spark plug(s) if necessary.

Type: NGK BPR4ES (or equivalent)

Air Gap: 0.030 inch (0.76 mm)

Removing the Spark Plug

1. Disengage the PTO, move the motion control levers to the neutral locked position and set the parking brake.
2. Stop the engine, remove the key, and wait for all moving parts to stop before leaving the operating position.

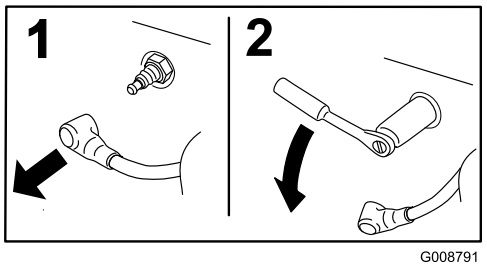

Figure 35

Note: Due to the deep recess around the spark plug, blowing out the cavity with compressed air is usually the most effective method for cleaning. The spark plug is most accessible when the blower housing is removed for cleaning.

Checking the Spark Plug

Important: Never clean the spark plug(s). Always replace the spark plug(s) when it has: a black coating, worn electrodes, an oily film, or cracks.

If you see light brown or gray on the insulator, the engine is operating properly. A black coating on the insulator usually means the air cleaner is dirty.

Set the gap to 0.030 inches (0.76 mm).

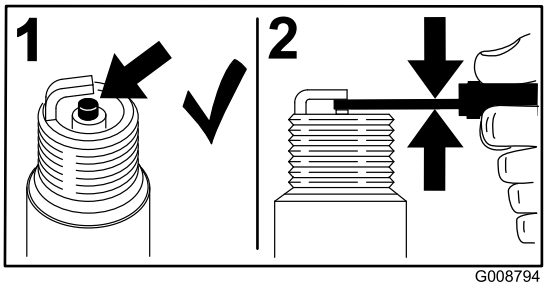

Figure 36

Installing the Spark Plug

Tighten the spark plug(s) to 16 ft-lb (22 N-m).

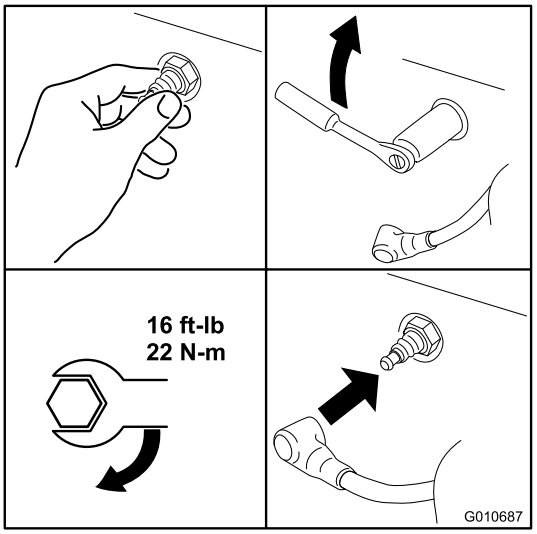

Figure 37

Cleaning the Cooling System

Clean the air intake screen from grass and debris before each use.

1. Disengage the blade control switch and move the control levers to the neutral locked position and apply the parking brake.
2. Stop the engine, remove the key, and wait for all moving parts to stop before leaving the operating position.
3. Remove the air intake screen, air cleaner cover, and fan housing.
4. Clean debris and grass from the parts.
5. Install the air intake screen, air cleaner cover, and fan housing.

Fuel System Maintenance

⚠ DANGER

In certain conditions, gasoline is extremely flammable and highly explosive. A fire or explosion from gasoline can burn you and others and can damage property.

- **Perform any fuel related maintenance when the engine is cold. Do this outdoors in an open area. Wipe up any gasoline that spills.**
- **Never smoke when draining gasoline, and stay away from an open flame or where a spark may ignite the gasoline fumes.**

Replacing the In-line Fuel Filter

Service Interval: Every 100 hours—Replace the in-line fuel filter

Never install a dirty filter if it is removed from the fuel line.

1. Park the machine on a level surface and disengage the blade control switch.
2. Move the motion control levers outward to the park position, stop the engine, remove the key, and wait for all moving parts to stop before leaving the operating position.
3. Locate the fuel filter on the side of the engine as shown in .

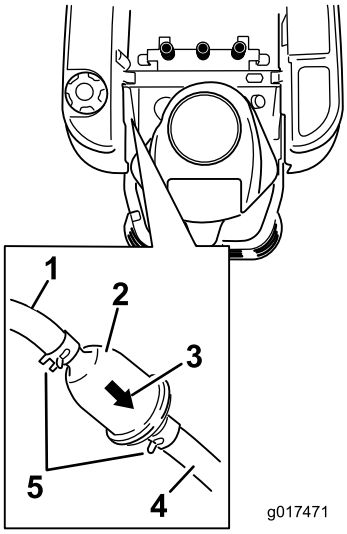

Figure 38

1. Fuel line from tank
2. In-line Fuel filter
3. Flow direction arrow
4. Fuel line to engine
5. Hose clamp

4. Squeeze the ends of the hose clamps together and slide them away from the filter ().
5. Remove the filter from the fuel lines.
6. Install a new filter with the flow direction arrow coming from the fuel tank and pointing to the engine. Move the hose clamps close to the filter () to secure it in place.

Electrical System Maintenance

WARNING

CALIFORNIA
Proposition 65 Warning

Battery posts, terminals, and related accessories contain lead and lead compounds, chemicals known to the State of California to cause cancer and reproductive harm. Wash hands after handling.

Charging the Battery

Removing the Battery

⚠ WARNING

Battery terminals or metal tools could short against metal machine components causing sparks. Sparks can cause the battery gasses to explode, resulting in personal injury.

- **When removing or installing the battery, do not allow the battery terminals to touch any metal parts of the machine.**
- **Do not allow metal tools to short between the battery terminals and metal parts of the machine.**

1. Park the machine on a level surface and disengage the blade control switch.
2. Move the motion control levers outward to the park position, stop the engine, remove the key, and wait for all moving parts to stop before leaving the operating position.
3. Raise the seat to access the battery.
4. Disconnect the negative (black) ground cable from the battery post (). Retain all fasteners.

⚠ WARNING

Incorrect battery cable routing could damage the machine and cables causing sparks. Sparks can cause the battery gasses to explode, resulting in personal injury.

- **Always disconnect the negative (black) battery cable before disconnecting the positive (red) cable.**
- **Always connect the positive (red) battery cable before connecting the negative (black) cable.**

5. Slide the rubber cover up the positive (red) cable. Disconnect the positive (red) cable from the battery post (). Retain all fasteners.
6. Remove the battery hold-down () and lift the battery from the battery tray.

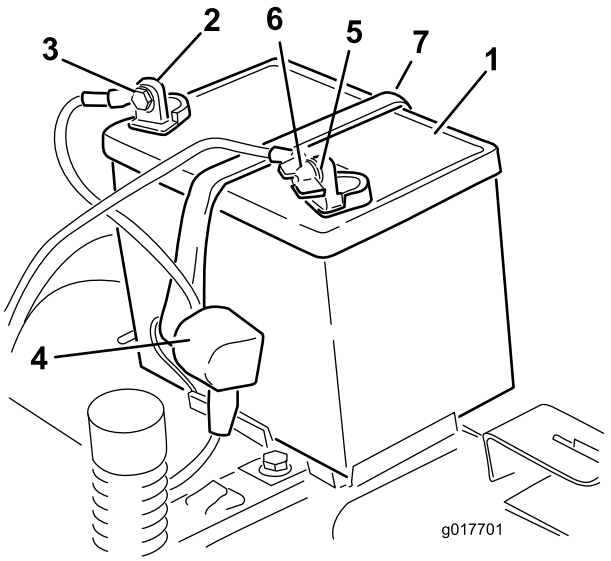

Figure 39

1. Battery
2. Positive battery post
3. Bolt, washer, and nut
4. Terminal boot
5. Negative battery post
6. Wing nut, washer, and bolt
7. Battery hold-down

Charging the Battery

Service Interval: Before storage—Charge the battery and disconnect battery cables.

1. Remove the battery from the chassis; refer to Removing the Battery.
2. Charge the battery for a minimum of 1 hour at 6 to 10 amps. Do not overcharge the battery.
3. When the battery is fully charged, unplug the charger from the electrical outlet, then disconnect the charger leads from the battery posts ().

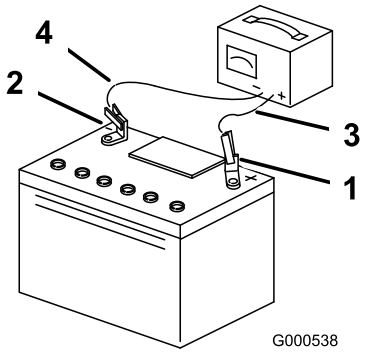

Figure 40

1. Positive battery post
2. Negative battery post
3. Red (+) charger lead
4. Black (-) charger lead

Note: Do not run the machine with the battery disconnected, electrical damage may occur.

Installing the Battery

1. Position the battery in the tray ().
2. Install the positive (red) battery cable to the positive (+) battery terminal using the fasteners removed previously.
3. Install the negative battery cable to the negative (-) battery terminal using the fasteners removed previously.
4. Slide the red terminal boot onto the positive (red) battery post.
5. Secure the battery with the hold-down ().
6. Lower the seat.

Servicing the Fuses

The electrical system is protected by fuses. It requires no maintenance; however, if a fuse blows, check the component/circuit for a malfunction or short.

Fuse:

- Main F1-30 amp, blade-type
- Charge Circuit F2-25 amp, blade-type

1. Remove the screws securing the control panel to the machine. Retain all fasteners
2. Lift the control pane up to access the main wiring harness and fuse block ().
3. To replace a fuse, pull out on the fuse to remove it ().

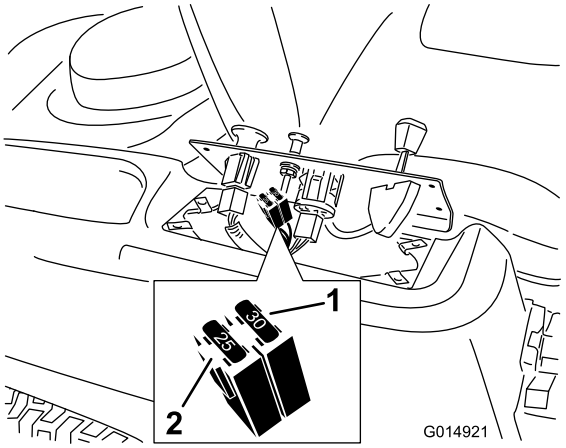

Figure 41

1. Main-30 amp
2. Charge circuit-25 amp

4. Return the control panel to its original position. Use the screws removed previously to secure the panel to the machine.

Drive System Maintenance

Checking the Tire Pressure

Service Interval: Every 25 hours—Check tire pressure.

Maintain the air pressure in the front and rear tires as specified. Uneven tire pressure can cause uneven cut. Check the pressure at the valve stem (). Check the tires when they are cold to get the most accurate pressure reading.

Refer to the maximum pressure suggested by the tire manufacturer on the sidewall of the caster wheel tires.

Inflate the rear drive wheel tires to 12 psi.

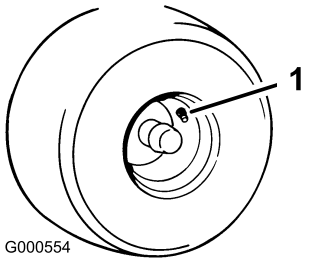

Figure 42

1. Valve stem

Releasing the Electric Brake

The electric brake can be release by manually rotating the link arms forward. Once the electric brake is energized the brake will reset.

To release the brake:

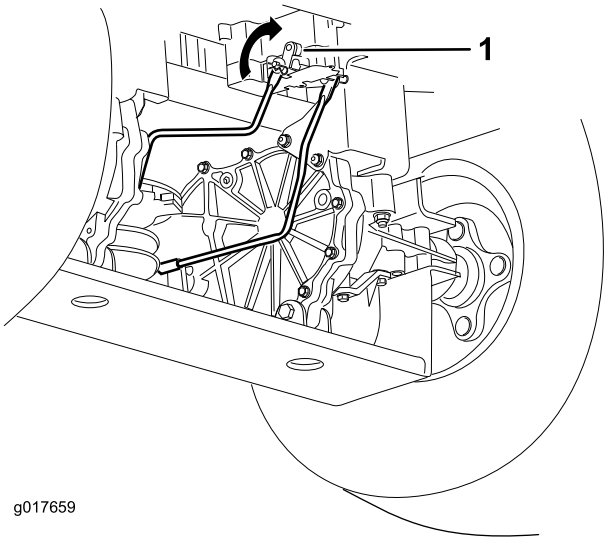

Figure 43

1. Brake link arm on the electric brake control module

1. Locate the shaft on the electric brake where the brake link arms are connected.
2. Rotate the shaft forward to release the brake.

Mower Maintenance

Servicing the Cutting Blades

Maintain sharp blades throughout the cutting season because sharp blades cut cleanly without tearing or shredding the grass blades. Tearing and shredding turns grass brown at the edges, which slows growth and increases the chance of disease.

Check the cutter blades daily for sharpness, and for any wear or damage. File down any nicks and sharpen the blades as necessary. If a blade is damaged or worn, replace it immediately with a genuine Toro replacement blade. For convenient sharpening and replacement, you may want to keep extra blades on hand.

⚠ WARNING

A worn or damaged blade can break, and a piece of the blade could be thrown into the operator's or bystander's area, resulting in serious personal injury or death.

- **Inspect the blade periodically for wear or damage.**
- **Replace a worn or damaged blade.**

Before Inspecting or Servicing the Blades

Park the machine on a level surface, disengage the blade control switch, and move the motion control levers outward to the park position. Stop the engine and remove the key.

Inspecting the Blades

Service Interval: Before each use or daily—Check the cutting blades.

1. Inspect the cutting edges (). If the edges are not sharp or have nicks, remove and sharpen the blades; refer to Sharpening the Blades.
2. Inspect the blades, especially the curved area (). If you notice any damage, wear, or a slot forming in this area (item 3 in), immediately install a new blade.

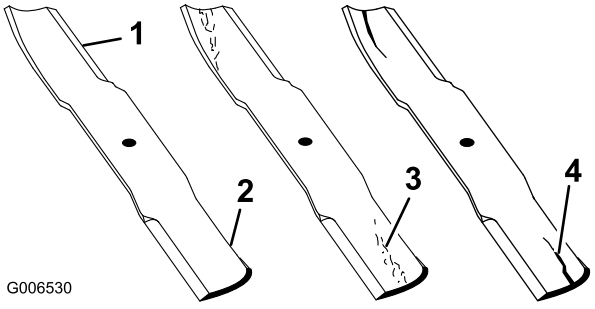

Figure 44

1. Cutting edge
2. Curved area
3. Wear/slot forming
4. Damage

Checking for Bent Blades

Note: The machine must be on a level surface for the following procedure.

1. Raise the mower deck to the highest height-of-cut position; also considered the 'transport' position.
2. While wearing thickly padded gloves or other adequate hand protection slowly rotate blade to be measured into a position that allows effective measurement of the distance between the cutting edge and the level surface the machine is on.

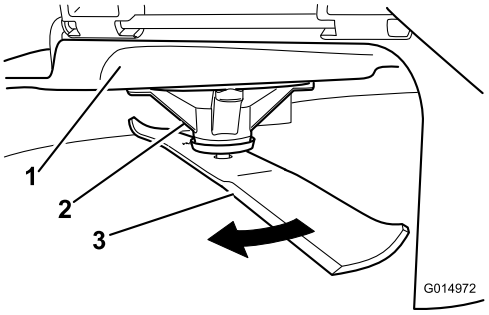

Figure 45

1. Deck
2. Spindle housing
3. Blade

3. Measure from the tip of the blade to the flat surface here.

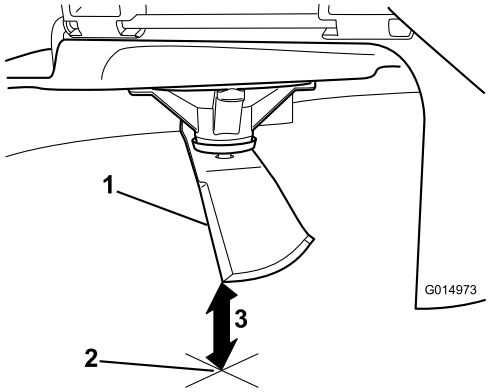

Figure 46

1. Blade, in position for measuring
2. Level surface
3. Measured distance between blade and surface (A)

4. Rotate the same blade 180 degrees so that the opposing cutting edge is now in the same position.

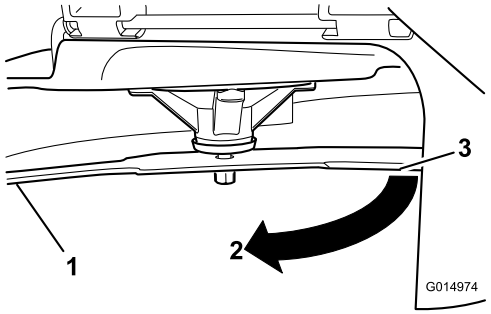

Figure 47

1. Blade, side previously measured
2. Measurement position used previously
3. Opposing side of blade being moved into measurement position

5. Measure from the tip of the blade to the flat surface here. The variance should be no more than 1/8 inch (3mm).

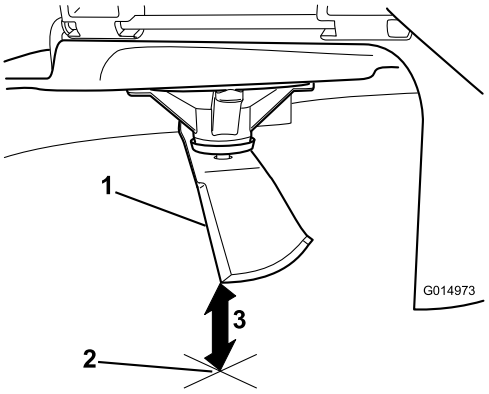

Figure 48

1. Opposing blade edge, in position for measuring
2. Level surface
3. Second measured distance between blade and surface (B)

⚠ WARNING

A blade that is bent or damaged could break apart and could seriously injure or kill you or bystanders.

- **Always replace bent or damaged blade with a new blade.**
- **Never file or create sharp notches in the edges or surfaces of blade.**

A. If the difference between A and B is greater than 1/8 inch (3mm) replace the blade with a new blade. Refer to Removing the Blades and Installing the Blades.

Note: If a bent blade is replaced with a new one and the dimension obtained continues to exceed 1/8 inch (3mm), the blade spindle could be bent. Contact an Authorized Toro Dealer for service.

B. If the variance is within constraints, move to the next blade.

Repeat this procedure on each blade.

Removing the Blades

The blades must be replaced if a solid object is hit, if the blade is out of balance, or the blade is bent. To ensure optimum performance and continued safety conformance of the machine, use genuine Toro replacement blades. Replacement blades made by other manufacturers may result in non-conformance with safety standards.

Hold the blade end using a rag or thickly-padded glove. Remove the blade bolt, curved washer, blade stiffener, and blade from the spindle shaft ().

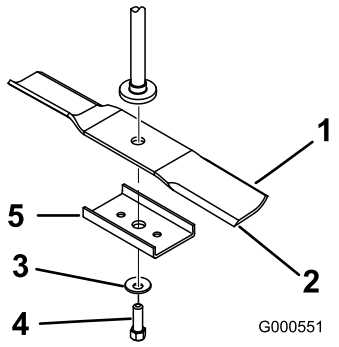

Figure 49

1. Sail area of blade
2. Blade
3. Curved washer
4. Blade bolt
5. Blade stiffener

Sharpening the Blades

1. Use a file to sharpen the cutting edge at both ends of the blade (). Maintain the original angle. The blade retains its balance if the same amount of material is removed from both cutting edges.

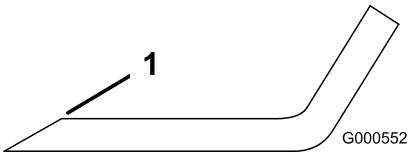

Figure 50

1. Sharpen at original angle

2. Check the balance of the blade by putting it on a blade balancer (). If the blade stays in a horizontal position, the blade is balanced and can be used. If the blade is not balanced, file some metal off the end of the sail area only (). Repeat this procedure until the blade is balanced.

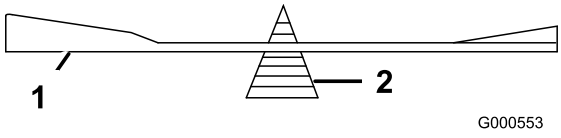

Figure 51

1. Blade
2. Balancer

Installing the Blades

1. Install the blade onto the spindle shaft ().

   Important: The curved part of the blade must be pointing upward toward the inside of the mower to ensure proper cutting.

2. Install the blade stiffener, the curved washer (cupped side toward the blade) and the blade bolt ().
3. Torque the blade bolt to 35-65 ft-lb (47-88 N-m).

Leveling the Mower Deck

Check to ensure the mower deck is level any time you install the mower or when you see an uneven cut on your lawn.

The mower deck must be checked for bent blades prior to leveling; any bent blades must be removed and replaced. Refer to the Checking for Bent Blades procedure before continuing.

The mower deck must be leveled side-to-side first then the front to rear slope can be adjusted.

Requirements:

- The machine must be on a level surface.
- All four tire must be properly inflated. Refer to Checking the Tire Pressure in the Drive System Maintenance section.

Leveling the Mower from Side-to-Side

The mower blades must be level from side to side. Check the side-to-side level any time you install the mower or when you see an uneven cut on your lawn.

1. Park the machine on a level surface and disengage the blade control switch.
2. Move the motion control levers outward to the park position, stop the engine, remove the key, and wait for all moving parts to stop before leaving the operating position.
3. Check the air pressure of all four tires. If needed, adjust to the recommended inflation; refer to Checking the Tire Pressure in the Drive System Maintenance section.
4. Set the height-of-cut lever to the 3 inch (76 mm) position.
5. Carefully rotate the blade(s) side to side (). Measure between the outside cutting edges and the flat surface (). If both measurements are not within 3/16 inch (5 mm), an adjustment is required; continue with this procedure.

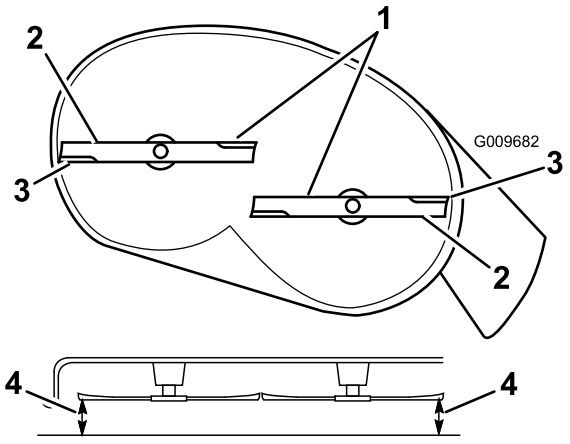

Figure 52

1. Blades side to side
2. Sail area of blade
3. Outside cutting edges
4. Measure here

6. Move to the left side of the machine. Loosen, but do not remove, the rear locking nut on the hanger bracket ().
7. Loosen the side locking nut on the hanger bracket just enough to allow the eccentric plate to be adjusted (). Use a 3/8 inch drive extension on a socket wrench to manipulate the eccentric plate. Use the wrench to reposition the height of the mower deck and adjust it so the measurements taken in Step are with in 3/16 inch (5 mm).
8. Stop the deck at the adjusted position and tighten the side locking nut on the hanger bracket to hold the new position (). Tighten the rear locking nut on the hanger bracket.
9. Continue leveling the deck by checking the front-to-rear blade slope; refer to Adjusting the Front-to-Rear Blade Slope.

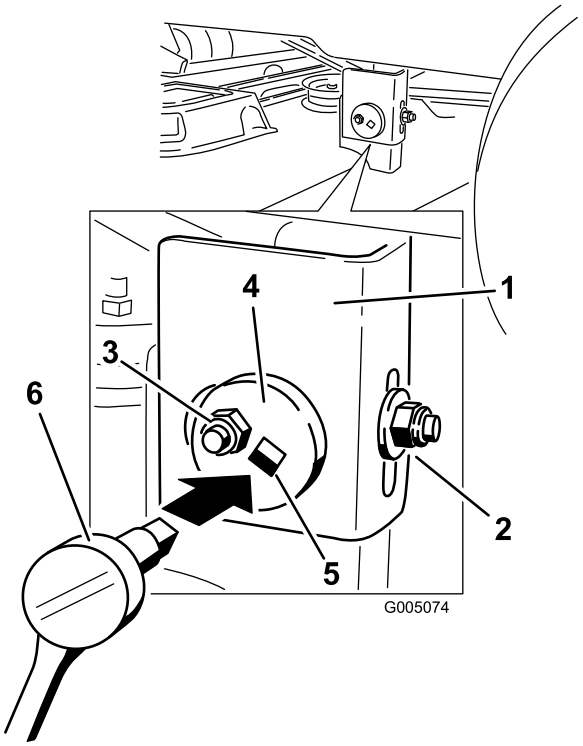

Figure 53

1. Hanger bracket
2. Rear locking nut
3. Side locking nut
4. Eccentric adjustment plate
5. Socket wrench hole
6. Socket wrench with 3/8 inch extension

Adjusting the Front-to-Rear Blade Slope

Check the front-to-rear blade level any time you install the mower. If the front of the mower is more than 5/16 inch (7.9 mm) lower than the rear of the mower, adjust the blade level using the following instructions:

1. Park the machine on a level surface and disengage the blade control switch.
2. Move the motion control levers outward to the park position, stop the engine, remove the key, and wait for all moving parts to stop before leaving the operating position.
3. Set the height-of-cut lever to middle position.

   Note: Check and adjust the side-to-side blade level. If you have not checked the setting; refer to Side-to-Side Leveling.
4. Carefully rotate the blades so they are facing front to rear ().

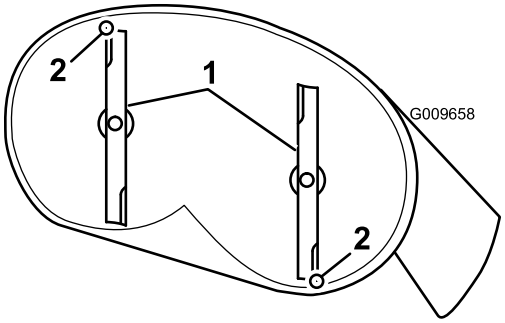

Figure 54

1. Blades front to rear
2. Measure from the tip of the blade to the flat surface here

5. Measure from the tip of the front blade to the flat surface and the tip of the rear blade to the flat surface (). If the front blade tip is not 1/16-5/16 inch (1.6-7.9 mm) lower than the rear blade tip, adjust the front locknut.
6. To adjust the front-to-rear blade slope, rotate the adjustment nut in the front of the mower ().

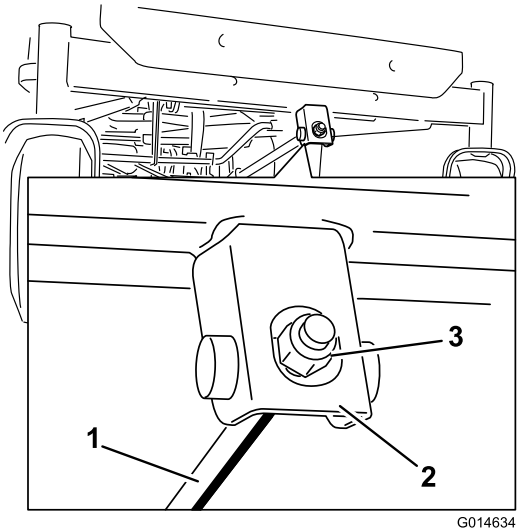

Figure 55

1. Adjusting rod
2. Adjusting block
3. Lock nut

7. To raise the front of the mower, tighten the adjustment nut. To lower the front of the mower, loosen the adjustment nut.
8. After adjustment, check the front-to-rear slope again. Continue adjusting the nut until the front blade tip is 1/16-5/16 inch (1.6-7.9 mm) lower than the rear blade tip ().
9. When the front-to-rear blade slope is correct check the side-to-side level of the mower again; refer to Leveling the Mower from Side-to-Side.

Removing the Mower

1. Park the machine on a level surface and disengage the blade control switch.
2. Move the motion control levers outward to the park position, stop the engine, remove the key, and wait for all moving parts to stop before leaving the operating position.
3. Lower the height-of-cut lever to the lowest position.
4. Remove the hairpin cotter from the front support rod and remove the rod from the deck bracket (). Carefully lower the front of the mower deck to the ground.

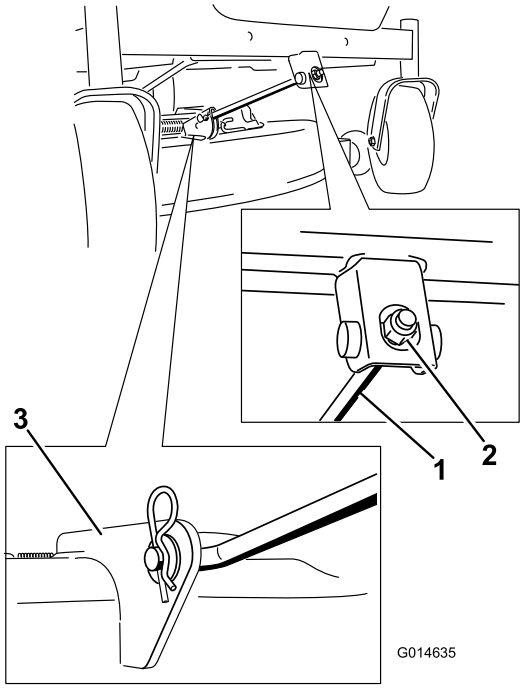

Figure 56

1. Front support rod
2. Locking nut
3. Deck bracket

5. Using the mower deck handles, lift the mower deck and hanger brackets clear of the rear lift rod and lower the mower carefully to the ground (and).

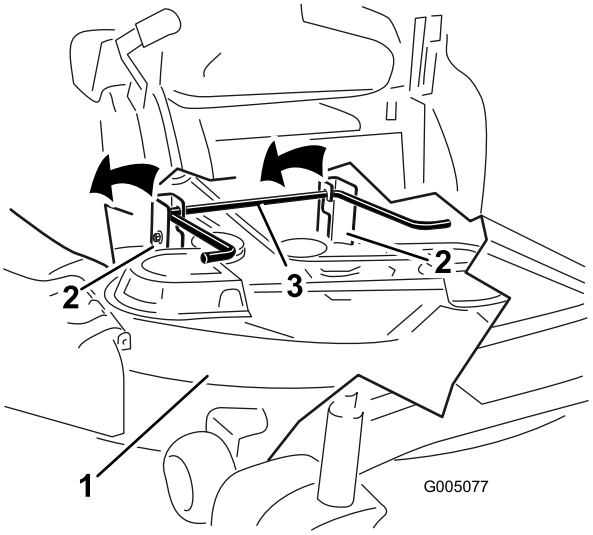

Figure 57

1. Mower deck
2. Hanger bracket
3. Rear lift rod

6. Slide the mower deck rearward to remove the mower belt from the engine pulley.
7. Slide the mower deck out from underneath the machine.

Note: Retain all parts for future installation.

Mower Belt Maintenance

Inspecting the Belts

Service Interval: Every 25 hours—Check the belts for wear/cracks.

Check the belts for cracks, frayed edges, burn marks, or any other damage. Replace damaged belts.

Replacing the Mower Belt

Squealing when the belt is rotating, blades slipping when cutting grass, frayed belt edges, burn marks, and cracks are signs of a worn mower belt. Replace the mower belt if any of these conditions are evident.

1. Park the machine on a level surface and disengage the blade control switch.
2. Move the motion control levers outward to the park position, stop the engine, remove the key, and wait for all moving parts to stop before leaving the operating position.
3. Set the height-of-cut at the lowest cutting position [1-1/2 inch (38 mm)].
4. Using a spring removal tool, (Toro part no. 92-5771), remove the idler spring from the deck hook to remove tension on the idler pulley and roll the belt off of the pulleys ().

⚠ WARNING

The spring is under tension when installed and can cause personal injury.

Be careful when removing the belt.

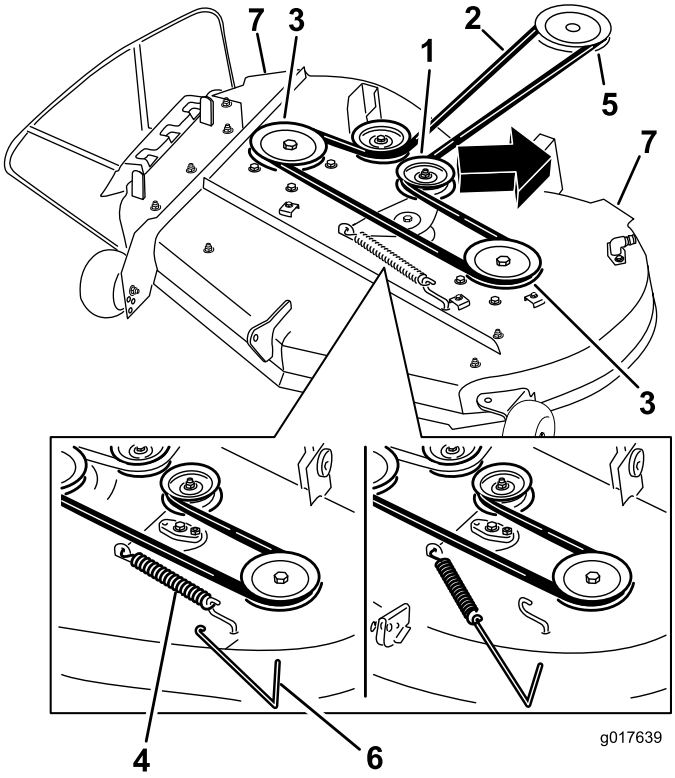

Figure 58

1. Idler pulley
2. Mower belt
3. Outside pulley
4. Spring
5. Engine pulley
6. Spring removal too
7. Mower deck handles

5. Route the new belt around the engine pulley and mower pulleys ().
6. Using a spring removal tool, (Toro part no. 92-5771), install the idler spring over the deck hook and placing tension on the idler pulley and mower belt ().

Installing the Mower

1. Park the machine on a level surface and disengage the blade control switch.
2. Move the motion control levers outward to the park position, stop the engine, remove the key, and wait for all moving parts to stop before leaving the operating position.
3. Slide the mower under the machine.
4. Lower the height-of-cut lever to the lowest position.
5. Lift the rear of the mower deck and guide the hanger brackets over the rear lift rod ().
6. Attach the front support rod to the mower deck with the clevis pin and hairpin cotter ().
7. Install the mower belt onto the engine pulley; refer to Replacing the Mower Belt.

Replacing the Grass Deflector

Service Interval: Before each use or daily—Inspect the grass deflector for damage

⚠ WARNING

An uncovered discharge opening could allow the lawn mower to throw objects in the operator's or bystander's direction and result in serious injury. Also, contact with the blade could occur.

Never operate the lawn mower unless you install a mulch plate, discharge deflector, or grass collection system.

Inspect the grass deflector for damage before each use. Replace any damaged parts before use.

1. Disengage the spring from the notch in the deflector bracket and slide the rod out of the welded deck brackets, spring, and discharge deflector (). Remove the damaged or worn discharge deflector.

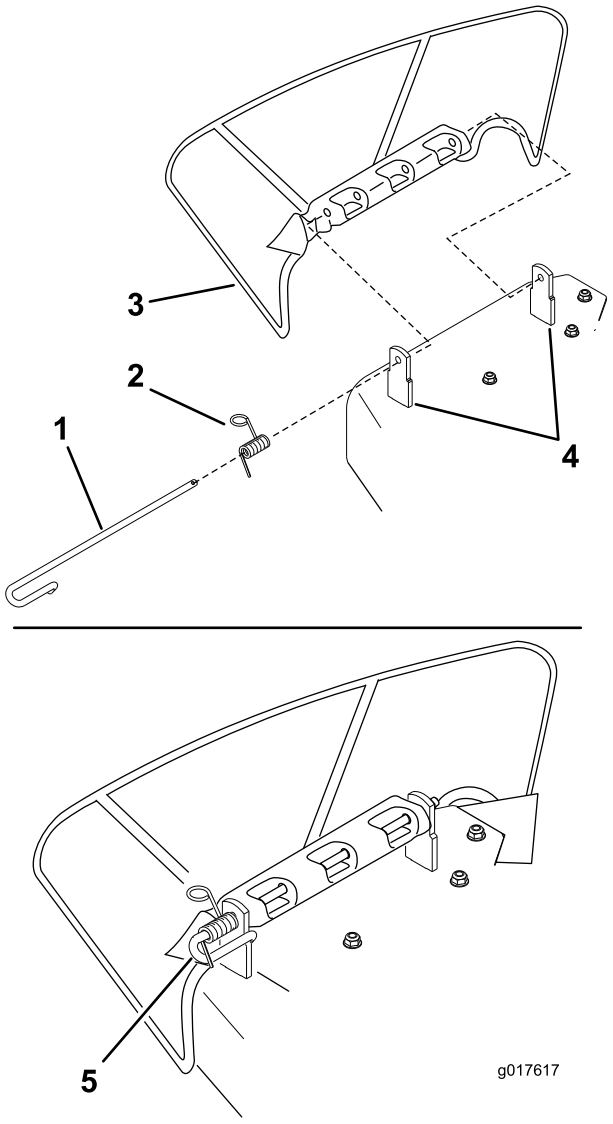

Figure 59

1. Rod
2. Spring
3. Deflector
4. Deck brackets
5. Spring installed over the rod

2. Position the new discharge deflector with the bracket ends between the welded brackets on the deck as shown in .
3. Install the spring onto the straight end of the rod. Position the spring on the rod as shown in so the shorter spring end is coming from under the rod before the bend and going over the rod as it returns from the bend.
4. Lift the loop end of the spring and place it into the notch on the deflector bracket ().

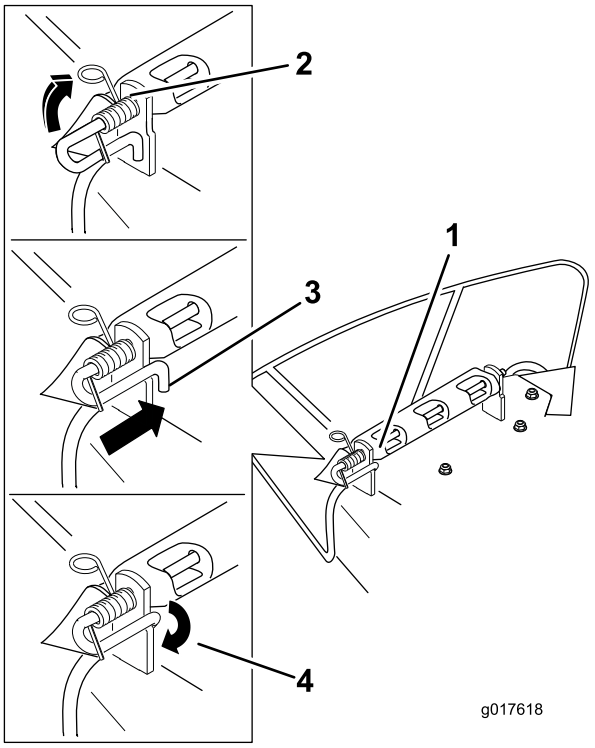

Figure 60

1. Rod and spring assembly installed
2. Loop end of the spring installed into the notch in the deflector bracket
3. Rod, short end, moved behind mower bracket
4. Short end, retained by mower bracket.

5. Secure the rod and spring assembly by twisting it so the short end of the rod can be placed behind the front bracket welded to the deck ().

Important: The grass deflector must be spring loaded in the down position. Lift the deflector up to test that it snaps to the full down position.

Cleaning

Washing the Underside of the Mower

Service Interval: After each use—Clean the mower deck housing.

Wash the underside of the mower after each use to prevent grass buildup for improved mulch action and clipping dispersal.

1. Park the machine on a level surface and disengage the blade control switch.
2. Move the motion control levers outward to the park position, stop the engine, remove the key, and wait for all moving parts to stop before leaving the operating position.
3. Attach the hose coupling to the end of the mower washout fitting, and turn the water on high ().

   Note: Spread petroleum jelly on the washout fitting O-ring to make the coupling slide on easier and protect the O-ring.

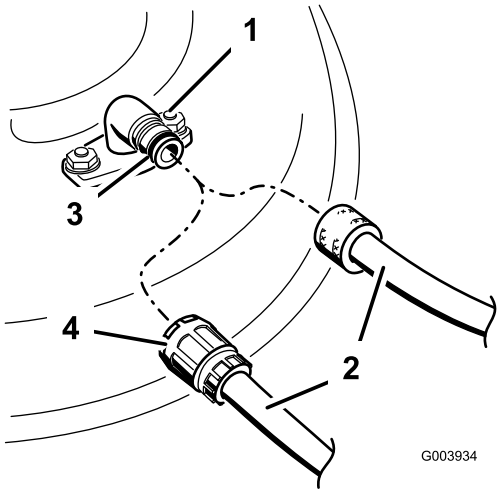

Figure 61

1. Washout fitting
2. Hose
3. O-ring
4. Coupling

4. Lower the mower to the lowest height-of-cut.
5. Sit on the seat and start the engine. Engage the blade control switch and let the mower run for one to three minutes.
6. Disengage the blade control switch, stop the engine, and remove the ignition key. Wait for all moving parts to stop.
7. Turn the water off and remove the coupling from the washout fitting.

   Note: If the mower is not clean after one washing, soak it and let it stand for 30 minutes. Then repeat the process.

8. Run the mower again for one to three minutes to remove excess water.

⚠ WARNING

A broken or missing washout fitting could expose you and others to thrown objects or blade contact. Contact with blade or thrown debris can cause injury or death.

- **Replace broken or missing washout fitting immediately, before using mower again.**
- **Never put your hands or feet under the mower or through openings in the mower.**

Storage

Cleaning and Storage

1. Disengage the blade control switch, move the motion controls outward to the park position, stop the engine, and remove the key.
2. Remove grass clippings, dirt, and grime from the external parts of the entire machine, especially the engine. Clean dirt and chaff from the outside of the engine cylinder head fins and blower housing.

   Important: You can wash the machine with mild detergent and water. Do not pressure wash the machine. Avoid excessive use of water, especially near the control panel, under the seat, around the engine, hydraulic pumps, and motors.
3. Service the air cleaner; refer to Servicing the Air Cleaner in the Engine Maintenance section.
4. Grease and oil the machine; refer to the Lubrication section.
5. Change the crankcase oil and filter; refer to Servicing the Engine Oil in the Engine Maintenance section.
6. Check the tire pressure; refer to Checking the Tire Pressure in the Drive System Maintenance section.
7. Charge the battery; refer to Servicing the Battery in the Electrical System Maintenance section.
8. Check the condition of the blades; refer to Servicing the Cutting Blades in the Mower Maintenance section.
9. Prepare the machine for storage when non-use occurs over 30 days. Prepare the machine for storage as follows.
10. Add a petroleum based stabilizer/conditioner to the fuel in the tank. Follow the mixing instructions from the stabilizer manufacturer. Do not use an alcohol based stabilizer (ethanol or methanol).

    Note: A fuel stabilizer/conditioner is most effective when mixed with fresh gasoline and used at all times.

    Run the engine to distribute the conditioned fuel through the fuel system (5 minutes).

    Important: Do not store stabilizer/conditioned gasoline over 90 days.
11. Remove the spark plug(s) and check its condition; refer to Servicing the Spark Plug in the Engine Maintenance section. With the spark plug(s) removed from the engine, pour two tablespoons of engine oil into the spark plug hole. Use the starter to crank the engine and distribute the oil inside the cylinder. Install the spark plug(s). Do not install the wire on the spark plug(s).
12. Clean any dirt and chaff from the top of the mower.
13. Scrape any heavy buildup of grass and dirt from the underside of the mower, then wash the mower with a garden hose.
14. Check the condition of the drive and mower belts.
15. Check and tighten all bolts, nuts, and screws. Repair or replace any part that is worn or damaged.
16. Paint all scratched or bare metal surfaces. Paint is available from your Authorized Service Dealer.
17. Store the machine in a clean, dry garage or storage area. Remove the key from the ignition switch and keep it in a memorable place. Cover the machine to protect it and keep it clean.

Troubleshooting

Problem	Possible Cause	Corrective Action
The engine overheats.	1. The engine load is excessive. 2. The oil level in the crankcase is low. 3. The cooling fins and air passages under the engine blower housing are plugged. 4. The air cleaner is dirty. 5. Dirt, water, or stale fuel is in fuel system.	1. Reduce ground speed. 2. Add oil to the crankcase. 3. Remove the obstruction from the cooling fins and air passages. 4. Clean or replace the air cleaner element. 5. Contact an Authorized Service Dealer
The starter does not crank	1. The blade control switch is engaged. 2. The motion control levers are not in the park position. 3. The battery is dead. 4. The electrical connections are corroded or loose. 5. A fuse is blown. 6. A relay or switch is damaged.	1. Move the blade control switch to Disengaged. 2. Move the motion control levers outward to the park position. 3. Charge the battery. 4. Check the electrical connections for good contact. 5. Replace the fuse. 6. Contact an Authorized Service Dealer.
The engine will not start, starts hard, or fails to keep running.	1. The fuel tank is empty. 2. The choke is not on. 3. The air cleaner is dirty. 4. The spark plug wire(s) is loose or disconnected. 5. The spark plug(s) is pitted, fouled, or the gap is incorrect. 6. There is dirt in fuel filter. 7. Dirt, water, or stale fuel is in fuel system. 8. There is incorrect fuel in the fuel tank. 9. The oil level in the crankcase is low.	1. Fill the fuel tank. 2. Move the choke lever to On. 3. Clean or replace the air cleaner element. 4. Install the wire(s) on the spark plug. 5. Install a new, correctly gapped spark plug(s). 6. Replace the fuel filter. 7. Contact an Authorized Service Dealer. 8. Drain the tank and replace the fuel with the proper type. 9. Add oil to the crankcase.
The engine loses power.	1. The engine load is excessive. 2. The air cleaner is dirty. 3. The oil level in the crankcase is low. 4. The cooling fins and air passages under the engine blower housing are plugged. 5. The spark plug(s) is pitted, fouled, or the gap is incorrect. 6. The fuel tank vent is blocked. 7. There is dirt in the fuel filter. 8. Dirt, water, or stale fuel is in the fuel system. 9. There is incorrect fuel in the fuel tank.	1. Reduce ground speed. 2. Clean the air cleaner element. 3. Add oil to the crankcase. 4. Remove the obstruction from the cooling fins and air passages. 5. Install a new, correctly gapped spark plug(s). 6. Contact an Authorized Service Dealer. 7. Replace the fuel filter. 8. Contact an Authorized Service Dealer. 9. Drain the tank and replace the fuel with the proper type.
The machine does not drive.	1. The bypass valves are open. 2. The traction belts are worn, loose, or broken. 3. The traction belts are off of the pulleys. 4. The transmission has failed.	1. Close the tow valves. 2. Contact an Authorized Service Dealer. 3. Contact an Authorized Service Dealer. 4. Contact an Authorized Service Dealer.

Problem	Possible Cause	Corrective Action
There is abnormal vibration.	1. The engine mounting bolts are loose.	1. Tighten the engine mounting bolts.
	2. The engine pulley, idler pulley, or blade pulley is loose.	2. Tighten the appropriate pulley.
	3. The engine pulley is damaged.	3. Contact an Authorized Service Dealer.
	4. The cutting blade(s) is/are bent or unbalanced.	4. Install a new cutting blade(s).
	5. A blade mounting bolt is loose.	5. Tighten the blade mounting bolt.
	6. A blade spindle is bent.	6. Contact an Authorized Service Dealer.
Uneven cutting height.	1. The blade(s) is not sharp.	1. Sharpen the blade(s).
	2. A cutting blade(s) is/are bent.	2. Install a new cutting blade(s).
	3. The mower is not level.	3. Level the mower from side-to-side and front-to-rear.
	4. An anti-scalp wheel is not set correctly.	4. Adjust the anti-scalp wheel height.
	5. The underside of the mower is dirty.	5. Clean the underside of the mower.
	6. The tire pressure is incorrect.	6. Adjust the tire pressure.
	7. A blade spindle is bent.	7. Contact an Authorized Service Dealer.
The blades do not rotate.	1. The drive belt is worn, loose or broken.	1. Install a new drive belt.
	2. The drive belt is off of the pulley.	2. Install the drive belt and check the adjusting shafts and belt guides for the correct position.
	3. The Power Take-Off (PTO) switch or PTO clutch is faulty.	3. Contact an Authorized Service Dealer.
	4. The mower belt is worn, loose, or broken.	4. Install a new mower belt.

Notes:

International Distributor List

Distributor:	Country:	Phone Number:	Distributor:	Country:	Phone Number:
Atlantis Su ve Sulama Sisstemleri Lt	Turkey	90 216 344 86 74	Maquiver S.A.	Colombia	57 1 236 4079
Balama Prima Engineering Equip.	Hong Kong	852 2155 2163	Maruyama Mfg. Co. Inc.	Japan	81 3 3252 2285
B-Ray Corporation	Korea	82 32 551 2076	Agrolanc Kft	Hungary	36 27 539 640
Casco Sales Company	Puerto Rico	787 788 8383	Mountfield a.s.	Czech Republic	420 255 704 220
Ceres S.A.	Costa Rica	506 239 1138	Munditol S.A.	Argentina	54 11 4 821 9999
CSSC Turf Equipment (pvt) Ltd.	Sri Lanka	94 11 2746100	Oslinger Turf Equipment SA	Ecuador	593 4 239 6970
Cyril Johnston & Co.	Northern Ireland	44 2890 813 121	Oy Hako Ground and Garden Ab	Finland	358 987 00733
Equiver	Mexico	52 55 539 95444	Parkland Products Ltd.	New Zealand	64 3 34 93760
Femco S.A.	Guatemala	502 442 3277	Prato Verde S.p.A.	Italy	39 049 9128 128
G.Y.K. Company Ltd.	Japan	81 726 325 861	Prochaska & Cie	Austria	43 1 278 5100
Geomechaniki of Athens	Greece	30 10 935 0054	RT Cohen 2004 Ltd.	Israel	972 986 17979
Guandong Golden Star	China	86 20 876 51338	Riversa	Spain	34 9 52 83 7500
Hako Ground and Garden	Sweden	46 35 10 0000	Sc Svend Carlsen A/S	Denmark	45 66 109 200
Hako Ground and Garden	Norway	47 22 90 7760	Solvert S.A.S.	France	33 1 30 81 77 00
Hayter Limited (U.K.)	United Kingdom	44 1279 723 444	Spypros Stavrinides Limited	Cyprus	357 22 434131
Hydroturf Int. Co Dubai	United Arab Emirates	97 14 347 9479	Surge Systems India Limited	India	91 1 292299901
Hydroturf Egypt LLC	Egypt	202 519 4308	T-Markt Logistics Ltd.	Hungary	36 26 525 500
Irriamc	Portugal	351 21 238 8260	Toro Australia	Australia	61 3 9580 7355
Irrigation Products Int'l Pvt Ltd.	India	86 22 83960789	Toro Europe NV	Belgium	32 14 562 960
Jean Heybroek b.v.	Netherlands	31 30 639 4611			

European Privacy Notice

The Information Toro Collects
Toro Warranty Company (Toro) respects your privacy. In order to process your warranty claim and contact you in the event of a product recall, we ask you to share certain personal information with us, either directly or through your local Toro company or dealer.

The Toro warranty system is hosted on servers located within the United States where privacy law may not provide the same protection as applies in your country.

BY SHARING YOUR PERSONAL INFORMATION WITH US, YOU ARE CONSENTING TO THE PROCESSING OF YOUR PERSONAL INFORMATION AS DESCRIBED IN THIS PRIVACY NOTICE.

The Way Toro Uses Information
Toro may use your personal information to process warranty claims, to contact you in the event of a product recall and for any other purpose which we tell you about. Toro may share your information with Toro's affiliates, dealers or other business partners in connection with any of these activities. We will not sell your personal information to any other company. We reserve the right to disclose personal information in order to comply with applicable laws and with requests by the appropriate authorities, to operate our systems properly or for our own protection or that of other users.

Retention of your Personal Information
We will keep your personal information as long as we need it for the purposes for which it was originally collected or for other legitimate purposes (such as regulatory compliance), or as required by applicable law.

Toro's Commitment to Security of Your Personal Information
We take reasonable precautions in order to protect the security of your personal information. We also take steps to maintain the accuracy and current status of personal information.

Access and Correction of your Personal Information
If you would like to review or correct your personal information, please contact us by email at legal@toro.com.

Australian Consumer Law

Australian customers will find details relating to the Australian Consumer Law either inside the box or at your local Toro Dealer.

TimeCutter
and
TITAN
Mowers

The Toro Total Coverage Warranty

Limited Warranty (see warranty periods below)

Conditions and Products Covered

The Toro Company and its affiliate, Toro Warranty Company, pursuant to an agreement between them, jointly promise to the original purchaser to repair the Toro Products listed below if defective in materials or workmanship.

The following time periods apply from the date of purchase by the original owner:

Products	Warranty Period
TimeCutter and MX Mowers	Residential use[2] – 3 years
• Engines[1] — Residential use	Kawasaki – 3 years Kohler – 3 years Toro – 3 years
TimeCutter and MX Mowers	Commercial use 30 days
• Engines[1] — Commercial use	Kawasaki – 3 years Kohler – 90 days Toro – 90 days
TITAN Mowers – Residential or Commercial use	3 years or 300 hours[3]
• Engines[1] — Residential or Commercial use	Kawasaki – 3 years
• Frame	Lifetime (original owner only)[4]
TITAN MX5400 and MX600 Mowers – Residential or Commercial use	4 years or 400 hours[3]
• Engines[1] — Residential or Commercial use	Kawasaki – 3 years
• Frame	Lifetime (original owner only)[4]
All Mowers	
• Attachments	1 year
• Battery	90 days Parts and Labor 1 year Parts only
• Belts and Tires	90 days

[1]Some engines used on Toro Products are warranted by the engine manufacturer.

[2]Residential use means use of the product on the same lot as your home. Use at more than one location is considered commercial use and the commercial use warranty would apply.

[3]Whichever occurs first.

[4]Lifetime Frame Warranty - If the main frame, consisting of the parts welded together to form the tractor structure that other components such as the engine are secured to, cracks or breaks in normal use, it will be repaired or replaced, at Toro's option, under warranty at no cost for parts and labor. Frame failure due to misuse or abuse and failure or repair required due to rust or corrosion are not covered.

Warranty may be denied if the hour meter is disconnected, altered, or shows signs of being tampered with.

Owner Responsibilities

You must maintain your Toro Product by following the maintenance procedures described in the *Operator's Manual*. Such routine maintenance, whether performed by a dealer or by you, is at your expense.

Instructions for Obtaining Warranty Service

If you think that your Toro Product contains a defect in materials or workmanship, follow this procedure:

1. Contact any Authorized Toro Service Dealer to arrange service at their dealership. To locate a dealer convenient to you, refer to the *Yellow Pages* of your telephone directory (look under “Lawn Mowers”) or access our web site at www.Toro.com. You may also call the numbers listed in item #3 to use the 24-hour Toro Dealer locator system.
2. Bring the product and your proof of purchase (sales receipt) to the Service Dealer. The dealer will diagnose the problem and determine if it is covered under warranty.
3. If for any reason you are dissatisfied with the Service Dealer’s analysis or with the assistance provided, contact us at:

   Customer Care Department, RLC Division
   Toro Warranty Company
   8111 Lyndale Avenue South
   Bloomington, MN 55420-1196
   Toll free at 866-216-6029 (U.S. customers)
   Toll free at 866-216-6030 (Canadian customers)

Items and Conditions Not Covered

There is no other express warranty except for special emission system coverage and engine warranty coverage on some products. This express warranty does not cover the following:

- Cost of regular maintenance service or parts, such as filters, fuel, lubricants, oil changes, spark plugs, air filters blade sharpening or worn blades, cable/linkage adjustments, or brake and clutch adjustments
- Components failing due to normal wear
- Any product or part which has been altered or misused or neglected and requires replacement or repair due to accidents or lack of proper maintenance
- Pickup and delivery charges
- Repairs or attempted repairs by anyone other than an Authorized Toro Service Dealer
- Repairs necessary due to failure to follow recommended fuel procedure (consult *Operator's Manual* for more details)
  - Removing contaminants from the fuel system is not covered
  - Use of old fuel (more than one month old) or fuel which contains more than 10% ethanol or more that 15% MTBE
  - Failure to drain the fuel system prior to any period of non-use over one month

General Conditions

All repairs covered by these warranties must be performed by an Authorized Toro Service Dealer using Toro approved replacement parts.

Neither The Toro Company nor Toro Warranty Company is liable for indirect, incidental or consequential damages in connection with the use of the Toro Products covered by this warranty, including any cost or expense of providing substitute equipment or service during reasonable periods of malfunction or non-use pending completion of repairs under this warranty.

All implied warranties of merchantability (that the product is fit for ordinary use) and fitness for use (that the product is fit for a particular purpose) are limited to the duration of the express warranty.

Some states do not allow exclusions of incidental or consequential damages, or limitations on how long an implied warranty lasts, so the above exclusions and limitations may not apply to you.

This warranty gives you specific legal rights, and you may also have other rights which vary from state to state.

Countries Other than the United States or Canada

Customers who have purchased Toro products outside the United States or Canada should contact their Toro Distributor (Dealer) to obtain guarantee policies for your country, province, or state. If for any reason you are dissatisfied with your Distributor's service or have difficulty obtaining guarantee information, contact the Toro importer. If all other remedies fail, you may contact us at Toro Warranty Company.

Australian Consumer Law: Australian customers will find details relating to the Australian Consumer Law either inside the box or at your local Toro Dealer.