Form No. 3377-640 Rev B

Control Cover Kit

TR-34D Trench Roller

Model No. 68070

Installation Instructions

⚠ WARNING

CALIFORNIA
Proposition 65 Warning

This product contains a chemical or chemicals known to the State of California to cause cancer, birth defects, or reproductive harm.

Loose Parts

Use the chart below to verify that all parts have been shipped.

Description	Qty.	Use
No parts required	–	Disconnect the battery.
No parts required	–	Drill the holes (machines without existing holes).
Cover	1	Install the control cover.
Latch clip	1	
Latch mount assembly	1	
Catch mount assembly	1	
Washer (5/16 inch)	2	
Hex-socket bolt (1/4 x 5/8 inches)	13	
Hex-socket bolt (1/4 x 1-1/4 inches)	2	
Flange nut (1/4 inch)	15	

Disconnecting the Battery

1. Open the rear hood; refer to the Opening the Hood section in the *Owner's Manual*
2. Loosen the nut and bolt securing the negative-cable clamp to the battery post, and remove the clamp from the battery.

   Note: Ensure that the negative-cable clamp does not contact the battery post.

Drilling the Holes (Machines without Existing Holes)

1. Cover the rear compartment of the machine with a drop cloth to protect the components in the compartment from metal shavings that will be created while drilling mounting holes for the control cover.
2. Align the cover left to right over the control panel (Figure 1).
3. While keeping the hood centered, align the bottom edge of the cover to the rear edge of the hood (Figure 1).

© 2013—The Toro® Company
8111 Lyndale Avenue South
Bloomington, MN 55420

Register at www.Toro.com.

Original Instructions (EN)
Printed in the USA.
All Rights Reserved

3377-640 B

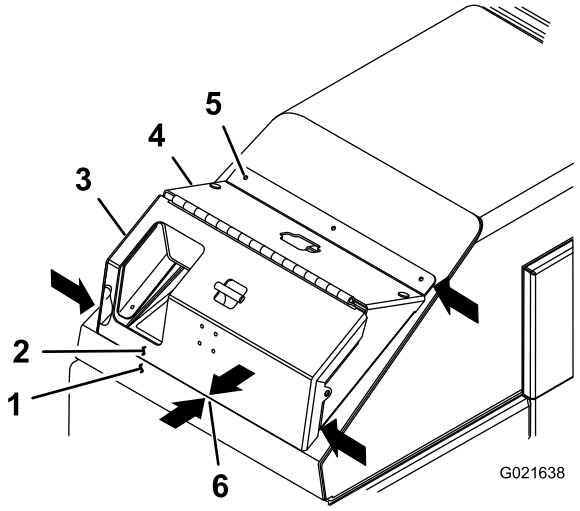

Figure 1

1. Rear edge of the hood
2. Bottom edge of the cover
3. Hinged cover
4. Cover
5. Holes in cover
6. Align the cover to the edge of the hood

4. Using the cover as a template, mark the outline of the holes on the rear hood (Figure 2).
5. Remove the cover from the machine.
6. Center-punch the hood at the marked locations created in step 4.
7. Drill 7 holes into the rear hood with a 9/32 inch drill bit at the center-punch marks (Figure 2).

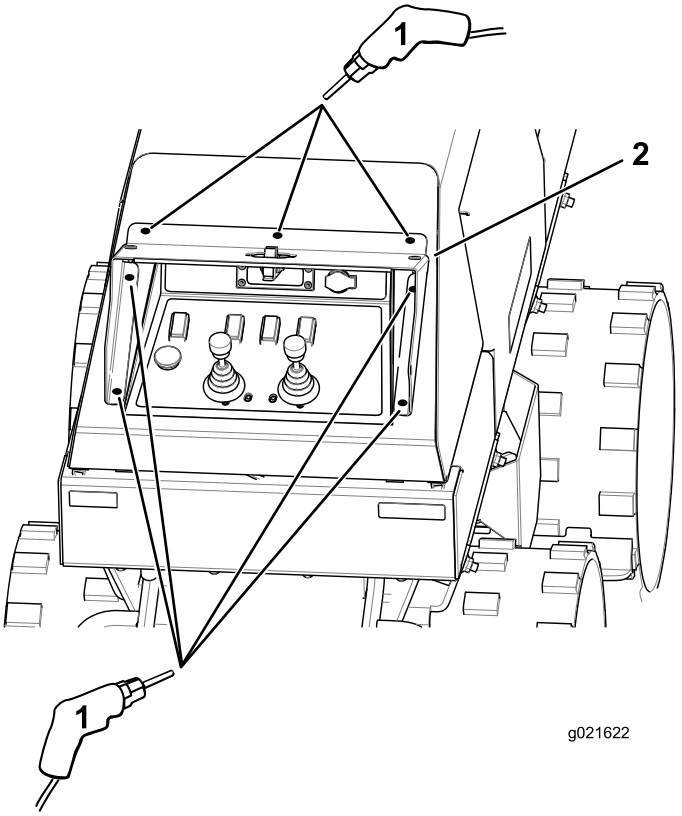

Figure 2

1. Mark and drill 9/32 inch holes here
2. Use the cover as a template

8. Remove the drop cloth under the rear hood and components.

Installing the Control Cover

1. Install the cover to the rear hood with 7 hex-socket bolt (1/4 x 5/8 inches) and 7 flange nuts (1/4 inch) (Figure 3).

   Note: Apply a thread-locking compound.

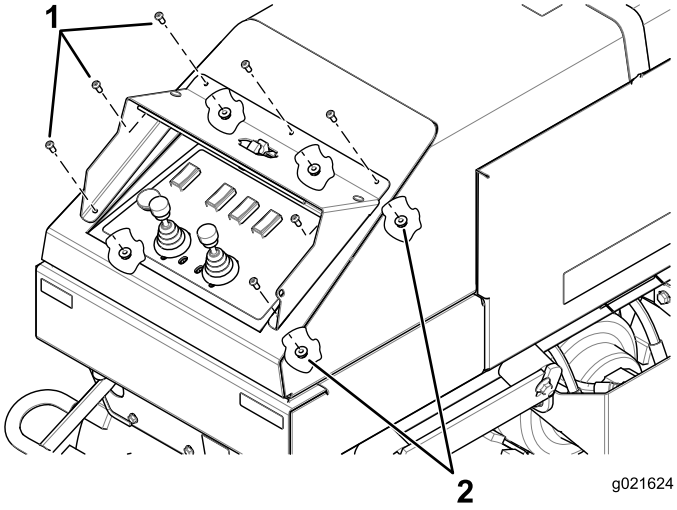

Figure 3

1. Hex-socket bolt (1/4 x 5/8 inches)
2. Flange nuts (1/4 inch)

2. Install the latch mount assembly to the machine with 2 hex-socket bolts (1/4 x 5/8 inches) and 2 flange nuts (1/4 inch) (Figure 4).

   Note: Remove any stickers blocking the holes.

   Note: Apply a thread-locking compound.

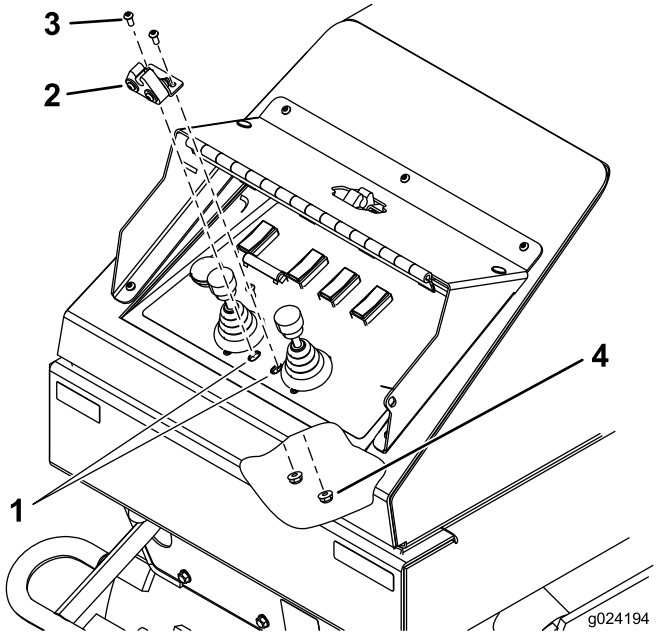

Figure 4

1. Cut slots out in decal
2. Latch mount assembly
3. Hex-socket bolt (1/4 x 5/8 inches)
4. Flange nuts (1/4 inch)

3. Assemble the latch clip to the latch mount with 2 hex-socket bolts (1/4 x 1-1/4 inches), 2 washers (5/16 inch), and 2 flange nuts (1/4 inch) (Figure 5).

   Note: Apply a thread-locking compound.

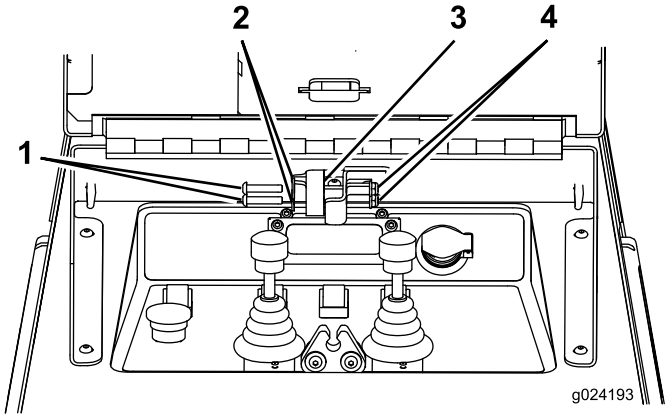

Figure 5

1. Hex-socket bolt (1/4 x 1-1/4 inches)
2. Washer
3. Latch clip
4. Flange nuts (1/4 inch)

4. Install the catch mount assembly to the machine with 4 hex-socket bolts (1/4 x 5/8 inches) and 4 flange nuts (1/4 inch) (Figure 6).

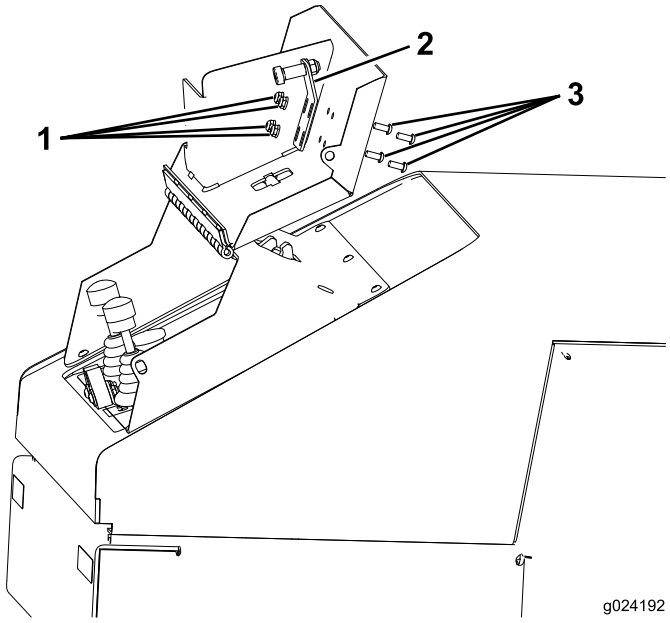

Figure 6

1. Flange nuts (1/4 inch)
2. Catch mount assembly
3. Hex-socket bolt (1/4 x 5/8 inches)

5. Connect the negative battery cable to the battery.



Count on it.