FORM NO. 3311-270 Rev. A

TORO®

MODEL NO. 30510—90001 & UP
MODEL NO. 30515—90001 & UP

INSTALLATION AND OPERATING INSTRUCTIONS

48" SNOWTHROWER WITH ADAPTER KIT

(GROUNDSMASTER 52®)

Since this instruction sheet covers only a minimal amount of information necessary to maintain and operate your machine, we suggest that you keep this material with your Operator's Manual so that both may be referred to for instructions concerning safe operation and proper maintenance procedures.

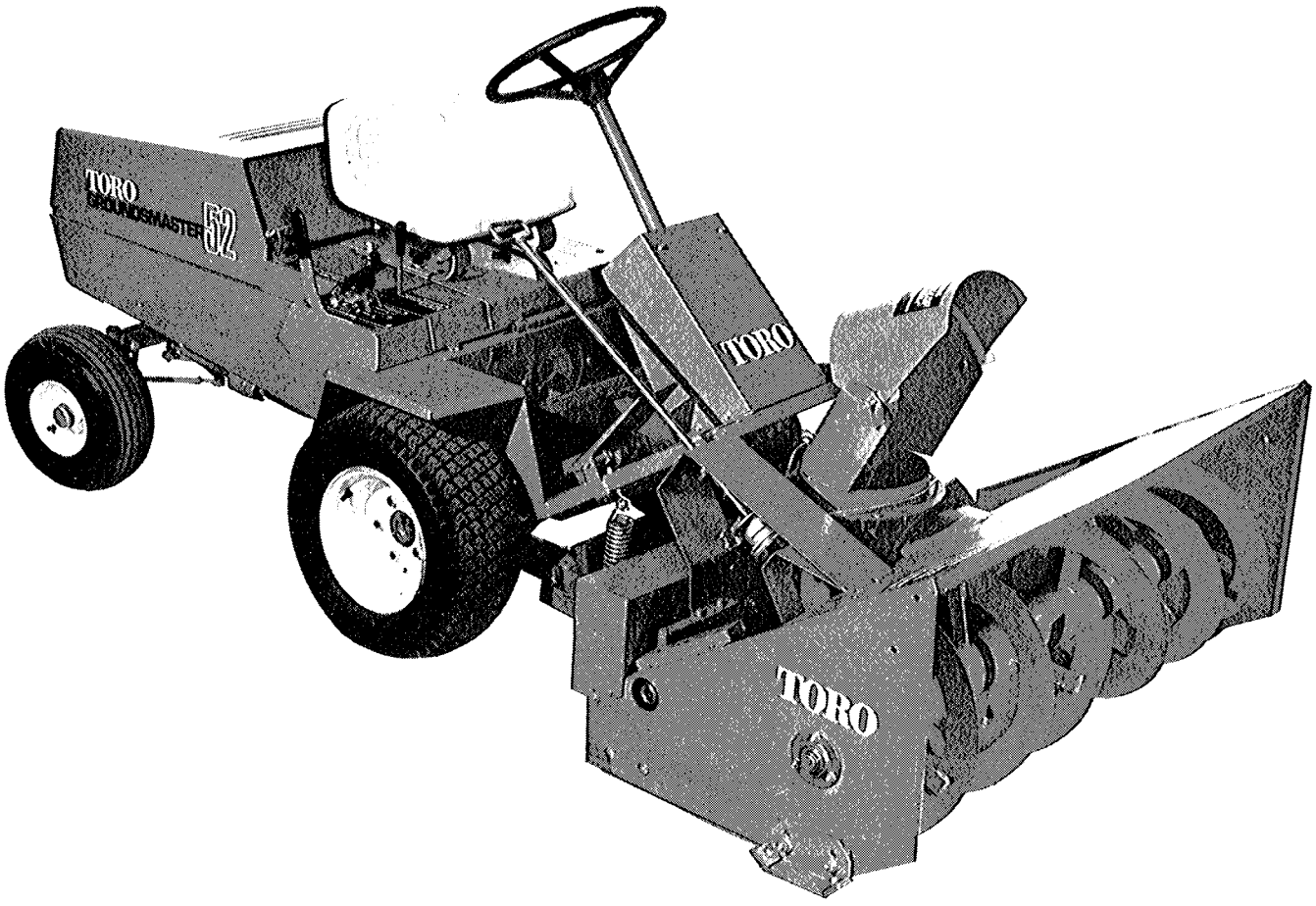

COPYRIGHT © ALL RIGHTS RESERVED
The Toro Company—1978, Rev. 1978
MINNEAPOLIS, MN 55420 – U.S.A.

SAFETY INSTRUCTIONS



This safety symbol means CAUTION, WARNING or DANGER – "personal safety instruction". Read and understand the instruction because it has to do with safety. Failure to comply with the instruction may result in personal injury.

The following instructions are comparable to the Instructions For Safe Snowthrowing adopted by ANSI – American National Standards Institute B71.3 - 1975.

The 48" Snowthrower is designed and tested to offer reasonably safe service. Failure to operate the machine in accordance with these Safety Instructions MAY RESULT IN PERSONAL INJURY.

BEFORE OPERATING

1. Read and understand the contents of this Operator's Manual and the Operator's and Service Manual for the Groundsmaster 52 before starting and operating the machine. Become familiar with all controls and know how to stop quickly. A replacement manual is available by sending complete Model and Serial Number to:

The Toro Company
8111 Lyndale Avenue South
Minneapolis, Minnesota 55420

2. Never allow children or adults unfamiliar with it's operation to operate the machine, and keep everyone, especially children and pets, away from the area of operation.

3. Keep all shields and safety devices in place. If a shield, safety device or decal is defective or damaged, repair or replace it before operation is commenced. Also tighten any loose nuts, bolts and screws to assure machine is in safe operating condition.

4. Do not wear loose fitting clothing which could get caught in moving parts. Wearing safety glasses, safety shoes and a helmet is advisable and required by some local ordinances and insurance regulations.

5. Assure interlock switches are adjusted correctly so engine cannot be started unless traction pedal is released – neutral position – and PTO lever is in DISENGAGE position.

6. Fill fuel tank with gasoline before starting the engine. Avoid spilling any gasoline. Since gasoline is highly flammable, handle it carefully – DO NOT SMOKE.

A. Use an approved gasoline container.

B. Fill fuel tank outdoors and only when engine is not running. Engine must be cool to prevent a potential fire hazard.

C. Wipe up any gasoline that spilled, and install gasoline container cap and machine fuel tank cap securely before starting the engine.

WHILE OPERATING

7. Do not run the engine in a confined area without adequate ventilation. Exhaust fumes are hazardous and could possibly be deadly.

8. Maximum seating capacity is one person. Never carry passengers.

9. Sit on the seat when starting the engine and operating the machine.

10. When starting the engine:

A. Engage parking brake.

B. Assure traction pedal is in neutral and PTO is in disengage position.

C. After engine is started, release parking break and keep foot off traction pedal. Machine must not move. If movement is evident, the neutral return mechanism is adjusted incorrectly; therefore, shut engine off and adjust until machine does not move when traction speed control lever is in neutral position.

11. Using the machine demands attention, and to prevent loss of control:

A. Operate only in daylight or when there is good artificial light.

B. Watch for holes or other hidden hazards.

C. Do not drive close to a ditch, creek or other hazard.

D. Reduce speed when making sharp turns and when turning on hillsides.

E. Avoid sudden stops and starts.

SAFETY INSTRUCTIONS

F. Before backing up, look to the rear and assure no one is behind the machine.

G. Watch out for traffic when near or crossing roads. Always yield the right-of-way.

12. Never direct discharge of snow or operate snowthrower near bystanders, glass enclosures, automobiles and trucks, window wells or a drop-off without proper adjustment of the snow discharge angle.

13. If the snowthrower strikes a solid object or the machine vibrates abnormally, disengage PTO, move throttle to slow, set parking brake and shut engine off. Remove key from ignition switch and pull high tension wire off spark plugs to prevent possibility of accidental starting. Check snowthrower and traction unit for damage and defective parts. Make all repairs before restarting the engine and operating the unit.

14. Clear snow from slopes by going up and down; never across the face, and use caution when changing directions. Never clear snow from steep slopes.

15. Do not touch engine, muffler or its adjacent shroud while engine is running or soon after it is stopped. These areas could be hot enough to cause a burn.

16. Before getting off the seat:

A. Move traction pedal to neutral position and remove foot from pedal.

B. Set the parking brake and disengage the PTO.

C. Shut the engine off and remove key from ignition switch. Wait for all movement to stop before getting off the seat.

17. Lower the snowthrower to the ground and remove key from ignition switch whenever machine is left unattended.

MAINTENANCE

18. Remove key from ignition switch and pull high tension wire off spark plugs to prevent accidental starting of the engine when servicing, adjusting or storing the machine.

⚠ CAUTION

1. KEEP ALL SHIELDS IN PLACE.
2. BEFORE LEAVING OPERATOR'S POSITION:
   A. MOVE TRANSMISSION TO NEUTRAL.
   B. SET PARKING BRAKE.
   C. DISENGAGE ATTACHMENT CLUTCH.
   D. SHUT OFF ENGINE.
   E. REMOVE IGNITION KEY.
3. WAIT FOR ALL MOVEMENT TO STOP BEFORE SERVICING MACHINE.
4. KEEP BYSTANDERS FROM AREAS BEING CLEARED.

⚠ WARNING

WHEN OPERATED WITH SNOW THROWER IN RAISED POSITION, FORWARD STABILITY AND STEERING CONTROL WILL BE SERIOUSLY DEGRADED.

1. GM 52 TRACTION UNIT MUST BE EQUIPPED WITH 5 REAR WEIGHTS PART NUMBER 24-5790 WITH SNOWTHROWER INSTALLED.

2. GMT TRACTION UNIT MUST BE EQUIPPED WITH 425 POUNDS (193 KG.) BALLAST IN REAR BOX OF TRACTOR.

SEE SNOWTHROWER MANUAL FOR COMPLETE INSTRUCTIONS.

⚠ ATTENTION

LORSQUE VOUS OPEREZ AVEC LA SOUFFLEUSE EN POSITION RELEVEE, LA STABILITE ET LA CONDUITE DE L'UNITE EN SERONT DIMINUEES.

1. L'UTILISATION DE LA SOUFFLEUSE A NEIGE REQUIERT 5 POIDS ARRIERE NO 24-5790 SUR L'UNITE DE TRACTEUR GM 52.

2. L'UNITE DE TRACTION GMT REQUIERT UN POIDS DE 193 KG (425 LBS) DANS LA BOITE ARRIERE LORSQU'UTILISEE AVEC LA SOUFFLEUSE A NEIGE.

POUR PLUS DE DETAILS, CONSULTER LE MANUEL D'INSTRUCTION DE LA SOUFFLEUSE A NEIGE.

SET UP INSTRUCTIONS

ASSEMBLE SNOWTHROWER

1. Slide right and left adapters onto snowthrower, align holes and secure with capscrew and locknut (Fig. 1).

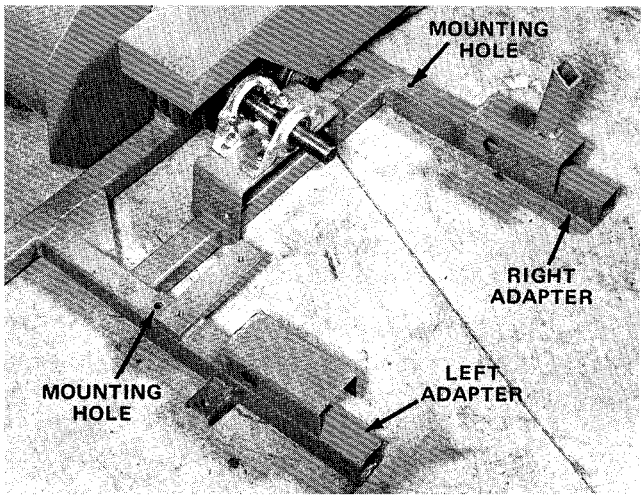

Figure 1

2. Mount pulley to shaft with square key and (2) set screws (Fig. 2).

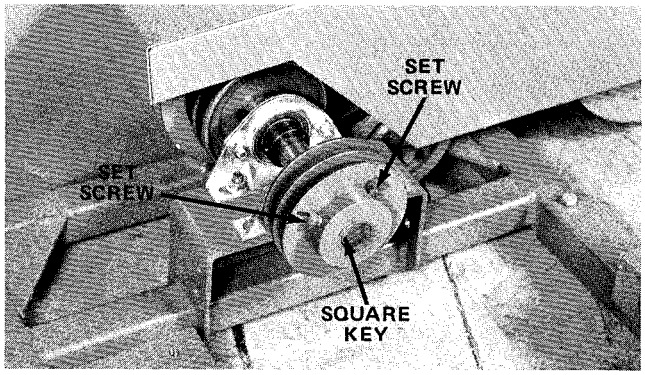

Figure 2

3. Loosely mount pulley and bracket assembly to left adapter. Install belts on pulleys and tighten pulley bracket while tightening belts (Fig. 3).

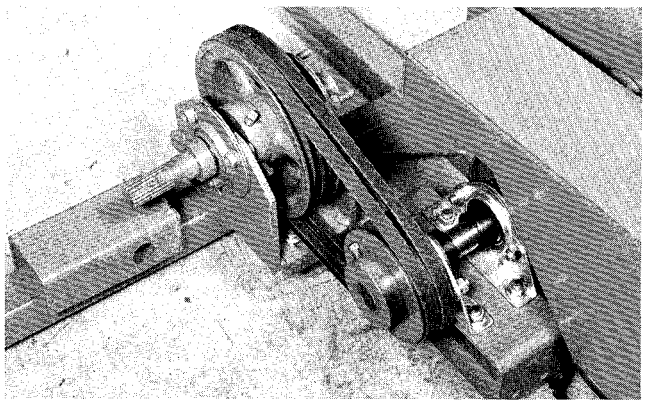

Figure 3

4. Install belt shield (Fig. 4).

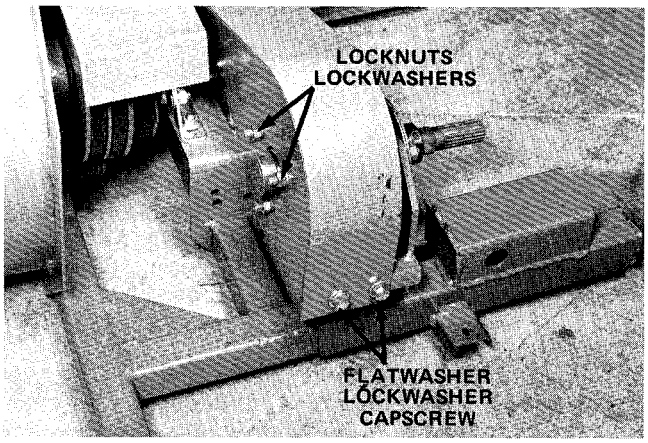

Figure 4

5. Remove fasteners and clamps from chute for mounting (Fig. 5).

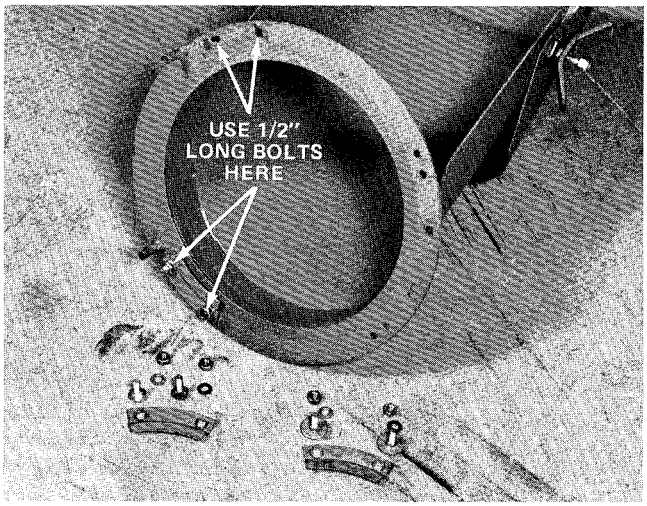

Figure 5

6. Slide chute onto snowthrower with spout opening toward front. Secure front and right sides of chute to snowthrower (Fig. 6).

Note: Use 1/2 inch long bolts to permit full chute travel as indicated in Fig. 5.

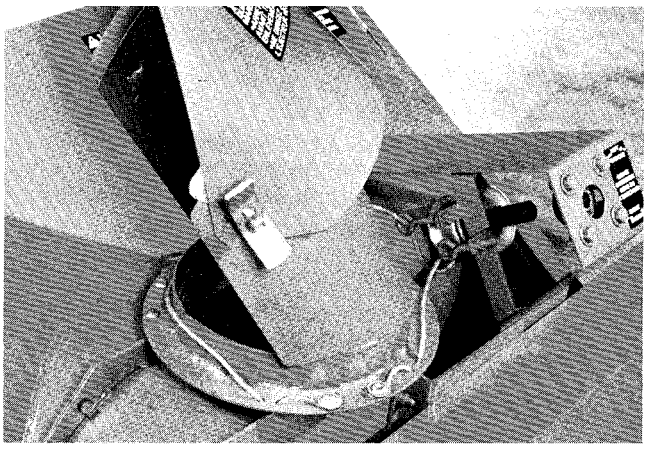

Figure 6

SET UP INSTRUCTIONS

7. Route directional control cables around chute, through holes in chute and secure with remaining clamp and fasteners (Fig. 6).

8. Mount chute pivot handle to connector tube on cable pulley with roll pin (Fig. 7).

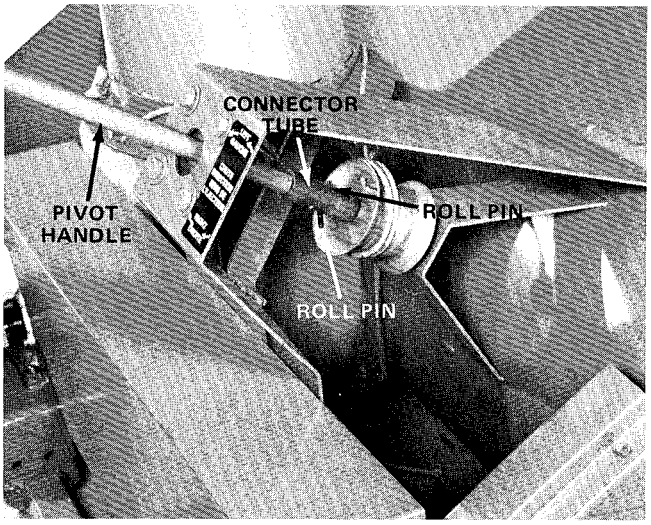

Figure 7

9. Mounting holes must be drilled in front frame tube to install eyebolts for floatation springs. Locate position for mounting holes (Fig. 8), and drill a 7/16 inch hole through both walls of tubing on each side of tubing.

10. Attach eyebolts to frame (Fig. 8).

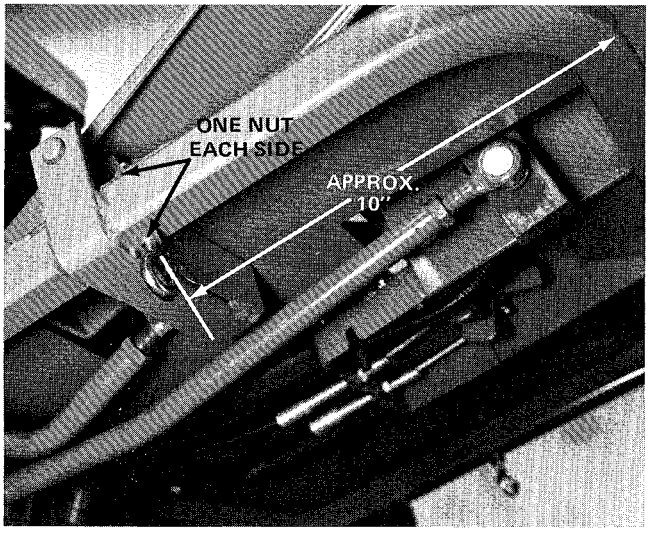

Figure 8

MOUNT SNOWTHROWER TO TRACTION UNIT

1. Move traction unit into mounting position in front of snowthrower.

2. Move hydraulic lift lever to float position and lower lift arm.

3. Move traction unit toward snowthrower and slide lift arms into lift brackets. Line up mounting holes and secure snowthrower to lift arms with pivot pins and cotter pins (Fig. 9).

4. Slide PTO shaft onto shaft of snowthrower and secure with roll pin (Fig. 9).

5. Loosely install eyebolts to snowthrower lift brackets (Fig. 9).

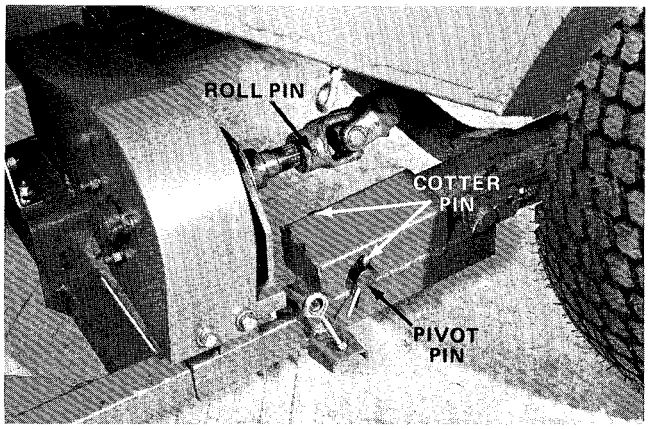

Figure 9

6. Raise snowthrower and hook floatation springs to eyebolts. Tighten eyebolts so springs are extended approximately 1 inch when snowblower is in the maximum raised position (Fig. 10).

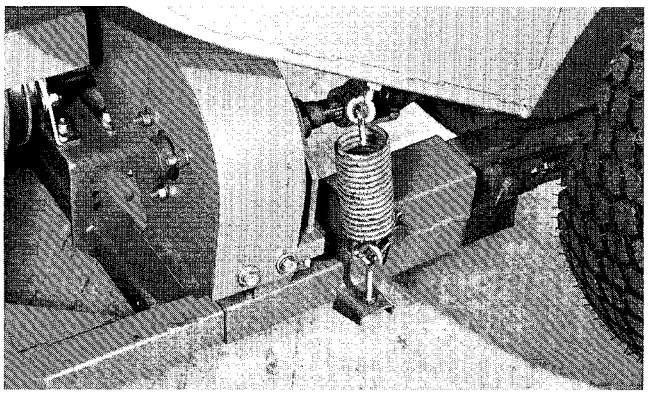

Figure 10

MAINTENANCE

SNOWBLOWER DRIVE BELT

This belt is automatically tensioned by a spring-loaded idler. The idler arm pivot should be checked periodically to insure free movement of the idler arm (Fig. 11).

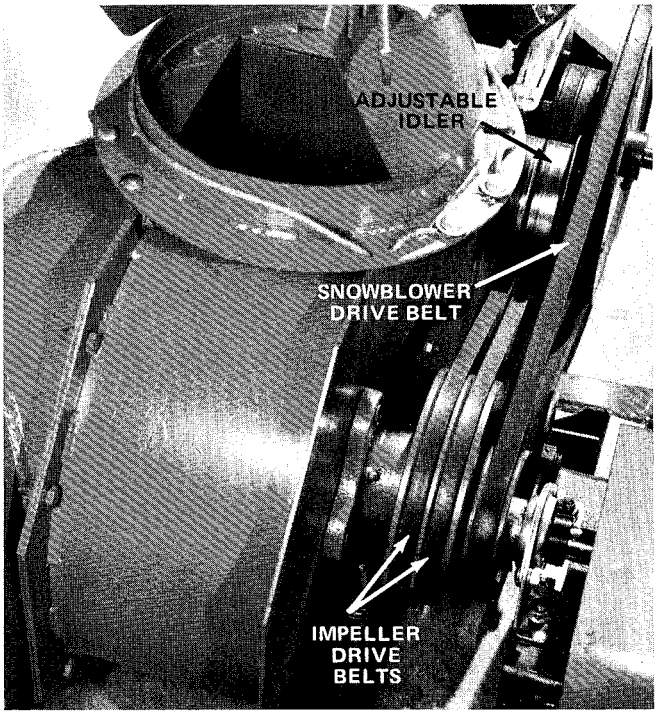

Figure 11

IMPELLER DRIVE BELTS

It is very important to maintain proper adjustment on the impeller drive belts to insure long belt life (Fig. 11).

A. Remove shield.

B. Loosen locknut on idler adjustment bolt.

C. Increase belt tension by moving the idler pulley downward in the slot. Correct belt tension is 1/4" total deflection with 5-6 lb force applied on center of each belt.

When belt can no longer be adjusted install a new belt.

AUGER DRIVE CHAIN

Loosen adjusting bolt and slide downward until correct chain tension is obtained. Retighten bolt. Correct chain tension is total deflection 1/4 inch, measured on the bottom span of the chain. Replace chain when it can no longer be adjusted (Fig. 12).

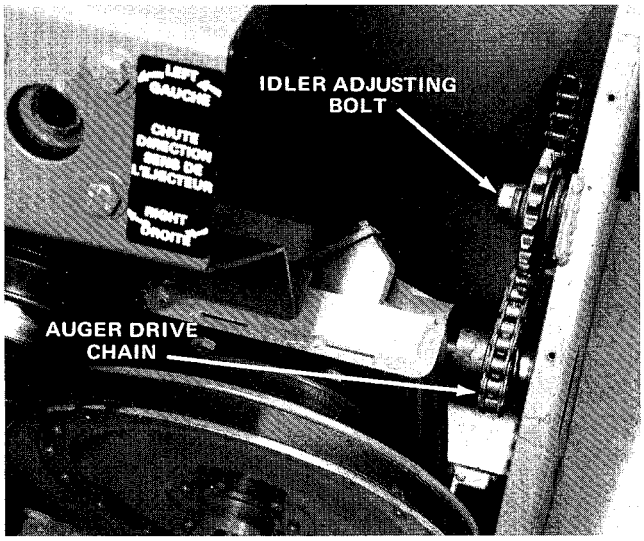

Figure 12

SKID SHOES

The skid shoes on each side of the unit should be adjusted so that the shoe bottoms are slightly below the scraper blade. This prevents the blade from riding on the ground and allows it to clear cracks in sidewalks and driveways, etc. Proper adjustment of the skid shoes will eliminate excessive wear on the scraper blade (Fig. 13).

CAUTION

Always adjust skid shoes to clear gravel or crushed rock surfaces.

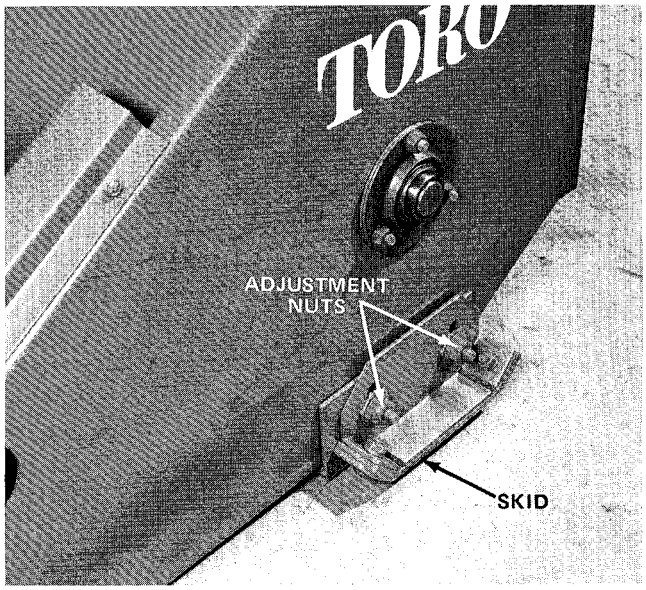

Figure 13

MAINTENANCE

DEFLECTOR

To adjust the discharge chute deflector loosen the large wing nuts on each side of the chute. Raise or lower the cap as desired. Lowering the cap will reduce the distance the snow is thrown.

Note: Do not lower deflector any more than necessary in heavy wet snow as this tends to clog chute (Fig. 14).

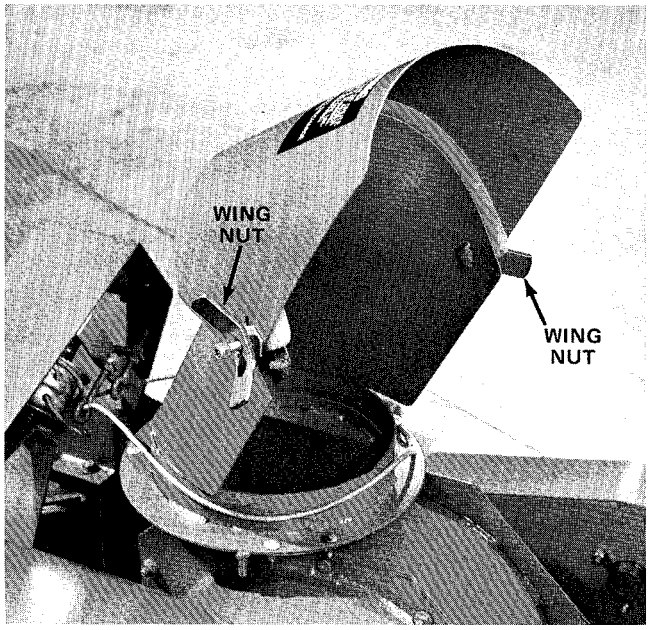

Figure 14

SCRAPER BLADE

Check the scraper blade for wear. The blade can be reversed when the front edge is worn. Replace the scraper blade before it is worn excessively so auger housing will not be damaged.

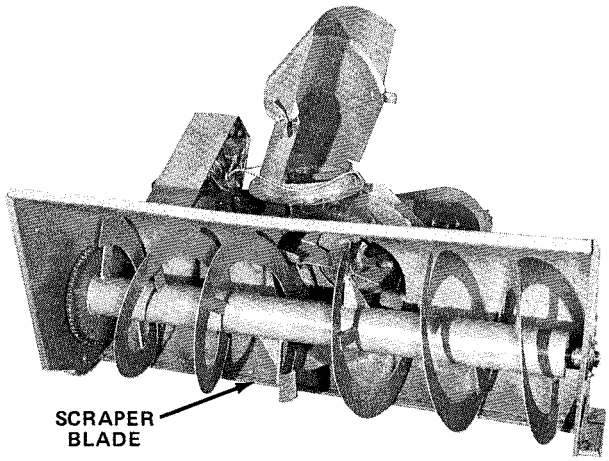

Figure 15

SLIP CLUTCH ADJUSTMENT

If auger slips during normal operation adjust slip clutch. Remove outer jam nut, tighten inner jam nut 1/4 turn and reinstall outer jam nut (Fig. 16).

Note: Do not over tighten inner jam nut as auger may not slip if obstruction is hit.

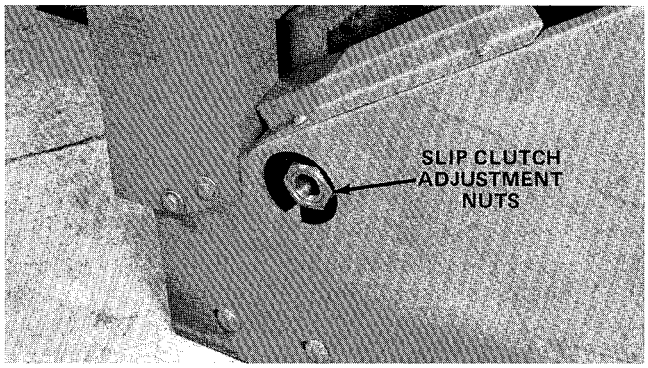

Figure 16

The Toro Promise

A One Year Limited Warranty on Turf Products Other Than Walk Rotary Mowers

The Toro Company promises to repair any TORO Product if defective in materials or workmanship. The following time periods from the date of purchase apply:

Turf Products	1 Year
Hevi-Duty Walk Rotary Mowers	90 Days

The costs of parts and labor are included, but the customer pays the transportation costs on walk rotary mowers.

Should you feel your TORO is defective and wish to rely on The Toro Promise, the following procedure is recommended:

1. Contact your Authorized TORO Distributor (the Yellow Pages of your telephone directory is a good reference source).

2. The TORO Distributor will advise you on the arrangements that can be made to inspect and repair your product.

3. The TORO Distributor will inspect the product and advise you whether the product is defective and, if so, make all repairs necessary to correct the defect without extra charge to you.

If for any reason you are dissatisfied with the distributor's analysis of the defect or the service performed, you may contact us.

Write:

TORO Turf Products Service Department
8111 Lyndale Avenue South
Minneapolis, Minnesota 55420

The above remedy of product defects through repair by an Authorized TORO Distributor is the purchaser's sole remedy for any defect.

THERE IS NO OTHER EXPRESS WARRANTY. ALL IMPLIED WARRANTIES OF MERCHANTABILITY AND FITNESS FOR USE ARE LIMITED TO THE DURATION OF THE EXPRESS WARRANTY.

Some states do not allow limitation on how long implied warranty lasts, so the above limitation may not apply to you.

This Warranty applies only to parts or components which are defective and does not cover repairs necessary due to normal wear, misuse, accidents, or lack of proper maintenance. Regular, routine maintenance of the unit to keep it in proper operating condition is the responsibility of the owner.

All warranty repairs reimbursable under The Toro Promise must be performed by an Authorized TORO Distributor using Toro approved replacement parts.

Repairs or attempted repairs by anyone other than an Authorized TORO Distributor are not reimbursable under The Toro Promise. In addition, these unauthorized repair attempts may result in additional malfunctions, the correction of which is not covered by warranty.

The Toro Company is not liable for indirect, incidental or consequential damages in connection with the use of the product including any cost or expense of providing substitute equipment or service during periods of malfunction or non-use.

Some states do not allow the exclusion of incidental or consequential damages, so the above exclusion may not apply to you.

This warranty gives you specific legal rights, and you may also have other rights which vary from state to state.

Compliance with Radio Interference Regulations Certified.
Certifie Conforme au Reglement sur le Brouillage Radioelectrique.

Litho in U.S.A.