Form No. 3380-781 Rev A

TORO®

Count on it.

Operator's Manual

# Z Master® Commercial 3000 Series Riding Mower

## with 72in TURBO FORCE® Side Discharge Mower

### Model No. 74959—Serial No. 314000001 and Up

Register at www.Toro.com.
Original Instructions (EN)

*3380-781* A

**⚠ WARNING**

**CALIFORNIA**
**Proposition 65 Warning**

**This product contains a chemical or chemicals known to the State of California to cause cancer, birth defects, or reproductive harm.**

**The engine exhaust from this product contains chemicals known to the State of California to cause cancer, birth defects, or other reproductive harm.**

This spark ignition system complies with Canadian ICES-002

Because in some areas there are local, state, or federal regulations requiring that a spark arrester be used on the engine of this machine, a spark arrester is available as an option. If you require a spark arrestor, contact your Authorized Toro Dealer.

Genuine Toro spark arresters are approved by the USDA Forestry Service.

**Note:** It is a violation of California Public Resource Code Section 4442 to use or operate the engine on any forest-covered, brush-covered, or grass-covered land without a spark arrester muffler maintained in working order, or the engine constricted, equipped, and maintained for the prevention of fire. Other states or federal areas may have similar laws.

**⚠ WARNING**

**Removing standard original equipment parts and accessories may alter the warranty, traction, and safety of the machine. Failure to use original Toro parts could cause serious injury or death. Making unauthorized changes to the engine, fuel or venting system, may violate EPA and CARB regulations.**

**Replace all parts including, but not limited to, tires, belts, blades, and fuel system components with original Toro parts.**

**The enclosed *Engine Owner's Manual* is supplied for information regarding the US Environmental Protection Agency (EPA) and the California Emission Control Regulation of emission systems, maintenance, and warranty. Replacements may be ordered through the engine manufacturer.**

# Introduction

This rotary-blade, riding lawn mower is intended to be used by residential homeowners or professional, hired operators. It is designed primarily for cutting grass on well-maintained lawns on residential or commercial properties. It is not designed for cutting brush or for agricultural uses.

Read this information carefully to learn how to operate and maintain your product properly and to avoid injury and product damage. You are responsible for operating the product properly and safely.

You may contact Toro directly at www.Toro.com for product and accessory information, help finding a dealer, or to register your product.

Whenever you need service, genuine Toro parts, or additional information, contact an Authorized Service Dealer or Toro Customer Service and have the model and serial numbers of your product ready. Figure 1 identifies the location of the model and serial numbers on the product. Write the numbers in the space provided.

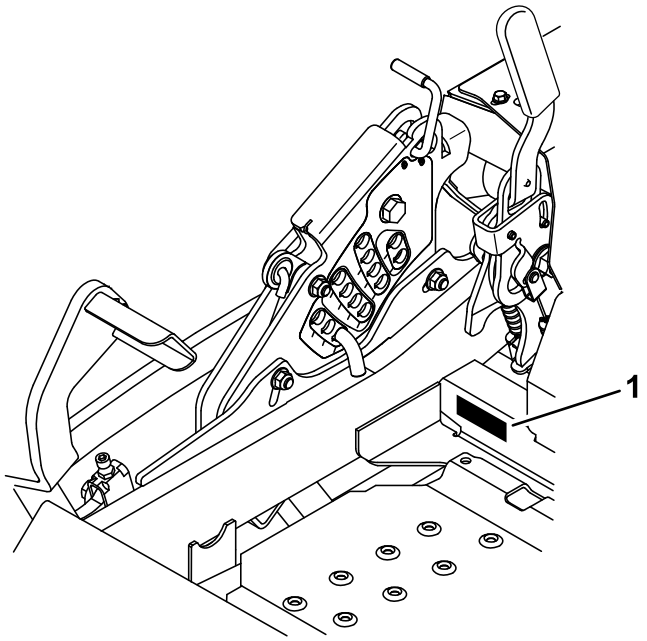


**Figure 1**

1. Model and serial number location

**Model No.** _____

**Serial No.** _____

This manual identifies potential hazards and has safety messages identified by the safety alert symbol (Figure 2), which signals a hazard that may cause serious injury or death if you do not follow the recommended precautions.

**© 2013—The Toro® Company**
**8111 Lyndale Avenue South**
**Bloomington, MN 55420**



**Contact us at www.Toro.com.**
**Printed in the USA.**
**All Rights Reserved**

**Figure 2**

1. Safety alert symbol

This manual uses 2 words to highlight information. **Important** calls attention to special mechanical information and **Note** emphasizes general information worthy of special attention.

# Contents


Introduction ..... 2
Safety ..... 4
Safe Operating Practices ..... 4
Slope Indicator ..... 6
Safety and Instructional Decals ..... 7
Product Overview ..... 12
Controls ..... 12
Specifications ..... 13
Operation ..... 14
Adding Fuel ..... 14
Checking the Engine Oil Level ..... 15
Breaking In a New Machine ..... 15
Using the Rollover Protection System (ROPS) ..... 15
Think Safety First ..... 16
Operating the Parking Brake ..... 16
Operating the Mower Blade Control Switch (PTO) ..... 17
Operating the Throttle ..... 17
Operating the Ignition Switch ..... 17
Using the Fuel Shut-Off Valve ..... 18
Starting and Stopping the Engine ..... 18
The Safety Interlock System ..... 19
Driving Forward or Backward ..... 20
Stopping the Machine ..... 21
Adjusting the Height of Cut ..... 21
Adjusting the Anti-scalp Rollers ..... 22
Adjusting the Flow Baffle Cam Locks ..... 23
Positioning the Flow Baffle ..... 24
Positioning the Seat ..... 24
Using the Drive Wheel Release Valves ..... 25
Using the Side Discharge ..... 25
Loading Machines ..... 25
Transporting Machines ..... 26
Operating Tips ..... 27
Maintenance ..... 28
Recommended Maintenance Schedule(s) ..... 28
Lubrication ..... 29
Lubricating the Machine ..... 29
Greasing the Mower ..... 29
Lubricate the Caster Wheel Hubs ..... 30
Engine Maintenance ..... 31
Servicing the Air Cleaner ..... 31
Servicing the Engine Oil ..... 32
Servicing the Spark Plug ..... 35
Check the Spark Arrester (if equipped) ..... 36
Fuel System Maintenance ..... 37
Replacing the Fuel Filter ..... 37
Servicing the Fuel Tank ..... 37
Electrical System Maintenance ..... 38
Servicing the Battery ..... 38
Servicing the Fuses ..... 39
Drive System Maintenance ..... 40
Checking the Seat Belt ..... 40
Checking the Rollover Protection System (ROPS) Knobs ..... 40
Adjusting the Tracking ..... 40
Checking the Tire Pressure ..... 41
Checking the Wheel Lug Nuts ..... 41
Checking the Wheel Hub Slotted Nut ..... 41
Adjusting the Caster Pivot Bearing ..... 41
Using the Clutch Shim ..... 42
Cooling System Maintenance ..... 44
Cleaning the Engine Screen and Engine Oil Cooler ..... 44
Cleaning the Engine Cooling Fins and Shrouds ..... 44
Check and Clean the Hydraulic Units ..... 45
Brake Maintenance ..... 45
Adjusting the Parking Brake ..... 45
Belt Maintenance ..... 46
Inspecting the Belts ..... 46
Replacing the Mower Belt ..... 46
Replacing the Hydraulic Pump Drive Belt ..... 47
Controls System Maintenance ..... 48
Adjusting the Control Handle Position ..... 48
Adjusting the Motion Control Linkage ..... 49
Adjusting the Motion-control Damper ..... 50
Adjusting the Motion Control Neutral Lock Pivot ..... 50
Hydraulic System Maintenance ..... 51
Servicing the Hydraulic System ..... 51
Mower Deck Maintenance ..... 53
Leveling the Mower Deck ..... 53
Servicing the Cutting Blades ..... 54
Removing the Mower Deck ..... 57
Replacing the Grass Deflector ..... 58
Cleaning ..... 58
Cleaning Under the Mower ..... 58
Waste Disposal ..... 58
Storage ..... 59
Cleaning and Storage ..... 59
Troubleshooting ..... 60
Schematics ..... 62

# Safety

Improper use or maintenance can result in injury. To reduce the potential for injury, comply with these safety instructions and always pay attention to the safety alert symbol, which means **CAUTION, WARNING,** or **DANGER**-"personal safety instruction." Failure to comply with the instruction may result in personal injury or death.

This product is capable of amputating hands and feet and throwing objects. Always follow all safety instructions to avoid serious injury or death.

This product is designed for cutting and recycling grass or, when equipped with a grass bagger, for catching cut grass. Any use for purposes other than these could prove dangerous to user and bystanders.

# Safe Operating Practices

The following instructions are adapted from ANSI standard B71.4-2012.

## Training

- Read the Operator's Manual and other training material. If the operator(s) or mechanic(s) can not read English it is the owner's responsibility to explain this material to them.
- Become familiar with the safe operation of the equipment, operator controls, and safety signs.
- All operators and mechanics should be trained. The owner is responsible for training the users.
- Never let children or untrained people operate or service the equipment. Local regulations may restrict the age of the operator.
- The owner/user can prevent and is responsible for accidents or injuries occurring to people or damage to property.

## Preparation

- Evaluate the terrain to determine what accessories and attachments are needed to properly and safely perform the job. Only use accessories and attachments approved by the manufacturer.
- Wear appropriate clothing including hard hat, safety glasses and hearing protection. Long hair, loose clothing or jewelry may get tangled in moving parts.
- Inspect the area where the equipment is to be used and remove all objects such as rocks, toys and wire which can be thrown by the machine.
- Check that operator's presence controls, safety switches and shields are attached and functioning properly. Do not operate unless they are functioning properly.

## Operation

- Lightning can cause severe injury or death. If lightning is seen or thunder is heard in the area, do not operate the machine; seek shelter.
- Never run an engine in an enclosed area.
- Only operate in good light, keeping away from holes and hidden hazards.
- Be sure all drives are in neutral and parking brake is engaged before starting engine. Only start engine from the operator's position.
- Slow down and use extra care on hillsides. Be sure to travel side to side on hillsides. Turf conditions can affect the machine's stability. Use caution while operating near drop-offs.
- Slow down and use caution when making turns and when changing directions on slopes.
- Never raise deck with the blades running.
- Never operate with the PTO shield, or other guards not securely in place. Be sure all interlocks are attached, adjusted properly, and functioning properly.
- Never operate with the discharge deflector raised, removed or altered, unless using a grass catcher.
- Do not change the engine governor setting or overspeed the engine.
- Stop on level ground, disengage drives, engage parking brake (if provided), shut off engine before leaving the operator's position for any reason including emptying the catchers or unclogging the chute.
- Stop equipment and inspect blades after striking objects or if an abnormal vibration occurs. Make necessary repairs before resuming operations.
- Keep hands and feet away from the cutting unit.
- Look behind and down before backing up to be sure of a clear path.
- Keep pets and bystanders away.
- Slow down and use caution when making turns and crossing roads and sidewalks. Stop blades if not mowing.
- Be aware of the mower discharge direction and do not point it at anyone.
- Do not operate the mower under the influence of alcohol or drugs.
- Use care when loading or unloading the machine into or from a trailer or truck.
- Use care when approaching blind corners, shrubs, trees, or other objects that may obscure vision.

## Rollover Protection System (ROPS) - Use and Maintenance

- **Do not** remove the ROPS.
- The ROPS is an integral and effective safety device. Keep the ROPS on the machine and use the seat belt when operating the machine.

- Be certain that the seat belt can be released quickly in the event of an emergency.
- Check the area to be mowed where there are slopes, drop offs or water.
- Check carefully for overhead clearances (i.e. branches, doorways, electrical wires) before driving under any objects and do not contact them.
- Keep the ROPS in safe operating condition by periodically thoroughly inspecting for damage and keeping all mounting fasteners tight.
- Replace a damaged ROPS. Do not repair or revise.
- Any alterations to a ROPS must be approved by the manufacturer.

## Safe handling of fuels

- To avoid personal injury or property damage, use extreme care in handling gasoline. Gasoline is extremely flammable and the vapors are explosive.
- Extinguish all cigarettes, cigars, pipes, and other sources of ignition.
- Use only an approved fuel container.
- Never remove fuel cap or add fuel with the engine running.
- Allow engine to cool before refueling.
- Never refuel the machine indoors.
- Never store the machine or fuel container where there is an open flame, spark, or pilot light such as on a water heater or on other appliances.
- Never fill containers inside a vehicle or on a truck or trailer bed with a plastic liner. Always place containers on the ground away from your vehicle before filling.
- Remove equipment from the truck or trailer and refuel it on the ground. If this is not possible, then refuel such equipment with a portable container, rather than from a fuel dispenser nozzle.
- Keep the nozzle in contact with the rim of the fuel tank or container opening at all times until fueling is complete. Do not use a nozzle lock open device.
- If fuel is spilled on clothing, change clothing immediately.
- Never overfill fuel tank. Replace fuel cap and tighten securely.

## Maintenance and storage

- Disengage drives, set parking brake, stop engine and remove key or disconnect spark-plug wire. Wait for all movement to stop before adjusting, cleaning or repairing.
- Clean grass and debris from cutting unit, drives, mufflers, and engine to help prevent fires. Clean up oil or fuel spillage.
- Let engine cool before storing and do not store near flame.
- Shut off fuel while storing or transporting. Do not store fuel near flames or drain indoors.
- Park the machine on level ground. Set the parking brake. Never allow untrained personnel to service the machine.
- Use jack stands to support components when required.
- Carefully release pressure from components with stored energy.
- Disconnect the battery or remove spark-plug wire before making any repairs. Disconnect the negative terminal first and the positive last. Reconnect the positive first and negative last.
- Use care when checking blades. Wrap the blade(s) or wear gloves, and use caution when servicing them. Only replace blades. Never straighten or weld them.
- Keep hands and feet away from moving parts. If possible, do not make adjustments with the engine running.
- Keep all parts in good working condition and all hardware tightened. Replace all worn or damaged decals.

## Hauling

- Use care when loading or unloading the machine into a trailer or truck.
- Use full width ramps for loading machine into trailer or truck.
- Tie the machine down securely using straps, chains, cable, or ropes. Both front and rear straps should be directed down and outward from the machine.

# Slope Indicator

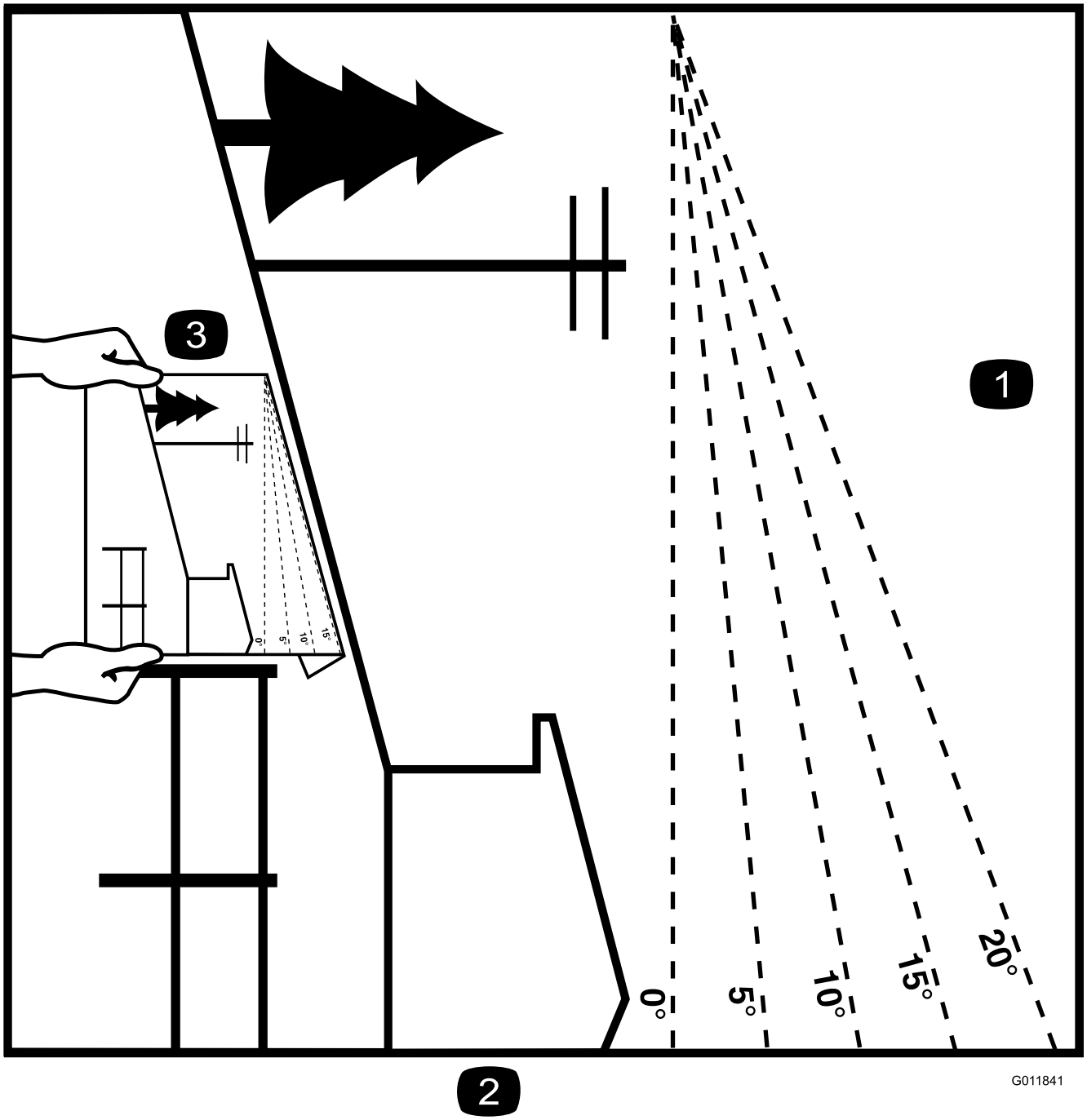


**Figure 3**

This page may be copied for personal use.

1. The maximum slope you can safely operate the machine on is **15 degrees**. Use the slope chart to determine the degree of slope of hills before operating. **Do not operate this machine on a slope greater than 15 degrees.** Fold along the appropriate line to match the recommended slope.
2. Align this edge with a vertical surface, a tree, building, fence pole, etc.
3. Example of how to compare slope with folded edge.

# Safety and Instructional Decals

Safety decals and instructions are easily visible to the operator and are located near any area of potential danger. Replace any decal that is damaged or lost.

**1-403005**

**54-9220**

1

**58-6520**

1. Grease

**66-1340**

**68-8340**

**98-5954**

**103-2076**

**105-7798**

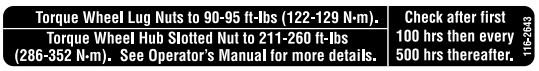


**116-2643**

**107-2102**

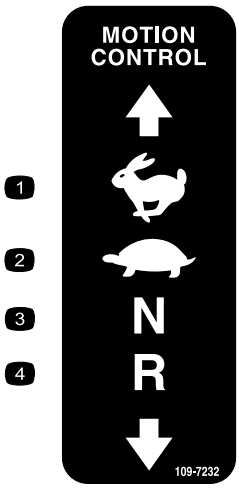


**109-7232**

1. Fast
2. Slow
3. Neutral
4. Reverse

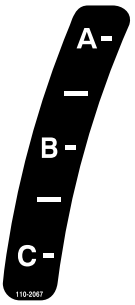


**110-2067**

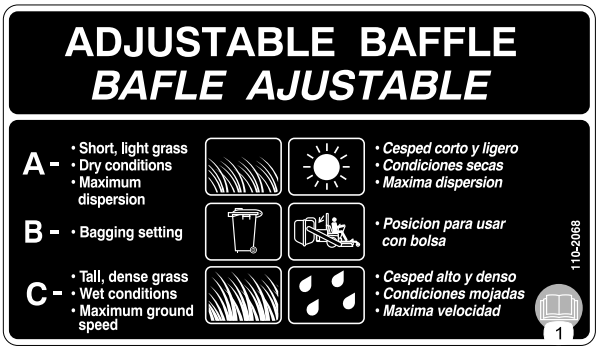


**110-2068**

1. Read the *Operator's Manual*.

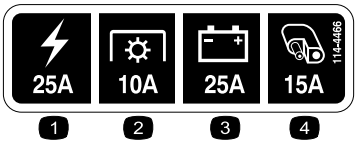


**114-4466**

1. Main, 25A
2. PTO, 10A
3. Charge, 25A
4. Auxiliary, 15A

**116-0205**

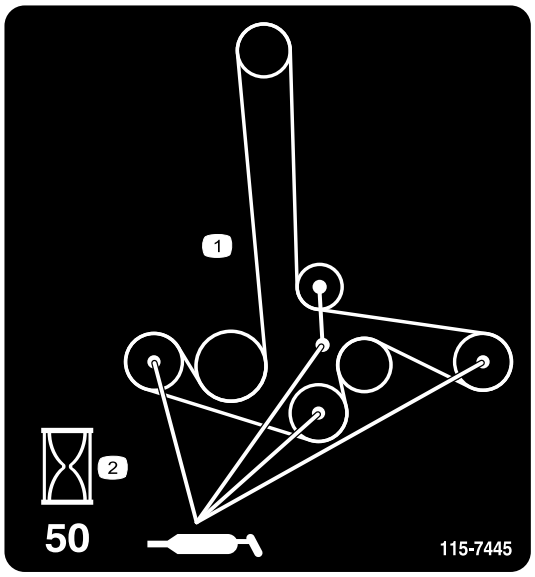


**115-7445**

1. Grease pulleys and spindles
2. Maintenance interval—50 hours

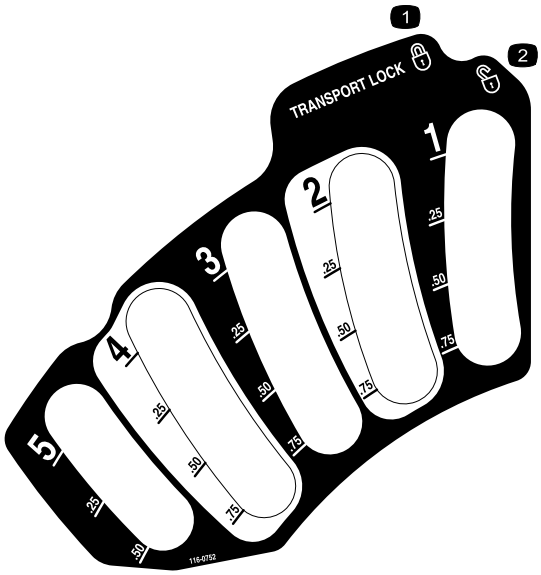


**116-0752**

1. Latch
2. Unlatch

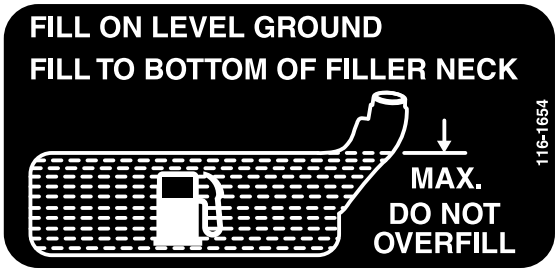


**116-1654**

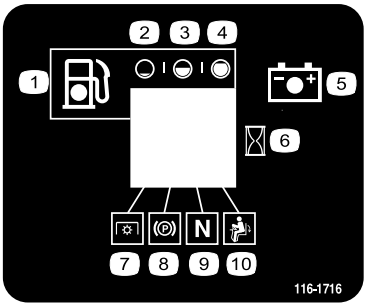


**116-1716**

1. Fuel
2. Empty
3. Half
4. Full
5. Battery
6. Hour meter
7. PTO
8. Parking brake
9. Neutral
10. Operator presence switch

**116-3303**

**116-4858**

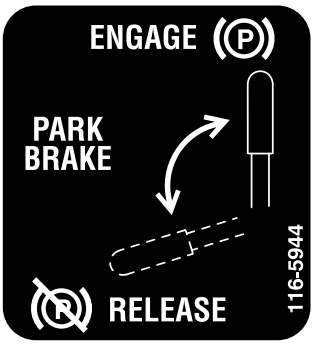


**116-5944**

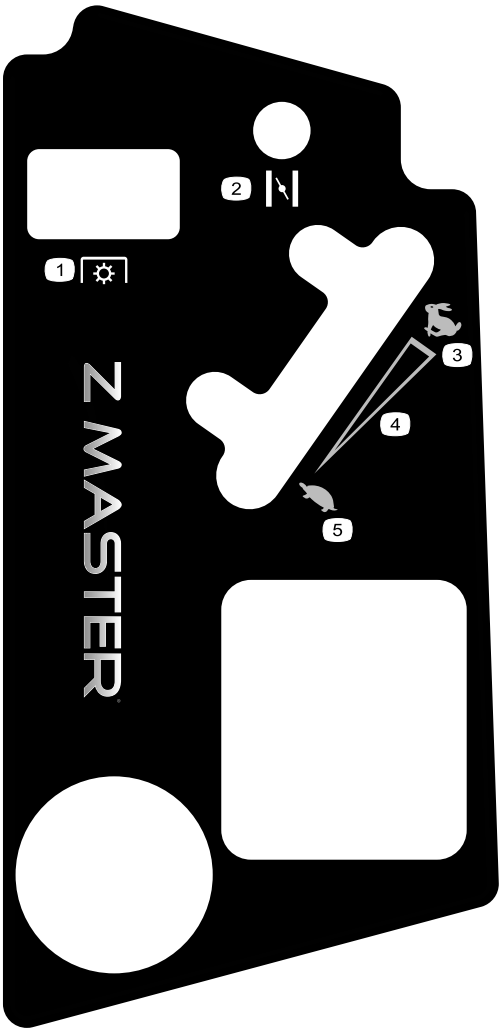


**121-7551**

1. Power Take-off (PTO)
2. Choke
3. Fast
4. Continuous variable setting
5. Slow

**Battery Symbols**

Some or all of these symbols are on your battery

1. Explosion hazard
2. No fire, open flame, or smoking.
3. Caustic liquid/chemical burn hazard
4. Wear eye protection
5. Read the *Operator's Manual.*
6. Keep bystanders a safe distance from the battery.
7. Wear eye protection; explosive gases can cause blindness and other injuries
8. Battery acid can cause blindness or severe burns.
9. Flush eyes immediately with water and get medical help fast.
10. Contains lead; do not discard.

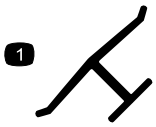


**Manufacturer's Mark**

1. Indicates the blade is identified as a part from the original machine manufacturer.

**116-0157**

1. Only use recommended hydro oil

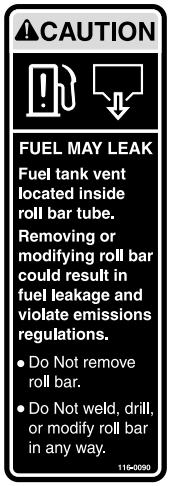


**116-0090**

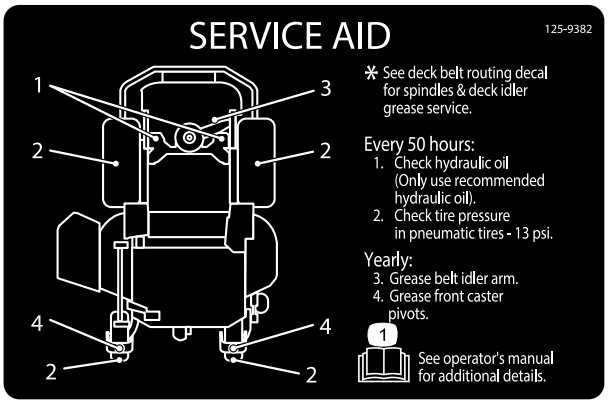


**125–9382**

1. Read the *Operator's Manual* for more information on servicing the machine.

**109-7069**

# Product Overview

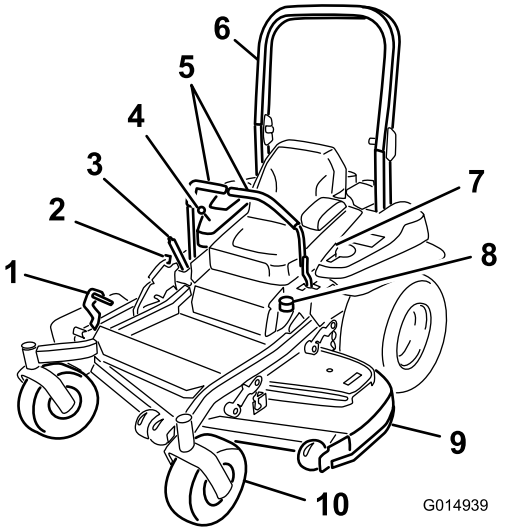


**Figure 4**

1. Height-of-cut deck lift pedal
2. Transport lock
3. Parking brake lever
4. Controls
5. Motion control levers
6. Roll bar
7. Seat belt
8. Fuel cap
9. Mower deck
10. Caster wheel

# Controls

Become familiar with all the controls before you start the engine and operate the machine (Figure 4 and Figure 5).

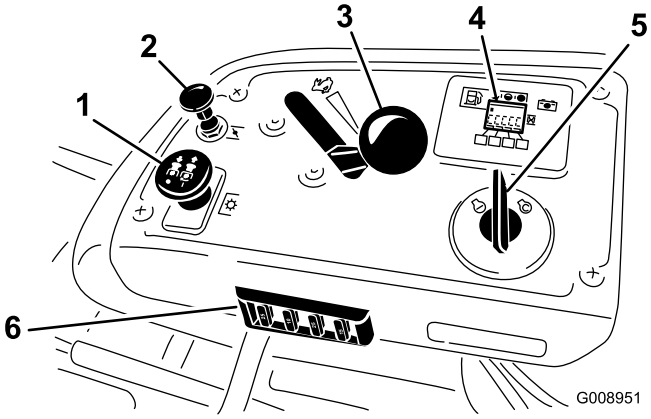


**Figure 5**

1. PTO Switch
2. Choke
3. Throttle control
4. Hour meter/Safety-interlock display
5. Ignition switch
6. Fuses

## Hour Meter

The hour meter records the number of hours the engine has operated. It operates when the engine is running. Use these times for scheduling regular maintenance (Figure 6).

## Fuel Gauge

The fuel gauge is located with the hour meter and the bars light up when the ignition switch is on (Figure 6).

The indicator light appears when the fuel level is low (approximately one gallon remaining in the fuel tank).

## Safety Interlock Indicators

There are symbols on the hour meter and the indicate with a black triangle that the interlock component is in the correct position (Figure 6).

## Battery Indicator Light

If the ignition key is turned to the **On** position for a few seconds, the battery voltage will be displayed in the area where the hours are normally displayed.

The battery light turns on when the ignition is turned on and when the charge is below the correct operating level (Figure 6).

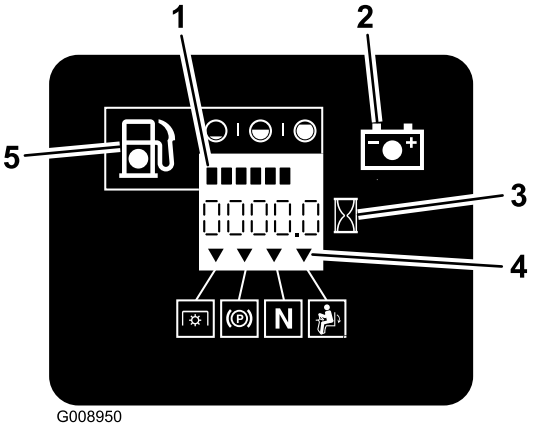


**Figure 6**

1. Fuel gauge (bars)
2. Battery light
3. Hour meter
4. Safety interlock symbols
5. Low fuel indicator light

## Throttle Control

The throttle control is variable between the **Fast** and **Slow** positions.

## Blade Control Switch (PTO)

The blade control switch (PTO) is used to engage the electric clutch and drive the mower blades. Pull the switch up to engage the blades and release. To disengage the blades, push the blade control switch (PTO) down or move a motion control lever into the neutral lock position.

## Ignition Switch

This switch is used to start the mower engine and has 3 positions: **Start, Run,** and **Off**.

## Motion Control Levers

The motion control levers are used to drive the machine forward, reverse, and turn either direction.

## Neutral Lock Position

The neutral lock position is used with the safety interlock system to engage and to determine neutral position.

## Fuel Shut-off Valve

Close the fuel shut-off valve (under the seat) when transporting or storing the mower.

## Attachments/Accessories

A selection of Toro approved attachments and accessories is available for use with the machine to enhance and expand its capabilities. Contact your Authorized Service Dealer or Distributor or go to www.Toro.com for a list of all approved attachments and accessories.

# Specifications

**Note:** Specifications and design are subject to change without notice.

**Width:**

| | **72 inch Deck** |
|---|---|
| Without Deck | 150.1 cm (59.1 inches) |
| Deflector Up | 187 cm (73.6 inches) |
| Deflector Down | 222.4 cm (87.6 inches) |

**Length:**

| | **72 inch Deck** |
|---|---|
| Roll Bar - Up | 218.7 cm (86.1 inches) |
| Roll Bar - Down | 223 cm (87.8 inches) |

**Height:**

| **Roll Bar - Up** | **Roll Bar - Down** |
|---|---|
| 179.1 cm (70.5 inches) | 118.9 cm (46.8 inches) |

**Weight:**

| Model | Weight |
|---|---|
| 74959 | 588 kg (1296 lbs) |

# Operation

**Note:** Determine the left and right sides of the machine from the normal operating position.

## Adding Fuel

- For best results, use only clean, fresh (less than 30 days old), unleaded gasoline with an octane rating of 87 or higher ((R+M)/2 rating method).
- **Ethanol**: Gasoline with up to 10% ethanol (gasohol) or 15% MTBE (methyl tertiary butyl ether) by volume is acceptable. Ethanol and MTBE are not the same. Gasoline with 15% ethanol (E15) by volume is not approved for use. **Never use gasoline that contains more than 10% ethanol by volume**, such as E15 (contains 15% ethanol), E20 (contains 20% ethanol), or E85 (contains up to 85% ethanol ). Using unapproved gasoline may cause performance problems and/or engine damage which may not be covered under warranty.
- **Do not** use gasoline containing methanol.
- **Do not** store fuel either in the fuel tank or fuel containers over the winter unless a fuel stabilizer is used.
- **Do not** add oil to gasoline.

**⚠ DANGER**

**In certain conditions, gasoline is extremely flammable and highly explosive. A fire or explosion from gasoline can burn you and others and can damage property.**

- **Fill the fuel tank outdoors, in an open area, when the engine is cold. Wipe up any gasoline that spills.**
- **Never fill the fuel tank inside an enclosed trailer.**
- **Do not fill the fuel tank completely full. Add gasoline to the fuel tank until the level is 6 to 13 mm (1/4 to 1/2 inch) below the bottom of the filler neck. This empty space in the tank allows gasoline to expand.**
- **Never smoke when handling gasoline, and stay away from an open flame or where gasoline fumes may be ignited by a spark.**
- **Store gasoline in an approved container and keep it out of the reach of children. Never buy more than a 30-day supply of gasoline.**
- **Do not operate without entire exhaust system in place and in proper working condition.**

**⚠ DANGER**

**In certain conditions during fueling, static electricity can be released causing a spark which can ignite the gasoline vapors. A fire or explosion from gasoline can burn you and others and can damage property.**

- **Always place gasoline containers on the ground away from your vehicle before filling.**
- **Do not fill gasoline containers inside a vehicle or on a truck or trailer bed because interior carpets or plastic truck bed liners may insulate the container and slow the loss of any static charge.**
- **When practical, remove gas-powered equipment from the truck or trailer and refuel the equipment with its wheels on the ground.**
- **If this is not possible, then refuel such equipment on a truck or trailer from a portable container, rather than from a gasoline dispenser nozzle.**
- **If a gasoline dispenser nozzle must be used, keep the nozzle in contact with the rim of the fuel tank or container opening at all times until fueling is complete.**

**⚠ WARNING**

**Gasoline is harmful or fatal if swallowed. Long-term exposure to vapors can cause serious injury and illness.**

- **Avoid prolonged breathing of vapors.**
- **Keep face away from nozzle and gas tank or conditioner bottle opening.**
- **Avoid contact with skin; wash off spillage with soap and water.**

### Using Stabilizer/Conditioner

Use a fuel stabilizer/conditioner in the machine to provide the following benefits:

- Keeps gasoline fresh during storage of 90 days or less. For longer storage it is recommended that the fuel tank be drained.
- Cleans the engine while it runs
- Eliminates gum-like varnish buildup in the fuel system, which causes hard starting

  **Important: Do not use fuel additives containing methanol or ethanol.**

  Add the correct amount of gas stabilizer/conditioner to the gas.

  **Note:** A fuel stabilizer/conditioner is most effective when mixed with fresh gasoline. To minimize the chance

of varnish deposits in the fuel system, use fuel stabilizer at all times.

### Filling the Fuel Tank

1. Shut the engine off and set the parking brake.
2. Clean around the fuel tank cap and remove the cap. Add unleaded regular gasoline to the fuel tank, until the level is 6 to 13 mm (1/4 to 1/2 inch) below the bottom of the filler neck. This space in the tank allows the gasoline to expand. Do not fill the fuel tank completely full.
3. Install the fuel tank cap securely. Wipe up any gasoline that may have spilled.

## Checking the Engine Oil Level

Before you start the engine and use the machine, check the oil level in the engine crankcase; refer to Checking the Engine-oil Level (page 33).

## Breaking In a New Machine

New engines take time to develop full power. Mower decks and drive systems have higher friction when new, placing additional load on the engine. Allow 40 to 50 hours of break-in time for new machines to develop full power and best performance.

## Using the Rollover Protection System (ROPS)

**⚠ WARNING**

**To avoid injury or death from rollover: keep the roll bar in the fully raised locked position and use the seat belt.**

**Ensure that the seat is secured to the machine.**

**⚠ WARNING**

**There is no rollover protection when the roll bar is in the down position.**

- **Lower the roll bar only when absolutely necessary.**
- **Do not wear the seat belt when the roll bar is in the down position.**
- **Drive slowly and carefully.**
- **Raise the roll bar as soon as clearance permits.**
- **Check carefully for overhead clearances (i.e. branches, doorways, electrical wires) before driving under any objects and do not contact them.**

**Important: Lower the roll bar only when absolutely necessary.**

**Important: Ensure that the seat is secured to the machine.**

1. To lower the roll bar, apply forward pressure to the upper part of the roll bar.
2. Pull both knobs out and rotate them 90° so that they are not engaged (Figure 7).
3. Lower the roll bar to the down position (Figure 7).

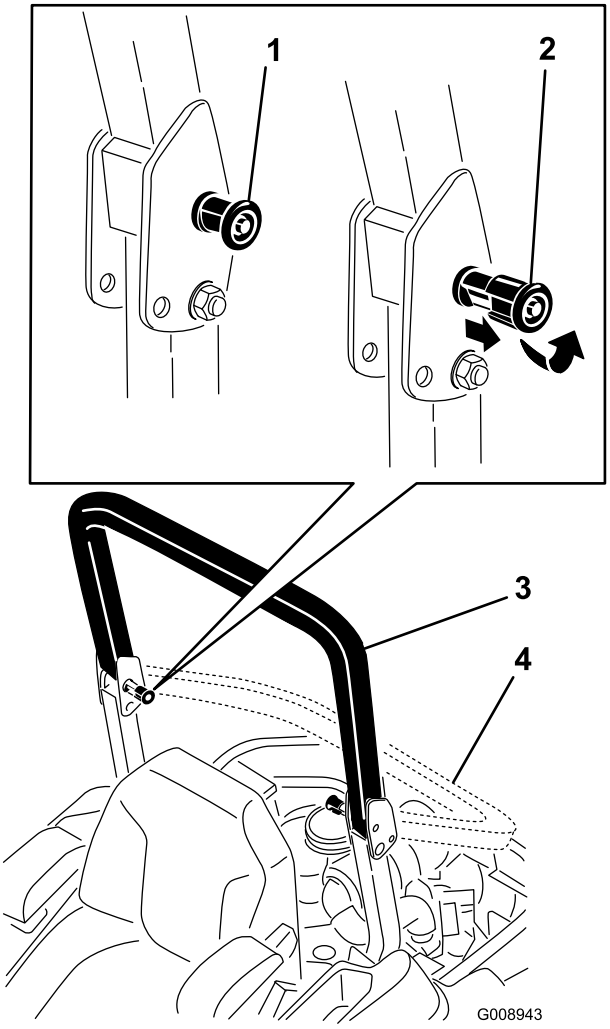


**Figure 7**

1. ROPS knob
2. Pull ROPS knob out and rotate 90 degrees
3. Roll bar in the upright position
4. Roll bar in the folded position

4. To raise the roll bar, raise the roll bar to the operate position, rotate the knobs so they move partially into the grooves (Figure 7).
5. Raise the roll bar to the full upright position while pushing on the upper roll bar and the pins will snap into position when the holes align with the pins (Figure 7). Push on the roll bar and ensure that both pins are engaged.

**Important:** **Always use the seat belt with the roll bar in the fully raised position.**

# Think Safety First

Please read all safety instructions and symbols in the safety section. Knowing this information could help you or bystanders avoid injury.

**⚠ DANGER**

**Operating on wet grass or steep slopes can cause sliding and loss of control.**

**Wheels dropping over edges can cause rollovers, which may result in serious injury, death or drowning.**

**There is no rollover protection when the roll bar is down.**

**Always keep the roll bar in the fully raised and locked position and use the seat belt.**

**Read and follow the rollover protection instructions and warnings.**

**To avoid loss of control and possibility of rollover:**

- **Do not operate near drop-offs or near water.**
- **Do not operate on slopes greater than 15 degrees.**
- **Reduce speed and use extreme caution on slopes.**
- **Avoid sudden turns or rapid speed changes.**

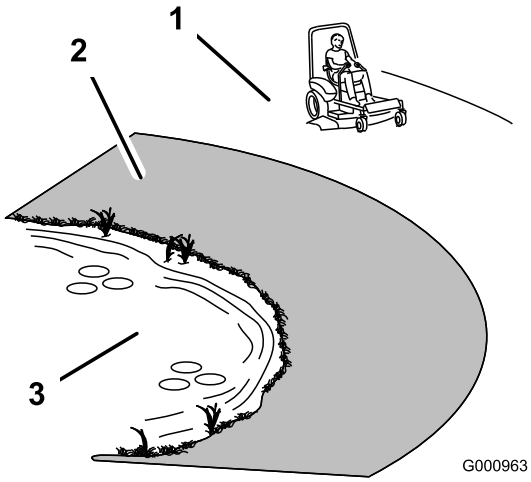


**Figure 8**

1. Safe Zone-use the Z Master here on slopes less than 15 degrees or flat areas.
2. Danger Zone- use a walk behind mower and/or a hand trimmer on slopes greater than 15 degrees, near drop-offs and water.
3. Water

**⚠ CAUTION**

**This machine produces sound levels in excess of 85 dBA at the operators ear and can cause hearing loss through extended periods of exposure.**

**Wear hearing protection when operating this machine.**

The use of protective equipment for eyes, ears, feet, and head is recommended.

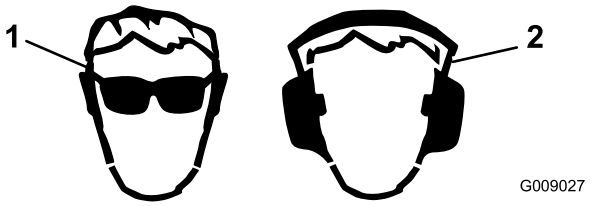


**Figure 9**

1. Wear safety glasses
2. Wear hearing protection

# Operating the Parking Brake

Always set the parking brake when you stop the machine or leave it unattended.

## Setting the Parking Brake

**⚠ WARNING**

**Parking brake may not hold machine parked on a slope and could cause personal injury or property damage.**

**Do not park on slopes unless wheels are chocked or blocked**

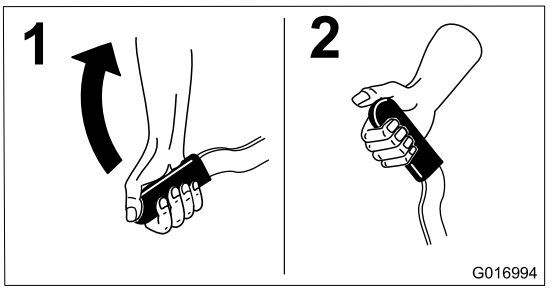


**Figure 10**

## Releasing the Parking Brake

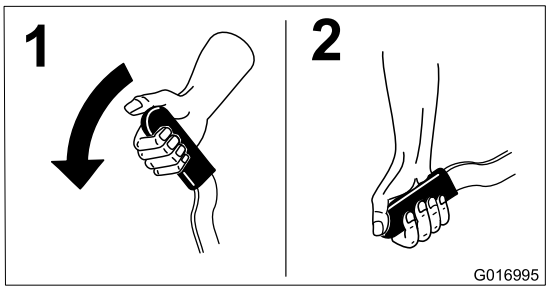


Figure 11

# Operating the Mower Blade Control Switch (PTO)

The blade control switch (PTO) starts and stops the mower blades and any powered attachments.

## Engaging the Blade Control Switch (PTO)

**Note:** Engaging the blade control switch (PTO) with the throttle position at half or less will cause excessive wear to the drive belts.

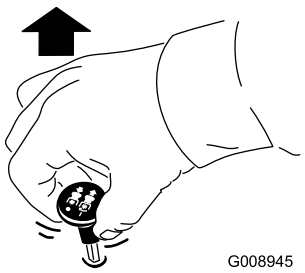


Figure 12

## Disengaging the Blade Control Switch (PTO)

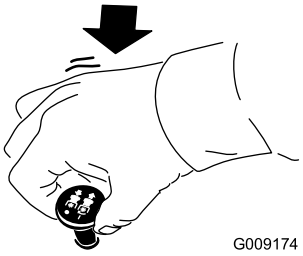


Figure 13

# Operating the Throttle

The throttle control can be moved between the **Fast** and **Slow** positions (Figure 14).

Always use the fast position when turning on the mower deck with the blade control switch (PTO).

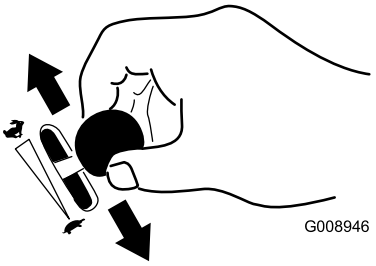


Figure 14

# Operating the Ignition Switch

1. Turn the ignition key to the Start position (Figure 15). When the engines starts, release the key.

   **Important: Do not engage starter for more than 5 seconds at a time. If the engine fails to start allow a 15 second cool-down period between attempts. Failure to follow these instructions can burn out the starter motor.**

   **Note:** Additional starting cycles may be required when starting the engine for the first time after the fuel system has been without fuel completely.

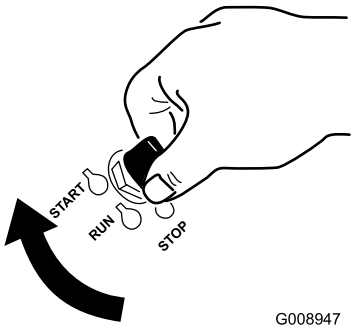


Figure 15

2. Turn the ignition key to stop to stop the engine.

# Using the Fuel Shut-Off Valve

The fuel shut-off valve is located under the seat. Move the seat forward to access it.

Close the fuel shut-off valve for transport, maintenance, and storage.

Ensure the fuel shut-off valve is open when starting the engine.

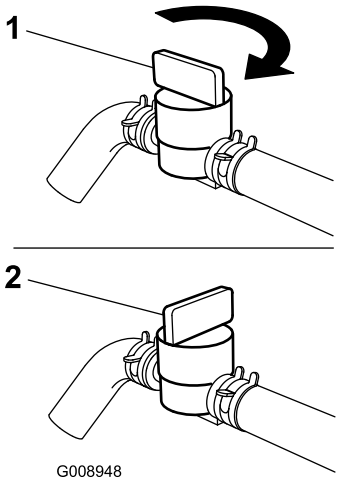


**Figure 16**

1. On
2. Off

# Starting and Stopping the Engine

## Starting the Engine

1. Raise the ROPS up and lock into place, sit on the seat and fasten the seat belt.
2. Move the motion controls to neutral locked position.
3. Set the parking brake; refer to Setting the Parking Brake (page 16).
4. Move the blade control switch (PTO) to the off position (Figure 17).
5. Move the throttle lever midway between the slow and fast positions.

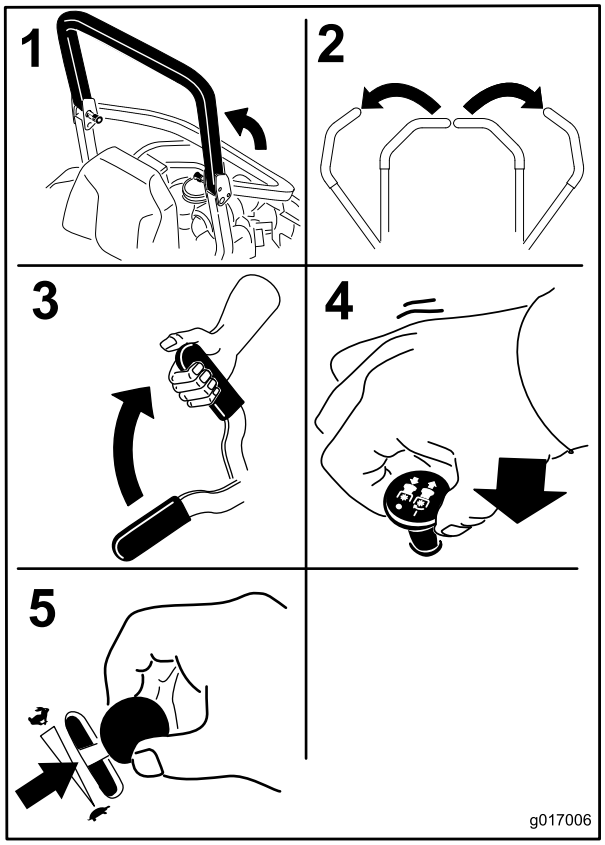


**Figure 17**

6. Turn the ignition key to the Start position (Figure 15). When the engines starts, release the key.

   **Important: Do not engage starter for more than 5 seconds at a time. If the engine fails to start allow a 15 second cool-down period between attempts. Failure to follow these instructions can burn out the starter motor.**

   **Note:** Additional starting cycles may be required when starting the engine for the first time after the fuel system has been without fuel completely.

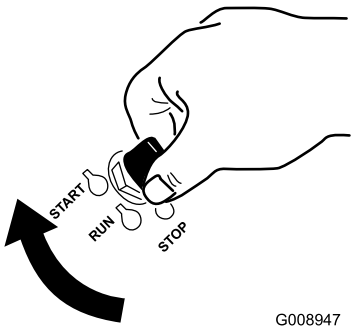


**Figure 18**

1. Off
2. Run
3. Start

## Stopping the Engine

**⚠ CAUTION**

**Children or bystanders may be injured if they move or attempt to operate the machine while it is unattended.**

**Always remove the ignition key and set the parking brake when leaving the machine unattended, even if just for a few minutes.**

Let the engine idle at slow throttle (turtle) for 60 seconds before turning the ignition switch off.

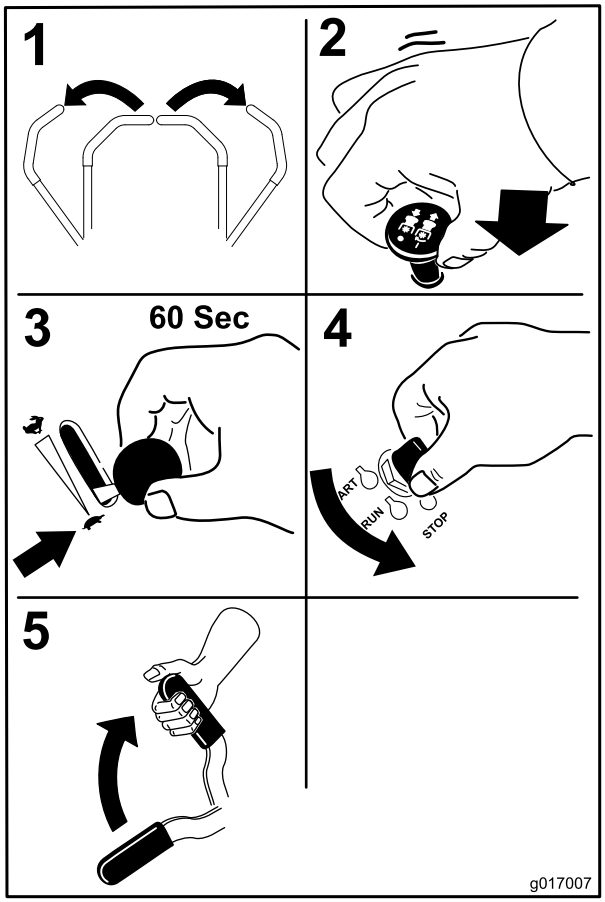


**Figure 19**

**Important:** **Make sure that the fuel shut off valve is closed before transporting or storing the machine, as fuel leakage may occur. Set the parking brake before transporting. Make sure to remove the key as the fuel pump may run and cause the battery to lose charge.**

# The Safety Interlock System

**⚠ CAUTION**

**If safety interlock switches are disconnected or damaged the machine could operate unexpectedly causing personal injury.**

- **Do not tamper with the interlock switches.**
- **Check the operation of the interlock switches daily and replace any damaged switches before operating the machine.**

## Understanding the Safety Interlock System

The safety interlock system is designed to prevent the engine from starting unless:

- The parking brake is engaged.
- The blade control switch (PTO) is disengaged.
- The motion control levers are in the neutral locked position

The safety interlock system also is designed to stop the engine when the traction controls are moved from the locked position with the parking brake engaged or if you rise from the seat when the PTO is engaged.

The hour meter has symbols to notify the user when the interlock component is in the correct position. When the component is in the correct position, a triangle will light up in the corresponding square.

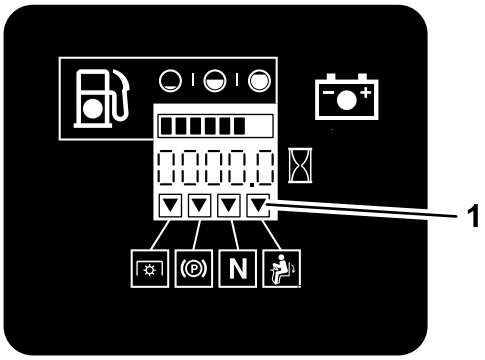


**Figure 20**

1. Triangles light up when the interlock components are in the correct position

## Testing the Safety Interlock System

**Service Interval:** Before each use or daily

Test the safety interlock system before you use the machine each time. If the safety system does not operate as described below, have an Authorized Service Dealer repair the safety system immediately.

1. Sitting on the seat, engage the parking brake and move the blade control switch (PTO) to on. Try starting the engine; the engine should not crank.
2. Sitting on the seat, engage the parking brake and move the blade control switch (PTO) to off. Move either motion control lever (out of neutral locked position). Try starting the engine; the engine should not crank. Repeat for other control lever.
3. Sitting on the seat, engage the parking brake, move the blade control switch (PTO) to off and move the motion control levers to neutral lock position. Now start the engine. While the engine is running, release the parking brake, engage the blade control switch (PTO) and rise slightly from the seat; the engine should stop.
4. Sitting on the seat, engage the parking brake, move the blade control switch (PTO) to off and move the motion control levers to neutral lock position. Now start the engine. While the engine is running, center either motion control and move (forward or reverse); the engine should stop. Repeat for other motion control.
5. Sitting on the seat, disengage the parking brake, move the blade control switch (PTO) to off and move the motion control levers to neutral lock position. Try starting the engine; the engine should not crank.

# Driving Forward or Backward

The throttle control regulates the engine speed as measured in rpm (revolutions per minute). Place the throttle control in the fast position for best performance. Always operate in the full throttle position when mowing.

**⚠ CAUTION**

**Machine can spin very rapidly. Operator may lose control of machine and cause personal injury or damage to machine.**

- **Use caution when making turns.**
- **Slow the machine down before making sharp turns.**

## Using the Motion Control Levers

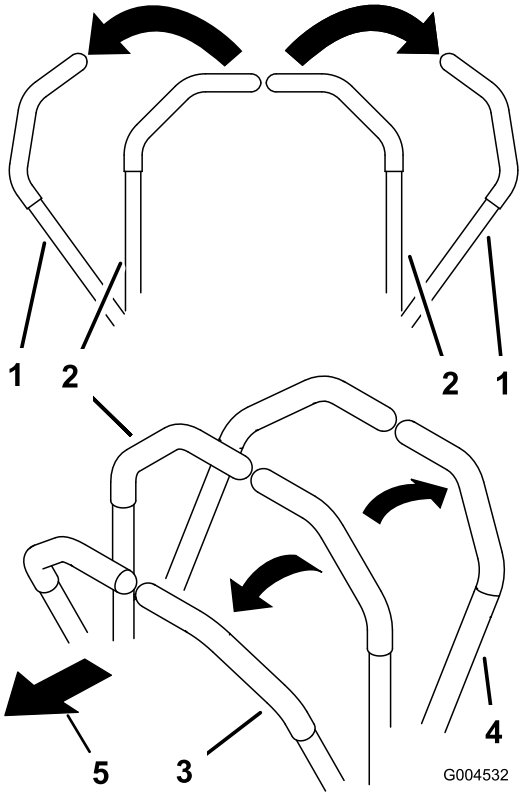


**Figure 21**

1. Motion control lever-neutral lock position
2. Center, unlocked position
3. Forward
4. Backward
5. Front of machine

## Driving Forward

**Note:** The engine will kill if the traction control levers are moved with the parking brake engaged.

To stop, pull the motion control levers to the neutral position.

1. Release the parking brake; refer to Releasing the Parking Brake (page 17).
2. Move the levers to the center, unlocked position.
3. To go forward, slowly push the motion control levers forward (Figure 22).

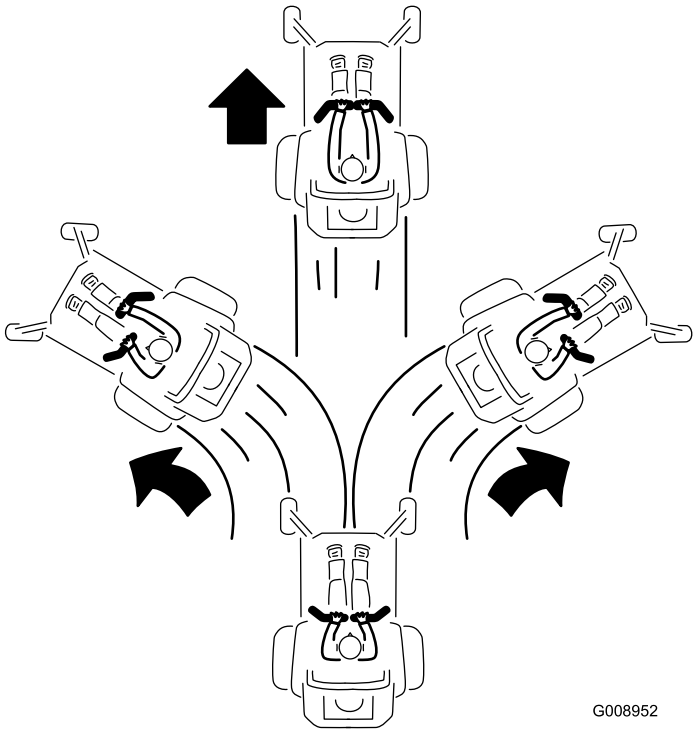


Figure 22

## Driving Backward

1. Move the levers to the center, unlocked position.
2. To go backward, slowly pull the motion control levers rearward (Figure 23).

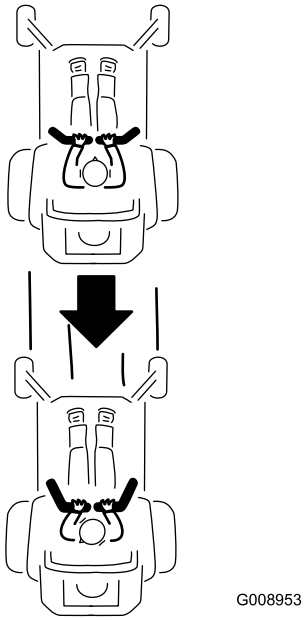


Figure 23

# Stopping the Machine

To stop the machine, move the traction control levers to neutral and move to locked position, disengage the power take off (blade control switch (PTO), and turn the ignition key to the off position.

Set the parking brake when you leave the machine; refer to Setting the Parking Brake (page 16). Remove the key from the ignition switch.

**⚠ CAUTION**

**Children or bystanders may be injured if they move or attempt to operate the machine while it is unattended.**

**Always remove the ignition key and set the parking brake when leaving the machine unattended, even if just for a few minutes.**

# Adjusting the Height of Cut

## Using the Transport Lock

The transport lock has 2 positions and is used with the deck lift pedal. There is a lock position and a unlock position for the transport position. The transport lock is used with the deck lift pedal. Refer to Figure 24.

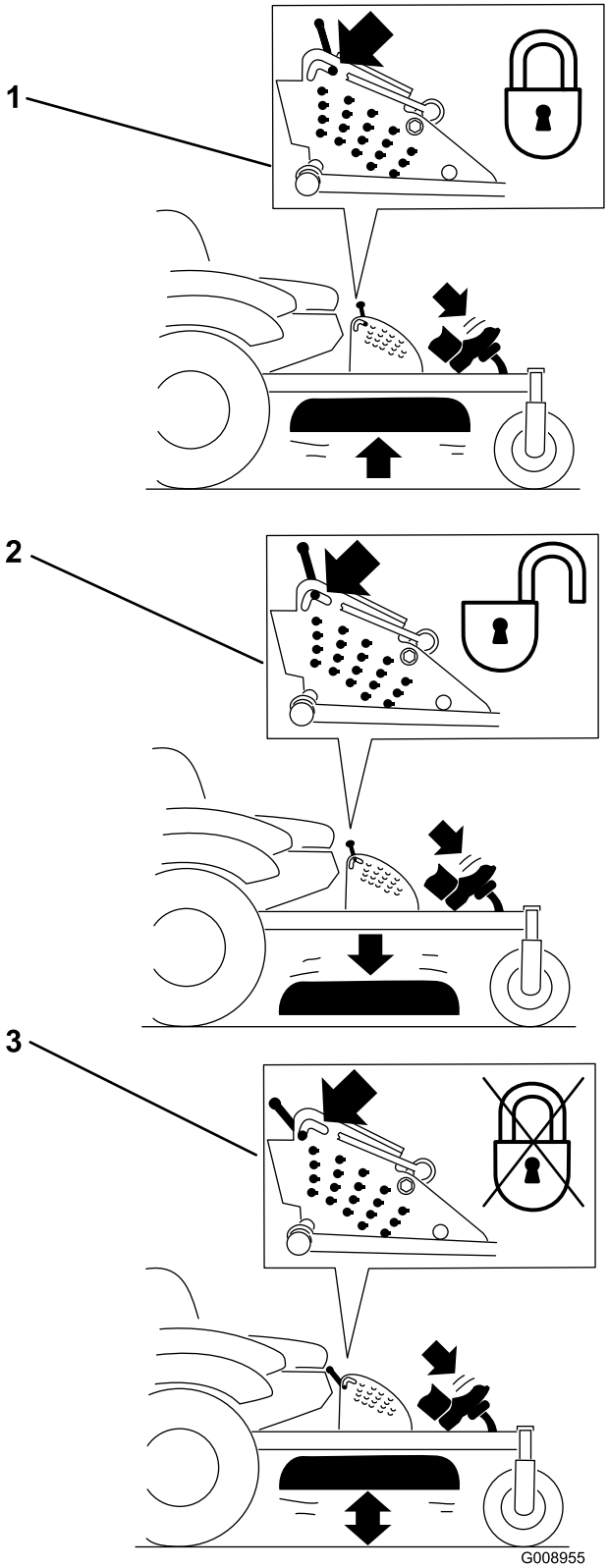


**Figure 24**

Transport Lock Positions

1. Transport lock
2. Lock position—mower deck will lock into transport position
3. Unlock position—does not lock the mower deck into transport position

## Adjusting the Height-of-Cut Pin

The height-of-cut is adjusted from 25 to 140 mm (1 to 5-1/2 inches) in 6 mm (1/4 inch) increments by relocating the clevis pin into different hole locations.

1. Move the transport lock to the lock position.
2. Push on the deck lift pedal with your foot and raise the mower deck to the transport position (also the 140 mm (5-1/2 inch) cutting height position) (Figure 25).
3. To adjust, rotate the pin 90 degrees and remove the pin from the height-of-cut bracket (Figure 25).
4. Select a hole in the height-of-cut bracket corresponding to the height-of-cut desired and, insert the pin (Figure 25).
5. Push on the deck lift, pull back on the transport lock, and slowly lower the mower deck.

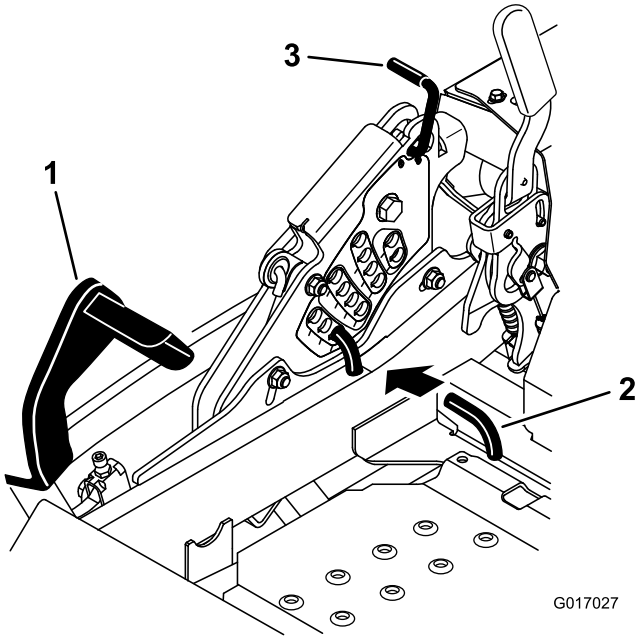


**Figure 25**

1. Deck lift pedal
2. Cut of height pin
3. Transport lock

# Adjusting the Anti-scalp Rollers

Whenever you change the height-of-cut, it is recommended to adjust the height of the anti-scalp rollers.

1. Disengage the blade-control switch (PTO), move the motion-control levers to the neutral-locked position, and set the parking brake.
2. Stop the engine, remove the key, and wait for all moving parts to stop before leaving the operating position.
3. Adjust the anti-scalp rollers as shown in Figure 26, Figure 27, and Figure 28.

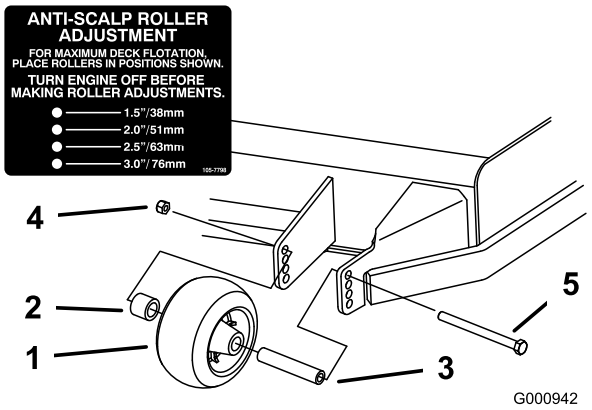


**Figure 26**

1. Anti-scalp roller
2. Spacer
3. Bushing
4. Flange nut
5. Bolt

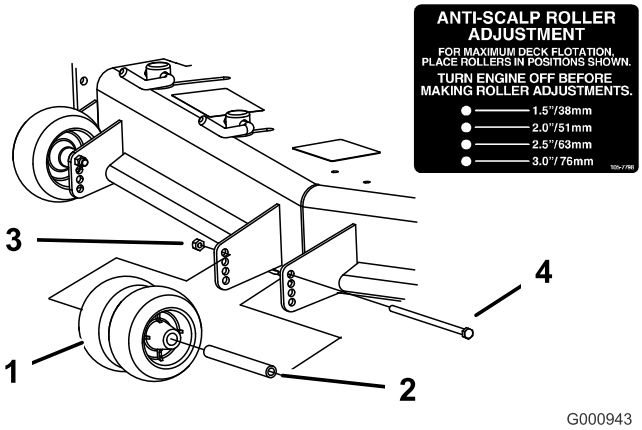


**Figure 27**

1. Anti-scalp roller
2. Bushing
3. Flange nut
4. Bolt

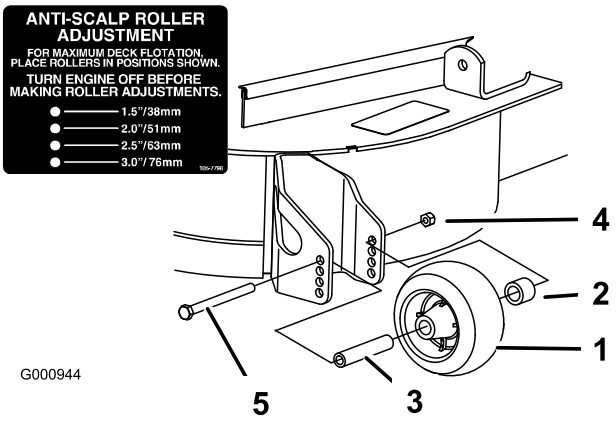


**Figure 28**

1. Anti-scalp roller
2. Spacer
3. Bushing
4. Flange nut
5. Bolt

# Adjusting the Flow Baffle Cam Locks

This procedure is applicable only to machines with the flow baffle locks. Certain models will have nuts and bolts in-place of the flow baffle locks and can be adjusted the same.

The mower discharge flow can be adjusted for different types of mowing conditions. Position the cam locks and baffle to give the best quality of cut.

1. Disengage the blade control switch (PTO), move the motion control levers to the neutral locked position, and set the parking brake.
2. Stop the engine, remove the key, and wait for all moving parts to stop before leaving the operating position.
3. To adjust the cam locks, swing the lever up to loosen the cam lock (Figure 29).
4. Adjust the baffle and cam locks in the slots to the desired discharge flow.
5. Swing the lever back over to tighten the baffle and cam locks (Figure 29).
6. If the cam locks do not lock the baffle into place or it is too tight, loosen the lever and then rotate the cam lock. Adjust the cam lock until the desired locking pressure is achieved.

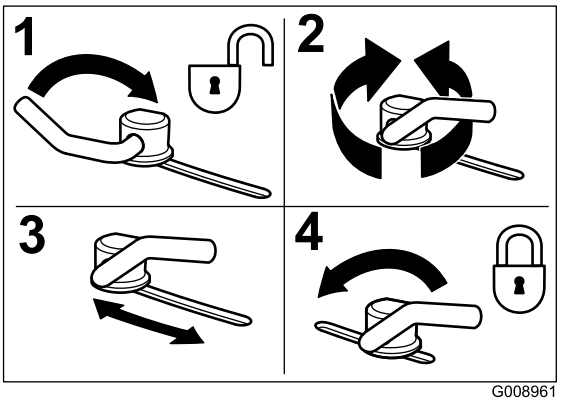


**Figure 29**

1. Unlock lever
2. Rotate the cam lock to increase or decrease locking pressure
3. Position the baffle
4. Lock lever

# Positioning the Flow Baffle

The following figures are only recommendations for use. Adjustments will vary by grass type, moisture content, and height of grass.

**Note:** If the engine power draws down and the mower ground speed is the same, open up the baffle.

## Position A

This is the full rear position. The suggested use for this position is a follows.

- Use for short, light grass mowing conditions.
- Use in dry conditions.
- For smaller grass clippings.
- Propels grass clippings farther away from the mower.

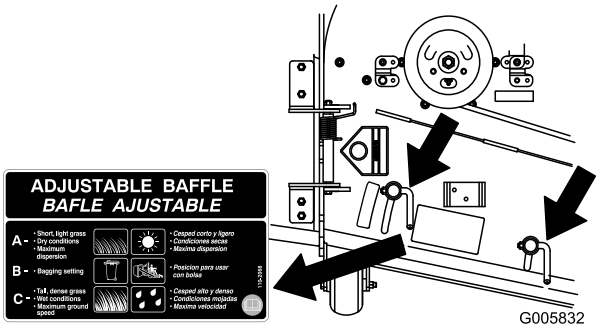


Figure 30

## Position B

Use this position when bagging. Always align it with the blower opening.

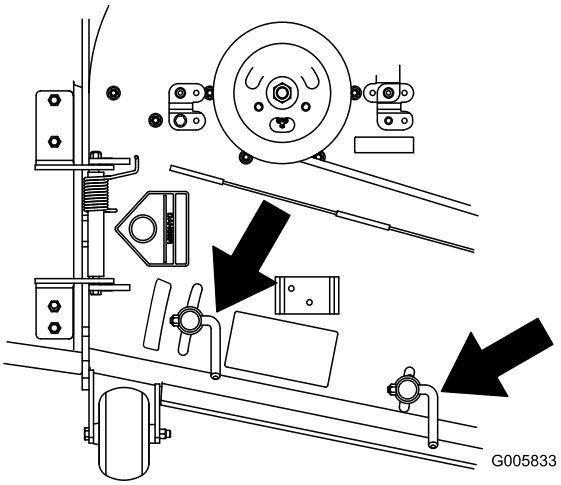


Figure 31

## Position C

This is the full open position. The suggested use for this position is as follows.

- Use in tall, dense grass mowing conditions.
- Use in wet conditions.
- Lowers the engine power consumption.
- Allows increased ground speed in heavy conditions.
- This position is similar to the benefits of the Toro SFS mower.

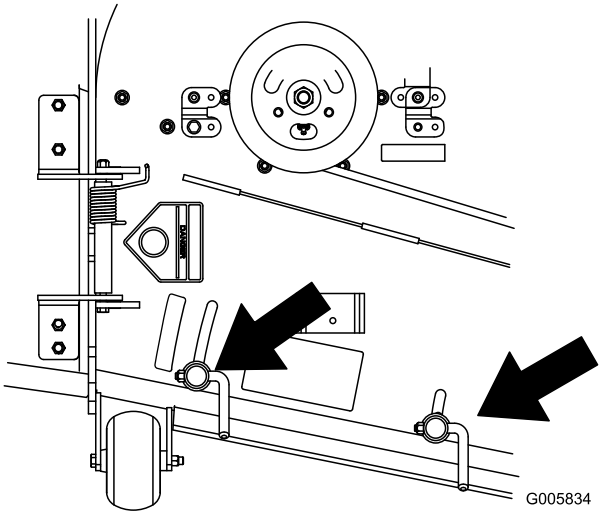


Figure 32

# Positioning the Seat

The seat can move forward and backward. Position the seat where you have the best control of the machine and are most comfortable.

To adjust, move the lever sideways to unlock seat (Figure 33).

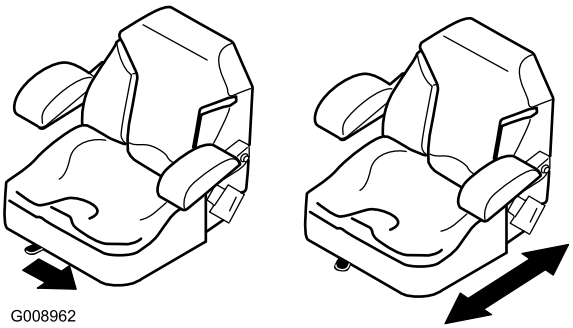


Figure 33

# Using the Drive Wheel Release Valves

**⚠ WARNING**

**Hands may become entangled in the rotating drive components below the engine deck, which could result in serious injury.**

**Stop the engine, remove the key, and allow all moving parts to stop before accessing the drive wheel release valves.**

**⚠ WARNING**

**The engine and hydraulic drive units can become very hot. Touching a hot engine or hydraulic drive units can cause severe burns.**

**Allow the engine and hydraulic drive units to cool completely before accessing the drive wheel release valves.**

The drive wheel release valves are located in the back of each hydraulic drive unit, under the seat.

**Note:** Make sure the release valves are in the fully horizontal position when operating the machine or severe damage to the hydraulic system can occur.

1. Disengage the PTO (blade control switch) and turn the ignition key to off. Move the levers to neutral locked position and apply parking brake. Remove the key.
2. Rotate the release valve levers vertically to push the machine. This allows hydraulic oil to by-pass the pump enabling the wheels to turn (Figure 34).
3. Disengage parking brake before pushing.
4. Rotate the release valve levers horizontally to run the machine (Figure 34).

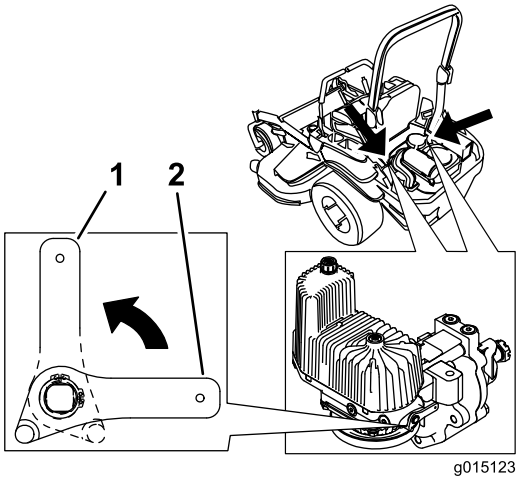


**Figure 34**

1. Vertical to push the machine
2. Horizontal to run the machine

# Using the Side Discharge

The mower has a hinged grass deflector that disperses clippings to the side and down toward the turf.

**⚠ DANGER**

**Without a grass deflector, discharge cover, or complete grass catcher assembly mounted in place, you and others are exposed to blade contact and thrown debris. Contact with rotating mower blade(s) and thrown debris will cause injury or death.**

- **Never remove the grass deflector from the mower because the grass deflector routes material down toward the turf. If the grass deflector is ever damaged, replace it immediately.**
- **Never put your hands or feet under the mower.**
- **Never try to clear the discharge area or mower blades unless you move the power take off (blade control switch (PTO) to the off position, rotate the ignition key to off and remove the key.**
- **Make sure the grass deflector is in the down position.**

# Loading Machines

**Important: Do not attempt to turn the unit while on the ramp; you may lose control and drive off the side.**

Avoid sudden acceleration when driving up a ramp and sudden deceleration when backing down a ramp. Both maneuvers can cause the unit to tip backward.

**⚠ WARNING**

**Loading a unit onto a trailer or truck increases the possibility of backward tip-over and could cause serious injury or death.**

- **Use extreme caution when operating a unit on a ramp.**
- **Ensure that the ROPS is in the up position while using the seat belt when loading the machine. Ensure that the ROPS will clear the top of an enclosed trailer.**
- **Use only a single, full width ramp; Do not use individual ramps for each side of the unit.**
- **If individual ramps must be used, use enough ramps to create an unbroken ramp surface wider than the unit.**
- **Do not exceed a 15 degree angle between ramp and ground or between ramp and trailer or truck.**
- **Avoid sudden acceleration while driving unit up a ramp to avoid tipping backward.**
- **Avoid sudden deceleration while backing unit down a ramp to avoid tipping backward.**

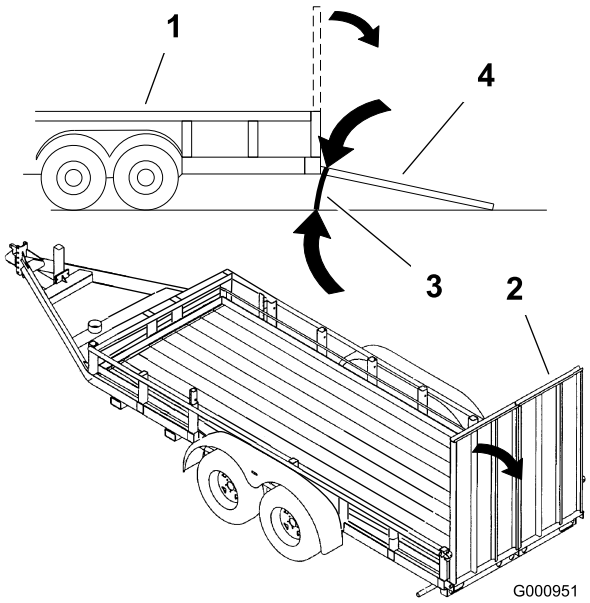


**Figure 35**

1. Trailer
2. Full width ramp
3. Not greater than 15 degrees
4. Full width ramp—side view

# Transporting Machines

Use a heavy-duty trailer or truck to transport the machine. Ensure that the trailer or truck has all necessary brakes, lighting, and marking as required by law. Please carefully read all the safety instructions. Knowing this information could help you, your family, pets or bystanders avoid injury.

**⚠ WARNING**

**Driving on the street or roadway without turn signals, lights, reflective markings, or a slow moving vehicle emblem is dangerous and can lead to accidents causing personal injury.**

**Do not drive machine on a public street or roadway.**

To transport the machine:

1. If using a trailer, connect it to the towing vehicle and connect the safety chains.
2. If applicable, connect the trailer brakes.
3. Load the machine onto the trailer or truck.
4. Stop the engine, remove the key, set the brake, and close the fuel valve.
5. Use the metal tie down loops on the machine to securely fasten the machine to the trailer or truck with straps, chains, cable, or ropes (Figure 36).

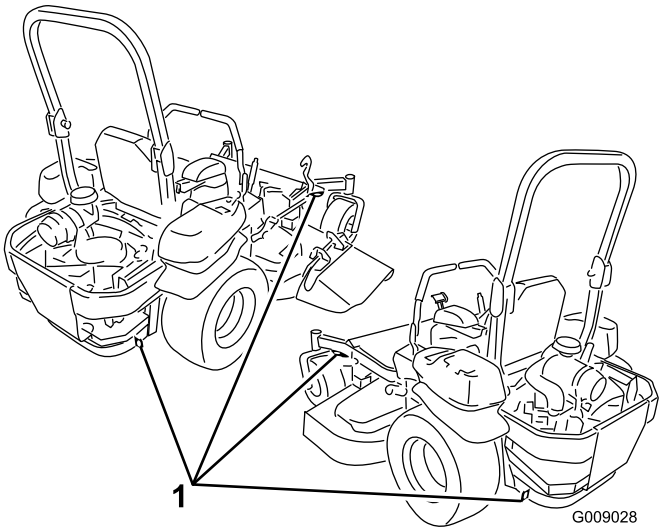


**Figure 36**

1. Traction unit tie down loops

# Operating Tips

## Maximizing Cutting Efficiency

For best mowing and maximum air circulation, operate the engine at the fast throttle position. Air is required to thoroughly cut grass clippings, so do not set the height of cut so low as to totally surround the mower by uncut grass. Always try to have one side of the mower free from uncut grass, which allows air to be drawn into the mower.

## Cutting a Lawn for the First Time

Cut grass slightly longer than normal to ensure the cutting height of the mower does not scalp any uneven ground. However, the cutting height used in the past is generally the best one to use. When cutting grass longer than six inches tall, you may want to cut the lawn twice to ensure an acceptable quality of cut.

## Cutting 1/3 of the Grass Blade

It is best to cut only about 1/3 of the grass blade. Cutting more than that is not recommended unless grass is sparse, or it is late fall when grass grows more slowly.

## Alternating Mowing Direction

Alternate mowing direction to keep the grass standing straight. This also helps disperse clippings, which enhances decomposition and fertilization.

## Mowing at Correct Intervals

Normally, mow every 4 days. However, grass grows at different rates at different times. So to maintain the same cutting height, which is a good practice, mow more often in early spring. As the grass growth rate slows in midsummer, mow less frequently. If you cannot mow for an extended period, first mow at a high cutting height; then mow again 2 days later at a lower height setting.

## Choosing the Best Speed

To improve cut quality, use a slower ground speed in certain conditions.

## Avoiding Cutting Too Low

If the cutting width of the mower is wider than the mower you previously used, raise the cutting height to ensure that uneven turf is not cut too short.

## Cutting Long Grass

If the grass is ever allowed to grow slightly longer than normal, or if it contains a high degree of moisture, raise the cutting height higher than usual and cut the grass at this setting. Then cut the grass again using the lower, normal setting.

## Stopping

If the you must stop the forward motion of the machine while mowing, a clump of grass clippings may drop onto the lawn. To avoid this, move onto a previously cut area with the blades engaged.

## Keeping the Underside of the Mower Clean

Clean clippings and dirt from the underside of the mower after each use. If grass and dirt build up inside the mower, cutting quality will eventually become unsatisfactory.

## Maintaining the Blade

Maintain a sharp blade throughout the cutting season because a sharp blade cuts cleanly without tearing or shredding the grass blades. Tearing and shredding turns grass brown at the edges, which slows growth and increases the chance of disease. Check the cutter blades daily for sharpness, and for any wear or damage. File down any nicks and sharpen the blades as necessary. If a blade is damaged or worn, replace it immediately with a genuine Toro replacement blade.

# Maintenance

## Recommended Maintenance Schedule(s)

| Maintenance Service Interval | Maintenance Procedure |
|---|---|
| After the first 8 hours | • Change the engine oil. |
| After the first 100 hours | • Check the wheel lug nut torque.<br>• Check the wheel hub slotted-nut torque.<br>• Check the park brake adjustment. |
| After the first 250 hours | • Change the hydraulic filters and hydraulic oil when using any type of oil. |
| Before each use or daily | • Check the safety system.<br>• Check the engine-oil level.<br>• Check the seat belt.<br>• Check the rollover protection system (ROPS) knobs.<br>• Clean the engine screen and the oil cooler.<br>• Check and clean the hydraulic units.<br>• Check the mower blades.<br>• Clean the mower deck. |
| Every 50 hours | • Grease the mower deck spindles and idler arm.<br>• Check the spark arrester (if equipped).<br>• Check the tire pressure.<br>• Inspect the belts for cracks and wear.<br>• Check the hydraulic oil level. |
| Every 100 hours | • Lubricate the mower deck lift pivots.<br>• Change the engine oil (more often in dirty or dusty conditions).<br>• Check and clean engine cooling fins and shrouds. |
| Every 150 hours | • Inspect the primary filter and the air-inlet screen. |
| Every 200 hours | • Change the engine-oil filter.<br>• Check, clean and regap the spark plug. |
| Every 250 hours | • Change the hydraulic filters and hydraulic oil when using Mobil® 1 oil (more often in dirty or dusty conditions). |
| Every 300 hours | • Replace the primary air filter (more often in dusty or sandy conditions).<br>• Check the inner air filter. |
| Every 500 hours | • Replace the fuel filter. (more often in dirty or dusty conditions).<br>• Check the wheel lug nut torque.<br>• Check the wheel hub slotted-nut torque.<br>• Adjust the caster pivot bearing.<br>• Check the park brake adjustment.<br>• Change the hydraulic filters and hydraulic oil when using Toro® HYPR-OIL™ 500 hydraulic oil (more often in dirty or dusty conditions). |
| Every 600 hours | • Replace the inner air filter. |
| Monthly | • Check the battery. |
| Yearly | • Grease the pump belt idler arm.<br>• Grease the front caster pivots (more often in dirty or dusty conditions).<br>• Repack the front caster wheel bearings (more often in dirty or dusty conditions).<br>• Lubricate the caster wheel hubs. |
| Yearly or before storage | • Paint chipped surfaces.<br>• Check all maintenance procedures listed above before storage. |

**Important:** **Refer to your engine operator's manual for additional maintenance procedures.**

**⚠ CAUTION**

**If you leave the key in the ignition switch, someone could accidently start the engine and seriously injure you or other bystanders.**

**Remove the key from the ignition before you do any maintenance.**

# *Lubrication*

## Lubricating the Machine

Grease more frequently when operating conditions are extremely dusty or sandy.

**Grease Type:** No. 2 general-purpose lithium-based or molybdenum-based grease

1. Disengage the blade control switch (PTO), move the motion control levers to the neutral locked position and set the parking brake.
2. Stop the engine, remove the key, and wait for all moving parts to stop before leaving the operating position.
3. Clean the grease fittings with a rag. Make sure to scrape any paint off the front of the fitting(s).
4. Connect a grease gun to the fitting. Pump grease into the fittings until grease begins to ooze out of the bearings.
5. Wipe up any excess grease.

### Adding Light Oil or Spray Lubrication

**Service Interval:** Every 100 hours

Lubricate the deck lift pivots.

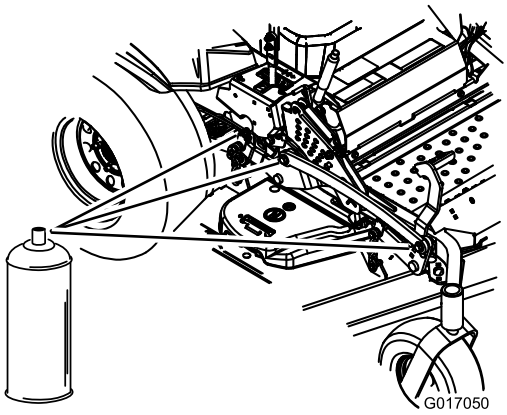


**Figure 37**

## Greasing the Mower

**Service Interval:** Every 50 hours—Grease the mower deck spindles and idler arm.

Yearly—Grease the pump belt idler arm.

Yearly—Grease the front caster pivots (more often in dirty or dusty conditions).

Yearly—Repack the front caster wheel bearings (more often in dirty or dusty conditions).

**Important: Make sure that the cutting unit spindles are full of grease weekly.**

1. Disengage the blade control switch (PTO), move the motion control levers to the neutral locked position, and set the parking brake.
2. Stop the engine, remove the key, and wait for all moving parts to stop before leaving the operating position.
3. Grease the mower deck idler pulley pivot until grease come out the bottom (Figure 38).
4. Grease the 3 spindle bearings until grease comes out the lower seals (Figure 38).

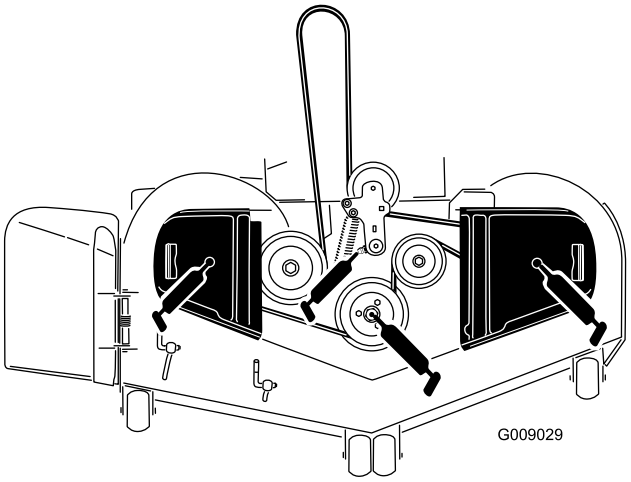


**Figure 38**

5. Grease the drive belt idler arm (Figure 38).

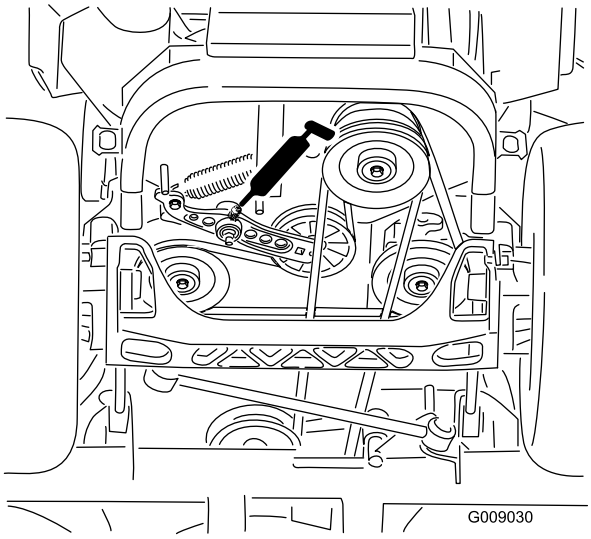


Figure 39

6. Remove the dust cap and adjust the caster pivots.

   **Note:** Keep the dust cap off until greasing is complete. Refer to Adjusting the Caster Pivot Bearing (page 41).

7. Remove the hex plug and thread a grease fitting into the hole.
8. Pump grease into the fitting until it oozes out around the top bearing.
9. Remove the grease fitting from the hole.
10. Install the hex plug and dust cap (Figure 40).

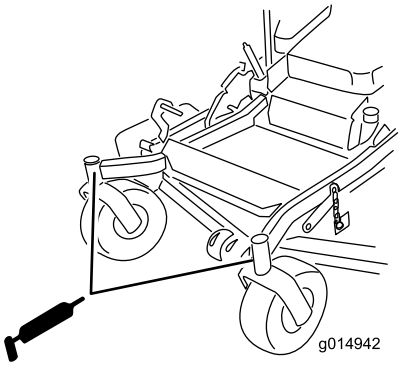


Figure 40

# Lubricate the Caster Wheel Hubs

**Service Interval:** Yearly

1. Stop the engine, wait for all moving parts to stop, and remove the key. Engage the parking brake.

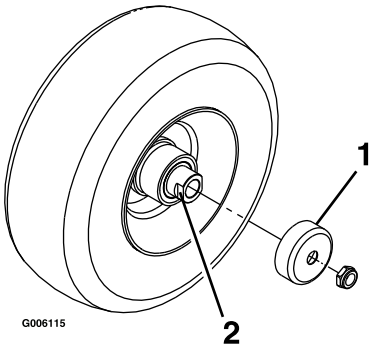


Figure 41

1. Seal guard
2. Spacer nut with wrench flats

2. Raise the front of the machine up and support it with jack stands.
3. Remove the caster wheel from the caster forks.
4. Remove the seal guards from the wheel hub.
5. Remove 1 of the spacer nuts from the axle assembly in the caster wheel.

   **Note:** Note that thread locking adhesive has been applied to lock the spacer nuts to the axle. Remove the axle (with the other spacer nut still assembled to it) from the wheel assembly.

6. Pry out the seals, and inspect the bearings for wear or damage and replace if necessary.
7. Pack the bearings with a general-purpose grease.
8. Insert 1 bearing and 1 new seal into the wheel.

   **Note:** The seals must be replaced.

9. If the axle assembly has had both spacer nuts removed (or broken loose), apply a thread locking adhesive to 1 spacer nut and thread it onto the axle with the wrench flats facing outward.

   **Note:** Do not thread the spacer nut all of the way onto the end of the axle. Leave approximately 3 mm (1/8 inch) from the outer surface of the spacer nut to the end of the axle inside the nut.

10. Insert the assembled nut and axle into the wheel on the side of the wheel with the new seal and bearing.
11. With the open end of the wheel facing up, fill the area inside the wheel around the axle full of general-purpose grease.
12. Insert the second bearing and new seal into the wheel.

13. Apply a thread locking adhesive to the second spacer nut and thread it onto the axle with the wrench flats facing outward.
14. Torque the nut to 8-9 N-m (75-80 in-lb), loosen, then re-torque to 2-3 N-m (20-25 in-lb).

    **Note:** Make sure that the axle does not extend beyond either nut.
15. Install the seal guards over the wheel hub and insert the wheel into the caster fork. Install the caster bolt and tighten the nut fully.

**Important: To prevent seal and bearing damage, check the bearing adjustment often. Spin the caster tire. The tire should not spin freely (more than 1 or 2 revolutions) or have any side play. If the wheel spins freely, adjust the torque on the spacer nut until there is a slight amount of drag. Apply thread locking adhesive.**

# Engine Maintenance

## Servicing the Air Cleaner

**Service Interval:** Every 150 hours

Every 300 hours/Yearly (whichever comes first)—Replace the primary air filter (more often in dusty or sandy conditions).

Every 300 hours—Check the inner air filter.

Every 600 hours—Replace the inner air filter.

**Note:** Check the filters more frequently if the operating conditions are extremely dusty or sandy.

### Removing the Filters

1. Disengage the PTO, move the motion-control levers to the neutral-locked position, and set the parking brake.
2. Stop the engine, remove the key, and wait for all moving parts to stop before leaving the operating position.
3. Release the latches on the air cleaner, and pull the air-inlet cover off the air-cleaner body (Figure 42).
4. Clean the air-inlet screen and cover.
5. Install the air-inlet cover and secure it with the latches (Figure 42).

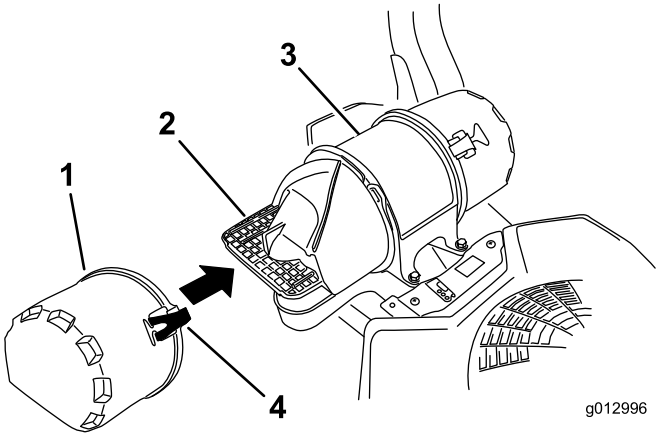


**Figure 42**

1. Air-inlet cover
2. Air-inlet screen
3. Air-cleaner body
4. Latch

6. Release the latches on the air cleaner and pull the air-cleaner cover off the air-cleaner body (Figure 43).
7. Clean the inside of the air-cleaner cover with compressed air.
8. Gently slide the primary filter out of the air-cleaner body (Figure 43).

   **Note:** Avoid knocking the filter into the side of the body.
9. Remove the inner filter only if you intend to replace it.

**Important:** **Never attempt to clean the inner filter. If the safety filter is dirty, then the primary filter is damaged. Replace both filters.**

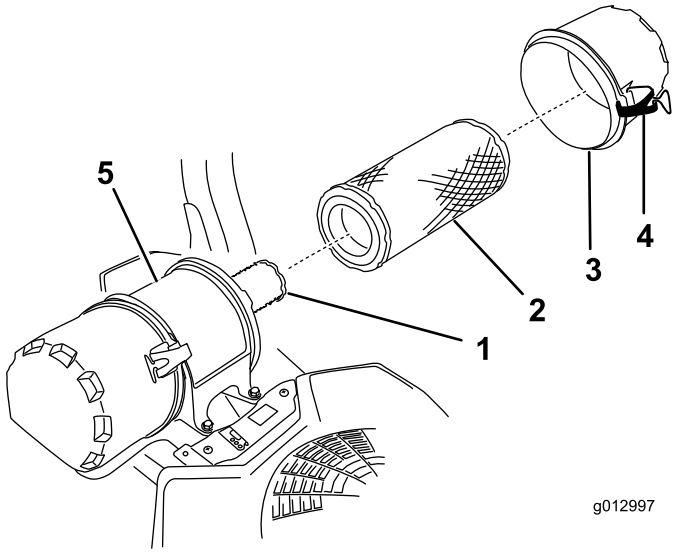


**Figure 43**

1. Inner filter
2. Primary filter
3. Air-cleaner cover
4. Latch
5. Air-cleaner body

10. Inspect the primary filter for damage by looking into the filter, while shining a bright light on the outside of the filter.

    **Note:** Holes in the filter will appear as bright spots. If the filter is damaged, discard it.

## Servicing the Primary Filter

- If the primary filter is dirty, bent, or damaged, replace it.
- Do not clean the primary filter.

## Servicing the Safety Filter

Replace the safety filter, never clean it.

**Important:** **Do not attempt to clean the safety filter. If the safety filter is dirty, then the primary filter is damaged. Replace both filters.**

## Installing the Filters

**Important:** **To prevent engine damage, always operate the engine with both air filters and the cover installed.**

1. If installing new filters, check each filter for shipping damage.

   **Note:** Do not use a damaged filter.

2. If the inner filter is being replaced, carefully slide it into the filter body (Figure 43).
3. Carefully slide the primary filter over the inner filter (Figure 43).

   **Note:** Ensure that the primary filter is fully seated by pushing on the outer rim while installing it.

   **Important:** **Do not press on the soft, inside area of the filter.**

4. Install the air-cleaner cover and secure the latches (Figure 43).

# Servicing the Engine Oil

**Oil Type:** Detergent oil (API service SJ or higher)

**Oil Capacity for 74959 engine:** with a filter change, 1.65 L (56 oz); with no filter change, 1.5 L (51 oz)

**Viscosity:** See the table below.

**USE THESE SAE VISCOSITY OILS**

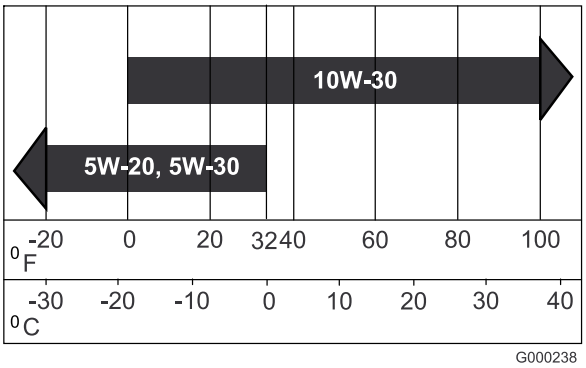


**Figure 44**

**Note:** Use of synthetic oil having 5W-20 or 5W-30 rating is acceptable, up to 4 degrees C (40 degrees F).

**Note:** Synthetic oils will provide better starting in extreme cold below -23 degrees C (-10 degrees F).

## Checking the Engine-oil Level

**Service Interval:** Before each use or daily

**Note:** Check the oil when the engine is cold.

**⚠ WARNING**

**Contact with hot surfaces may cause personal injury.**

**Keep hands, feet, face, clothing, and other body parts away from the muffler and other hot surfaces.**

**Important: Do not overfill the crankcase with oil because damage to the engine may result. Do not run engine with oil below the Low mark because the engine may be damaged.**

1. Disengage the PTO, move the motion-control levers to the neutral-locked position, and set the parking brake.
2. Stop the engine, remove the key, and wait for all moving parts to stop before leaving the operating position (Figure 45).

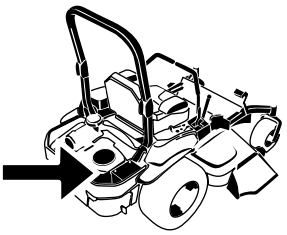

G008804

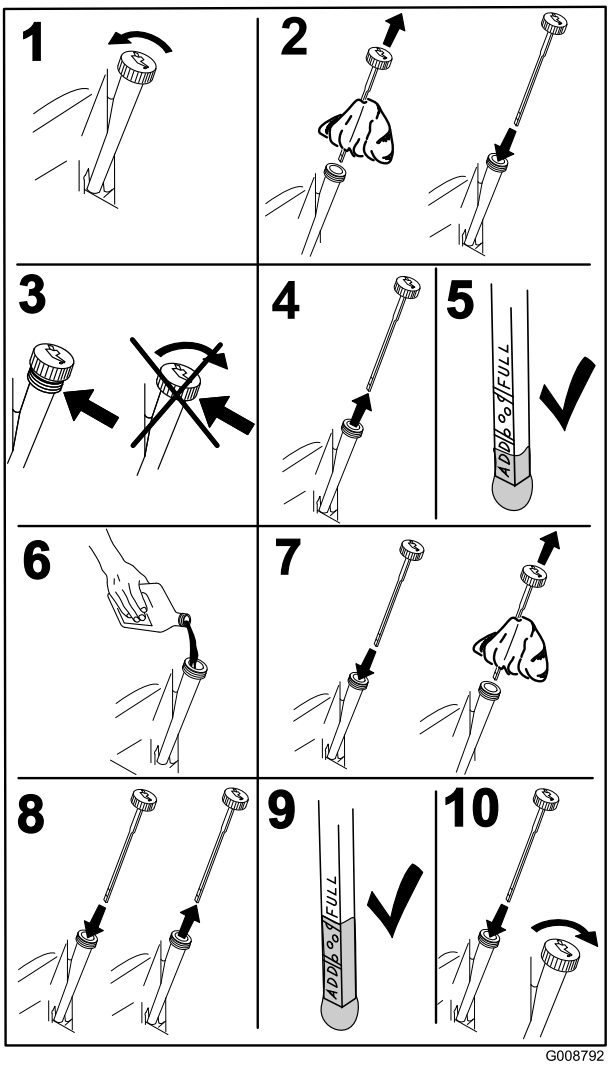


G008792

**Figure 45**

## Changing the Engine Oil

**Service Interval:** After the first 8 hours

Every 100 hours (more often in dirty or dusty conditions).

**Note:** Dispose of the used oil at a recycling center.

1. Start the engine and let it run for 5 minutes.

   **Note:** This warms the oil so it drains better.

2. Park the machine so that the rear is slightly lower than the front to ensure that the oil drains completely.
3. Disengage the PTO, move the motion-control levers to the neutral-locked position, and set the parking brake.
4. Stop the engine, remove the key, and wait for all moving parts to stop before leaving the operating position (Figure 46).

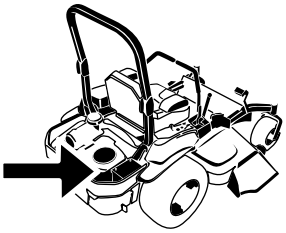

G008804

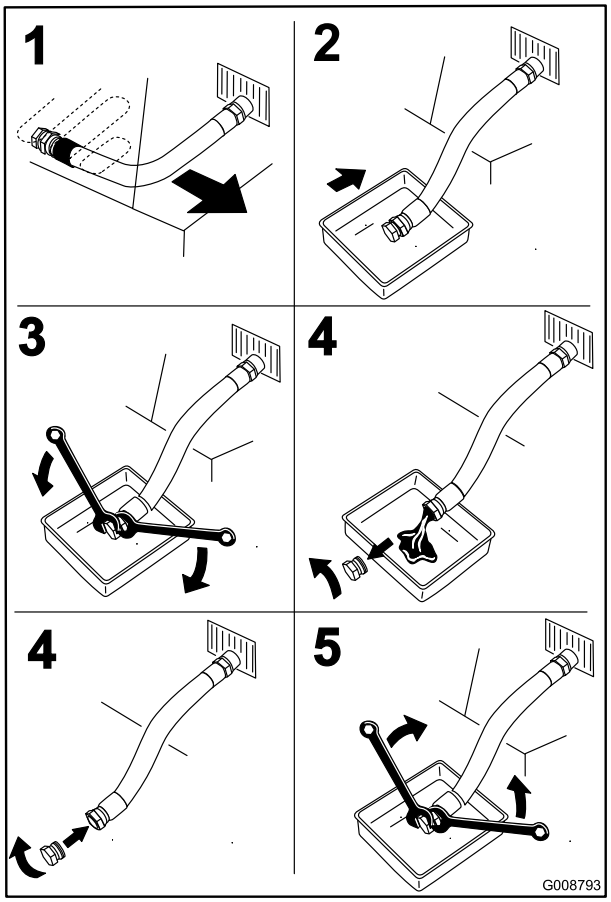


**Figure 46**

5. Slowly pour approximately 80% of the specified oil into the filler tube and slowly add the additional oil to bring it to the **Full** mark (Figure 47).

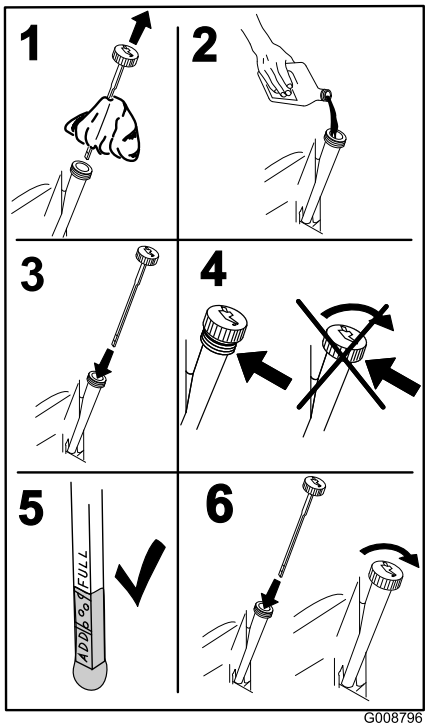


G008796

**Figure 47**

6. Start the engine and drive to a flat area.
7. Check the oil level again.

## Changing the Engine-oil Filter

**Service Interval:** Every 200 hours

**Note:** Change the engine-oil filter more frequently when operating conditions are extremely dusty or sandy.

1. Drain the oil from the engine; refer to Changing the Engine Oil (page 34).
2. Change the engine-oil filter (Figure 48).

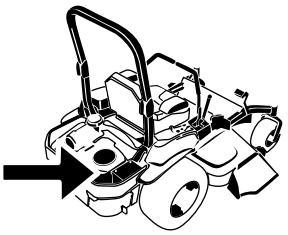

G008804

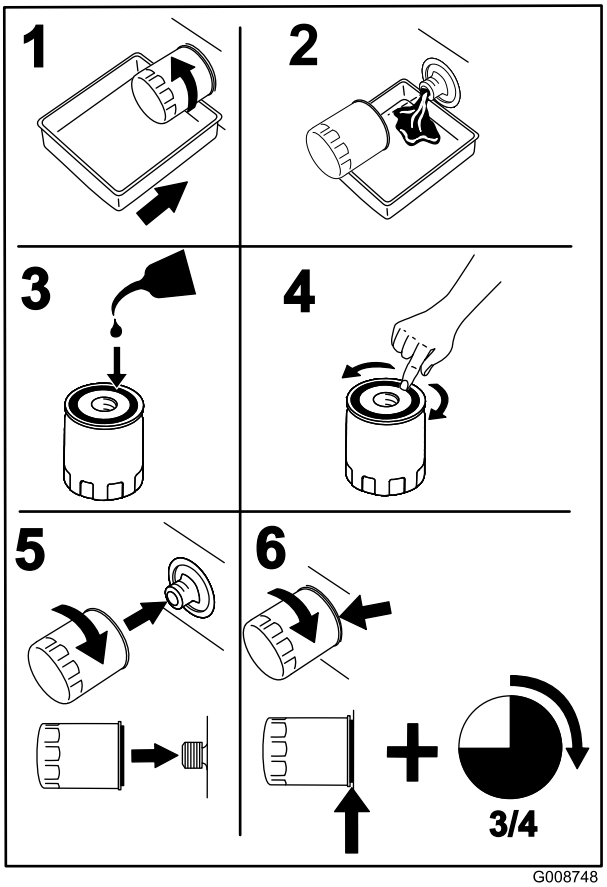


G008748

**Figure 48**

**Note:** Ensure the oil-filter gasket touches the engine, and then an extra 3/4 turn is completed.

3. Fill the crankcase with the proper type of new oil; refer to Changing the Engine Oil (page 34).

# Servicing the Spark Plug

**Service Interval:** Every 200 hours—Check, clean and regap the spark plug.

Make sure the air gap between the center and side electrodes is correct before installing the spark plug. Use a spark plug wrench for removing and installing the spark plug(s) and a gapping tool/feeler gauge to check and adjust the air gap. Install a new spark plug(s) if necessary.

**Type :** Champion® XC12YC, or equivalent

**Air Gap:** 0.76 mm (0.030 inch)

## Removing the Spark Plug

1. Stop the engine, remove the key, and wait for all moving parts to stop before leaving the operating position.
2. Disengage the PTO, move the motion control levers to the neutral locked position and set the parking brake.
3. Remove the left hydraulic unit shroud in the order listed with Figure 49. This gives you access to the front spark plug.

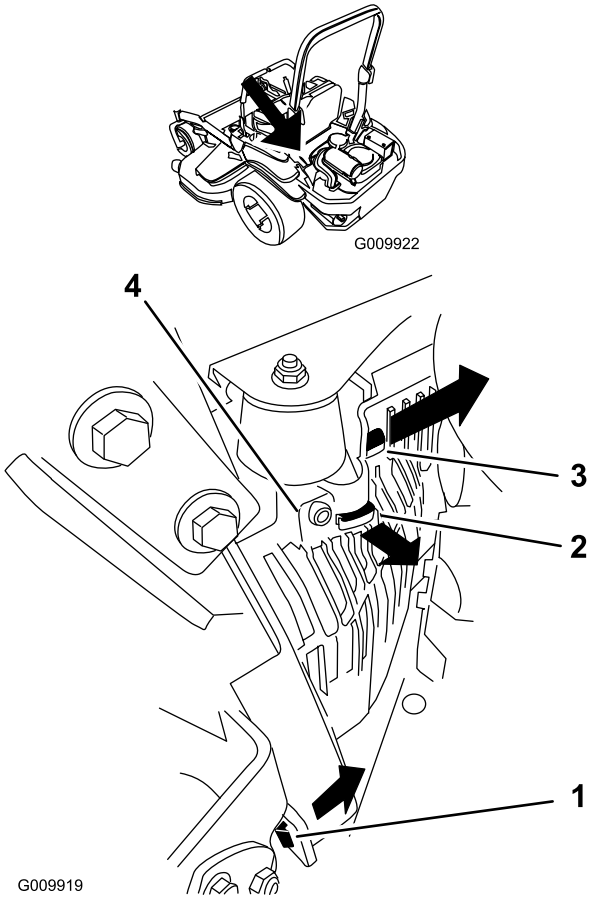


G009922

G009919

**Figure 49**

1. Pull this tab out to the side in the direction of the arrow
2. Pull the shroud off of this frame tab in the direction of the arrow
3. Pull the shroud off of this frame tab in the direction of the arrow
4. Shroud

4. Remove the spark plug.

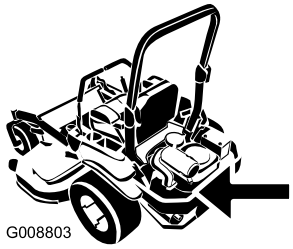


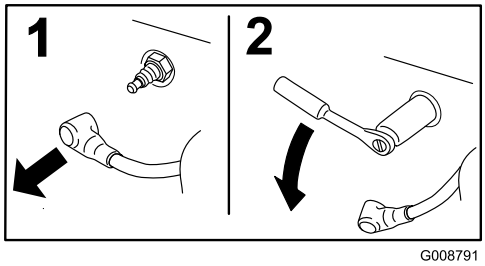


Figure 50

5. Install the left hydraulic unit shroud (Figure 49).

## Checking the Spark Plug

**Important: Replace the spark plug(s) when it has: a black coating, worn electrodes, an oily film, cracks or reuse is questionable.**

If you see light brown or gray on the insulator, the engine is operating properly. A black coating on the insulator usually means the air cleaner is dirty.

Set the gap to 0.76 mm (0.030 inches).

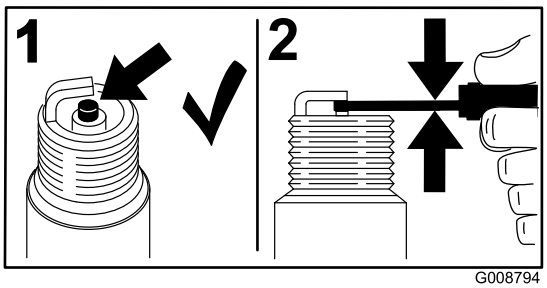


Figure 51

## Installing the Spark Plug

Tighten the spark plug(s) to 24.4–29.8 N-m (18-22 ft.-lb).

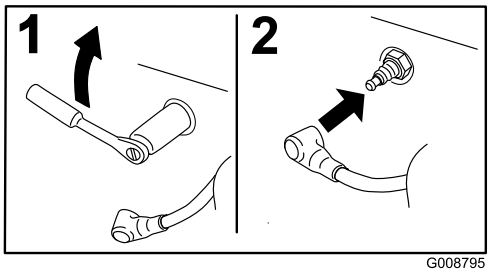


Figure 52

# Check the Spark Arrester (if equipped)

**Service Interval:** Every 50 hours

**⚠ WARNING**

**Hot exhaust system components may ignite gasoline vapors even after the engine is stopped. Hot particles exhausted during engine operation may ignite flammable materials. Fire may result in personal injury or property damage.**

**Do not refuel or run engine unless spark arrester is installed.**

1. Stop the engine, wait for all moving parts to stop, and remove the key. Engage the parking brake.
2. Wait for the machine to cool.
3. If there are any breaks in the screen or welds are observed, replace the arrester.
4. If the screen is plugged, remove the arrester and shake loose any particles out of the arrester and clean the screen with a wire brush (soak in solvent if necessary). Install the arrester on an exhaust outlet.

# Fuel System Maintenance

## Replacing the Fuel Filter

**Service Interval:** Every 500 hours/Yearly (whichever comes first) (more often in dirty or dusty conditions).

The fuel filter is located near the engine on the front or rear side of the engine.

1. Disengage the PTO, move the motion control levers to the neutral locked position, and set the parking brake.
2. Stop the engine, remove the key, and wait for all moving parts to stop before leaving the operating position.
3. Allow the machine to cool down.
4. Stop the engine, remove the key, and wait for all moving parts to stop before leaving the operating position.
5. Close the fuel shutoff valve under the seat (Figure 53).

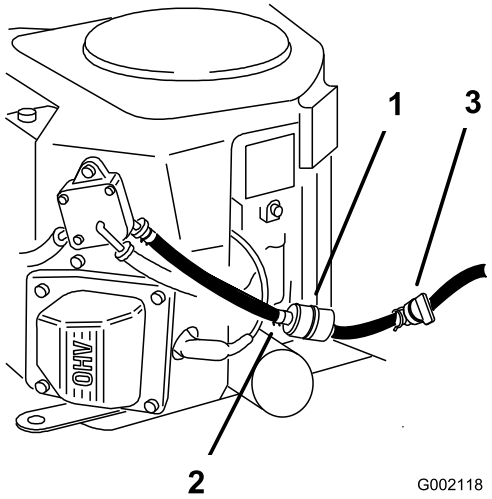


**Figure 53**

1. Fuel filter
2. Hose clamp
3. Fuel shutoff valve

6. Squeeze the ends of the hose clamps together and slide them away from the filter (Figure 53).
7. Remove the filter from the fuel lines.
8. Install a new filter and move the hose clamps close to the filter (Figure 53).
9. Open the fuel shutoff valve.

**Note:** It is important to reinstall the fuel line hoses and secure with plastic ties the same as they were originally installed at the factory to keep the fuel line away from components that can cause fuel line damage.

## Servicing the Fuel Tank

Do not attempt to drain the fuel tank. Ensure that an Authorized Service Dealer drains the fuel tank and services any components of the fuel system.

# Electrical System Maintenance

## Servicing the Battery

**Service Interval:** Monthly

**⚠ WARNING**

**CALIFORNIA**
**Proposition 65 Warning**

**Battery posts, terminals, and related accessories contain lead and lead compounds, chemicals known to the State of California to cause cancer and reproductive harm. Wash hands after handling.**

**⚠ DANGER**

**Battery electrolyte contains sulfuric acid which is a deadly poison and causes severe burns.**

**Do not drink electrolyte and avoid contact with skin, eyes or clothing. Wear safety glasses to shield your eyes and rubber gloves to protect your hands.**

### Removing the Battery

**⚠ WARNING**

**Battery terminals or metal tools could short against metal machine components causing sparks. Sparks can cause the battery gasses to explode, resulting in personal injury.**

- **When removing or installing the battery, do not allow the battery terminals to touch any metal parts of the machine.**
- **Do not allow metal tools to short between the battery terminals and metal parts of the machine.**

**⚠ WARNING**

**Incorrect battery cable routing could damage the machine and cables causing sparks. Sparks can cause the battery gasses to explode, resulting in personal injury.**

- **Always Disconnect the negative (black) battery cable before disconnecting the positive (red) cable.**
- **Always Reconnect the positive (red) battery cable before reconnecting the negative (black) cable.**

1. Disengage the blade control switch (PTO), move the motion control levers to the neutral locked position and set the parking brake.
2. Stop the engine, remove the key, and wait for all moving parts to stop before leaving the operating position.
3. First disconnect the negative battery cable (black) from the negative (-)(black) battery terminal (Figure 54).
4. Slide the red terminal boot off the positive (red) battery terminal and remove the positive (+)(red) battery cable (Figure 54).
5. Remove the wing nut securing the battery clamp (Figure 54).
6. Remove the clamp (Figure 54).
7. Remove the battery.

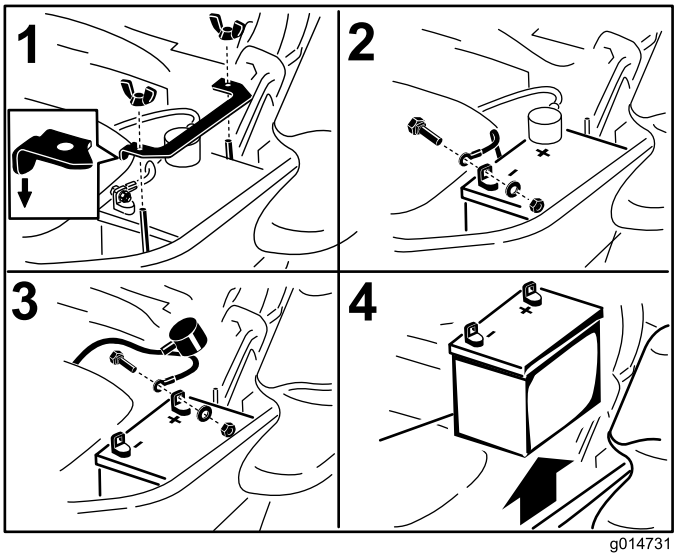


**Figure 54**

1. Remove the wing nut and clamp
2. Remove the negative battery cable before the positive
3. Remove the positive battery cable
4. Remove battery

## Installing the Battery

1. Position battery in the tray with the terminal posts opposite from the hydraulic tank (Figure 54).
2. First, install the positive (red) battery cable to positive (+) battery terminal.
3. Then install the negative (black) battery cable and ground wire to the negative (-) battery terminal.
4. Secure the cables with 2 bolts, 2 washers, and 2 locknuts (Figure 54).
5. Slide the red terminal boot onto the positive (red) battery post.
6. Install the clamp and secure it with the wing nut (Figure 54).

## Charging the Battery

**⚠ WARNING**

**Charging the battery produces gasses that can explode.**

**Never smoke near the battery and keep sparks and flames away from battery.**

**Important: Always keep the battery fully charged (1.265 specific gravity). This is especially important to prevent battery damage when the temperature is below 32°F (0°C).**

1. Charge battery for 10 to 15 minutes at 25 to 30 amps or 30 minutes at 10 amps.
2. When the battery is fully charged, unplug the charger from the electrical outlet, then disconnect the charger leads from the battery posts (Figure 55).
3. Install the battery in the machine and connect the battery cables, refer to Installing the Battery (page 39).

   **Note:** Do not run the machine with the battery disconnected, electrical damage may occur.

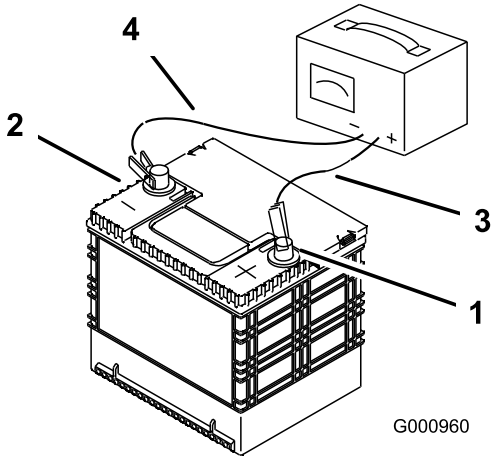


**Figure 55**

1. Positive Battery Post
2. Negative Battery Post
3. Red (+) Charger Lead
4. Black (-) Charger Lead

# Servicing the Fuses

The electrical system is protected by fuses. It requires no maintenance, however, if a fuse blows check the component/circuit for a malfunction or short.

1. The fuses are located on right hand console next to the seat (Figure 56).
2. To replace the fuses, pull out on the fuse to remove it.
3. Install a new fuse (Figure 56).

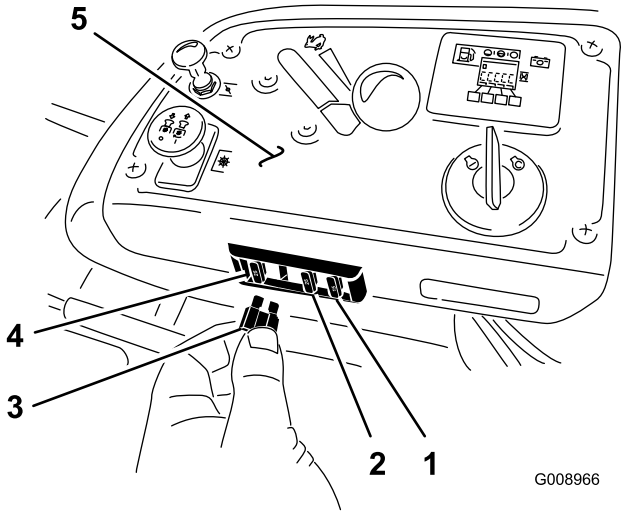


**Figure 56**

1. Optional accesory-15 amp
2. Charge-25amp
3. PTO-10amp
4. Main-25amp
5. Console

# Drive System Maintenance

## Checking the Seat Belt

**Service Interval:** Before each use or daily

Visually inspect seat belt for wear, cuts, and proper operation of retractor and buckle. Replace before operating if damaged.

## Checking the Rollover Protection System (ROPS) Knobs

**Service Interval:** Before each use or daily

**⚠ WARNING**

**To avoid injury or death from rollover: keep the roll bar in the fully raised locked position and use the seat belt.**

**Ensure the seat is secured to the machine.**

Check that both the mounting hardware and the knobs are in good working condition. Make sure the knobs are fully engaged with the ROPS in the raised position. The upper hoop of the roll bar may need to be pushed forward or pulled rearward to get both knobs fully engaged.

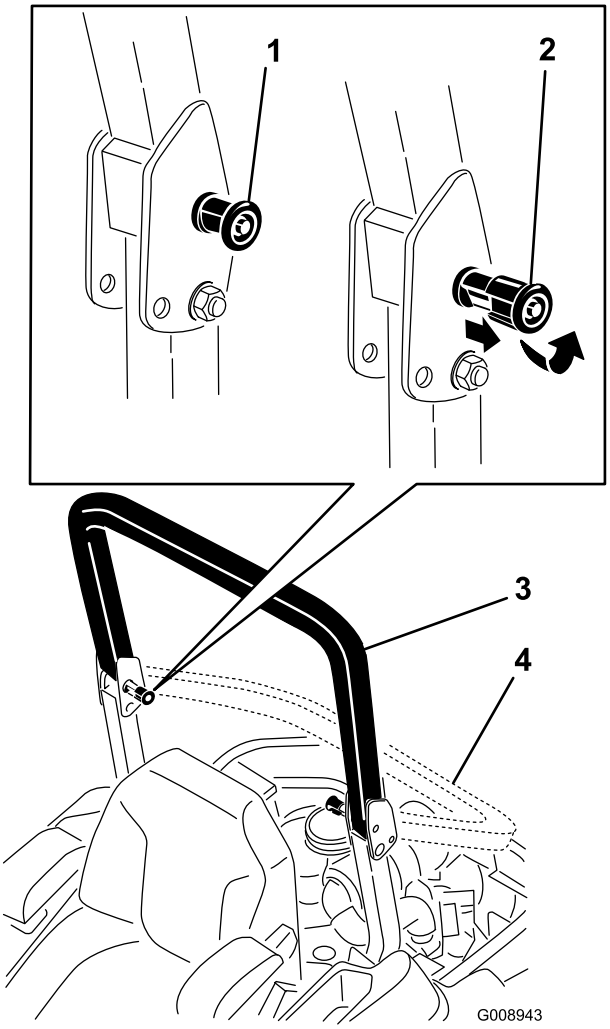


**Figure 57**

1. ROPS knob (locked position)
2. Pull ROPS knob out and rotate 90 degrees to change roll bar position
3. Roll bar in the upright position
4. Roll bar in the folded position

## Adjusting the Tracking

1. Disengage the blade control switch (PTO).
2. Drive to an open flat area, move the motion control levers to the neutral locked position.
3. Move the throttle midway between fast and slow.
4. Move both motion control levers all the way forward until they both hit the stops in the T-slot.
5. Check which way the machine tracks.
6. If it tracks to the right, loosen the bolts and adjust the left stop plate rearward on the left T-slot until the machine tracks straight (Figure 58).
7. If it tracks to the left, loosen the bolts and adjust the right stop plate rearward on the right T-slot until the machine tracks straight (Figure 58).
8. Tighten the stop plate (Figure 58).

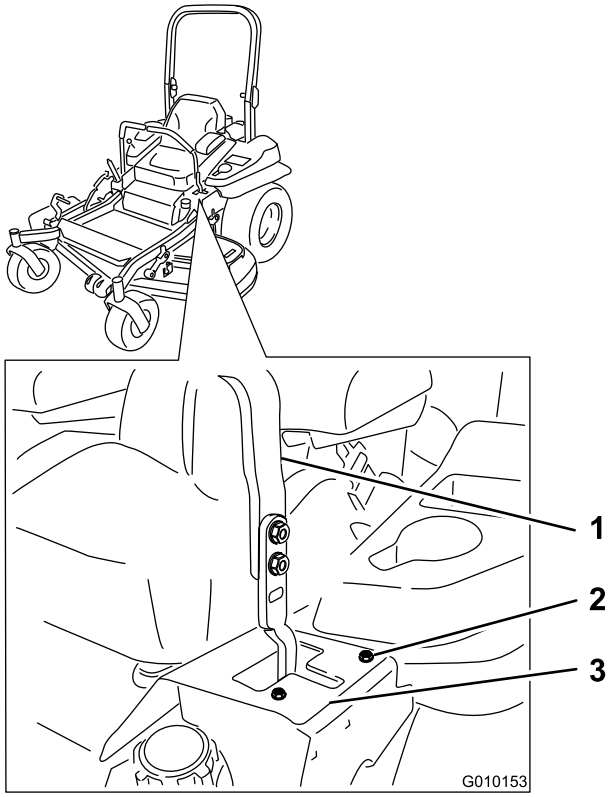


**Figure 58**

Left control lever shown

1. Control lever
2. Bolt
3. Stop plate

# Checking the Tire Pressure

**Service Interval:** Every 50 hours/Monthly (whichever comes first)

Maintain the air pressure in the front and rear tires at 90 kPa (13 psi). Uneven tire pressure can cause uneven cut. Check the tires when they are cold to get the most accurate pressure reading.

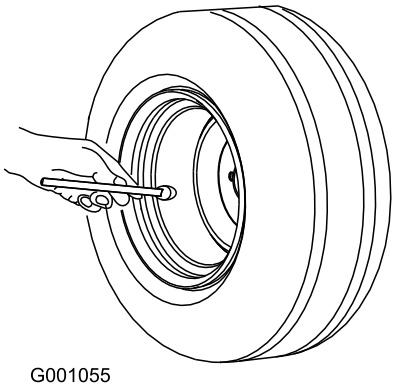


**Figure 59**

# Checking the Wheel Lug Nuts

Check and torque the wheel lug nuts to 122-129 N-m (90-95 ft-lb).

# Checking the Wheel Hub Slotted Nut

**Service Interval:** After the first 100 hours

Every 500 hours

Check and ensure that the torque of the slotted nut is 286 to 352 N-m (211 to 260 ft-lb).

**Note:** Do not use anti-seize on wheel hub.

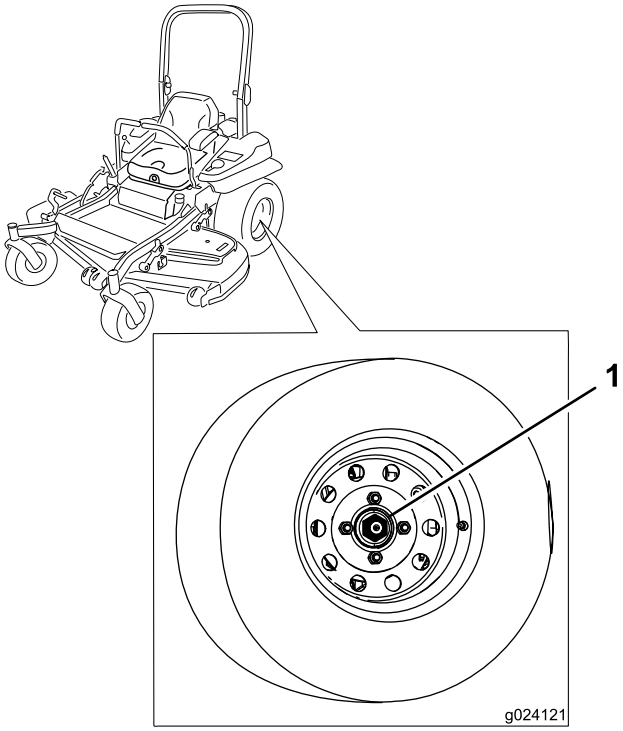


**Figure 60**

1. Slotted nut

# Adjusting the Caster Pivot Bearing

**Service Interval:** Every 500 hours/Yearly (whichever comes first)

1. Disengage the blade control switch (PTO), move the motion control levers to the neutral locked position and set the parking brake.
2. Stop the engine, remove the key, and wait for all moving parts to stop before leaving the operating position.
3. Remove the dust cap from caster and tighten lock nut (Figure 61).

4. Tighten the locknut until the spring washers are flat and then back off a 1/4 turn to properly set the pre-load on the bearings (Figure 61).

   **Important: Make sure the spring washers are installed correctly as shown in Figure 61.**

5. Install the dust cap (Figure 61).

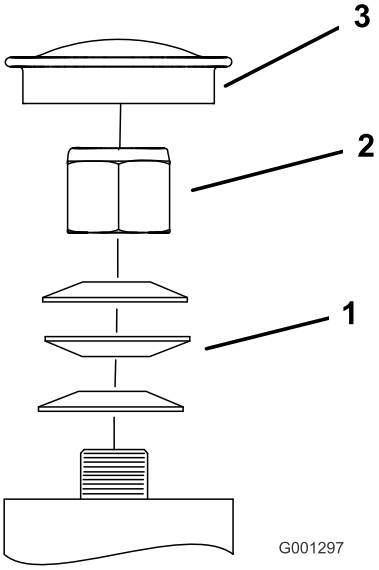


**Figure 61**

1. Spring Washers
2. Lock Nut
3. Dust Cap

# Using the Clutch Shim

Some later model year units have been built with clutches that contain a brake shim. When the clutch brake has worn to the point where the clutch no longer engages consistently, the shim can be removed to extend the clutch life.

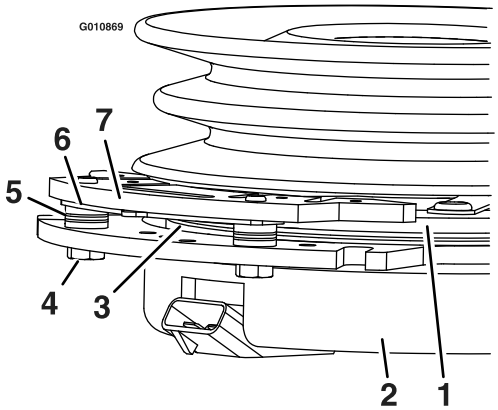


**Figure 62**

1. Armature
2. Field shell
3. Rotor
4. Brake mounting bolt
5. Brake spacer
6. Re-gap shim
7. Brake pole

## Removing the Clutch Shim

1. Stop the engine, wait for all moving parts to stop, and remove the key.
2. Engage the parking brake and allow the machine to cool completely before starting these instructions.
3. Using an air compressor, blow out any debris from under the brake pole and around the brake spacers.

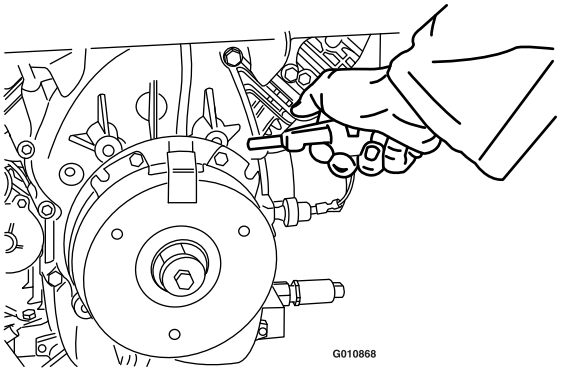


**Figure 63**

4. Check the condition of the wire harness leads, connectors, and terminals. Clean or repair as necessary.
5. Verify that 12V is present at the clutch connector when the PTO switch is engaged.
6. Measure the gap between the rotor and armature. If the gap is greater than 1 mm (0.04 inch), proceed with the following steps:

   A. Loosen both brake mounting bolts one-half to one full turn as shown below.

   **Note:** Do not remove the brake pole from the field shell/armature. The brake pole has worn to match the armature and needs to continue to match after the shim is removed to ensure proper brake torque.

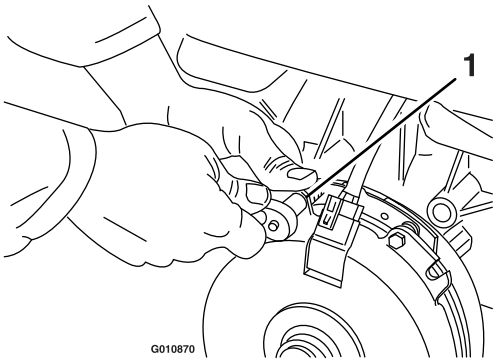


**Figure 64**

1. Brake mounting bolt

   B. Using needle nose pliers, or by hand, take hold of the tab, and remove the shim (Do not discard the shim until proper clutch function has been confirmed).

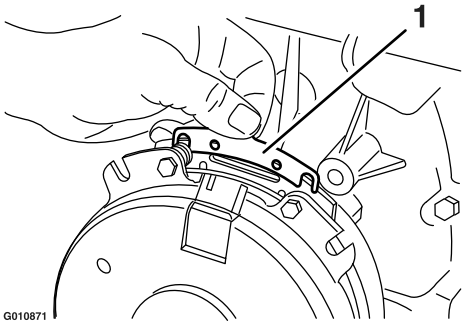


**Figure 65**

1. Shim

C. Using a pneumatic line, blow out any debris from under the brake pole and around the brake spacers.

D. Re-torque each bolt (M6 x 1) to 13 N-m (10 ft-lb +/-0.7 N-m (0.5 ft-lb).

E. Using a 0.010 inch thick feeler gauge, verify that a gap is present between the rotor and armature face on both sides of the brake pole as shown.

**Note:** Due to the way the rotor and armature faces wear (peaks and valleys) it is sometimes difficult to measure the true gap.

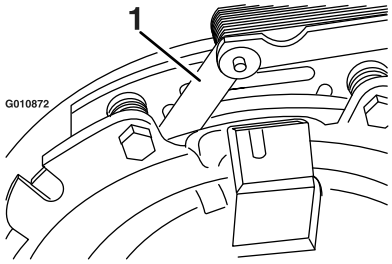


**Figure 66**

1. Feeler gauge

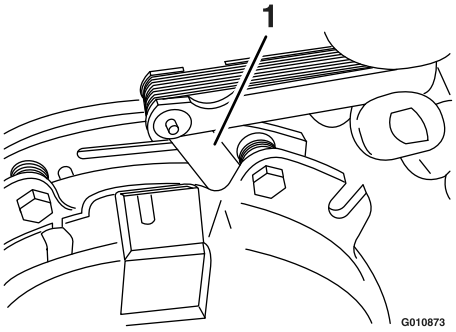


**Figure 67**

1. Feeler gauge

- If the gap is less than 0.010 inch, then reinstall the shim and reference the Troubleshooting (page 60) section.
- If the gap is sufficient, proceed to the safety check in step F.

F. Perform the following safety check:

i. Sit on the seat and start the engine.

ii. Make sure the blades Do not engage with the PTO switch "off" and the clutch disengaged.

If the clutch does not disengage, install the shim, and reference the Troubleshooting (page 60) section.

iii. Engage and disengage the PTO switch 10 consecutive times to ensure the clutch is functioning properly. If the clutch does not engage properly, reference theTroubleshooting (page 60) section.

# Cooling System Maintenance

## Cleaning the Engine Screen and Engine Oil Cooler

**Service Interval:** Before each use or daily

Remove any build-up of grass, dirt, or other debris from the oil cooler (Figure 68).

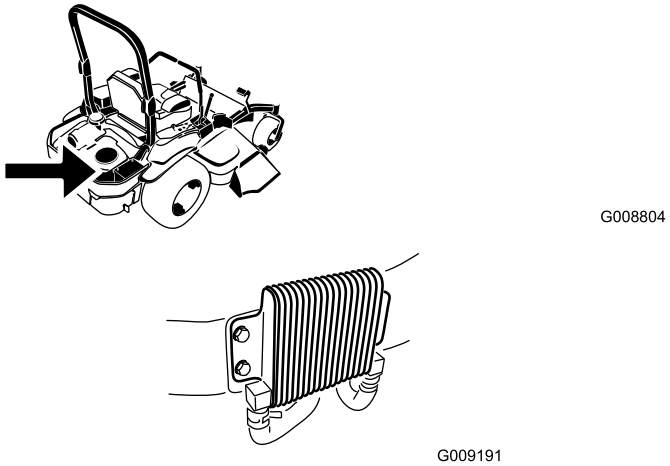


**Figure 68**

Before each use remove any build-up of grass, dirt, or other debris from the engine screen. This will help ensure adequate cooling and correct engine speed and will reduce the possibility of overheating and mechanical damage to the engine (Figure 69).

## Cleaning the Engine Cooling Fins and Shrouds

**Service Interval:** Every 100 hours/Yearly (whichever comes first)

1. Disengage the PTO and set the parking brake.
2. Stop the engine, remove the key, and wait for all moving parts to stop before leaving the operating position.
3. Remove the air intake screen, recoil starter, and fan housing (Figure 69).
4. Clean the debris and grass from the engine parts.
5. Install air intake screen, recoil starter, and fan housing (Figure 69).

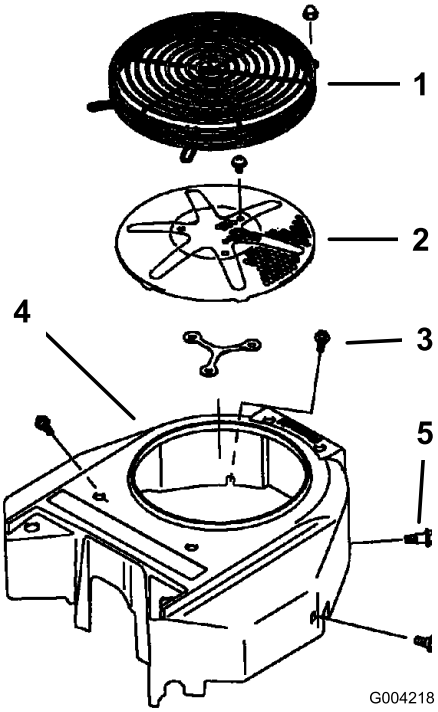


**Figure 69**

1. Engine guard
2. Engine air intake screen
3. Bolt
4. Fan housing
5. Screw

## Check and Clean the Hydraulic Units

**Service Interval:** Before each use or daily

1. Disengage the PTO and set the parking brake.
2. Stop the engine, remove the key, and wait for all moving parts to stop before leaving the operating position.
3. Move the seat forward.
4. Clean the debris and grass from the hydraulic units (Figure 70).
5. Position the seat.

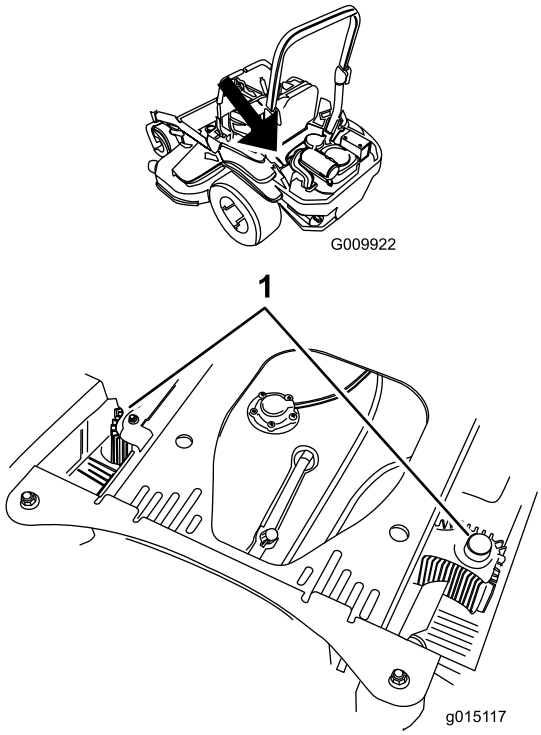


**Figure 70**

1. Hydraulic units

# *Brake Maintenance*

## Adjusting the Parking Brake

**Service Interval:** After the first 100 hours

Every 500 hours thereafter

Check to make sure brake is adjusted properly. Perform this procedure after the first 100 hours or when a brake component has been removed or replaced.

1. Drive the machine onto a level surface.
2. Disengage the blade control switch (PTO), move the motion control levers to the neutral locked position and set the parking brake.
3. Stop the engine, wait for all moving parts to stop, and remove the key.
4. Raise the back of the machine up and support the machine with jack stands.

**⚠ DANGER**

**Mechanical or hydraulic jacks may fail to support machine and cause a serious injury.**

- **Use jack stand when supporting machine.**
- **Do not use hydraulic jacks.**

5. Remove the rear tires from the machine.
6. Remove any debris from the brake area.
7. Rotate the drive wheel release handle to the **released** position. Refer to Using the Drive Wheel Release Valves (page 25).
8. Measure the overall length of the compression spring. Ensure the correct length is between 3.8 and 4.0 cm (1-1/2 and 1-9/16 inches). If the spring length is within this range, no adjustment is needed. If it is not, proceed to step 9.
9. Hold the threaded rod end with a tool and adjust the lock nut until the spring length is between 3.8 and 4.0 cm (1-1/2 and 1-9/16 inches) (Figure 71). Do not allow the cable to turn when the nuts are being loosened.

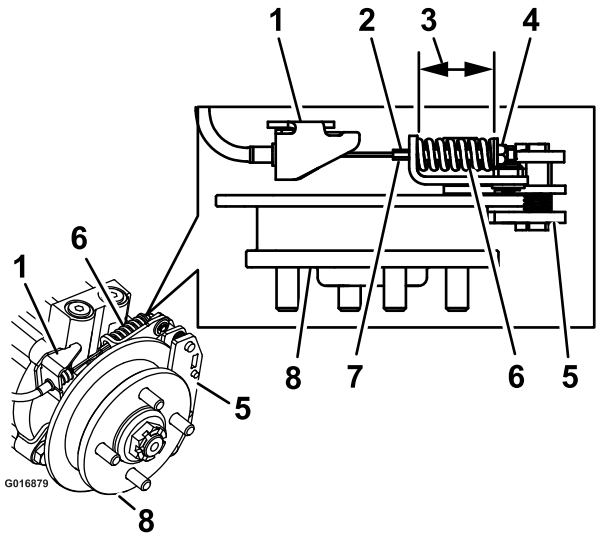


**Figure 71**
Left Hand Brake Shown

| | |
|---|---|
| 1. Cable anchor | 5. Caliper |
| 2. Hold threaded rod here | 6. Compression spring |
| 3. Measure | 7. Threaded rod |
| 4. Lock nut | 8. Hub |

10. Disengage the park brake. Turn the wheel hub by hand in both directions relative to the caliper; no drag of the caliper pad on the wheel hub is desired.
11. If there is no movement between the hub and the caliper then repeat the adjustment (ensure the drive release valves are in the **released** position on the hydros).
12. After adjusting the brakes on both sides of the mower, cycle the brake handle a minimum of 6 times to allow the cable to seat into the sheath and mounting tabs.
13. Recheck the spring length; engage the park brake and repeat steps 8 through 11 if the length is not in the correct range.
14. Rotate the drive wheel release handle to the **operating** position. Refer to Using the Drive Wheel Release Valves (page 25).
15. Install the rear tires and torque lug nuts between 122 and 129 N-m (90 and 95 ft-lb).
16. Remove jack stands.

# Belt Maintenance

## Inspecting the Belts

**Service Interval:** Every 50 hours

Check the belts for squealing when the belt is rotating, blades slipping when cutting grass, frayed belt edges, burn marks, and cracks are signs of a worn mower belt. Replace the mower belt if any of these conditions are evident.

## Replacing the Mower Belt

Squealing when the belt is rotating, blades slipping when cutting grass, frayed belt edges, burn marks and cracks are signs of a worn mower belt. Replace the mower belt if any of these conditions are evident.

1. Disengage the PTO, move the motion control levers to the neutral locked position, and set the parking brake.
2. Stop the engine, remove the key, and wait for all moving parts to stop before leaving the operating position.
3. Lower the mower to the 76 mm (3 inch) height of cut.
4. Remove the belt covers (Figure 72).

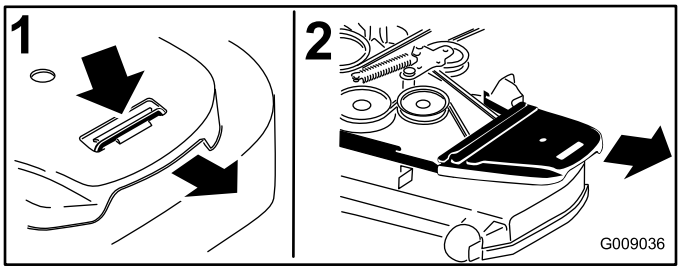


**Figure 72**

| | |
|---|---|
| 1. Push tab down | 2. Remove belt cover |

5. Use a ratchet in the square hole in the idler arm to remove tension on the idler spring (Figure 73).
6. Remove the belt from the mower deck pulleys.
7. Remove the belt guide on the spring loaded idler arm shown in Figure 73.
8. Remove the existing belt.
9. Install the new belt around the mower pulleys and the clutch pulley under the engine (Figure 73).

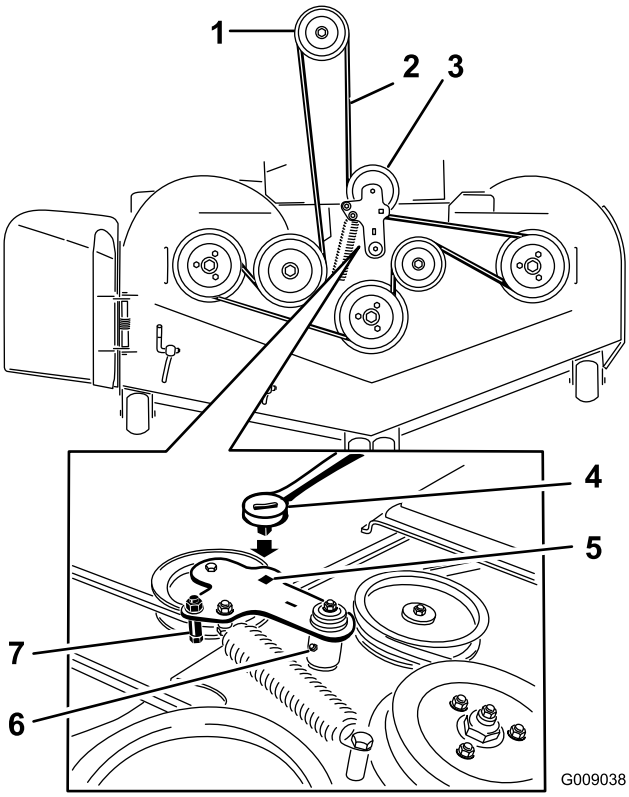


**Figure 73**

1. Clutch pulley
2. Mower belt
3. Spring loaded idler pulley
4. Ratchet
5. Square hole in the idler arm for the ratchet
6. Idler grease fitting
7. Belt guide

10. Install the belt guide on the idler arm shown in Figure 73.
11. Using the ratchet in the square hole, install the idler spring (Figure 73).

    Make sure that the spring ends are seated in the anchor grooves.
12. Install the belt covers (Figure 74).

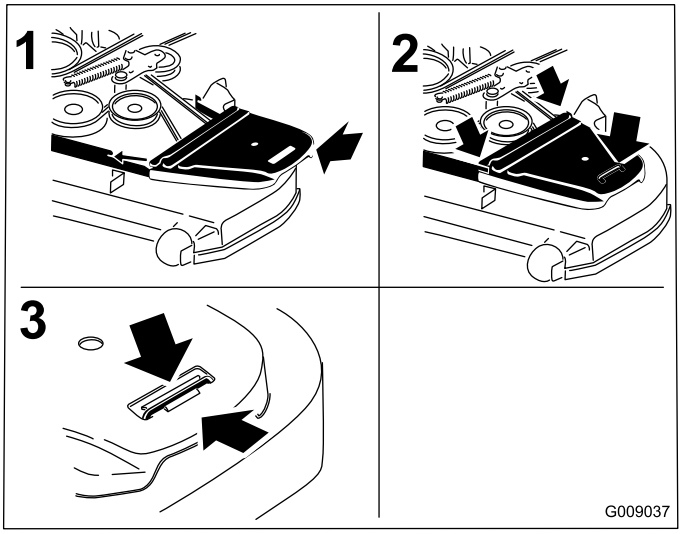


**Figure 74**

1. Position the belt cover
2. Slide belt cover under the side catches
3. Ensure the tab is under the metal catch

# Replacing the Hydraulic Pump Drive Belt

1. Disengage the PTO and set the parking brake.
2. Stop the engine, remove the key, and wait for all moving parts to stop before leaving the operating position.
3. Remove mower belt. Refer to Replacing the Mower Belt (page 46).
4. Raise the machine and support it with jack stands (Figure 75).

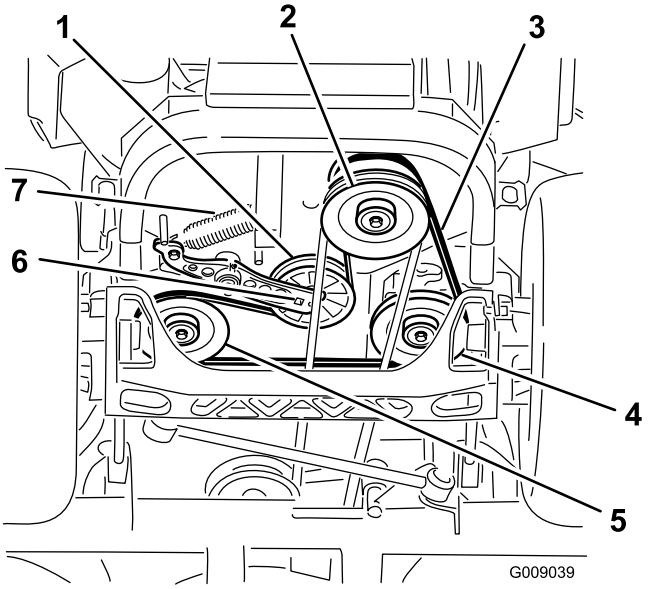


**Figure 75**

1. Idler pulley
2. Clutch pulley
3. Pump drive belt
4. Right hand hydraulic pump pulley
5. Left hand hydraulic pump pulley
6. Square hole in idler arm
7. Idler spring

5. Use a ratchet in the square hole in the idler arm to remove the idler spring (Figure 75).
6. Unhook the idler spring from the frame (Figure 75).
7. Remove the belt from the hydraulic unit drive pulleys and the engine pulley
8. Install the new belt around engine pulley and the 2 drive pulleys.
9. Using a ratchet in the square hole in the idler arm, install the idler spring to the frame (Figure 75).
10. Install the mower belt. Refer to Replacing the Mower Belt (page 46).

# Controls System Maintenance

## Adjusting the Control Handle Position

There are 2 height positions for the control levers; high and low. Remove the bolts to adjust the height for the operator.

1. Disengage the PTO, move the motion control levers to the neutral locked position, and set the parking brake.
2. Stop the engine, remove the key, and wait for all moving parts to stop before leaving the operating position.
3. Loosen the bolts and flange nuts installed in the levers (Figure 76).
4. Align the levers front to rear position by bring the levers together to the neutral position and slide them until they are aligned, then tighten the bolts (Figure 77).

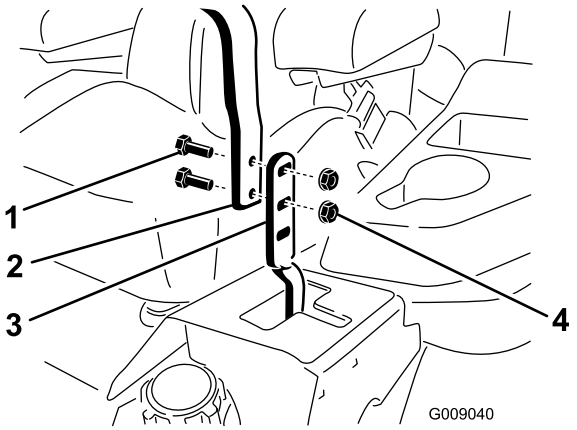


**Figure 76**

1. Bolt
2. Handle
3. Control lever
4. Nut

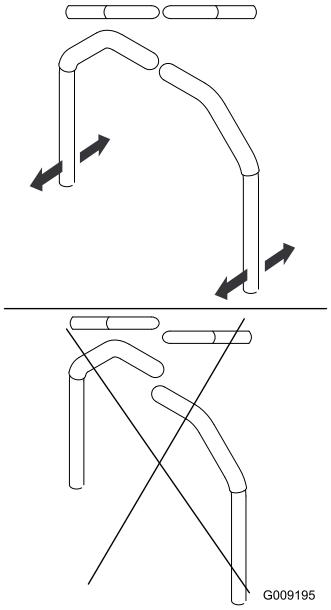


Figure 77

# Adjusting the Motion Control Linkage

Located on either side of the fuel tank, below the seat are the pump control linkages. Rotating the pump linkage with a 1/2 inch wrench allows fine-tuning adjustments so that the machine does not move in neutral. Any adjustments should be made for neutral positioning only.

**⚠ WARNING**

**The engine must be running and the drive wheels must be turning so that the motion-control adjustment can be performed. Contact with moving parts or hot surfaces may cause personal injury.**

**Keep fingers, hands, and clothing clear of rotating components and hot surfaces.**

1. Prior to starting the engine, push the deck-lift pedal and remove the height-of-cut pin. Lower the deck to the ground.
2. Raise the rear of machine up and support it with jack stands (or equivalent support) just high enough to allow the drive wheels to turn freely.
3. Remove the electrical connection from the seat safety switch, located under the bottom cushion of the seat.

   **Note:** The switch is a part of the seat assembly.
4. **Temporarily** install a jumper wire across the terminals in the connector of the main wiring harness.
5. Start the engine.

   **Note: The brake must be engaged and the motion-control levers must be out to start the engine. The operator does not have to be in the seat because of the jumper wire being used.** Run the engine at full throttle and release the brake.
6. Run the machine at least 5 minutes with the motion-control levers at full forward speed to bring the hydraulic oil up to operating temperature.

   **Note:** The motion-control lever needs to be in neutral while making any necessary adjustments.
7. Bring the motion-control levers into the neutral position.
8. Adjust the pump control rod lengths by rotating the double nuts on the rod in the appropriate direction until the wheels slightly creep in reverse (Figure 78).

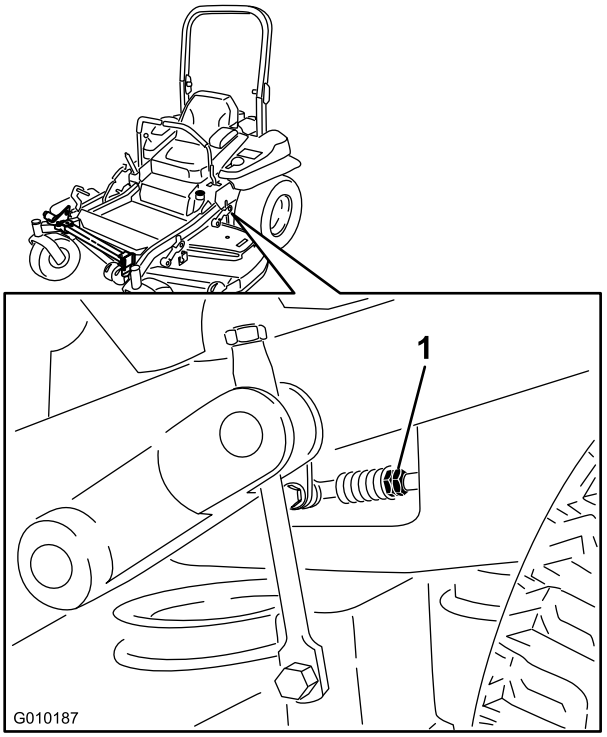


Figure 78

1. Double nuts

9. Move the motion-control levers to the reverse position, and while applying slight pressure to the lever, allow the reverse indicator springs to bring the levers back to neutral.

   **Note:** The wheels must stop turning or slightly creep in reverse.
10. Shut off the machine. Remove the jumper wire from wire harness and plug the connector into the seat switch.
11. Remove the jack stands.
12. Raise the deck and install the height-of-cut pin.
13. Check that the machine does not creep in neutral with the park brakes disengaged.

# Adjusting the Motion-control Damper

The top damper-mounting bolt can be adjusted to obtain a more desired motion-control lever resistance. See Figure 79 for mounting options.

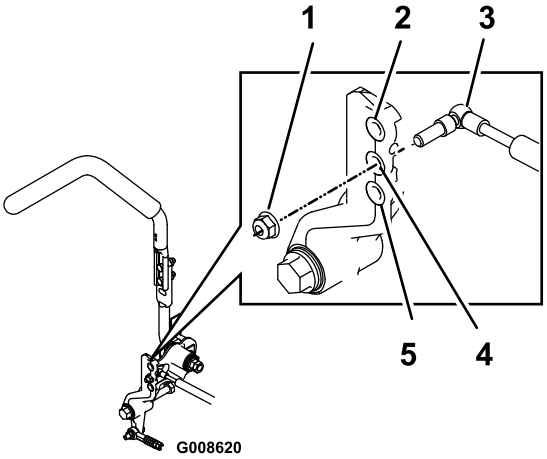


**Figure 79**

RH Motion Control Shown

1. Torque the lock nut to 23 N-m (17 ft-lb). The bolt must protrude past the end of the locknut after torquing.
2. Most resistance (firmest feel)
3. Damper
4. Medium resistance (medium feel)
5. Least resistance (softest feel)

# Adjusting the Motion Control Neutral Lock Pivot

The flanged nut can be adjusted to obtain a more desired motion control lever resistance when moving it to the neutral lock position. See Figure 80 for adjustment options.

1. Loosen the jam nut.
2. Tighten or loosen the flanged nut to the desired feel.

   For more resistance, tighten the flanged nut.

   For less resistance, loosen the flanged nut
3. Tighten the jam nut.

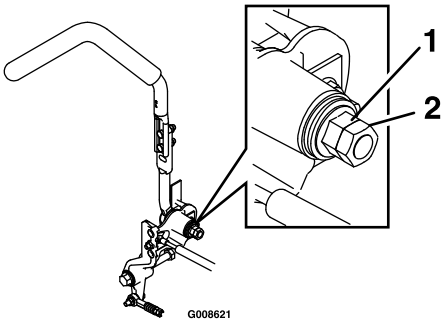


**Figure 80**

1. Flanged nut
2. Jam nut

# Hydraulic System Maintenance

## Servicing the Hydraulic System

**Hydraulic Oil Type:** Toro® HYPR-OIL™ 500 hydraulic oil or Mobil® 1 15W-50.

**Important: Use oil specified. Other fluids could cause system damage.**

**Each Hydraulic System Oil Capacity:** 52 ounces (1.5 l) per side with filter change

### Checking the Hydraulic Oil

**Service Interval:** Every 50 hours—Check the hydraulic oil level.

1. Position the machine on a level surface.
2. Disengage the PTO, move the motion-control levers to the neutral-locked position, and set the parking brake.
3. Stop the engine, remove the key, and wait for all moving parts to stop before leaving the operating position.
4. Allow the engine and hydraulic system to cool for 10 minutes.

   **Note:** The oil level on the dipstick will be incorrect if the oil is checked when the machine is hot.
5. Move the seat forward.
6. Clean the area around the dipsticks of the hydraulic system reservoirs (Figure 81).
7. Remove one dipstick from the hydraulic reservoir (Figure 81).
8. Wipe the dipstick off and thread the dipstick into the reservoir.
9. Remove the dipstick and look at the end (Figure 81).

   **Note:** If the oil level is at the add mark, slowly pour only enough oil into the hydraulic reservoir to raise the level to the full or **H** line.

   **Important: Do not overfill the hydraulic units with oil as damage may occur. Do not run the machine with the oil below the add mark.**
10. Install the dipstick.
11. Repeat procedure for the opposite dipstick.

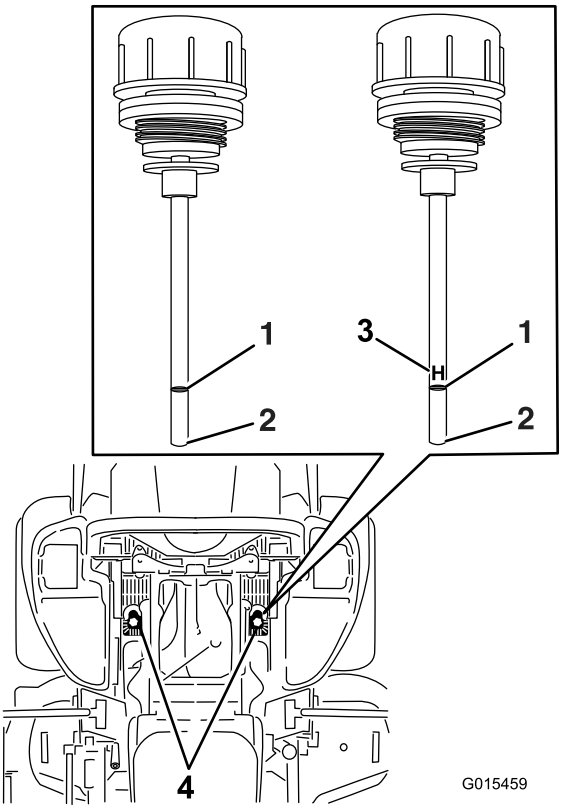


**Figure 81**

Either dipstick will be used in the machine

1. Full
2. Add
3. **H**—means high level
4. Dipstick locations under seat

**⚠ WARNING**

**Hydraulic oil escaping under pressure can penetrate skin and cause injury.**

- **If hydraulic oil is injected into the skin it must be surgically removed within a few hours by a doctor familiar with this type of injury. Gangrene may result if this is not done.**
- **Keep body and hands away from pin hole leaks or nozzles that eject high pressure hydraulic oil.**
- **Use cardboard or paper to find hydraulic leaks.**
- **Safely relieve all pressure in the hydraulic system before performing any work on the hydraulic system.**
- **Make sure that all hydraulic oil hoses and lines are in good condition and that all hydraulic connections and fittings are tight before applying pressure to the hydraulic system.**

## Replacing the Hydraulic Filters and Hydraulic Oil

**Service Interval:** After the first 250 hours—Change the hydraulic filters and hydraulic oil when using any type of oil.

Every 250 hours—Change the hydraulic filters and hydraulic oil when using Mobil® 1 oil (more often in dirty or dusty conditions).

Every 500 hours—Change the hydraulic filters and hydraulic oil when using Toro® HYPR-OIL™ 500 hydraulic oil (more often in dirty or dusty conditions).

To replace the hydraulic oil, the filters need to be removed. Replace both at the same time; refer to Servicing the Hydraulic System (page 51) for the oil specifications.

1. Disengage the blade-control switch (PTO), move the motion-control levers to the neutral-locked position, and set the parking brake.
2. Stop the engine, remove the key, and wait for all moving parts to stop before leaving the operating position.
3. Raise the machine and support it with jack stands (Figure 82).

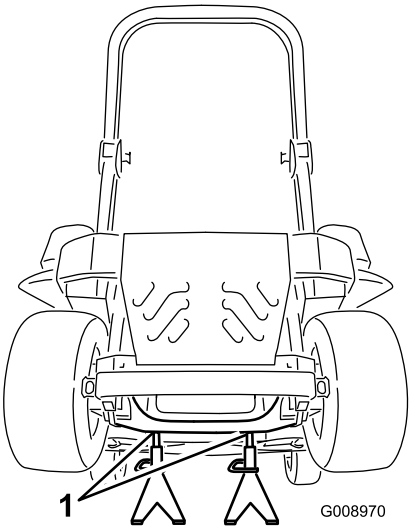


**Figure 82**

1. Jack stands

4. Remove both the mower belt and the pump-drive belt; refer to Replacing the Mower Belt (page 46) and Replacing the Hydraulic Pump Drive Belt (page 47).

   **Note:** This prevents oil from getting on the belts.
5. Place a drain pan under the filter, remove the old filter, and wipe the surface clean (Figure 83).

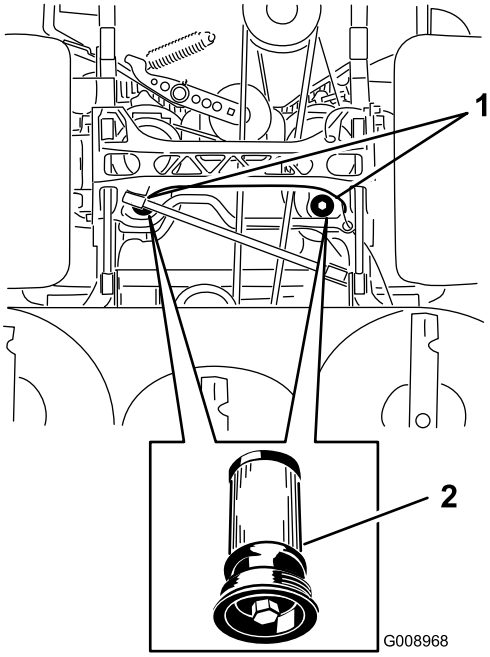


**Figure 83**
Bottom view of the machine

1. Filter locations
2. Hydraulic filter

6. Apply a thin coat of hydraulic oil to the rubber gasket on the replacement filter (Figure 83).
7. Install the replacement hydraulic filter.
8. Install the pump-drive belt and the mower belt.
9. Remove the jack stands and lower the machine (Figure 82).
10. Add oil to the hydraulic reservoir and check for any leaks.
11. Clean up any spilled oil.
12. Start the engine and let it run for about 2 minutes to purge air from the system.
13. Stop the engine and check for leaks.
14. Check the oil level while the oil is cold.
15. If required, add oil to the hydraulic reservoir.

    **Note:** Do not overfill.

# Mower Deck Maintenance

## Leveling the Mower Deck

### Setting Up the Machine

**Note:** Ensure the mower deck is leveled before matching the height-of-cut (HOC).

1. Position mower on a flat surface.
2. Disengage the blade control switch (PTO), move the motion control levers to the neutral locked position and set the parking brake.
3. Stop the engine, remove the key, and wait for all moving parts to stop before leaving the operating position.
4. Check tire pressure of the tires. If needed, adjust to 90 kPa (13 psi).
5. Position the mower to the 76 mm (3 inch) height-of-cut position.

### Deck Leveling

1. Position the mower on a flat surface.
2. Stop engine, wait for all moving parts to stop, and remove key. Engage parking brake.
3. Check the tire pressure in the drive tires. Proper inflation pressure for tires is 90 kPa (13 psi). Adjust if necessary.
4. Position the transport lock in the latching position.
5. Push the deck lift pedal all the way forward and the deck will latch at the 14 cm (5 1/2 inch) transport position (Figure 84).

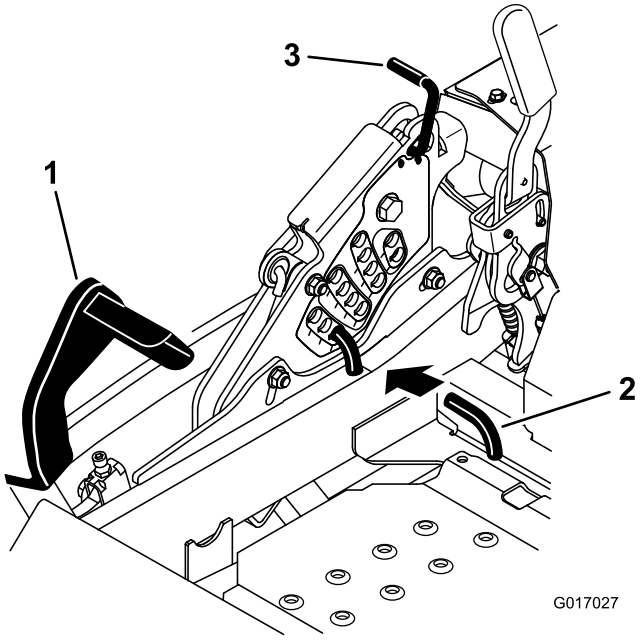


**Figure 84**

1. Deck lift pedal
2. Height of cut pin
3. Transport lock

6. Insert the height adjustment pin into the 7.6 cm (3 inch) cutting height location.
7. Release the transport lock and allow the deck to lower to the cutting height.
8. Raise the discharge chute.
9. On both sides of the deck, measure from the level surface to the front tip of the blade (Postion A). The measurement should read 7.6 mm (3 inches) (Figure 85).

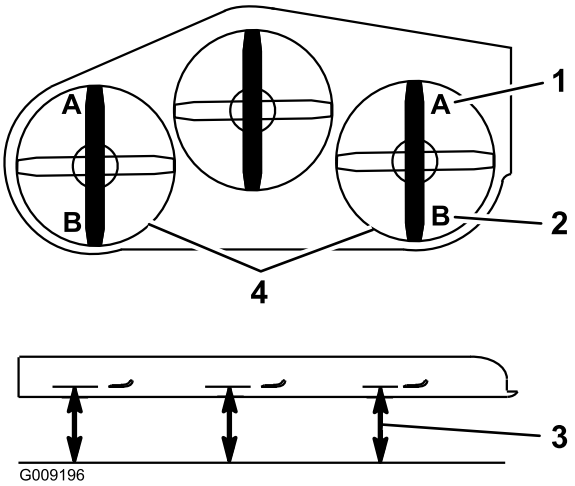


**Figure 85**

1. 7.6 cm (3 inches) at A is correct
2. 8.3 cm (3 1/4 inches) at B is correct
3. Measure here from the blade tip to hard surface
4. Measure at A and B on both sides

10. If needed, loosen the whizlock nut on the side of the yoke and the jam nut on top. Fine tune the screw adjuster by turning it to get 7.6 mm (3 inch) height (see Figure 86).

    To increase the height, turn the adjuster screw clockwise; to decrease, turn counterclockwise.

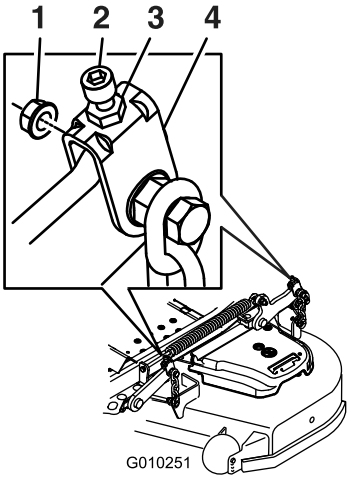


**Figure 86**

1. Whizlock nut
2. Adjuster screw
3. Jam nut
4. Yoke

11. If the front deck links do not have enough adjustment to achieve accurate cut height , the single point adjustment can be utilized to gain more adjustment.

12. To adjust the single point system, loosen the two bolts at the bottom of the height of cut plate. Refer to Figure 87.

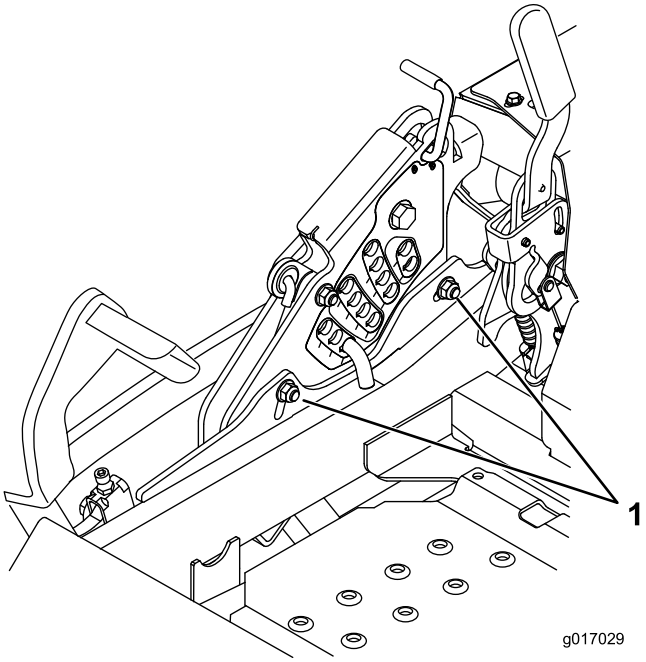


**Figure 87**

1. Bolts at the bottom of the height-of-cut plate

13. If the deck is too low, tighten the single point adjustment bolt by rotating it clockwise. If the deck is too high, loosen the single point adjustment bolt by rotating it counterclockwise (Figure 88).

    **Note:** Loosen or tighten the single point adjustment bolt enough to move the height-of-cut plate mounting bolts at least 1/3 the length of the available travel in their slots. This will regain some up and down adjustment on each of the four deck links.

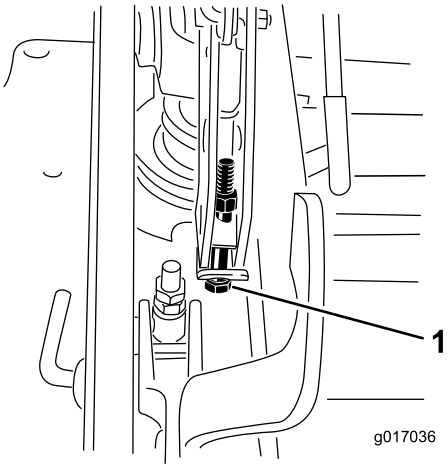


**Figure 88**

1. Single point adjustment bolt

14. Tighten the two bolts at the bottom of the height of cut plate (Figure 87). Torque to 37-45 N-m (27-33 ft-lb).

    **Note:** In most conditions, the back blade tip should be adjusted 6.4 mm (1/4 inch) higher than the front.

15. On both sides of the deck, measure from the level surface to the back tip of the blade (Postion B). The measurement should read 8.3 cm (3 1/4 inches) (Figure 85).

16. Fine tune the screw adjuster by turning it to get 8.3 mm (3–1/4 inches) height (Figure 86).

    To increase the height, turn the adjustment nut clockwise; to decrease, turn counterclockwise.

17. Measure until all four sides are the correct height. Tighten all the nuts on the deck lift arm assemblies.

18. Lower discharge chute.

# Servicing the Cutting Blades

Maintain sharp blades throughout the cutting season because sharp blades cut cleanly without tearing or shredding the grass blades. Tearing and shredding turns grass brown at the edges, which slows growth and increases the chance of disease.

Check the cutter blades daily for sharpness, and for any wear or damage. File down any nicks and sharpen the blades as necessary. If a blade is damaged or worn, replace it immediately with a genuine Toro replacement blade. For

convenient sharpening and replacement, you may want to keep extra blades on hand.

**⚠ DANGER**

**A worn or damaged blade can break, and a piece of the blade could be thrown into the operator's or bystander's area, resulting in serious personal injury or death.**

- **Inspect the blade periodically for wear or damage.**
- **Replace a worn or damaged blade.**

## Before Inspecting or Servicing the Blades

Park the machine on a level surface, disengage the blade control switch (PTO), and set the parking brake. Turn the ignition key to off. Remove the key.

## Inspecting the Blades

**Service Interval:** Before each use or daily

1. Inspect the cutting edges (Figure 89). If the edges are not sharp or have nicks, remove and sharpen the blades. Refer to Servicing the Cutting Blades (page 54).
2. Inspect the blades, especially the curved area (Figure 89). If you notice any damage, wear, or a slot forming in this area (Figure 89), immediately install a new blade.

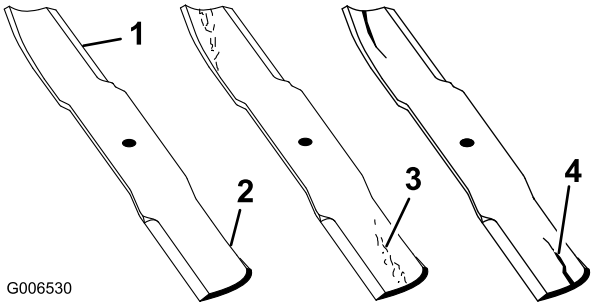


**Figure 89**

1. Cutting Edge
2. Curved Area
3. Wear/slot Forming
4. Crack

## Checking for Bent Blades

1. Disengage the blade control switch (PTO), move the motion control levers to the neutral locked position and set the parking brake.
2. Stop the engine, remove the key, and wait for all moving parts to stop before leaving the operating position.
3. Rotate the blades until the ends face forward and backward (Figure 90). Measure from a level surface to the cutting edge, position **A**, of the blades (Figure 90). Note this dimension.

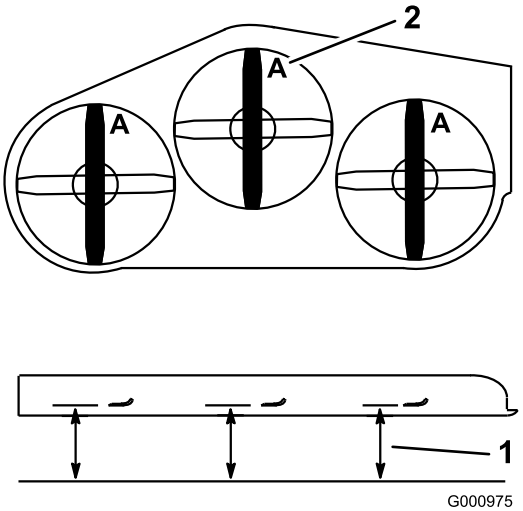


**Figure 90**

1. Measure here from blade to hard surface
2. Position A

4. Rotate the opposite ends of the blades forward.
5. Measure from a level surface to the cutting edge of the blades at the same position as in step 3 above. The difference between the dimensions obtained in steps 3 and 4 must not exceed 1/8 inch (3 mm). If this dimension exceeds 1/8 inch (3 mm), the blade is bent and must be replaced; refer to Removing the Blades (page 56) and Sharpening the Blades (page 56).

**⚠ WARNING**

**A blade that is bent or damaged could break apart and could seriously injure or kill you or bystanders.**

- **Always replace bent or damaged blade with a new blade.**
- **Never file or create sharp notches in the edges or surfaces of blade.**

## Removing the Blades

Blades must be replaced if a solid object is hit, if the blade is out of balance or is bent. To ensure optimum performance and continued safety conformance of the machine, use genuine Toro replacement blades. Replacement blades made by other manufacturers may result in non-conformance with safety standards.

1. Hold the blade end using a rag or thickly-padded glove.
2. Remove the blade bolt, curved washer, and blade from the spindle shaft (Figure 91).

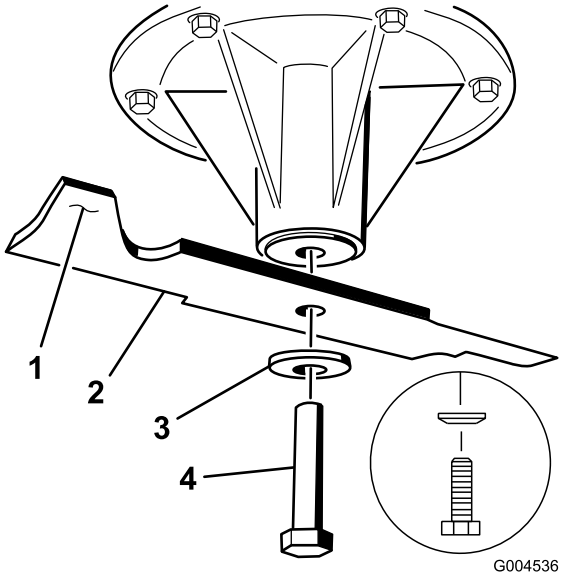


**Figure 91**

1. Sail Area of Blade
2. Blade
3. Curved washer
4. Blade Bolt

## Sharpening the Blades

1. Use a file to sharpen the cutting edge at both ends of the blade (Figure 92).

   **Note:** Maintain the original angle.

   **Note:** The blade retains balance if the same amount of material is removed from both cutting edges.

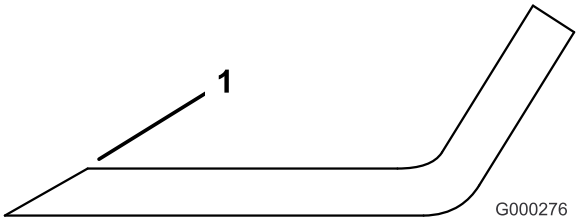


**Figure 92**

1. Sharpen at the original angle

2. Check the balance of the blade by putting it on a blade balancer (Figure 93).

   **Note:** If the blade stays in a horizontal position, the blade is balanced and can be used.

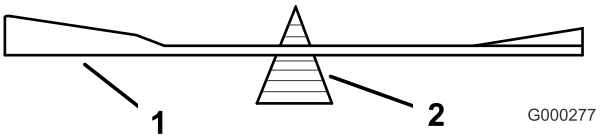


**Figure 93**

1. Blade
2. Balancer

3. If the blade is not balanced, file some metal off the end of the sail area only (Figure 93).
4. Repeat this procedure until the blade is balanced.

## Installing the Blades

1. Install the blade onto the spindle shaft (Figure 94).

   **Important: The curved part of the blade must be pointing upward toward the inside of the mower to ensure proper cutting.**

2. Install the spring disk and blade bolt (Figure 94).

   **Note:** The spring-disk cone must be installed toward the bolt head (Figure 94).

3. Torque the blade bolt to 115 to 150 N-m (85 to 110 ft-lb).

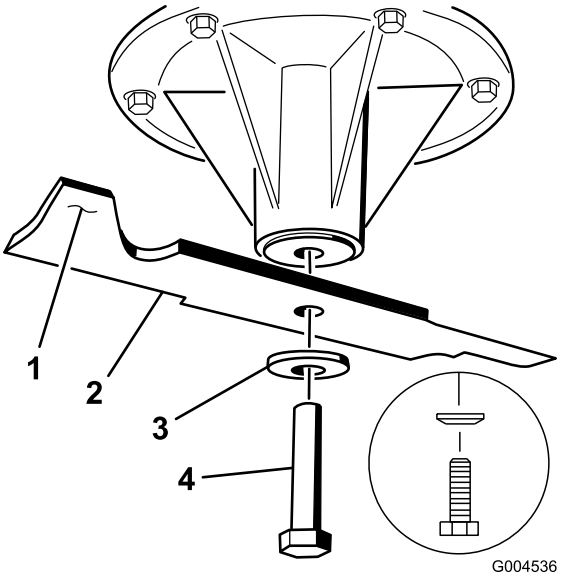


**Figure 94**

1. Sail area of the blade
2. Blade
3. Spring disk
4. Blade bolt

# Removing the Mower Deck

Lock out the spring loaded deck arms before servicing or removing the mower deck.

**⚠ WARNING**

**Deck lift arm assemblies have stored energy. Removing the deck with out releasing the stored energy can cause serious injury or death.**

**Do not attempt to disassemble the deck from the front frame without locking out the stored energy.**

1. Stop the engine, wait for all of the moving parts to stop, remove the key, and engage parking brake.
2. Remove the height adjustment pin and lower the deck to the ground.
3. Place the height adjustment pin in the 7.6 cm (3 inch) cutting height location.

   **Note:** This locks the deck lift arms in the lowest position when the deck is removed and the stored energy in the deck spring is released.
4. Remove the belt covers.
5. Lift up the floor pan and insert a ratchet into the square hole in the deck idler (Figure 95).
6. Rotate the deck idler clockwise and remove the mower belt (Figure 95).

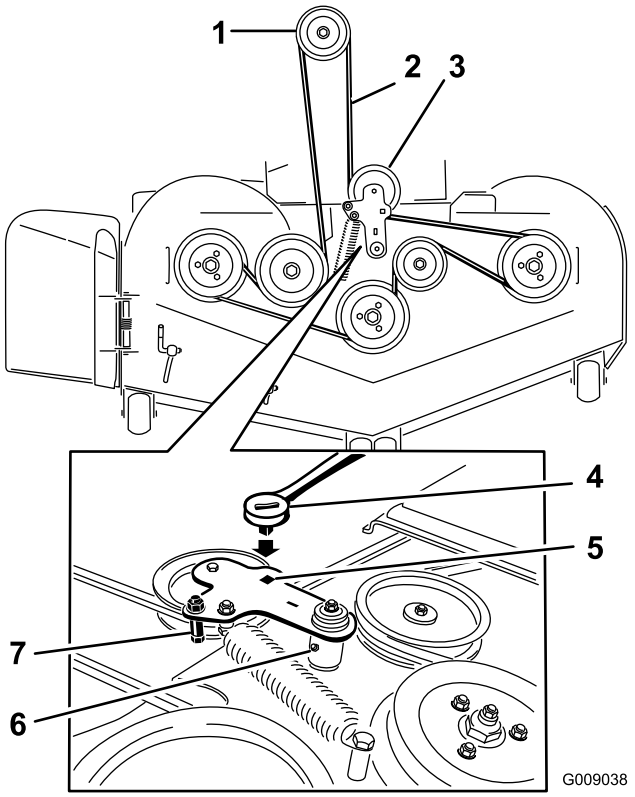


**Figure 95**

1. Clutch pulley
2. Mower belt
3. Spring loaded idler pulley
4. Ratchet
5. Square hole in the idler arm for the ratchet
6. Idler grease fitting
7. Belt guide

7. Remove and retain the hardware on both sides of the deck as shown in Figure 96.

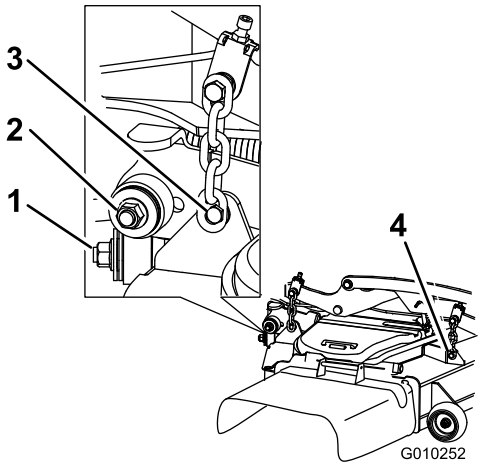


**Figure 96**

1. Right stabilizer
2. Deck strut (right side shown)
3. Remove the rear deck lift attachment shoulder bolt and nut.
4. Remove the front deck lift attachment shoulder bolt and nut.

8. Raise the deck struts and secure them in the up position.

9. Slide the deck out to the right side of the machine.

## Replacing the Grass Deflector

**⚠ WARNING**

**An uncovered discharge opening could allow the lawn mower to throw objects in the operator's or bystander's direction and result in serious injury. Also, contact with the blade could occur.**

**Never operate the lawn mower unless you install a cover plate, a mulch plate, grass deflector, or bagger.**

1. Remove the locknut, bolt, spring, and spacer holding the deflector to the pivot brackets (Figure 97).

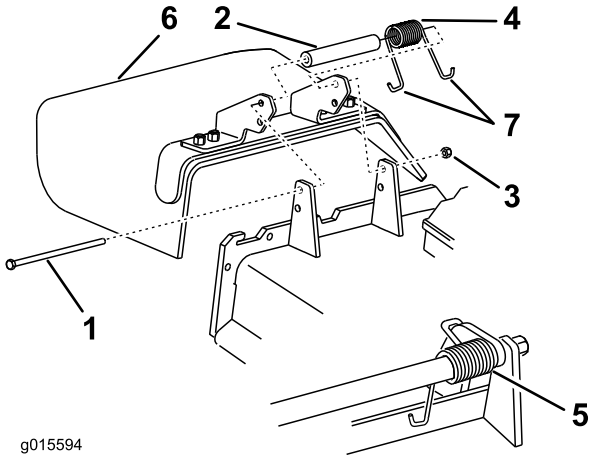


**Figure 97**

1. Bolt
2. Spacer
3. Locknut
4. Spring
5. Spring installed
6. Grass deflector
7. **J** hook end of spring

2. Remove damaged or worn grass deflector.
3. Place spacer and spring onto the grass deflector. Place one **J** end of spring behind deck edge.

   **Note:** Make sure that one **J** end of spring is installed behind deck edge before installing the bolt as shown in Figure 97.
4. Install the bolt and nut.
5. Place one **J** hook end of spring around grass deflector (Figure 97).

   **Important: The grass deflector must be able to rotate. Lift the deflector up to the full open position and ensure that it rotates into the full down position.**

# *Cleaning*

## Cleaning Under the Mower

**Service Interval:** Before each use or daily

1. Disengage the blade control switch (PTO), move the motion control levers to the neutral locked position, and set the parking brake.
2. Stop the engine, remove the key, and wait for all moving parts to stop before leaving the operating position.
3. Raise the mower to the transport position.

## Waste Disposal

Engine oil, batteries, hydraulic oil, and engine coolant are pollutants to the environment. Dispose of these according to your state and local regulations.

# Storage

## Cleaning and Storage

1. Disengage the power take off (blade control switch (PTO), set the parking brake, and turn the ignition key to the off position. Remove the key.
2. Remove grass clippings, dirt, and grime from the external parts of the entire machine, especially the engine and hydraulic system. Clean dirt and chaff from the outside of the engine cylinder head fins and blower housing.

   **Important: You can wash the machine with mild detergent and water. Do not pressure wash the machine. Avoid excessive use of water, especially near the control panel, engine, hydraulic pumps, and motors.**
3. Check the brake; refer to Brake Maintenance (page 45).
4. Service the air cleaner; refer to Servicing the Air Cleaner (page 31).
5. Grease the machine; refer to Lubricating the Machine (page 29).
6. Change the crankcase oil; refer to Changing the Engine Oil (page 34).
7. Check the tire pressure; refer to Checking the Tire Pressure (page 41).
8. Change the hydraulic filters; refer to Servicing the Hydraulic System (page 51).
9. Charge the battery; refer to Servicing the Battery (page 38).
10. Scrape any heavy buildup of grass and dirt from the underside of the mower, then wash the mower with a garden hose.

    **Note:** Run the machine with the blade control switch (PTO) engaged and the engine at high idle for 2 to 5 minutes after washing.
11. Check the condition of the blades; refer to Servicing the Cutting Blades (page 54).
12. Prepare the machine for storage when non-use occurs over 30 days. Prepare the machine for storage as follows:

    A. Add a petroleum based stabilizer/conditioner to fuel in the tank. Follow mixing instructions from the stabilizer manufacturer. Do not use an alcohol based stabilizer (ethanol or methanol).

    **Note:** A fuel stabilizer/conditioner is most effective when mixed with fresh fuel and used at all times.

    B. Run the engine to distribute conditioned fuel through the fuel system (5 minutes).

    C. Stop the engine, allow it to cool, and drain the fuel tank; refer to Servicing the Fuel Tank (page 37) in the Maintenance Section.

    D. Restart the engine and run it until it stops.

    E. Dispose of fuel properly. Recycle as per local codes.

    **Important: Do not store stabilizer/conditioned fuel over 90 days.**
13. Check and tighten all bolts, nuts, and screws. Repair or replace any part that is damaged.
14. Paint all scratched or bare metal surfaces. Paint is available from your Authorized Service Dealer.
15. Store the machine in a clean, dry garage or storage area. Remove the key from the ignition switch and keep it out of reach of children or other unauthorized users. Cover the machine to protect it and keep it clean.

# Troubleshooting

| Problem | Possible Cause | Corrective Action |
|---|---|---|
| The starter does not crank. | 1. The blade control switch (PTO) is engaged.<br>2. The parking brake is not on.<br>3. The drive levers are not in neutral lock position.<br>4. The operator is not seated.<br>5. The battery is dead.<br>6. The electrical connections are corroded or loose.<br>7. The fuse is blown.<br>8. The relay or switch is defective. | 1. Move the blade control switch (PTO) to disengaged.<br>2. Set the parking brake.<br>3. Ensure that the drive levers are in the neutral lock position.<br>4. Sit on the seat.<br>5. Charge the battery.<br>6. Check the electrical connections for good contact.<br>7. Replace the fuse.<br>8. Contact an Authorized Service Dealer. |
| The engine will not start, starts hard, or fails to keep running | 1. The fuel tank is empty.<br>2. The fuel shutoff valve is closed.<br>3. The oil level in the crankcase is low.<br>4. The throttle and choke are not in the correct position.<br>5. There is dirt in fuel filter.<br>6. There is dirt, water, or stale fuel is in the fuel system.<br>7. The air cleaner is dirty.<br>8. The seat switch is not functioning properly.<br>9. The electrical connections are corroded, loose or faulty.<br>10. The relay or switch is defective.<br>11. The spark plug is faulty.<br>12. The spark plug wire is not connected. | 1. Fill the fuel tank.<br>2. Open the fuel shutoff valve.<br>3. Add oil to the crankcase.<br>4. Be sure that the throttle control is midway between the “SLOW” and “FAST” positions.<br>5. Replace the fuel filter.<br>6. Contact an Authorized Service Dealer.<br>7. Clean or replace the air cleaner element.<br>8. Check the seat switch indicator. Replace the seat if needed.<br>9. Check the electrical connections for good contact. Clean the connector terminals thoroughly with electrical contact cleaner, apply dielectric grease, and reconnect.<br>10. Contact an Authorized Service Dealer.<br>11. Clean, adjust, or replace spark plug.<br>12. Check the spark plug wire connection. |
| The engine loses power. | 1. The engine load is excessive.<br>2. The air cleaner is dirty.<br>3. The oil level in the crankcase is low.<br>4. The cooling fins and air passages above the engine are plugged.<br>5. The vent hole in the fuel cap is plugged.<br>6. There is dirt in the fuel filter.<br>7. There is dirt, water, or stale fuel is in the fuel system. | 1. Reduce the ground speed.<br>2. Clean the air cleaner element.<br>3. Add oil to the crankcase.<br>4. Remove the obstruction from the cooling fins and air passages.<br>5. Clean or replace the fuel cap.<br>6. Replace the fuel filter.<br>7. Contact an Authorized Service Dealer. |
| The engine overheats. | 1. The engine load is excessive.<br>2. The oil level in the crankcase is low.<br>3. The cooling fins and air passages above the engine are plugged. | 1. Reduce the ground speed.<br>2. Add oil to the crankcase.<br>3. Remove the obstruction from the cooling fins and air passages. |
| The mower pulls left or right (with levers fully forward) | 1. The tracking needs adjustment<br>2. The tire pressure in drive tires not correct. | 1. Adjust the tracking.<br>2. Adjust tire pressure in the drive tires. |

| Problem | Possible Cause | Corrective Action |
|---|---|---|
| The machine does not drive. | 1. The by pass valves is not closed tight.<br>2. The pump belt is worn, loose or broken.<br>3. The pump belt is off a pulley.<br>4. The idler sprint is broken or missing.<br>5. The hydraulic oil level is low or too hot. | 1. Tighten the by pass valves.<br>2. Change the belt.<br>3. Change the belt.<br>4. Replace the spring.<br>5. Add hydraulic oil to reservoirs or let it cool down. |
| There is abnormal vibration. | 1. The cutting blade(s) is/are bent or unbalanced.<br>2. The blade mounting bolt is loose.<br>3. The engine mounting bolts are loose.<br>4. The engine pulley, idler pulley, or blade pulley is loose.<br>5. The engine pulley is damaged.<br>6. The blade spindle is bent.<br>7. The motor mount is loose or worn. | 1. Install new cutting blade(s).<br>2. Tighten the blade mounting bolt.<br>3. Tighten the engine mounting bolts.<br>4. Tighten the appropriate pulley.<br>5. Contact an Authorized Service Dealer.<br>6. Contact an Authorized Service Dealer.<br>7. Contact an Authorized Service Dealer. |
| Mowing is resulting in uneven cutting height. | 1. The blade(s) not sharp.<br>2. The cutting blade(s) is/are bent.<br>3. The mower deck is not level.<br>4. The underside of mower is dirty.<br>5. The tire pressure is not correct.<br>6. The blade spindle bent. | 1. Sharpen the blade(s).<br>2. Install new cutting blade(s).<br>3. Level the mower deck from side-to-side and front-to-rear.<br>4. Clean the underside of the mower.<br>5. Adjust the tire pressure.<br>6. Contact an Authorized Service Dealer. |
| The blades do not rotate. | 1. The mower deck belt is worn, loose or broken.<br>2. The mower deck belt is off pulley.<br>3. The pump drive belt is worn, loose or broken.<br>4. The idler spring is broken or missing. | 1. Install a new deck belt.<br>2. Install the mower deck pulley and check the idler pulley, idler arm, and spring for correct position and function.<br>3. Check the belt tension or install a new belt.<br>4. Replace the spring. |
| The clutch will not engage. | 1. The fuse is blown.<br>2. There is low voltage supply at the clutch.<br>3. The coil is damaged.<br>4. There is inadequate current supply.<br>5. The rotor/armature airgap is too large. | 1. Replace the fuse. Check coil resistance, battery charge, charging system, and wiring connections and replace if necessary.<br>2. Check coil resistance, battery charge, charging system, and wiring connections and replace if necessary.<br>3. Replace the clutch.<br>4. Repair or replace the clutch lead wire or electrical system. Clean the connector contacts.<br>5. Remove the shim or replace the clutch. |

# Schematics

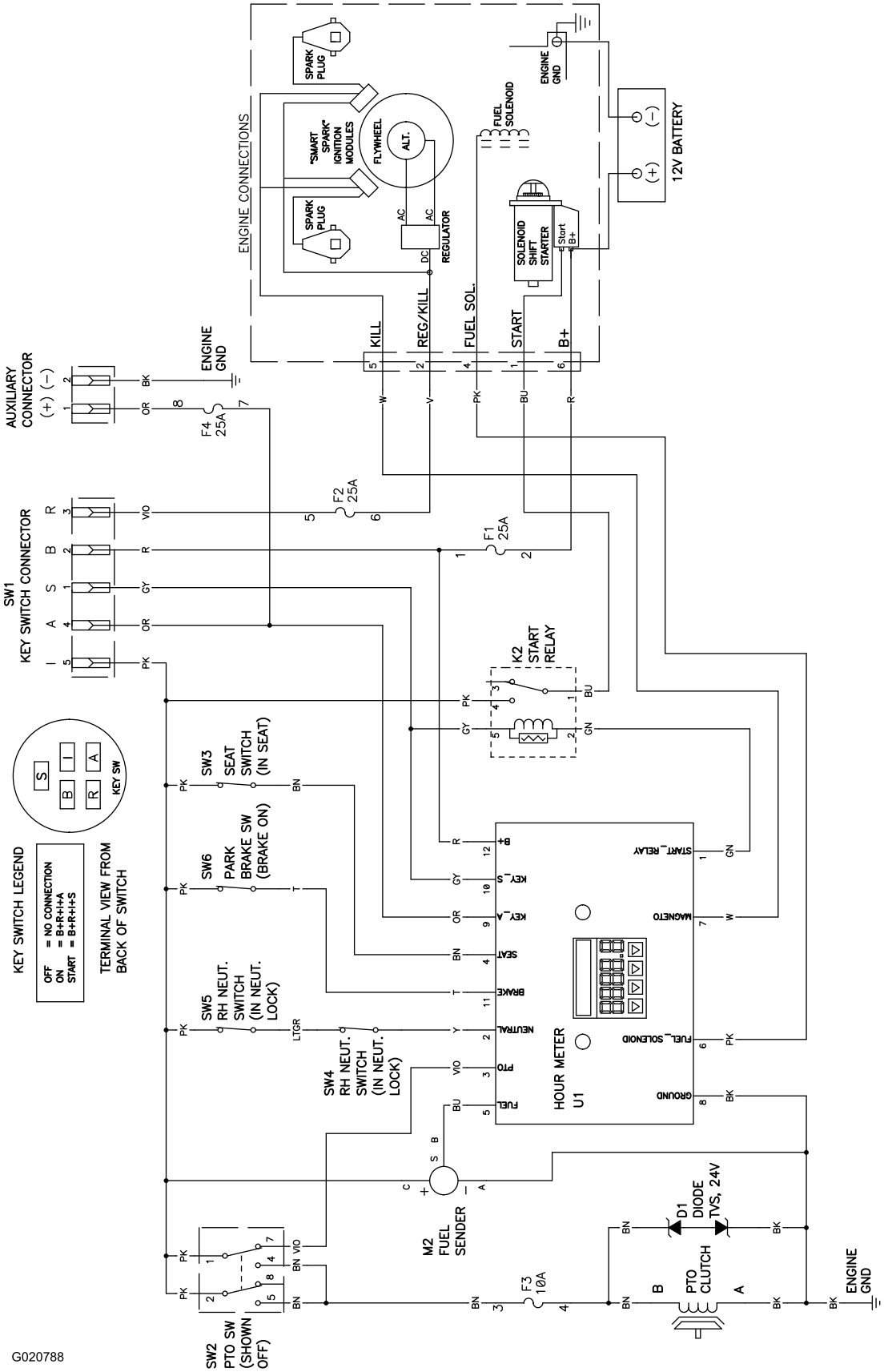


**Electrical Schematic (Rev. A)**

# Notes:

# The Toro Total Coverage Warranty

A Limited Warranty (see warranty periods below)

Landscape
Contractor
Equipment (LCE)

## Conditions and Products Covered

The Toro Company and its affiliate, Toro Warranty Company, pursuant to an agreement between them, jointly promise to the original purchaser to repair the Toro Products listed below if defective in materials or workmanship.

The following time periods apply from the date of purchase by the original owner:

| Products | Warranty Period |
|---|---|
| 21 in. Mowers | 2 years Residential Use[1]<br>1 year Commercial Use |
| • Engines[4] | Honda – 2 years<br>Kawasaki – 3 years |
| 30 in. Mowers | 2 years Residential Use[1]<br>1 year Commercial Use |
| • Engines[4] | Kawasaki – 3 years |
| Mid-Size Walk-Behind Mowers | 2 years |
| • Engines[4] | Kawasaki – 3 years |
| Grand Stand® Mowers | 5 years or 1,200 hours[2] |
| • Engines[4] | 3 years |
| • Frame | Lifetime (original owner only)[3] |
| Z Master® 2000 Series Mowers | 4 years or 500 hours[2] |
| • Engines[4] | 3 years |
| • Frame | Lifetime (original owner only)[3] |
| Z Master® 3000 Series Mowers | 5 years or 1,200 hours[2] |
| • Engines[4] | 3 years |
| • Frame | Lifetime (original owner only)[3] |
| Z Master® 5000 Series Mowers | 5 years or 1,200 hours[2] |
| • Engines[4] | Kohler Command – 2 years<br>Kohler EFI – 3 years |
| • Frame | Lifetime (original owner only)[3] |
| Z Master® 6000 Series Mowers | 5 years or 1,200 hours[2] |
| • Engines[4] | Kawasaki – 3 years |
| • Frame | Lifetime (original owner only)[3] |
| Z Master®7000 Series Mowers | 5 years or 1,200 hours[2] |
| • Engines[4] | 2 years |
| • Frame | Lifetime (original owner only)[3] |
| All Mowers | |
| • Battery | 90 days Parts and Labor<br>1 year Parts only |
| • Belts and Tires | 90 days |
| • Attachments | 1 year |

[1]Residential use means use of the product on the same lot as your home. Use at more than one location is considered commercial use and the commercial warranty would apply.

[2]Whichever occurs first.

[3]Lifetime Frame Warranty - If the main frame, consisting of the parts welded together to form the tractor structure that other components such as the engine are secured to, cracks or breaks in normal use, it will be repaired or replaced, at Toro's option, under warranty at no cost for parts and labor. Frame failure due to misuse or abuse and failure or repair required due to rust or corrosion are not covered.

[4]Some engines used on Toro Products are warranted by the engine manufacturer.

## Instructions for Obtaining Warranty Service

If you think that your Toro Product contains a defect in materials or workmanship, follow this procedure:

1. Contact any Authorized Toro Service Dealer to arrange service at their dealership. To locate a dealer convenient to you, refer to the Yellow Pages of your telephone directory (look under “Lawn Mowers”) or access our web site at www.Toro.com. You may also call the numbers listed in item #3 to use the 24-hour Toro Dealer locator system.
2. Bring the product and your proof of purchase (sales receipt) to the Service Dealer. The dealer will diagnose the problem and determine if it is covered under warranty.
3. If for any reason you are dissatisfied with the Service Dealer’s analysis or with the assistance provided, contact us at:

RLC Customer Care Department
Toro Warranty Company
8111 Lyndale Avenue South
Bloomington, MN 55420-1196
888-865-5676 (U.S. Customers)
888-865-5691 (Canada customers)

## Owner Responsibilities

You must maintain your Toro Product by following the maintenance procedures described in the *Operator's Manual*. Such routine maintenance, whether performed by a dealer or by you, is at your expense.

## Items and Conditions Not Covered

There is no other express warranty except for special emission system coverage and engine warranty coverage on some products. This express warranty does not cover the following:

- Cost of regular maintenance service or parts, such as filters, fuel, lubricants, oil changes, spark plugs, air filters blade sharpening or worn blades, cable/linkage adjustments, or brake and clutch adjustments
- Components failing due to normal wear
- Any product or part which has been altered or misused or neglected and requires replacement or repair due to accidents or lack of proper maintenance
- Pickup and delivery charges
- Repairs or attempted repairs by anyone other than an Authorized Toro Service Dealer
- Repairs necessary due to failure to follow recommended fuel procedure (consult *Operator's Manual* for more details)
  - Removing contaminants from the fuel system is not covered
  - Use of old fuel (more than one month old) or fuel which contains more than 10% ethanol or more that 15% MTBE
  - Failure to drain the fuel system prior to any period of non-use over one month

## General Conditions

All repairs covered by these warranties must be performed by an Authorized Toro Service Dealer using Toro approved replacement parts.

**Neither The Toro Company nor Toro Warranty Company is liable for indirect, incidental or consequential damages in connection with the use of the Toro Products covered by this warranty, including any cost or expense of providing substitute equipment or service during reasonable periods of malfunction or non-use pending completion of repairs under this warranty.**

**All implied warranties of merchantability (that the product is fit for ordinary use) and fitness for use (that the product is fit for a particular purpose) are limited to the duration of the express warranty.**

**Some states do not allow exclusions of incidental or consequential damages, or limitations on how long an implied warranty lasts, so the above exclusions and limitations may not apply to you.**

This warranty gives you specific legal rights, and you may also have other rights which vary from state to state.

## Countries Other than the United States or Canada

Customers who have purchased Toro products outside the United States or Canada should contact their Toro Distributor (Dealer) to obtain guarantee policies for your country, province, or state. If for any reason you are dissatisfied with your Distributor's service or have difficulty obtaining guarantee information, contact the Toro importer. If all other remedies fail, you may contact us at Toro Warranty Company.

**Australian Consumer Law:** Australian customers will find details relating to the Australian Consumer Law either inside the box or at your local Toro Dealer.