Form No. 3380-807 Rev A

TORO®

Count on it.

Parts Catalog

Z Master® Professional 5000 Series Riding Mower

with 60in TURBO FORCE® Side Discharge Mower

Model No. 74930—Serial No. 314000001 and Up

Register at www.Toro.com.
Original Instructions (EN)

3380-807 A

Ordering Replacement Parts

To order replacement parts, please supply the part number, the quantity, and the description of each part desired.

Understanding Reference Numbers

Each identified part in an illustration has a reference number. The reference number for a part also appears in the parts list, along with other information about the part.

This catalog uses two special reference number formats, one to indicate parts in a service assembly and another to indicate the quantity of a given part in an illustration.

Service Assembly Reference Numbers

Parts in service assemblies have reference numbers in the form a:b. The a represents the reference number of the entire service assembly and the b represents a sequential number unique to each part within the service assembly.

For example, a wheel assembly might be identified by reference number 6, the tire by 6:1, the valve by 6:2, and the wheel by 6:3. When you order the assembly identified by reference number 6, you receive all parts identified by reference numbers 6:1,6:2, and 6:3. However, you may also order any part individually. Reference numbers of this type appear in illustration and in parts lists.

Reference Numbers Indicating Quantity

In an illustration, if a reference number indicates more than one part, the reference number has the form nX y. The n represents the quantity of the part, the X is the multiplication symbol, and the y represents the reference number.

For example, in an illustration, the reference number 2X 37 means that two of the parts identified by reference number 37 are indicated.

List of Abbreviations

AR: as required

ASM: assembly

BBC: blade brake control

BHTF: button head thread forming

CARR: carriage

CCW: counter clockwise

CW: clockwise

DEG: degrees

DPA: Dual Point Adjustment

ECM: electronic control module

EXT: external

FH: flat head

GA: gauge

HD: heavy-duty

HF: hex flange

HH: hex head

HHF: hex head flange

HHFTF: hex head flange thread forming

HJ: hex jam

HLH: hex lag head

HOC: height-of-cut

HSBH: hex socket button head

HSFH: hex socket flat head

HSH: hex socket head

HWH: hex washer head

HWHTF: hex washer head thread forming

HYD: hydraulic

LH: left hand

LP: Liquefied Petroleum Gas

LPG: Liquefied Petroleum Gas

NI: nylon insert

NPTF: national pipe thread fine

PFH: phillips flat head

PPH: phillips pan head

PPHTF: phillips pan head thread forming

PRH: phillips round head

PTH: phillips truss head

PTO: power-take-off

RH: right hand

ROPS: roll-over protection system

RRB: rear roller brush

SFH: slotted fillister head

SHH: slotted hex head

SHWH: slotted hex washer head

SPH: slotted pan head

SQH: square head

SRH: slotted round head

STD: standard

TAP: self tapping

TTH: torx truss head

Contents

Frame and Caster Wheel Assembly 4
Roll-Over Protection System Assembly No. 116-0231 6
Caster Fork and Wheel Assembly 8
Hydraulic Pump, Idler and Belt Assembly 10
Pump Idler Assembly No. 116-1255 12
LH Hydro Assembly No. 116-6413 14
RH Hydro Assembly No. 116-6414 16
Rear Wheel and Park Brake Assembly 18
Parking Brake Handle Assembly No. 116-7551 20
Fuel Tank Mounting Assembly 22
Fuel Tank Assembly No. 116-3979 24
Seat Mount Assembly 26
Seat Assembly No. 125-3107 28
Motion Control Assembly 30
Fender, Console and Control Assembly 32
Electrical System Assembly 34
Decklift Assembly 36
Height-of-Cut Assembly No. 109-7438 38
Engine, Clutch and Muffler Assembly 40
Deck Assembly 42
Deck Decal Assembly No. 114-5815 44
Idler Assembly 46
Spindle Assembly No. 119-8560 48
Rubber Deflector Assembly No. 108-2792 50
Attachments and Accessories 52

© 2014—The Toro® Company
8111 Lyndale Avenue South
Bloomington, MN 55420

Contact us at www.Toro.com.
Printed in the USA.
All Rights Reserved

Frame and Caster Wheel Assembly

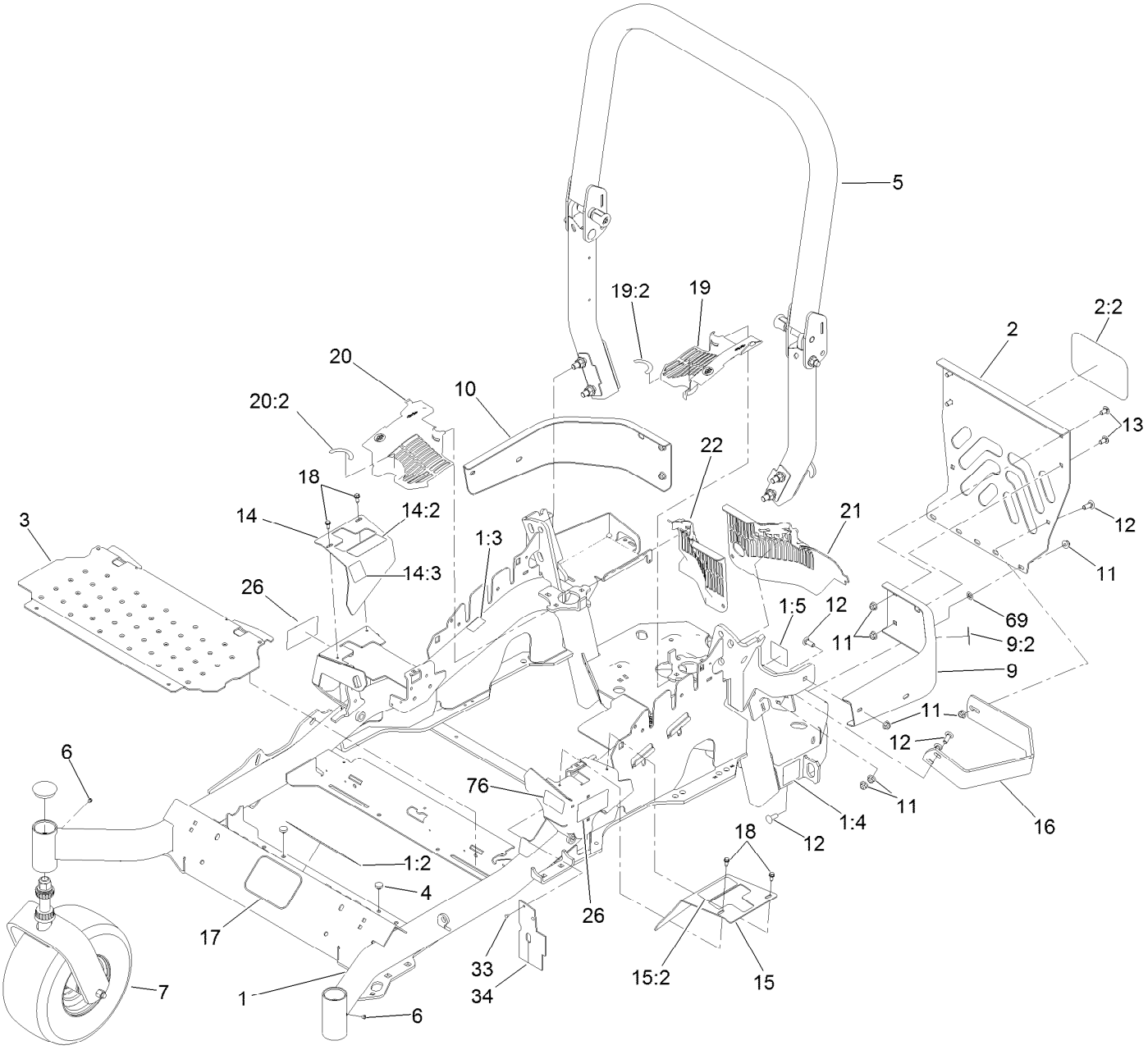

Frame and Caster Wheel Assembly (continued)

Ref.	Part Number	Qty.	Description
1	116-5902	1	Mainframe ASM
1:2	116-3303	1	Decal-Slope
1:3	103-2076	2	Decal-Caution
1:4	116-0205	2	Decal-Belt Drive
1:5	116-4858	1	Decal-Spark Arrester
2	115-7410	1	Rear Guard ASM
2:2	67-7320	1	Decal
3	116-8898-01	1	Floorpan
4	1-513658	2	Bumper
5	116-0231	1	ROPS ASM
6	1-811010	2	Plug
7		2	Caster Wheel ASM ●
9	116-0180	1	LH Bumper ASM
9:2	103-2076	1	Decal-Caution
10	116-0057-03	1	Bumper-RH
11	104-8301	11	Nut-Flange, NI
12	3231-22	7	Screw-CARR
13	3231-21	3	Screw-CARR
14	116-5899	1	RH Motion Control Cover ASM
14:2	109-7232	1	Decal-Motion Control
14:3	116-5944	1	Decal-Park Brake
15	116-0580	1	LH Motion Control Cover ASM
15:2	109-7232	1	Decal-Motion Control
16	126-2067-03	1	Guard-Muffler
17	68-3640	1	Decal
18	32144-10	4	Screw-HWH
19	116-0170	1	LH Hydro Guard ASM
19:2	116-0157	1	Decal-Hydro Oil
20	116-0171	1	RH Hydro Guard ASM
20:2	116-0157	1	Decal-Hydro Oil
21	109-9057	1	Guard-Hydro, Rear LH
22	109-9058	1	Guard-Hydro, Rear RH
26	120-5894	2	Decal
33	1-803035	2	Rivet-Pop
34	116-2362	1	Deflector-Air Flow
69	107-3154	2	Nut-Push
76	116-1654	1	Decal-Fuel Fill

● Not serviced separately

Roll-Over Protection System Assembly No. 116-0231

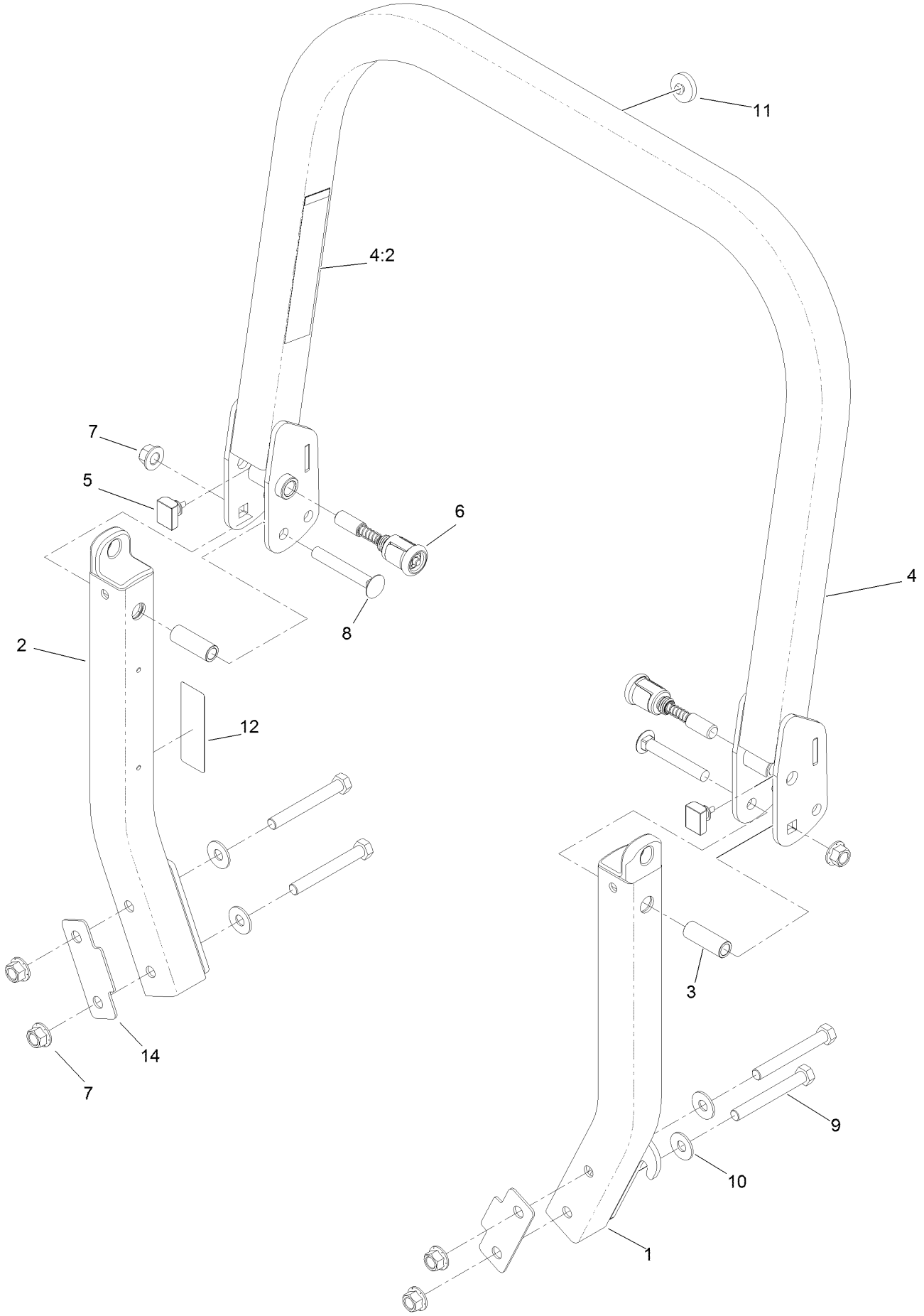

Roll-Over Protection System Assembly No. 116-0231 (continued)

Ref.	Part Number	Qty.	Description
1		1	Leg-ROPS, LH ●
2		1	Leg-ROPS, RH ●
3	109-6653	2	Spacer
4		1	Upper ROPS ASM ●
4:2	107-2102	1	Decal-Warning, Folding ROPS
5	109-5337	2	Bumper-ROPS
6	116-0104	2	Pin-Spring
7	99-5107	6	Nut-Lock
8	3233-10	2	Screw-CARR
9	325-17	4	Screw-HH
10	109-9505	4	Washer-Spring
11	109-9233	1	Bumper-Push-In, Rubber
12	116-0090	1	Decal-Caution
14	116-0960	2	Spacer

● Not serviced separately

Caster Fork and Wheel Assembly

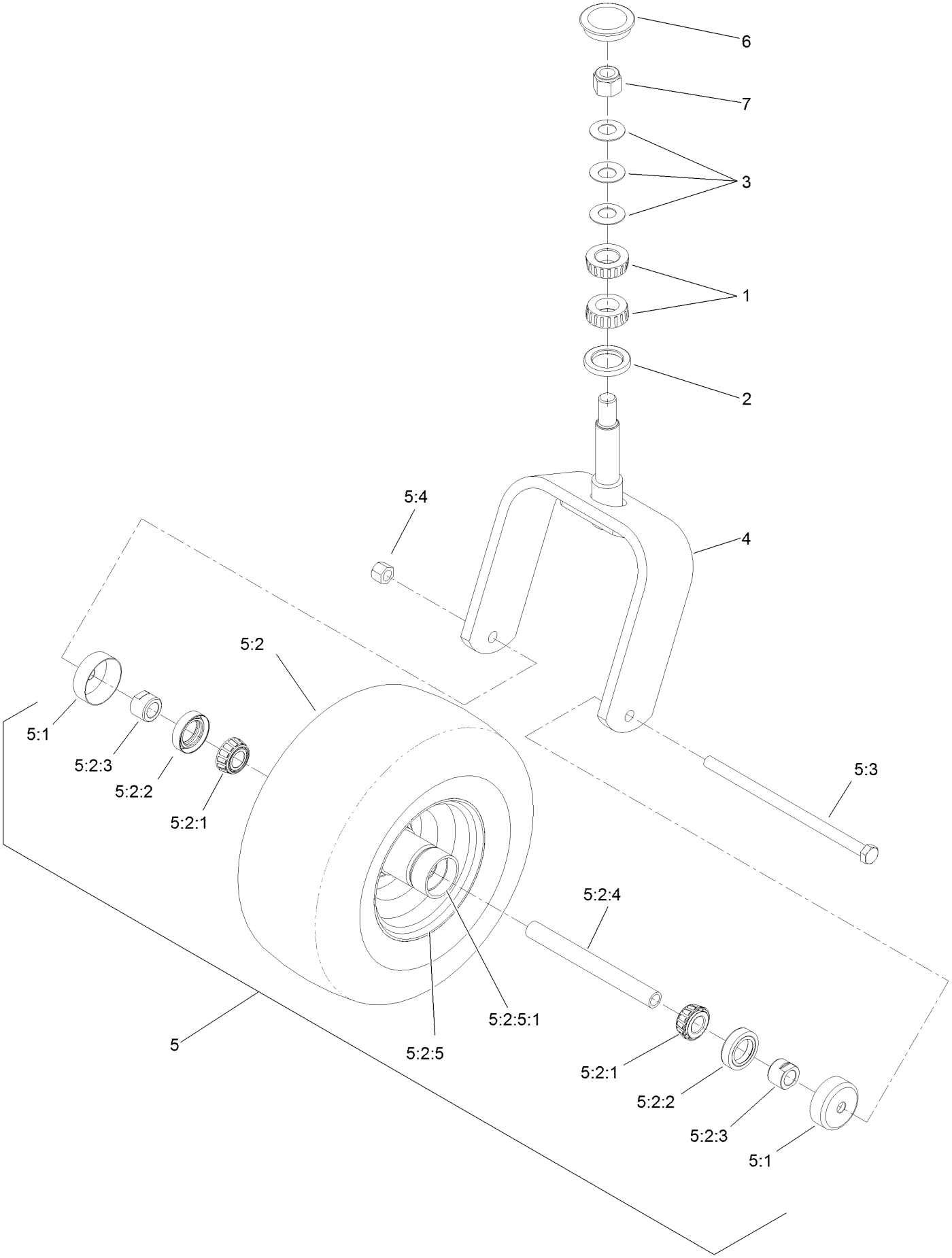

Caster Fork and Wheel Assembly (continued)

Ref.	Part Number	Qty.	Description
1	1-543509	2	Bearing-Roller, Tapered
2	116-5647	1	Seal-Grease
3	1-633508	3	Washer-Bellville
4	116-6707-01	1	Caster
5	127-9528	1	Wheel And Axle ASM
5:1	103-2768	2	Guard-Seal
5:2		1	Wheel And Bearing ASM ●
5:2:1	1-633585	2	Bearing-Cone, Taper
5:2:2	103-0063	2	Seal-Caster
5:2:3	103-3051	2	Spacer-Nut ■
5:2:4	103-5156	1	Axle-Caster
5:2:5		1	Wheel And Tire ASM ●
5:2:5:1	1-633584	1	Bearing-Cup
5:3	325-39	1	Screw-HH
5:4	3296-23	1	Nut-Lock, NI
6	103-4882	1	Cap-Grease
7	3296-51	1	Nut-Lock, NI

● Not serviced separately
■ Use Pro-Lock, Nut Type (P/N 1-840022, .5ml tube) on threads.

Hydraulic Pump, Idler and Belt Assembly

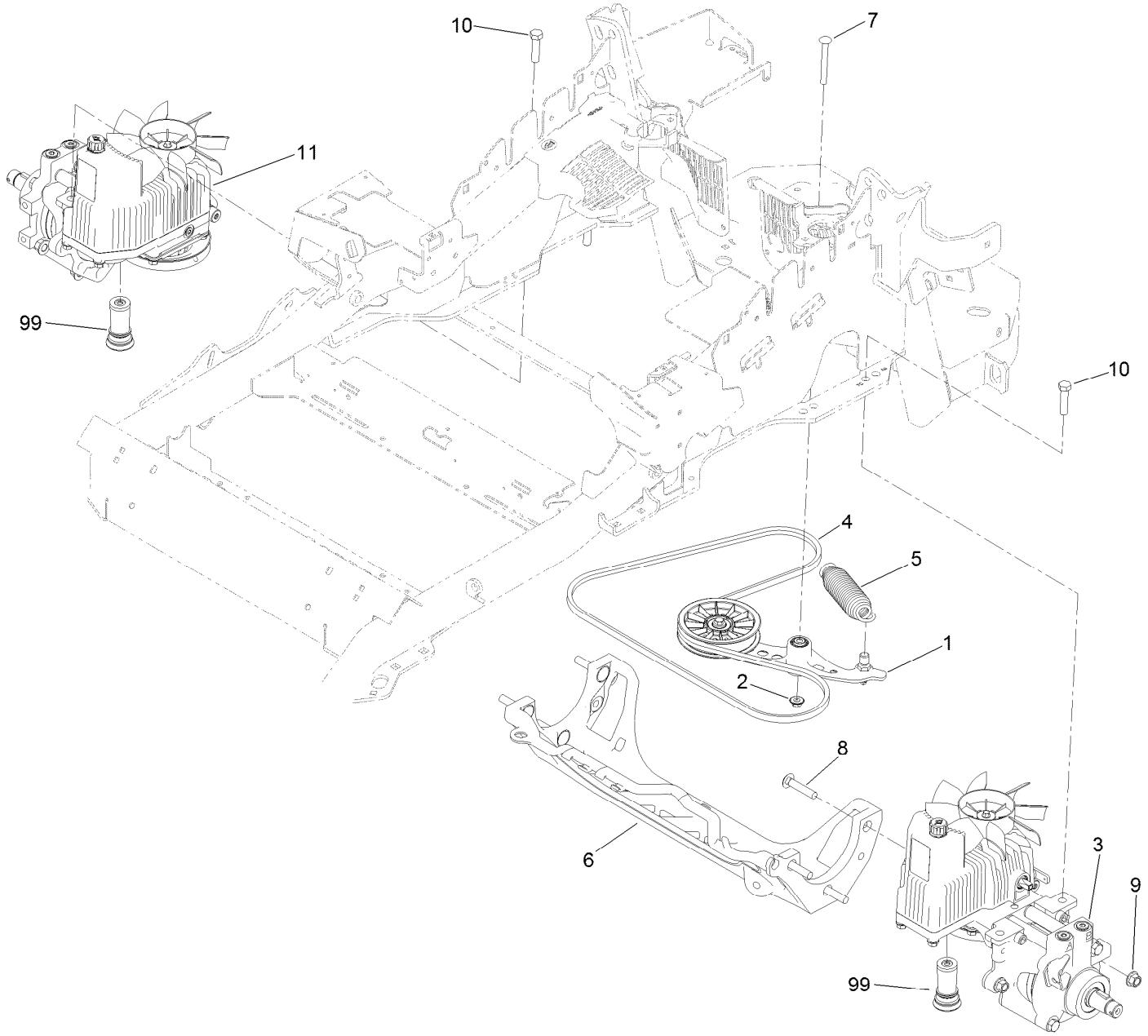

Hydraulic Pump, Idler and Belt Assembly (continued)

Ref.	Part Number	Qty.	Description
1	116-1255	1	Pump Idler ASM
2	109-6658	1	Nut-Flange, NI
3	116-6413	1	LH Hydro ASM (12Cc W/Shock)
4	109-3388	1	Belt
5	116-6317	1	Spring-Extension
6	109-9375	1	Cradle-Hydro
7	116-1502	1	Bolt-Shoulder, Carriage
8	126-0095	6	Screw-CARR
9	99-5107	6	Nut-Lock
10	325-8	4	Screw-HH
11	116-6414	1	RH Hydro ASM (12Cc W/Shock)
99	114-4713	1	Hypr-Oil 500 (Quart) ●
99	114-4714	1	Hypr-Oil 500 (Gallon) ●
99	114-4715	1	Hypr-Oil 500-5 (5 Gallon) ●
99	117-0390	1	Filter-Hydro

● Not illustrated

Pump Idler Assembly No. 116-1255

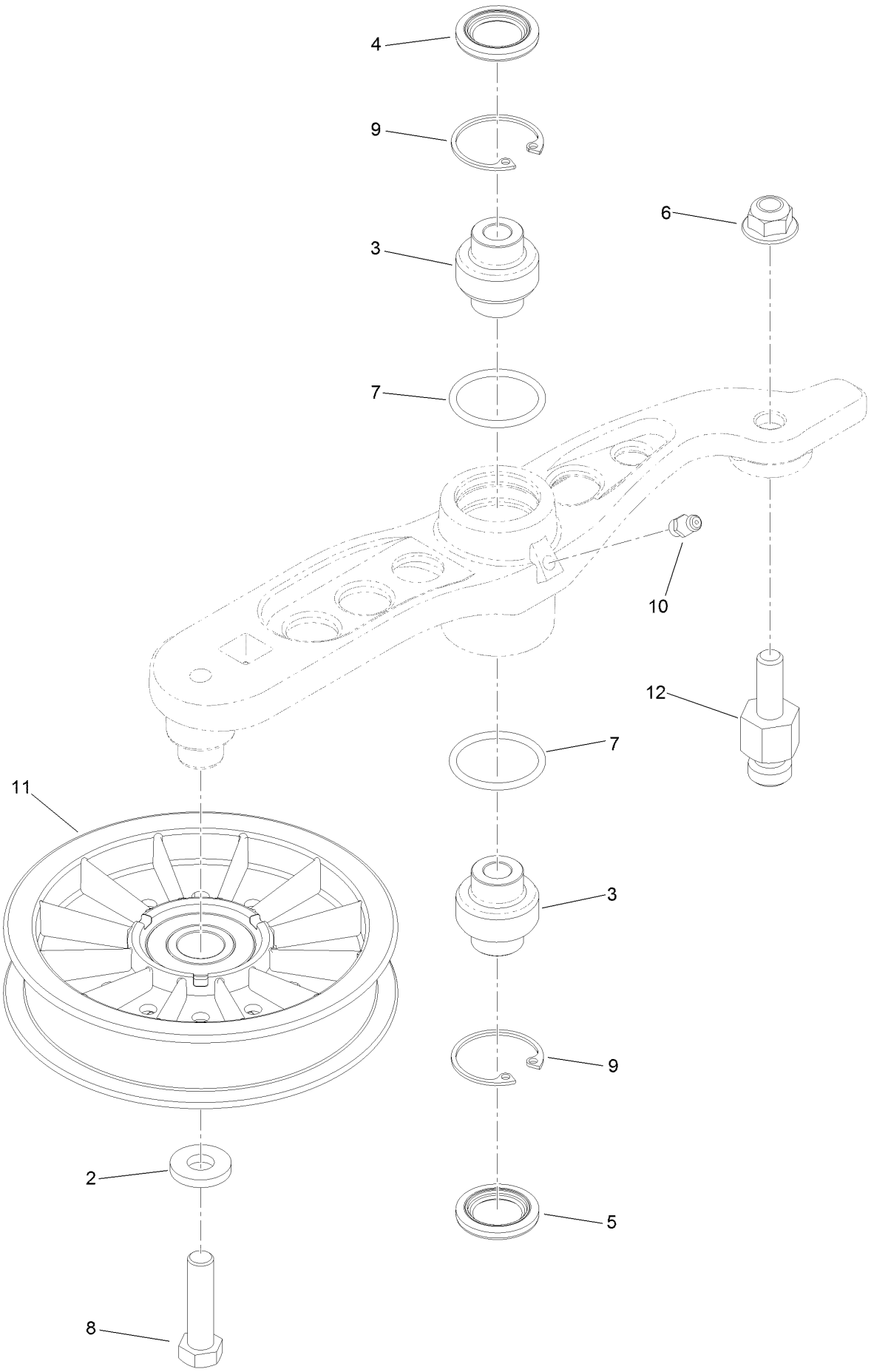

Pump Idler Assembly No. 116-1255 (continued)

Ref.	Part Number	Qty.	Description
2	43-0940	1	Spacer
3	103-3504	2	Bearing-Spherical
4	103-3505	1	Seal-Double Lip
5	103-3506	1	Seal-Single Lip
6	109-6658	1	Nut-Flange, NI
7	106-7159	2	O-Ring
8	323-8	1	Screw-HH
9	32120-10	2	Ring-Snap
10	302-19	1	Fitting-Grease
11	109-8076	1	Pulley-Idler
12	116-3467	1	Pin-Spring, Anchor

LH Hydro Assembly No. 116-6413

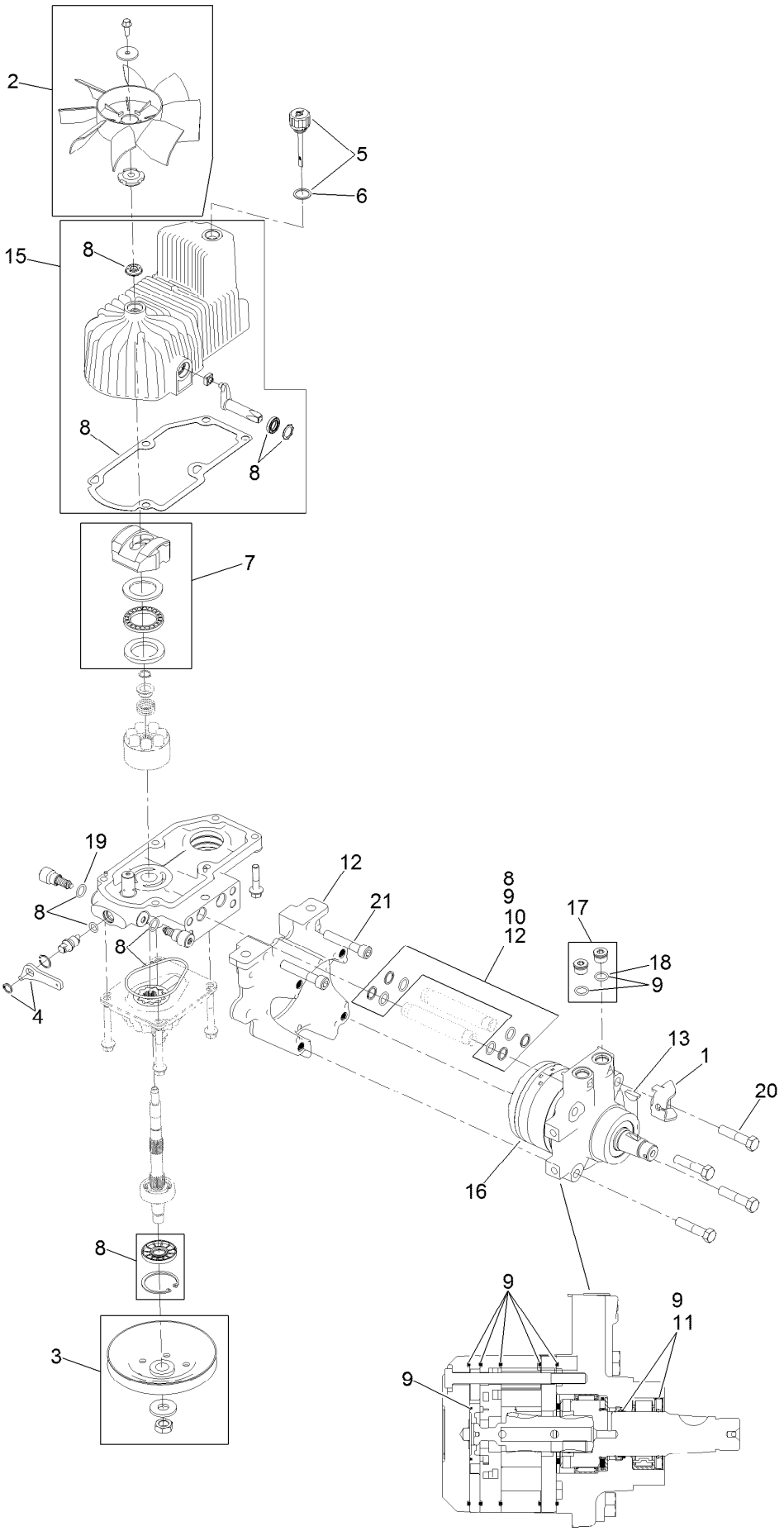

LH Hydro Assembly No. 116-6413 (continued)

Ref.	Part Number	Qty.	Description
1	116-6859	1	Bracket-Anchor, Cable
2	116-0233	1	Fan Kit
3	116-0234	1	Pulley Kit
4	116-0235	1	Handle-Bypass Valve, Hydro
5	116-0236	1	Dipstick-Hydro W/Gasket
6	116-0237	1	Gasket-Dipstick, Hydro
7	116-1367	1	Swash Block Kit
8	116-1368	1	Pump Seal Kit
9	116-1369	1	Motor Seal Kit
10	116-1370	1	Tube Seal Kit
11	116-1371	1	Output Shaft Seal Kit
12	116-5469	1	Nose Cup-Uht
13	3257-42	1	Key-Woodruff
15	116-3287	1	Housing-LH
16	116-8915	1	Motor-Hydraulic LH 240Cc
17	116-7901	1	Magnetic Plugs Service Kit
18	76-1900	2	O-Ring
19	116-8662	2	O-Ring-Check Valve
20	116-8974	4	Screw HH
21	116-8975	2	Screw-HSH
99	116-1373	1	Flow Test Kit ●

● Not illustrated

RH Hydro Assembly No. 116-6414

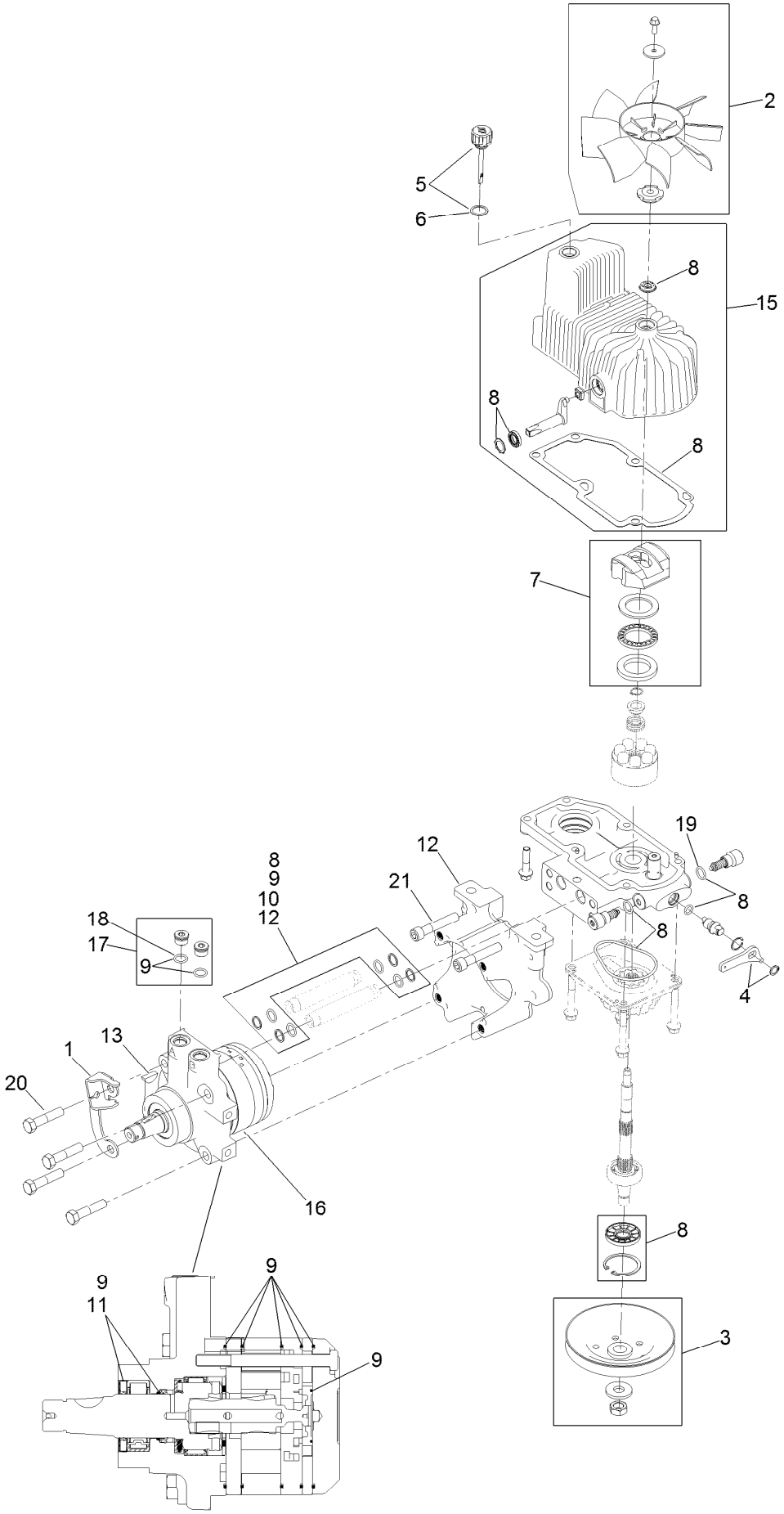

RH Hydro Assembly No. 116-6414 (continued)

Ref.	Part Number	Qty.	Description
1	116-6859	1	Bracket-Anchor, Cable
2	116-0233	1	Fan Kit
3	116-0234	1	Pulley Kit
4	116-0235	1	Handle-Bypass Valve, Hydro
5	116-0236	1	Dipstick-Hydro W/Gasket
6	116-0237	1	Gasket-Dipstick, Hydro
7	116-1367	1	Swash Block Kit
8	116-1368	1	Pump Seal Kit
9	116-1369	1	Motor Seal Kit
10	116-1370	1	Tube Seal Kit
11	116-1371	1	Output Shaft Seal Kit
12	116-5469	1	Nose Cup-Uht
13	3257-42	1	Key-Woodruff
15	116-3288	1	Housing-RH
16	116-8916	1	Motor-Hydraulic RH 240Cc
17	116-7901	1	Magnetic Plugs Service Kit
18	76-1900	2	O-Ring
19	116-8662	2	O-Ring-Check Valve
20	116-8974	4	Screw HH
21	116-8975	2	Screw-HSH
99	116-1373	1	Flow Test Kit ●

● Not illustrated

Rear Wheel and Park Brake Assembly

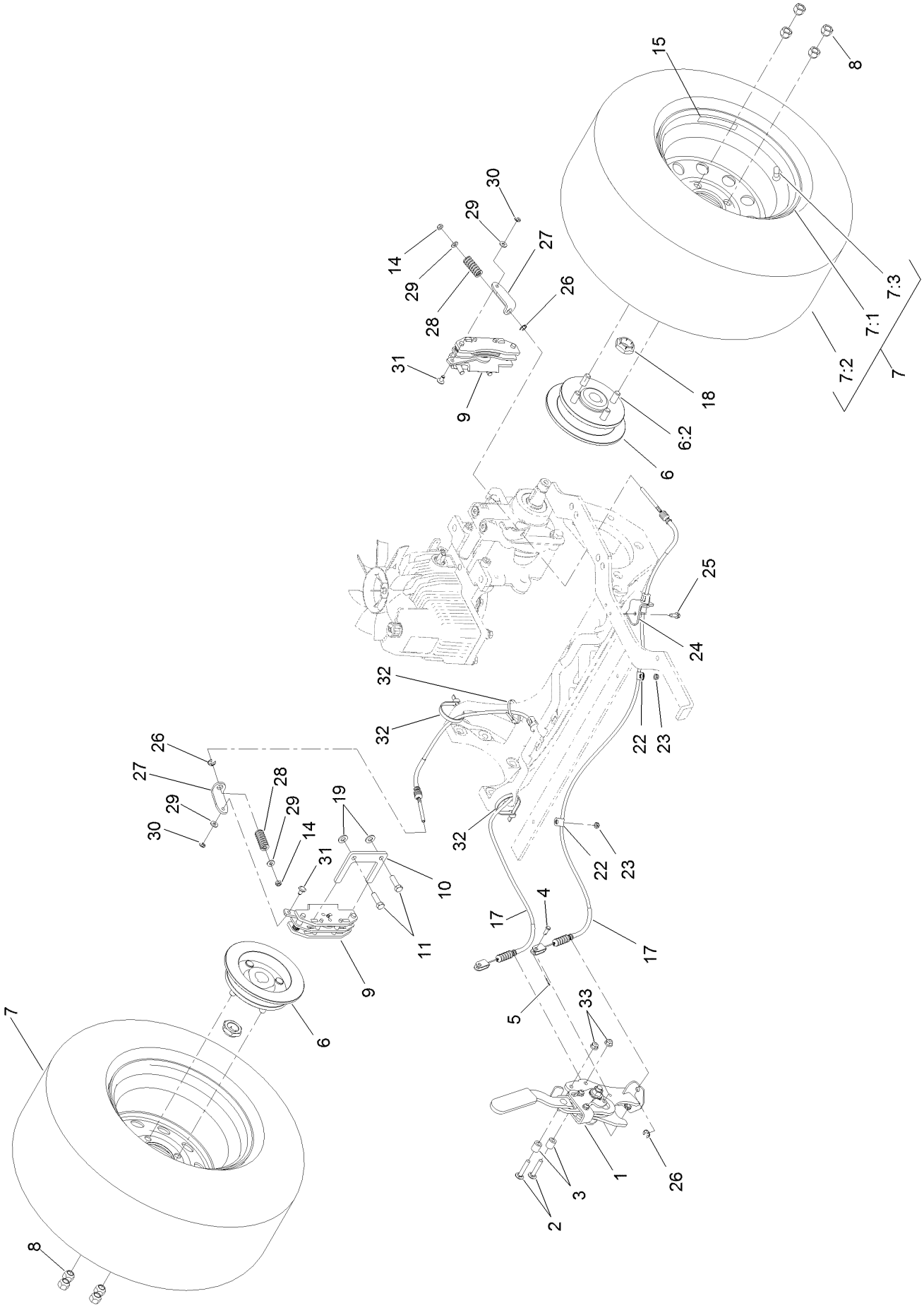

Rear Wheel and Park Brake Assembly (continued)

Ref.	Part Number	Qty.	Description
1	116-7551	1	Brake Handle ASM
2	116-0629	2	Screw-CARR
3	82-6840	2	Spacer
4	60-1730	2	Pin-Clevis
5	3272-1	2	Pin-Cotter
6	116-1746	2	Wheel Hub ASM
6:2	116-1696	4	Stud-Wheel
7	127-9520	2	Wheel And Tire ASM
7:1	127-9517	1	Wheel
7:2	1-633993	1	Tire
7:3	232-27	1	Stem-Valve
8	242-50	8	Nut-Lug
9	109-2889	2	Caliper-Brake
10	109-0958	2	Plate-Mount, Brake
11	92-5727	4	Screw-Lock, Patch
14	3296-13	2	Nut-Lock, NI
15	116-2643	2	Decal-Wheel Nut Torque
17	116-8963	2	Cable-Brake
18	116-1399	2	Locknut
19	3256-24	4	Washer-Flat
22	88-7970	2	Clip
23	3296-56	2	Nut-Lock, NI
24	116-6397	1	Bracket-Cable
25	32144-10	1	Screw-HWH
26	32120-18	4	E-Ring
27	116-6182	2	Bracket-Brake, L
28	116-6347	2	Spring-Die
29	3256-22	4	Washer-Flat
30	32151-86	2	E-Ring
31	116-6348	2	Pin-Brake
32	3334-945	2	Tie-Cable
33	104-8300	2	Nut-Flange, NI

Parking Brake Handle Assembly No. 116-7551

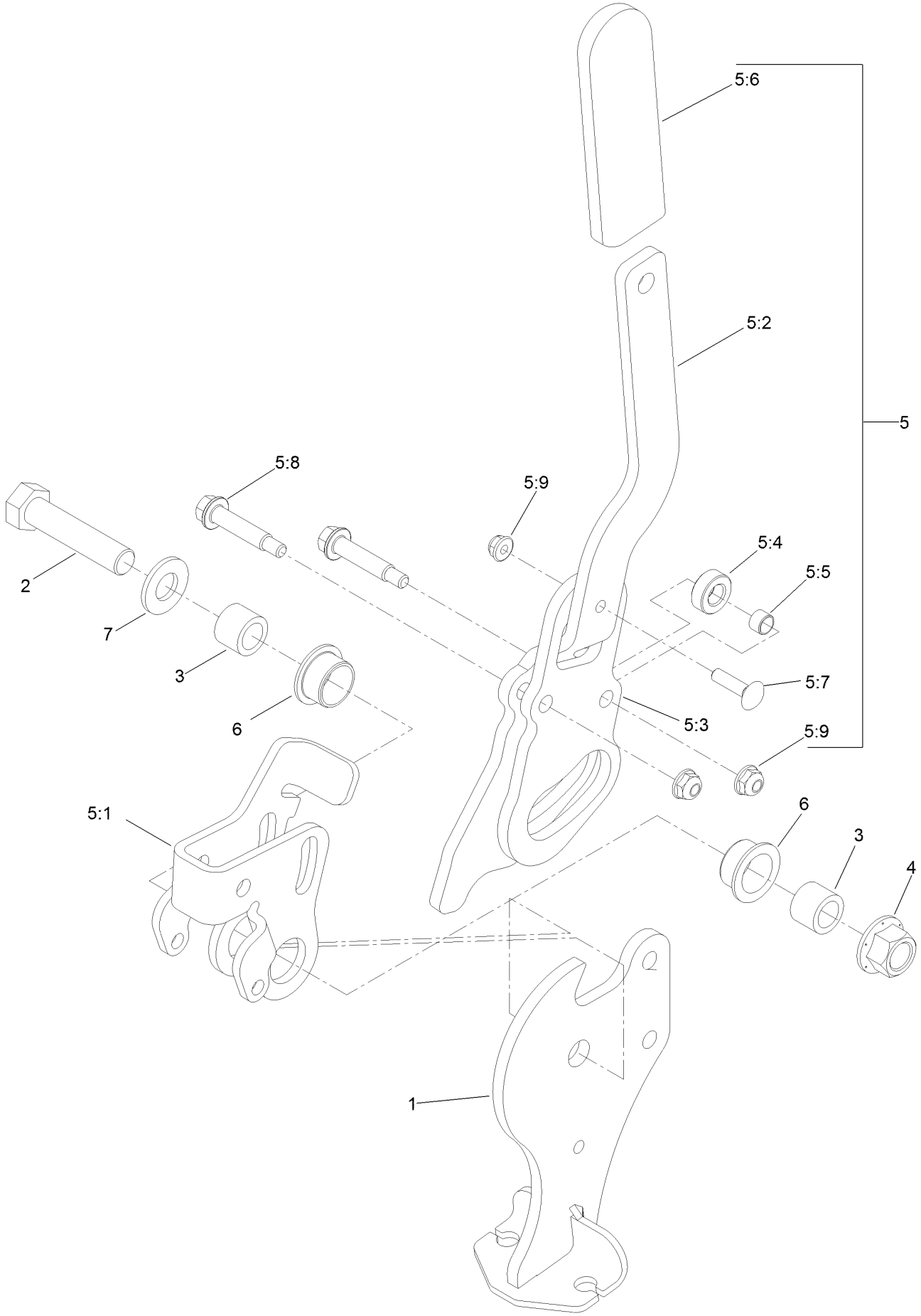

Parking Brake Handle Assembly No. 116-7551 (continued)

Ref.	Part Number	Qty.	Description
1	116-7263	1	Pivot-Brake
2	325-9	1	Screw-HH
3	116-5384	2	Spacer
4	99-5107	1	Nut-Lock
5	116-6860	1	Handle ASM
5:1	116-6856	1	Bellcrank-Brake
5:2	116-6857	1	Handle-Brake
5:3	116-6858	1	Plate-Handle
5:4	116-6846	1	Roller-Brake
5:5	116-6852	1	Bearing-Sleeve
5:6	1-633268	1	Grip-Lever
5:7	3229-2	1	Screw-CARR
5:8	116-6876	2	Screw-Shoulder
5:9	104-7201	3	Nut-HF
6	109-8054	2	Bushing-Flange
7	3256-26	1	Washer-Flat

Fuel Tank Mounting Assembly

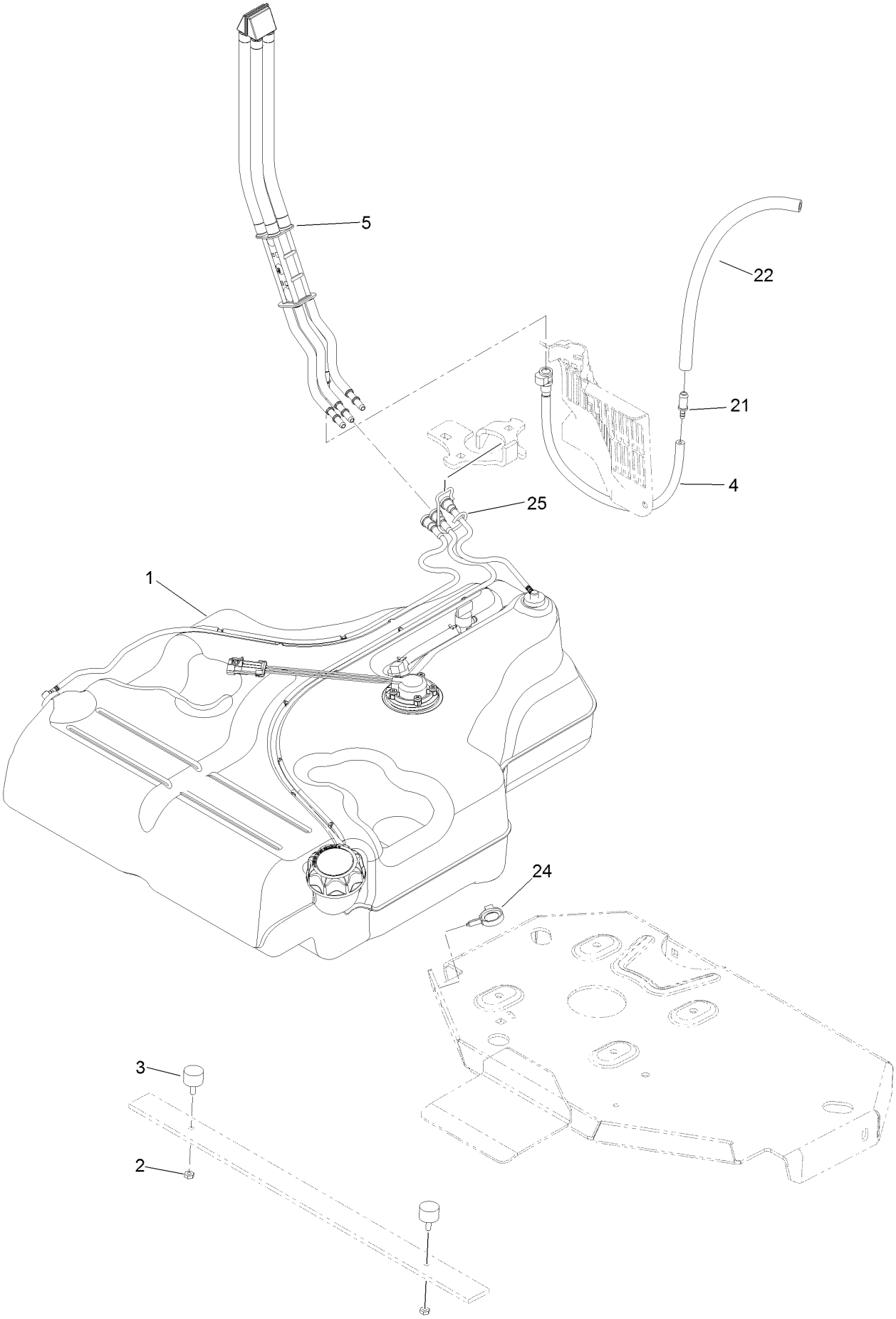

Fuel Tank Mounting Assembly (continued)

Ref.	Part Number	Qty.	Description
1	116-3979	1	Fuel Tank ASM
2	3218-1	2	Nut-Jam
3	116-6380	2	Bumper-Rubber (W/ Stud)
4	116-3977	1	Hose ASM
5	109-9491	1	Fuel Manifold Vent ASM

Ref.	Part Number	Qty.	Description
21	98-2952	1	Fitting-Straight
22	116-5087	1	Hose-Fuel
24	105-1853	1	Clamp-Hose
25	116-6005	1	Retainer-Vapor Line

Fuel Tank Assembly No. 116-3979

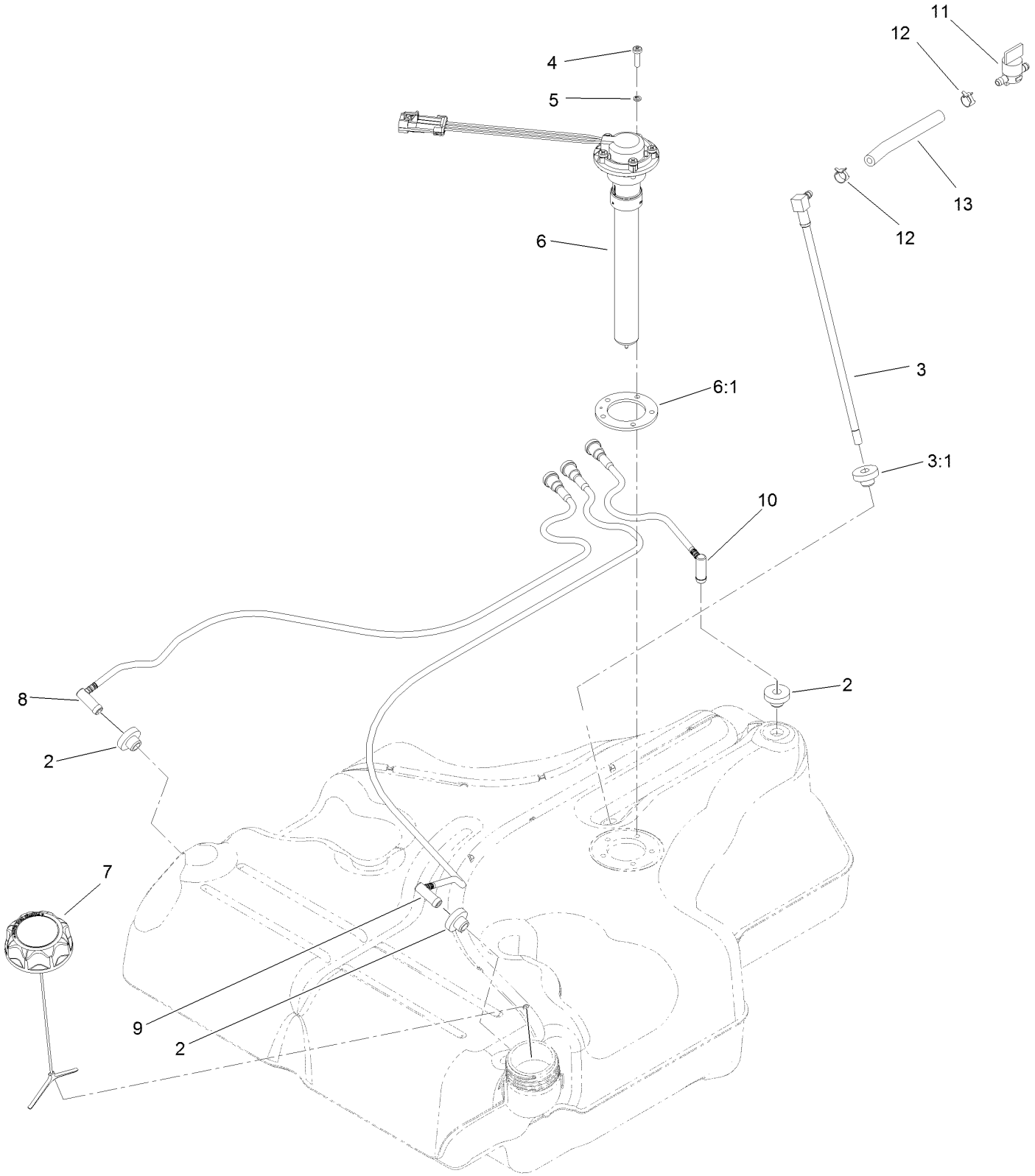

Fuel Tank Assembly No. 116-3979 (continued)

Ref.	Part Number	Qty.	Description
2	46-6560	4	Bushing
3	116-2459	1	Fuel Line Kit (With Grommet)
3:1	46-6560	1	Bushing
4	9107944	5	Screw-Pan
5	3253-17	5	Washer-Lock
6	116-0003	1	Sender-Fuel Level
6:1	109-9620	1	Gasket-Sender, Fuel
7	126-1789	1	Cap-Fuel, Ratcheting
8	116-2460	1	RH Vent Line Kit (With Grommet)
9	116-2461	1	LH Vent Line Kit (With Grommet)
10	116-2462	1	Rear Vent Line Kit (With Grommet)
11	1-603770	1	Valve-Fuel
12	2412-98	2	Clamp-Hose
13	109-0650	1	Hose-Fuel

Seat Mount Assembly

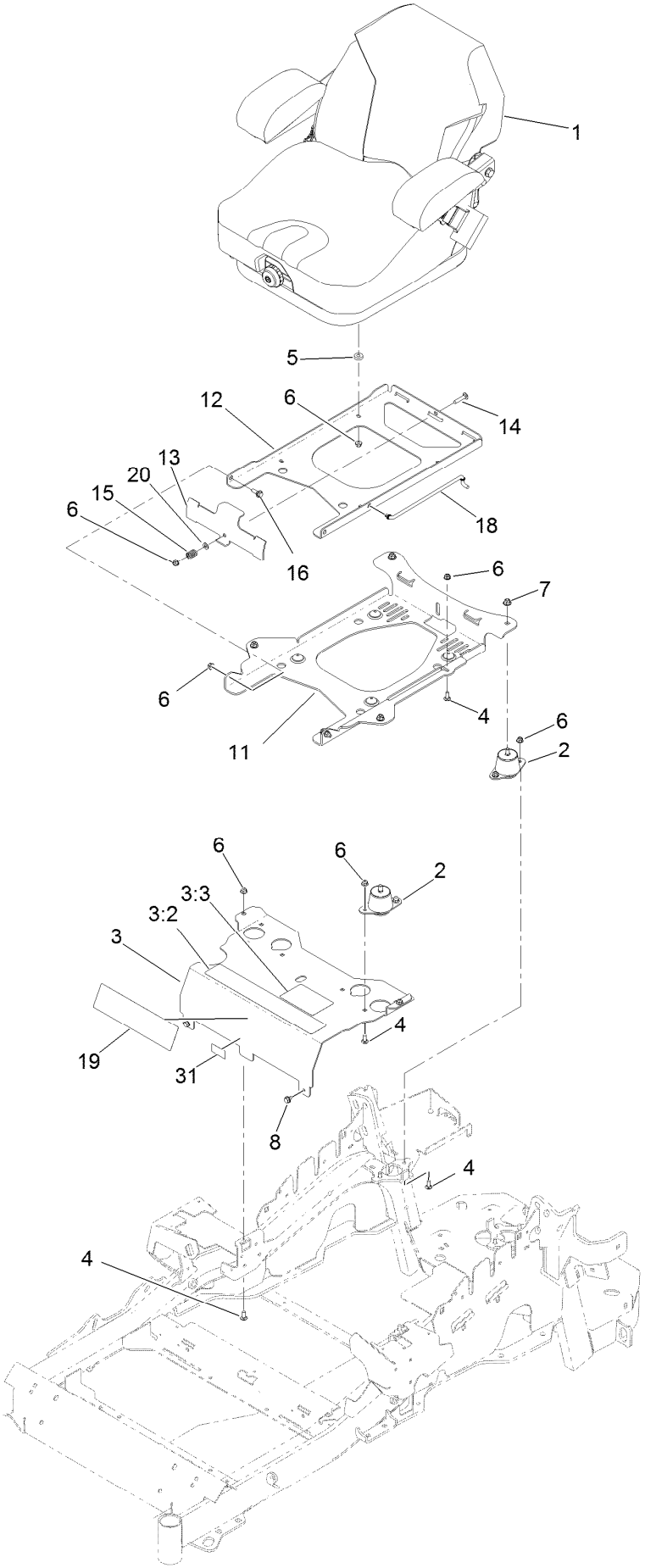

Seat Mount Assembly (continued)

Ref.	Part Number	Qty.	Description
1	125-3107	1	Suspension Seat ASM
2	109-9034	4	Isolator-Seat
3	125-9385	1	Seat Mount ASM
3:2	109-7069	1	Decal-Console
3:3	125-9382	1	Decal-Service Aid
4	3230-23	11	Screw-CARR
5	26-4840	4	Spacer-Pin, Mounting
6	104-8300	18	Nut-Flange, NI
7	104-8301	4	Nut-Flange, NI
8	9266934	2	Screw

Ref.	Part Number	Qty.	Description
11	116-3860-03	1	Plate-Tilt, Seat Support
12	116-3859-03	1	Plate-Seat, Frame
13	109-9881-03	1	Plate-Latch, Seat
14	3230-4	1	Screw-CARR
15	107-3017	1	Spring-Compression
16	116-1297	2	Screw-Shoulder
18	116-0070	1	Rod-Prop
19	120-5893	1	Decal
20	3256-23	1	Washer-Flat
31	121-7560	1	Decal-Efi

Seat Assembly No. 125-3107

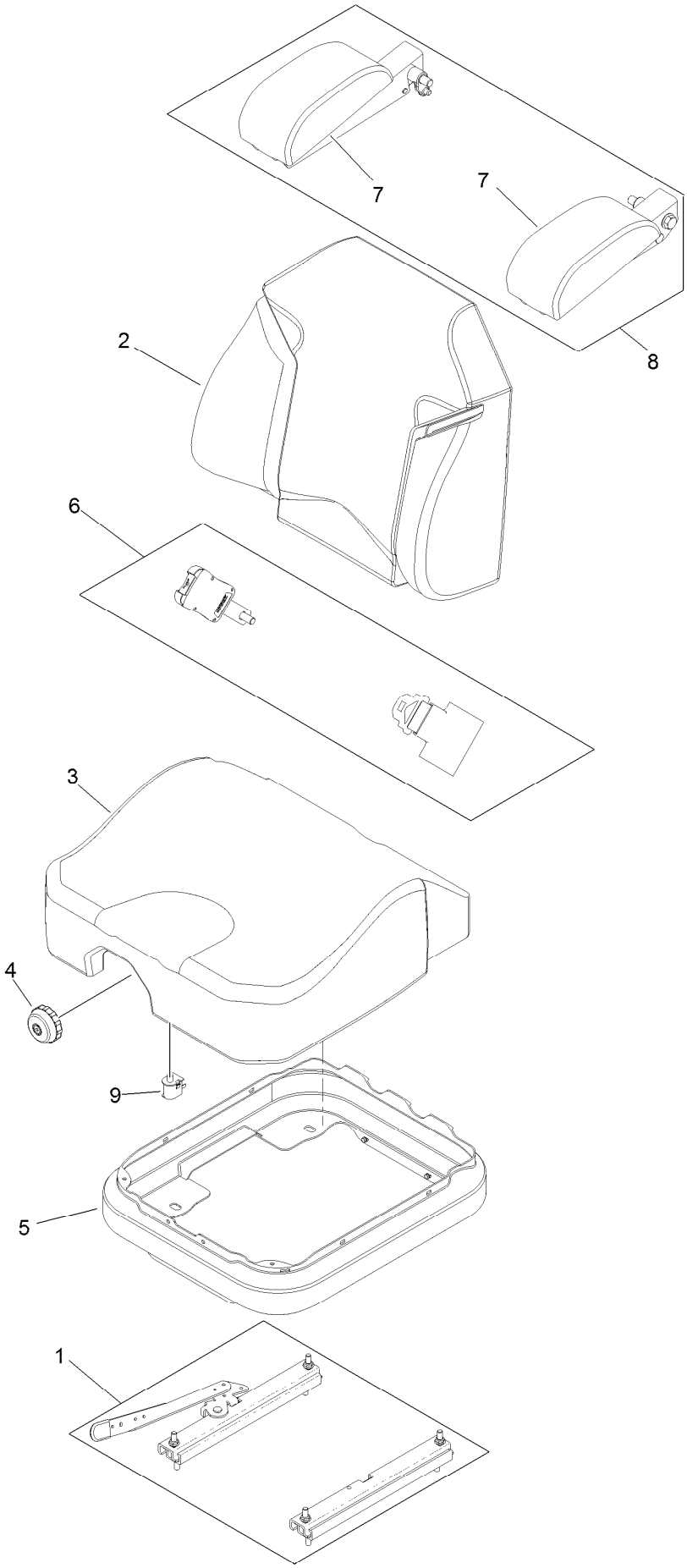

Seat Assembly No. 125-3107 (continued)

Ref.	Part Number	Qty.	Description
1	116-8910	1	Seat Track Set
2	125-3112	1	Cover-Back
3	125-3111	1	Cover-Cushion
4	116-8911	1	Knob-Adjuster
5	116-5659	1	Cover-Suspension Bellows
6	109-9805	1	Seat Belt Kit
7	109-9802	1	Arm Rest Pad Set
8	109-9803	1	Arm Rest Set
9	82-2190	1	Switch-Bail

Motion Control Assembly

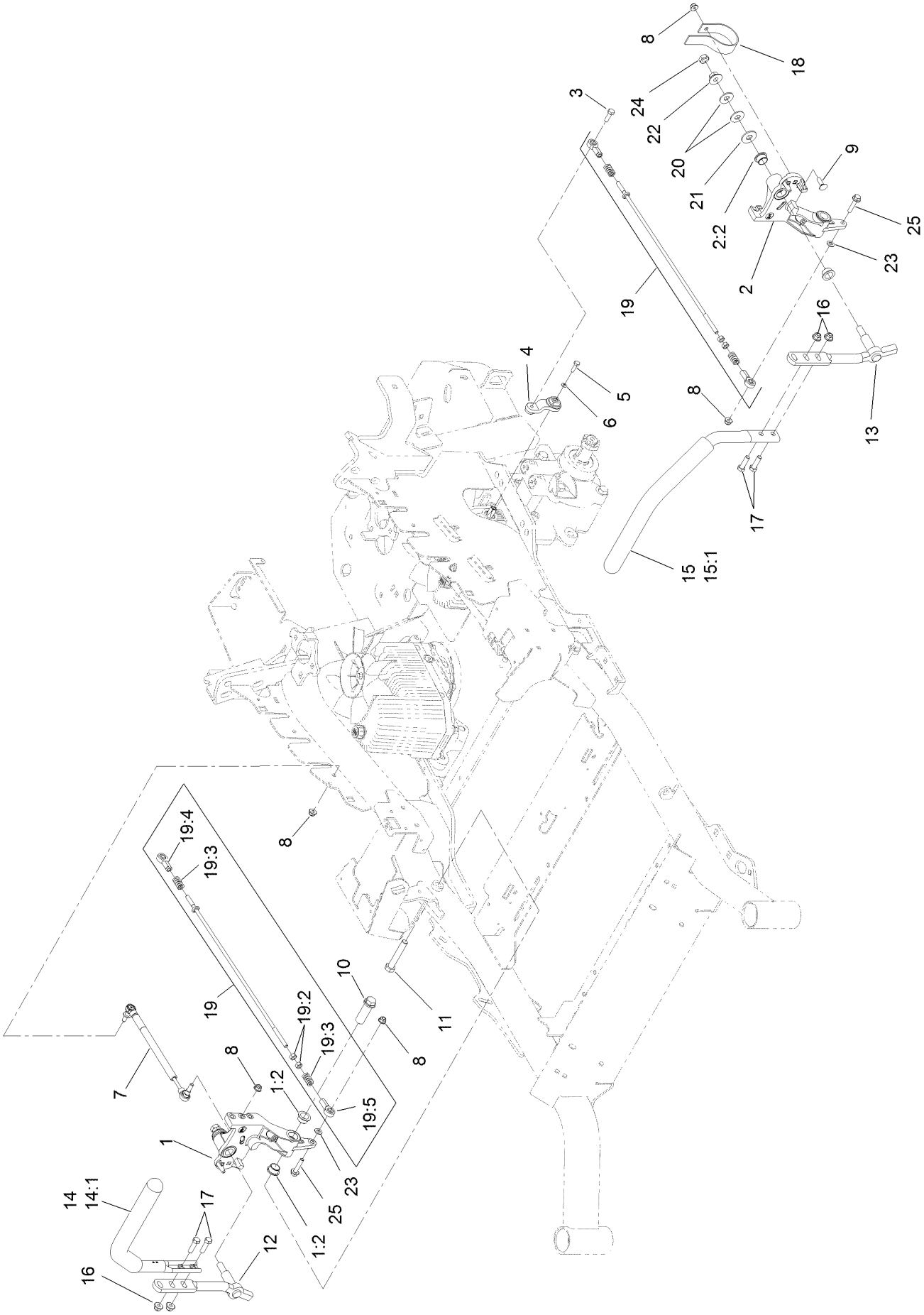

Motion Control Assembly (continued)

Ref.	Part Number	Qty.	Description
1	116-0880	1	RH Motion Control And Bushing ASM
1:2	109-8054	4	Bushing-Flange
2	116-0881	1	LH Motion Control And Bushing ASM
2:2	109-8054	4	Bushing-Flange
3	116-0648	2	Screw-HH, Thread Locking ●
4	109-4581	2	Arm-Control, Pump
5	9080046	2	Screw-HH ●
6	1-303435	2	Washer-Spring
7	116-0027	2	Damper-Control, Motion
8	104-8300	8	Nut-Flange, NI
9	3230-2	2	Bolt-CARR
10	109-5891	2	Hub-Threaded
11	325-12	2	Screw-HH
12	116-0039	1	Lever-Control Motion, RH
13	116-0040	1	Lever-Control Motion, LH

Ref.	Part Number	Qty.	Description
14	109-6589	1	RH Steering Handle ASM
14:1	109-5668	1	Grip-Control, Lever
15	109-6590	1	LH Steering Handle ASM
15:1	109-5668	1	Grip-Control, Lever
16	104-8301	4	Nut-Flange, NI
17	323-7	4	Screw-HH
18	109-5575	2	Spring-Leaf
19	109-8106	2	Front Pump Linkage ASM
19:2	3219-2	2	Nut-Hex
19:3	1-323245	2	Spring-Compression
19:4	1-633152	1	Balljoint-LH
19:5	1-543017	1	Balljoint-RH
20	109-9505	4	Washer-Spring
21	3256-6	2	Washer-Flat
22	32128-56	2	Nut-HF
23	3256-23	2	Washer-Flat
24	3218-5	2	Nut-Jam
25	115-1794	2	Screw-HHF

● Use Pro-Lock, Nut Type (P/N 1-840022, .5ml tube) on threads.

Fender, Console and Control Assembly

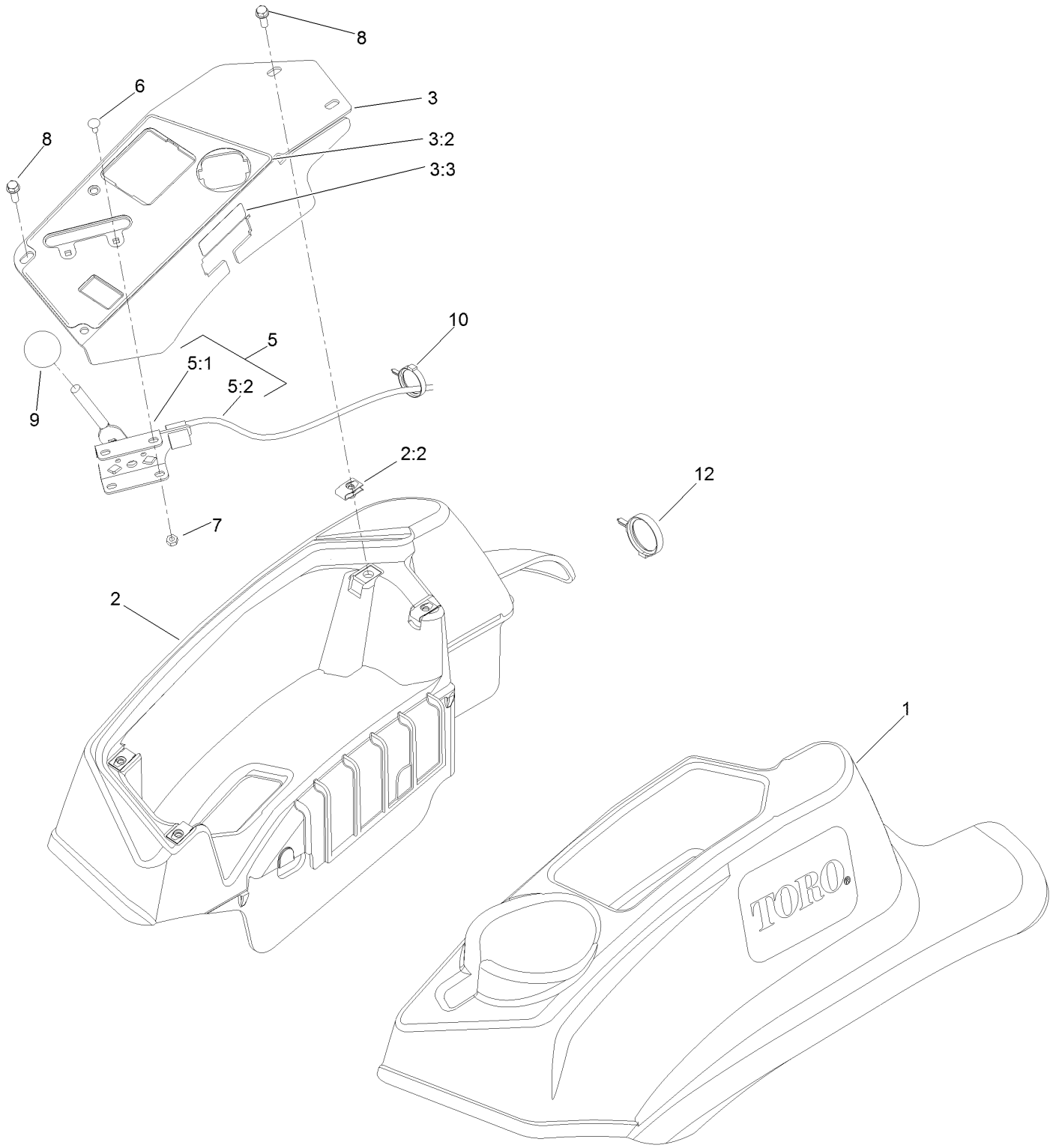

Fender, Console and Control Assembly (continued)

Ref.	Part Number	Qty.	Description
1	119-2602	1	LH Console ASM
2	119-2603	1	RH Console ASM
2:2	107069	4	Clip
3	121-7587	1	Control Panel W/Decal ASM
3:2	121-7586	1	Decal-Control Panel
3:3	114-4466	1	Decal-Fuses
5	115-2752	1	Throttle Control ASM
5:1	112-2334	1	Lever-Throttle
5:2	115-3868	1	Cable-Throttle
6	1-807513	2	Bolt-CARR
7	3296-2	2	Nut-Lock, NI
8	32105-15	4	Screw-HWH
9	1-603175	1	Knob-Ball
10	105-1853	1	Clamp-Hose
12	117-7817	1	Clamp-Harness

Electrical System Assembly

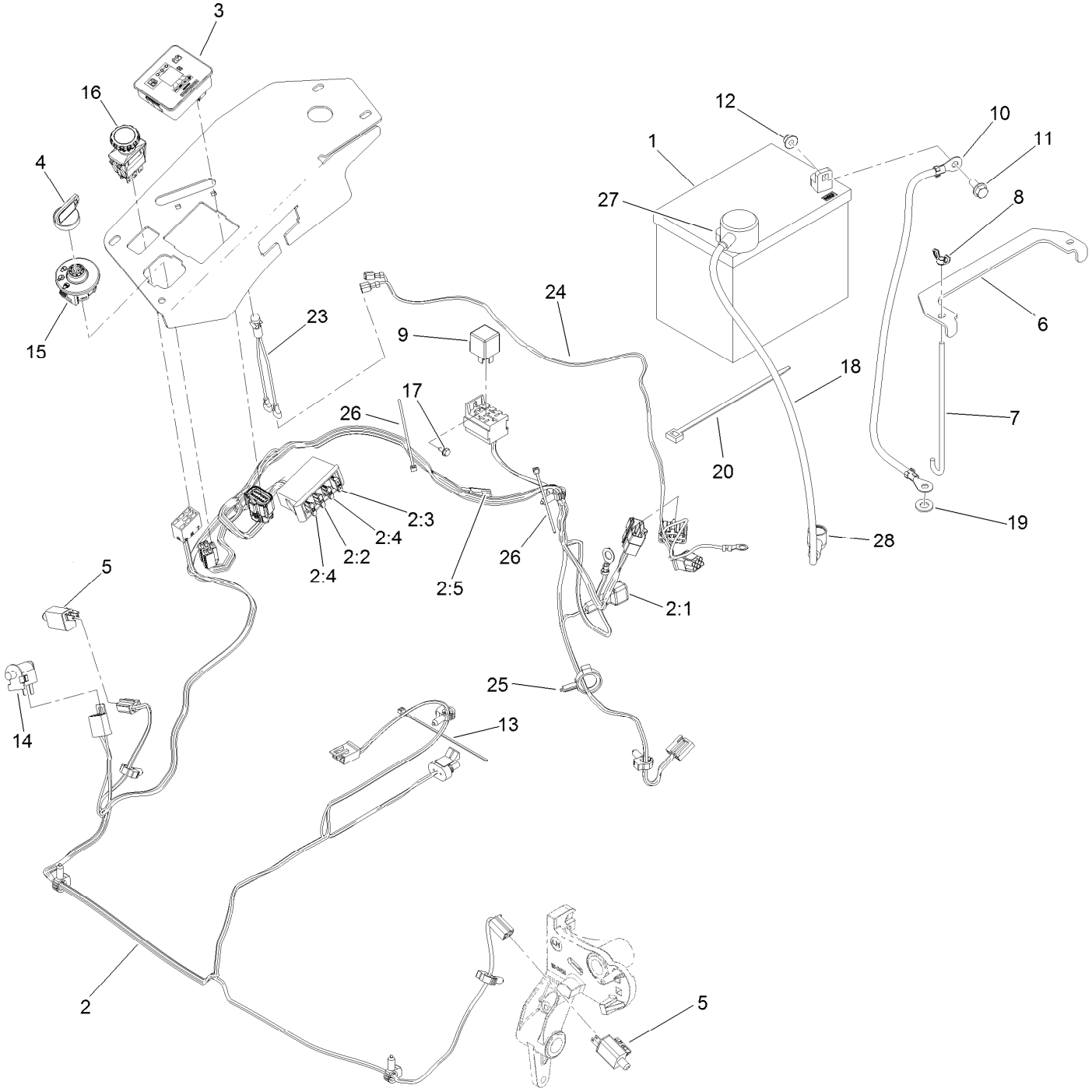

Electrical System Assembly (continued)

Ref.	Part Number	Qty.	Description
1	104-8162	1	Battery-Dry
2	116-6009	1	Harness-Wire, Main ●
2:1	103-3895	1	Diode-Tvs
2:2	218-578	1	Fuse-Blade, 10 Amp
2:3	109355	1	Fuse-Blade, 15 Amp
2:4	109102	2	Fuse-Blade, 25 Amp
2:5	116-0053	1	Cap-Plug
3	117-3882	1	Fuel/Hour Meter ASM
4	63-8360	1	Key-Ignition (W/Shield)
5	110-6765	2	Switch-Single Pole No
6	116-0042-03	1	Strap-Tie Down, Battery
7	1-633651	2	Bolt-Holddown
8	1-543792	2	Wingnut
9	1-643275	1	Relay
10	114-1218	1	Cable-Battery, Negative
11	3234-5	2	Screw-HHF
12	104-8300	2	Nut-Flange, NI
13	1-303287	3	Tie-Cable
14	82-2190	1	Switch-Bail
15	117-2221	1	Switch-Ignition
16	116-0124	1	Switch-PTO, 10A
17	104-2065	1	Screw-HWH
18	115-3864	1	Cable-Battery, Positive
19	3256-24	1	Washer-Flat
20	1-303335	1	Tie-Plastic
23	1-643267	1	Indicator-Led, Red
24	116-3062	1	Harness-Indicator Light
25	105-1853	1	Clamp-Hose
26	1-303287	2	Tie-Cable
27	109-2407	1	Insulator-Battery
28	1-543393	1	Insulator-Solenoid

● Use dielectric grease on all unsealed connectors and terminals only. Do not apply in sealed connectors.

Decklift Assembly

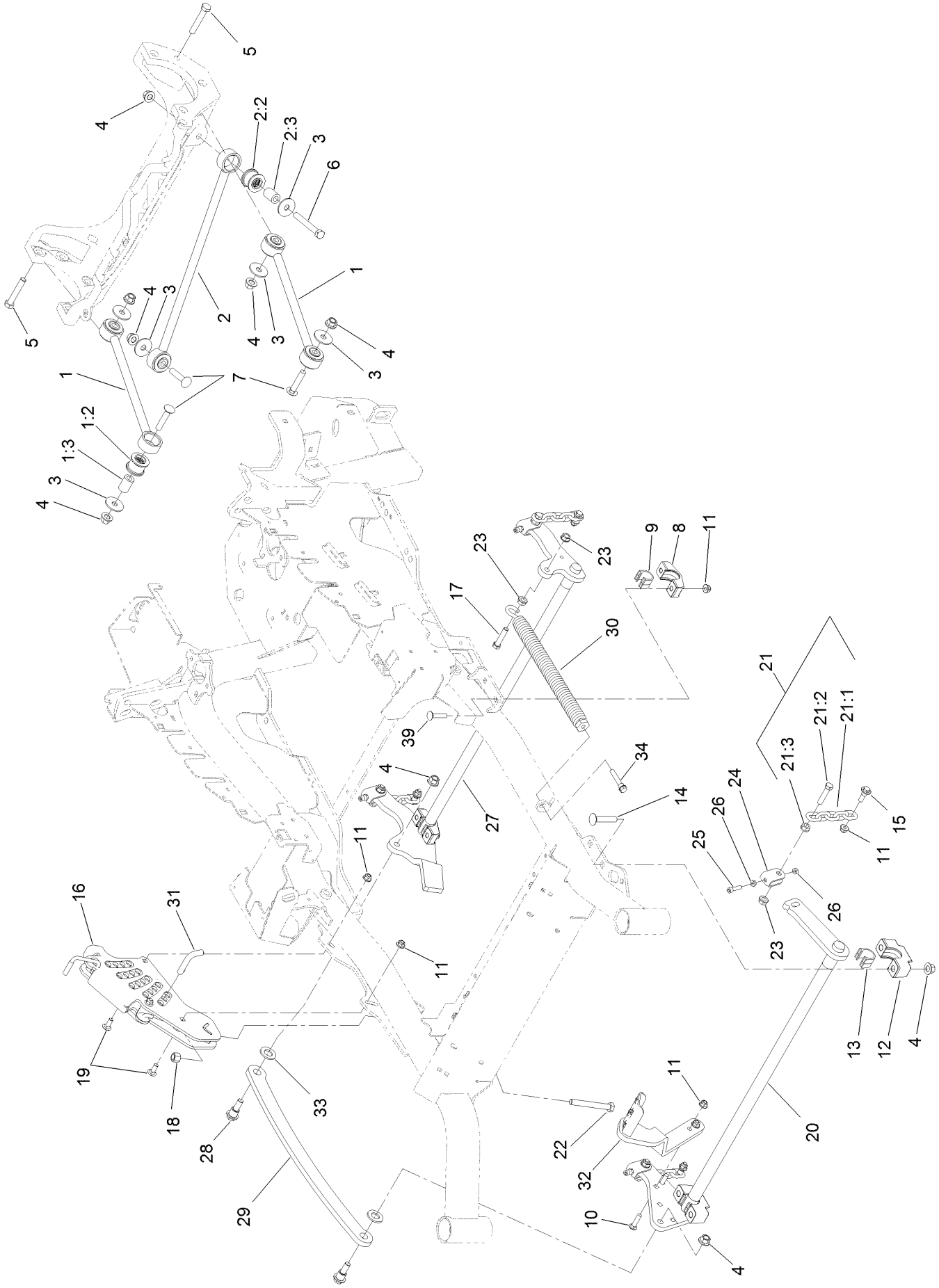

Decklift Assembly (continued)

Ref.	Part Number	Qty.	Description
1	109-7952	2	Deck Strut ASM
1:2	109-5009	2	Bushing-Suspension, Rubber
1:3	109-5010	2	Spacer
2	109-5013	1	Panhard Rod ASM
2:2	109-5009	2	Bushing-Suspension, Rubber
2:3	109-5010	2	Spacer
3	86-1990	6	Washer-Thrust
4	99-5107	12	Nut-Lock
5	325-12	2	Screw-HH
6	325-17	1	Screw-HH
7	3233-34	3	Screw-CARR
8	116-0818-03	2	Support-Cross Shaft, Rear Bearing
9	109-7173	2	Bearing-Cross Shaft, Rear
10	3231-4	2	Screw-CARR
11	104-8301	12	Nut-Flange, NI
12	109-9409	2	Support-Cross Shaft, Front Bearing
13	109-9410	2	Bearing-Cross Shaft, Front
14	116-1700	4	Bolt-CARR
15	109-9840	4	Screw-Shoulder, HHF
16	109-7438	1	HOC ASM
17	109-9065	1	Screw-HH
18	3296-23	1	Nut-Lock, NI
19	3231-2	2	Bolt-CARR
20	116-2217-03	1	Cross Shaft-Front
21	116-0756	4	Deck Lift Chain ASM
21:1	1-633447	1	Chain-Lift, Deck
21:2	109-9065	1	Screw-HH
21:3	32128-37	1	Nut-HF
22	116-0559	1	Bolt-TAP
23	32128-37	6	Nut-HF
24	109-9066	4	Yoke-Adjust, Deck
25	322-47	4	Screw-HH
26	3218-2	8	Nut-Jam
27	116-0459-03	1	Lift-Deck, Rear
28	116-0780	2	Screw-HHF, Shoulder
29	116-0797-03	1	Link-Lift, Deck
30	116-0000	1	Extension Spring ASM
31	116-5584	1	Pin-HOC
32	116-1919-01	1	Lever-Foot
33	3256-28	2	Washer-Flat
34	92-7674	1	Bolt-Shoulder
39	3231-5	4	Screw-CARR

Height-of-Cut Assembly No. 109-7438

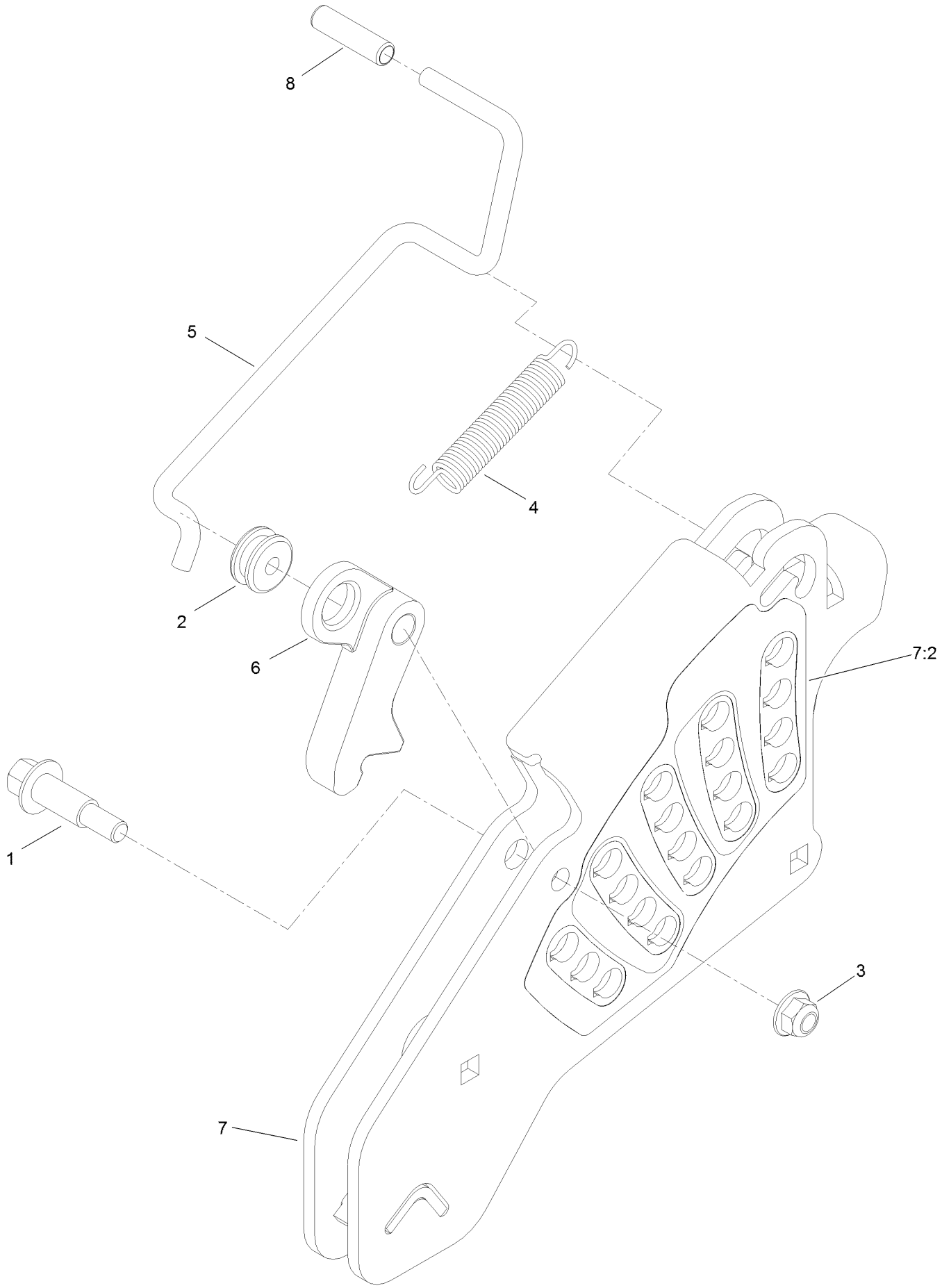

Height-of-Cut Assembly No. 109-7438 (continued)

Ref.	Part Number	Qty.	Description
1	62-1330	1	Bolt-Shoulder
2	109-7130	1	Grommet
3	104-8301	1	Nut-Flange, NI
4	109-7124	1	Spring-Extension
5	109-7128	1	Rod-Lock, Transport
6	116-0118	1	Pawl-Transport, HOC
7	109-7335	1	HOC Plate ASM
7:2	116-0752	1	Decal-HOC
8	109-8250	1	Grip-Lever

Engine, Clutch and Muffler Assembly

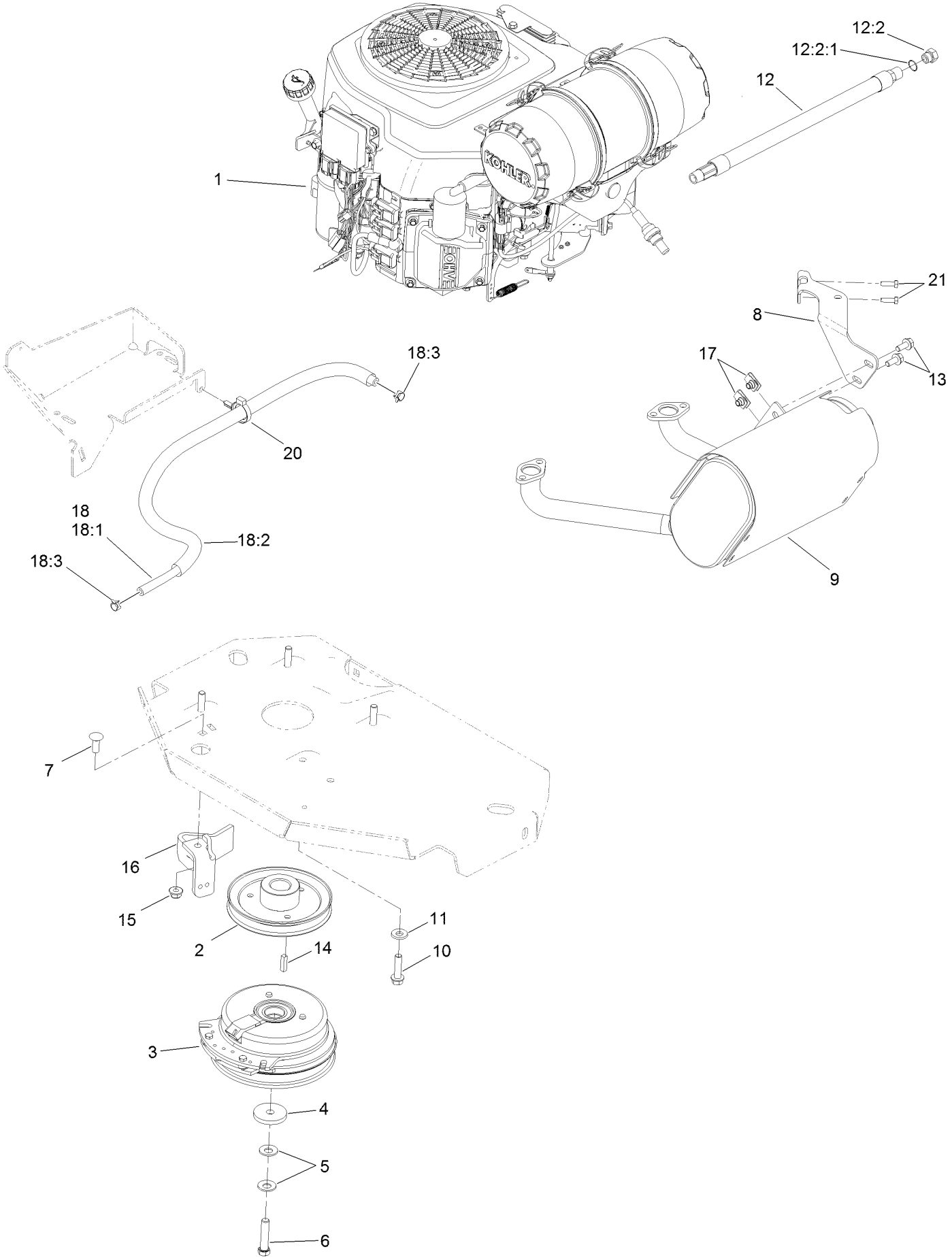

Engine, Clutch and Muffler Assembly (continued)

Ref.	Part Number	Qty.	Description
1		1	Engine-Kohler, Ps-Ecv740-3012 ●■
2	109-9905	1	Sheave
3	116-1620	1	Clutch Kit
4	109-6919	1	Washer-Clutch
5	1-603610	2	Washer-Spring
6	109-9762	1	Screw-HH W/Loctite ▲
7	3231-22	1	Screw-CARR
8	116-4297	1	Muffler Bracket Kit
9	116-2038	1	Muffler
10	32144-102	4	Screw-HWH
11	98-5975	4	Washer-Belleville
12	116-5316	1	Oil Drain Hose ASM

Ref.	Part Number	Qty.	Description
12:2	353-508	1	Plug-HH
12:2:1	237-42	1	O-Ring
13	3234-5	2	Screw-HHF
14	1-807259	1	Key
15	104-8301	1	Nut-Flange, NI
16	116-2612-01	1	Clutch-Anchor
17	94-2413	2	U-Nut
18	117-3893	1	Fuel Line ASM
18:1	109-0273	1	Hose-Fuel
18:2	117-3892	1	Sleeve-Thermal
18:3	2412-98	2	Clamp-Hose
20	104-2490	1	Clamp-Hose
21	116-4295	2	Screw-HH

● Not serviced separately

▲ Use Pro-Lock, Nut Type (P/N 1-840022, .5ml tube) on threads.

■ Obtain parts from www.kohlerplus.com

Deck Assembly

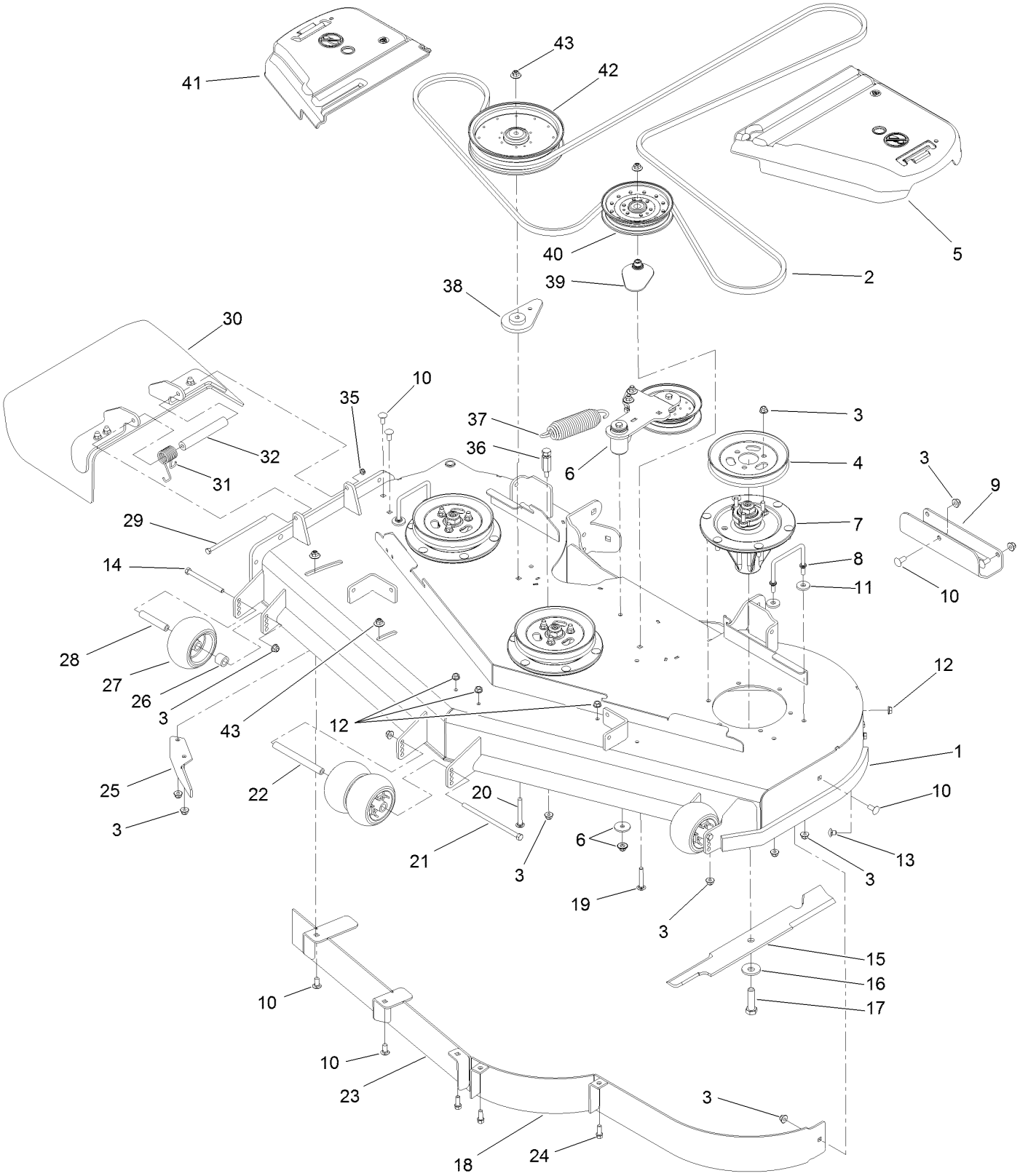

Deck Assembly (continued)

Ref.	Part Number	Qty.	Description
1	114-5815	1	Deck Decal ASM
2	114-5858	1	Belt-V
3	104-8301	42	Nut-Flange, NI
4	105-7734	3	Pulley
5	109-6938	1	Cover-Belt, LH
6		1	Idler Arm ASM ●
7	119-8560	3	Spindle ASM
8	109-6982	2	Wireform-Cover
9	121-8031-01	1	Plate-Skid
10	3231-27	9	Screw-CARR
11	1-373034	4	Washer
12	3290-357	6	Nut-HHF, Whiz
13	108-5387	3	Screw-CARR
14	323-23	2	Screw-HH
15	105-7718-03	3	Blade-Hi Flow
16	103-0865	3	Washer-Blade Bolt, Heavy
17	51-4060	3	Screw-Blade
18	114-5842-01	1	Baffle
19	3231-40	1	Bolt-CARR, Short Neck
20	3231-42	1	Screw-CARR
21	108-5388	1	Screw-HH

Ref.	Part Number	Qty.	Description
22	98-5967	1	Spacer-Wheel
23	115-7465-01	1	Baffle
24	92-1624	3	Screw-HWH
25	106-3216-01	1	Baffle-Discharge
26	98-7913	2	Tube-Spacer
27	1-603299	4	Roller-Scalp, Anti
28	98-7912	2	Tube-Spanner
29	322-50	1	Screw-HH
30	108-2792	1	Rubber Deflector ASM
31	108-4052	1	Spring-Torsion
32	105-4622	1	Spacer
35	3296-47	1	Nut-Lock, NI
36	114-5867	1	Anchor-Spring, Tall
37	116-6317	1	Spring-Extension
38	109-9416	1	Spacer-Idler
39	109-2872	1	Spacer-Pulley
40	116-4670	1	Pulley-Idler, Flat
41	116-0094	1	Cover-Belt, RH
42	109-8590	1	Pulley-Idler
43	109-6658	4	Nut-Flange, NI

● Not serviced separately

Deck Decal Assembly No. 114-5815

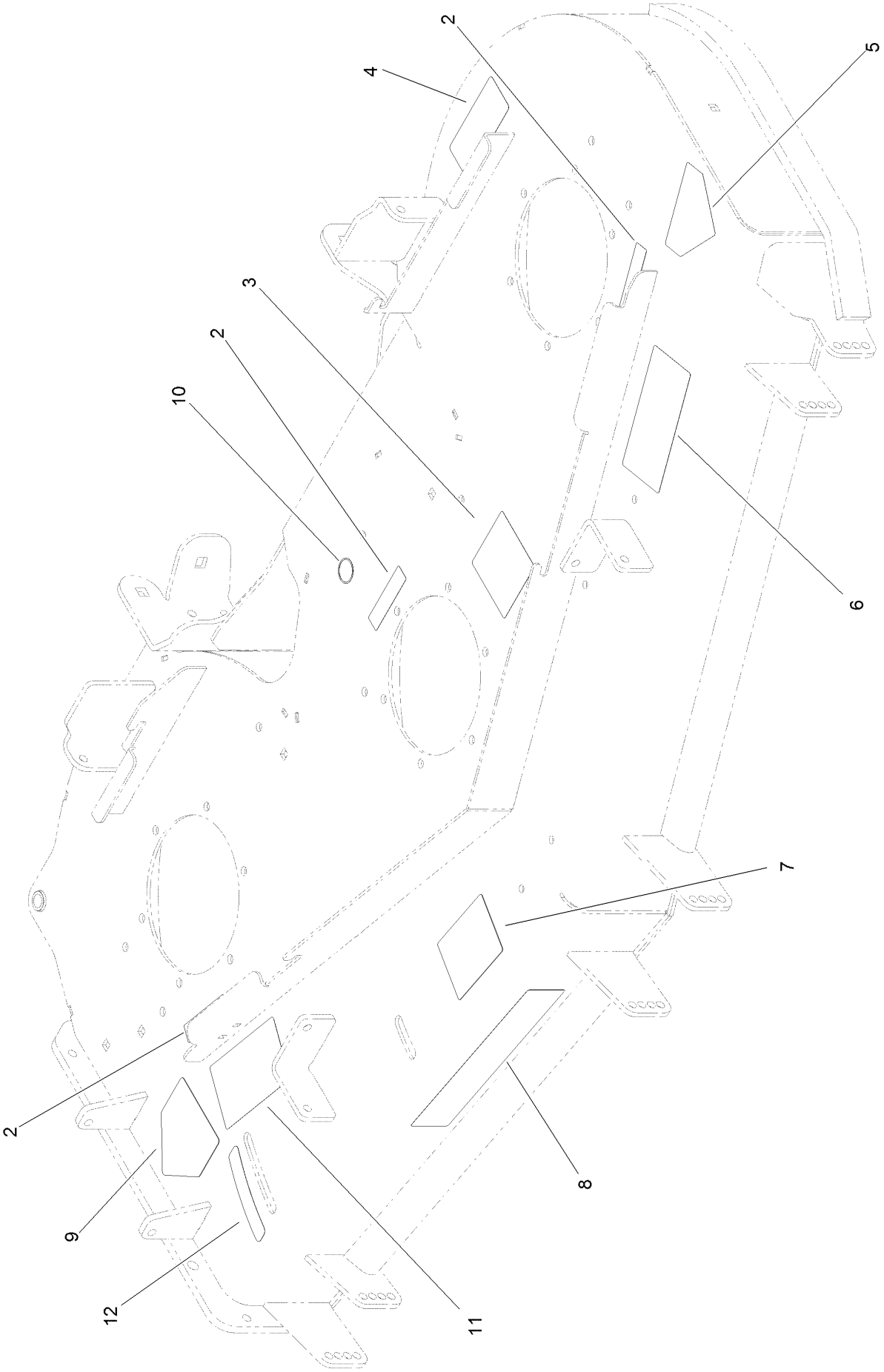

Deck Decal Assembly No. 114-5815 (continued)

Ref.	Part Number	Qty.	Description
2	98-5954	3	Decal-Cover, Missing
3	115-7445	1	Decal-Routing, Deck Belt
4	68-8340	1	Decal-Torque
5	1-403005	1	Decal-Danger
6	66-1340	1	Decal-Danger, Thrown Object
7	105-7798	1	Decal-Scalp, Anti
8	107-1619	1	Decal
9	54-9220	1	Decal-Danger
10	58-6520	1	Decal-Grease
11	110-2068	1	Decal-Adjustment, Baffle
12	110-2067	1	Decal-Setting, Baffle

Idler Assembly

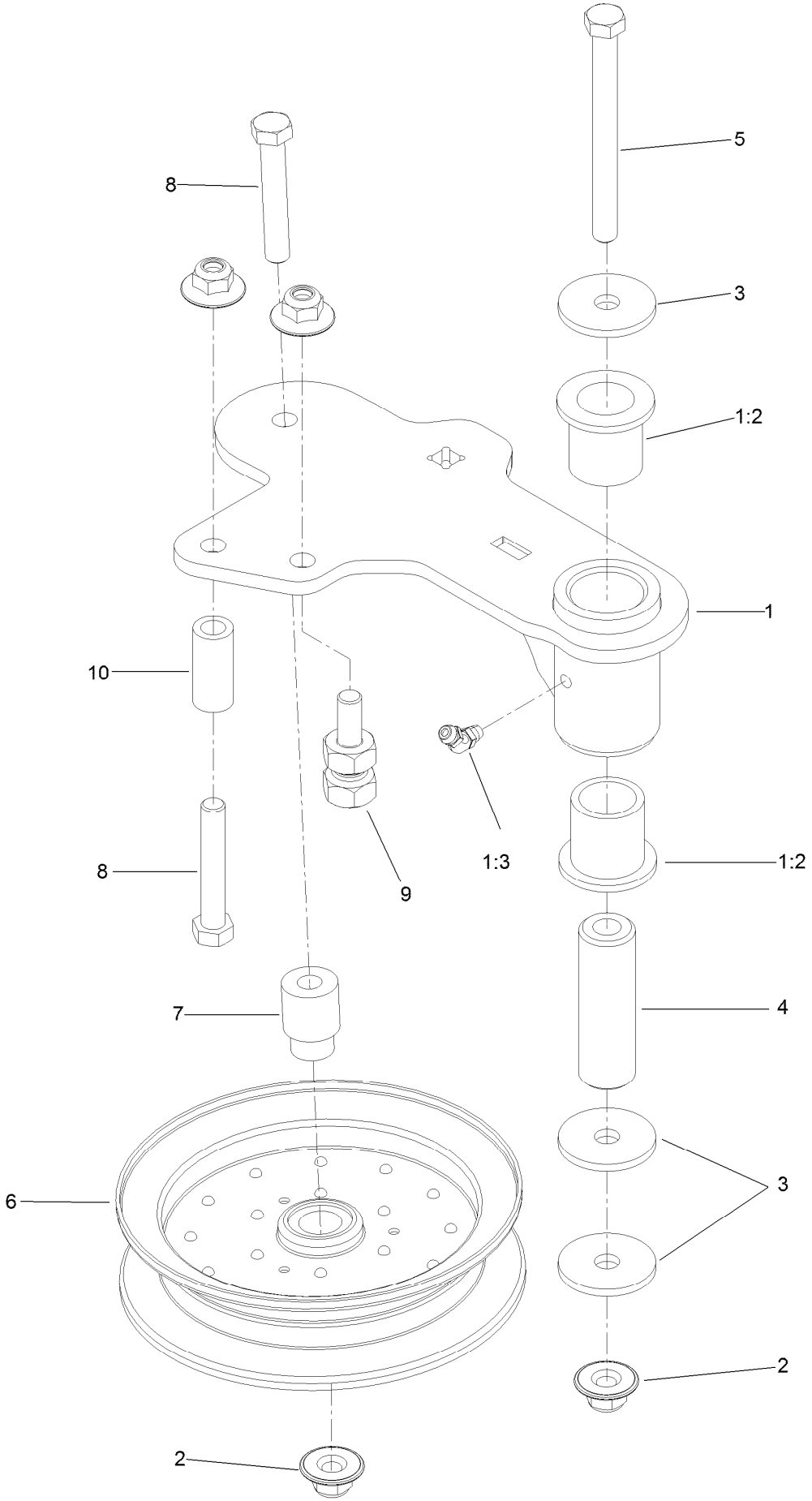

Idler Assembly (continued)

Ref.	Part Number	Qty.	Description
1	114-5870	1	Idler Arm ASM
1:2	1-303514	2	Bearing-Flanged
1:3	1481	1	Fitting-Grease
2	109-6658	4	Nut-Flange, NI
3	1-213069	3	Washer
4	114-5848	1	Spacer-Plain
5	98-5961	1	Screw-HH
6	116-4668	1	Idler-Pulley, Flanged
7	112-4212	1	Mount-Pulley
8	323-11	2	Screw-HH
9	114-5866	1	Anchor-Spring, Short
10	104-0151	1	Spacer

Spindle Assembly No. 119-8560

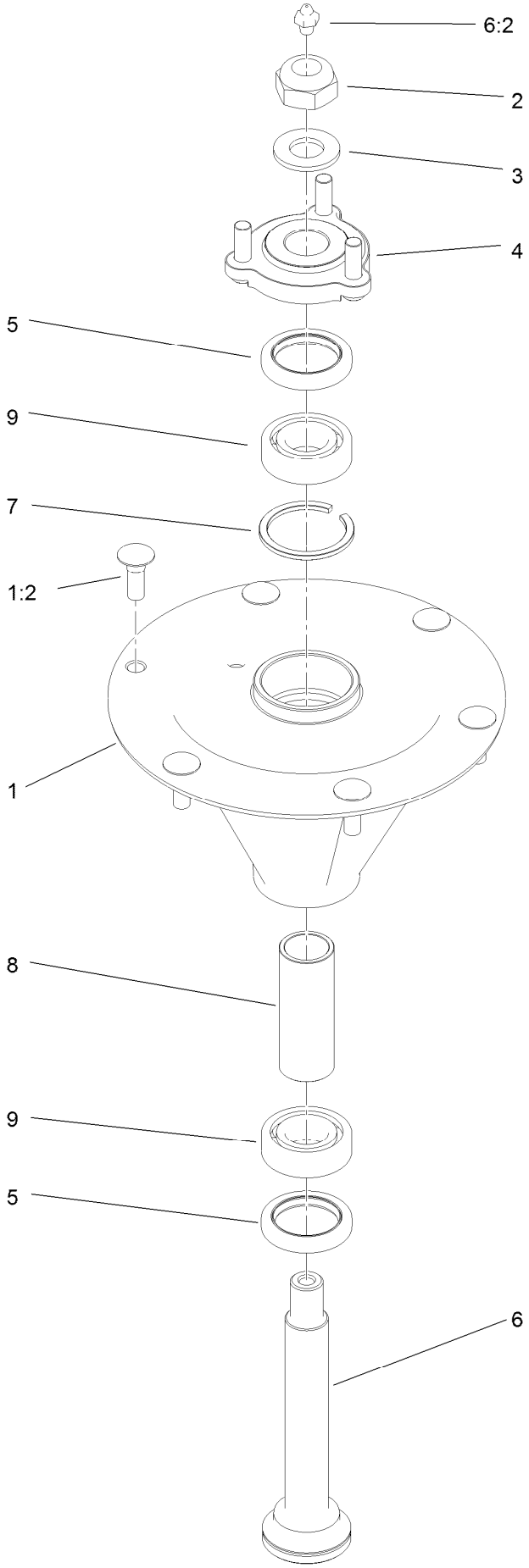

Spindle Assembly No. 119-8560 (continued)

Ref.	Part Number	Qty.	Description
1		1	Spindle Housing And Studs ASM ●
1:2	114-8195	6	Bolt-Ribbed Neck
2	3296-67	1	Nut-Lock, NI
3	92-5836	1	Washer
4	117-6172	1	Spindle Hub ASM
5	253-133	2	Seal-Oil
6	119-8527	1	Shaft-Spindle
6:2	302-2	1	Fitting-Grease
7	119-8532	1	Snap Ring
8	117-6184	1	Spacer
9	119-8558	2	Bearing-Noseal

● Not serviced separately

Rubber Deflector Assembly No. 108-2792

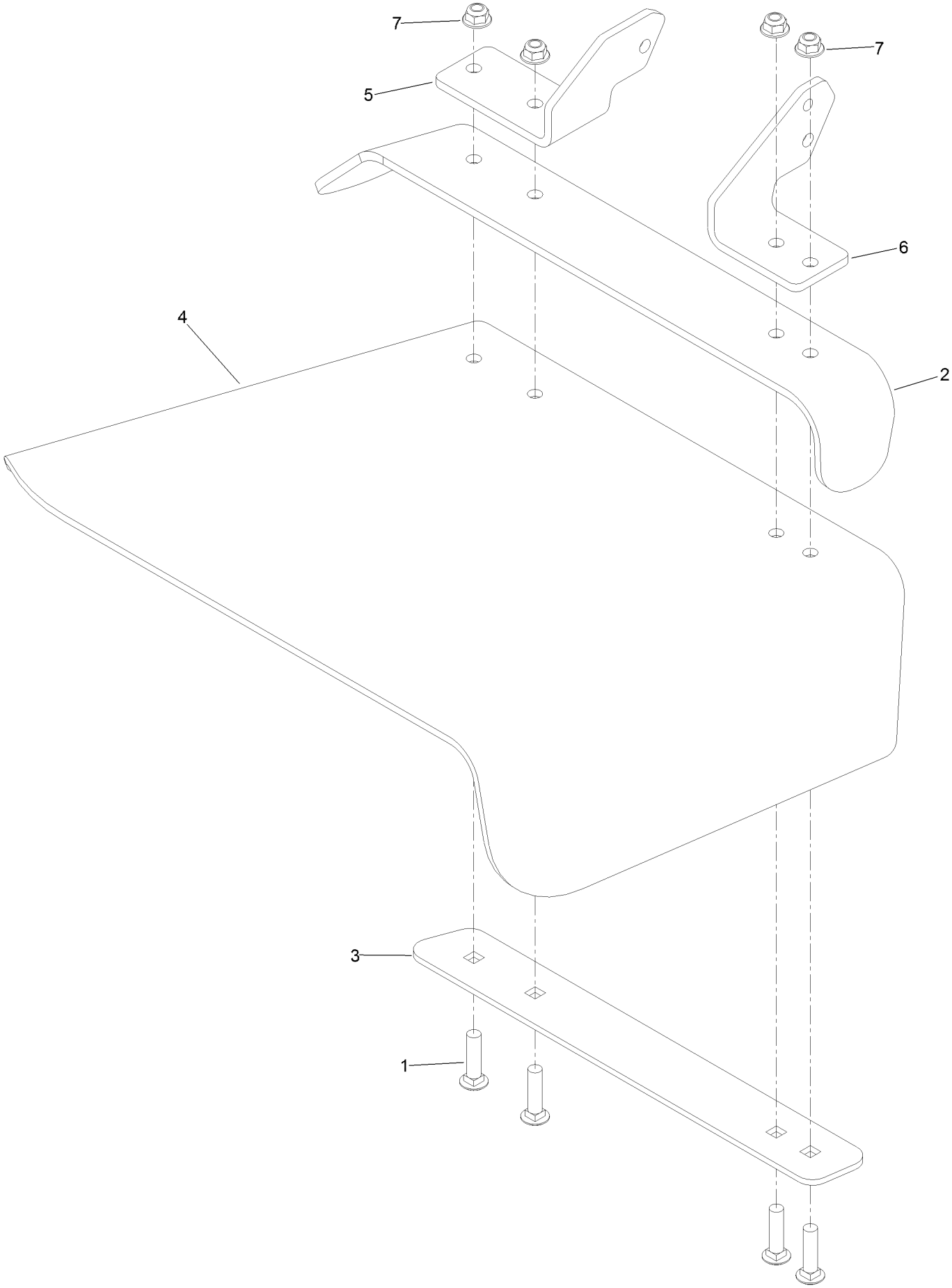

Rubber Deflector Assembly No. 108-2792 (continued)

Ref.	Part Number	Qty.	Description
1	3231-4	4	Screw-CARR
2	106-3246-01	1	Deflector
3	106-3248-03	1	Strap-Discharge
4	108-5029	1	Deflector-Rubber
5	108-4059-01	1	Plate-Hinge, Rear
6	106-3253-01	1	Plate-Hinge, Front
7	104-8301	4	Nut-Flange, NI

Attachments and Accessories

For 74930 Z Master Professional 5000 Series Riding Mower with 60in TURBO FORCE Side Discharge Mower

Product Name	Model/Part
Blade-Mid Flow, 20.5in	105-7715-03
Blade-Lo Flow, 20.5in	105-7716-03
Blade-Hi Flow, 20.5in	105-7718-03
Blade-Recycler, 20.5in	105-7777-03
Blade-Atomic, 20.5in	105-8777-03
Turbo Baffle Kit	107-1634
6 Pack Blade, 20.5in Hi-Flow	108-1114
6 Pack-Blade, 20.5in Atomic	108-1115
6 Pack Blade, 20.5in Mid-Flow	108-1123
6 Pack-Blade, 20.5in Lo Flow	108-1128
Anti-Scalp Kit (Trim Side)	108-4140
Hitch Kit	109-9487
6 Pack-Blade, 20.5in Recycler	110-0405
Hypr-Oil 500 (quart)	114-4713
Hypr-Oil 500 (gallon)	114-4714
Hypr-Oil 500-5 (5 gallon)	114-4715
Bimini Folding Shade Assembly	115-4510
Recycler Kit	115-7468
Roller Striper Kit	115-7470
Light Kit	116-1154
Operator-Controlled Discharge Chute Kit	117-3600
Deluxe Suspension Seat Kit	117-6174
Z Stand Kit	121-4811
Deluxe Seat Kit	121-7595
Seat Tilt Frame And Iso Mount Kit	121-7596
MVP Belt and Blade Kit	127-1639
Toro Deluxe Rider Cover	490-7319
Spark Arrestor Screen	75-6880
Blower and Drive Kit	78553
E-Z Vac Triple Bagging System	78563
E-Z Vac DFS Collection System	78567
Filter Minder Gauge	99-4664
Trash Holder Kit	TC26

Notes:

Notes:

Notes:

TORO®

Count on it.