Form No. 3380-859 Rev A

TORO®

Count on it.

Parts Catalog

Z Master® Professional 6000 Series Riding Mower

with 152cm TURBO FORCE® Rear Discharge Mower

Model No. 74942TE—Serial No. 314000001 and Up

Register at www.Toro.com.
Original Instructions (EN)

CE

3380-859 A

Ordering Replacement Parts

To order replacement parts, please supply the part number, the quantity, and the description of each part desired.

Understanding Reference Numbers

Each identified part in an illustration has a reference number. The reference number for a part also appears in the parts list, along with other information about the part.

This catalog uses two special reference number formats, one to indicate parts in a service assembly and another to indicate the quantity of a given part in an illustration.

Service Assembly Reference Numbers

Parts in service assemblies have reference numbers in the form a:b. The a represents the reference number of the entire service assembly and the b represents a sequential number unique to each part within the service assembly.

For example, a wheel assembly might be identified by reference number 6, the tire by 6:1, the valve by 6:2, and the wheel by 6:3. When you order the assembly identified by reference number 6, you receive all parts identified by reference numbers 6:1,6:2, and 6:3. However, you may also order any part individually. Reference numbers of this type appear in illustration and in parts lists.

Reference Numbers Indicating Quantity

In an illustration, if a reference number indicates more than one part, the reference number has the form nX y. The n represents the quantity of the part, the X is the multiplication symbol, and the y represents the reference number.

For example, in an illustration, the reference number 2X 37 means that two of the parts identified by reference number 37 are indicated.

List of Abbreviations

AR: as required

ASM: assembly

BBC: blade brake control

BHTF: button head thread forming

CARR: carriage

CCW: counter clockwise

CW: clockwise

DEG: degrees

DPA: Dual Point Adjustment

ECM: electronic control module

EXT: external

FH: flat head

GA: gauge

HD: heavy-duty

HF: hex flange

HH: hex head

HHF: hex head flange

HHFTF: hex head flange thread forming

HJ: hex jam

HLH: hex lag head

HOC: height-of-cut

HSBH: hex socket button head

HSFH: hex socket flat head

HSH: hex socket head

HWH: hex washer head

HWHTF: hex washer head thread forming

HYD: hydraulic

LH: left hand

LP: Liquefied Petroleum Gas

LPG: Liquefied Petroleum Gas

NI: nylon insert

NPTF: national pipe thread fine

PFH: phillips flat head

PPH: phillips pan head

PPHTF: phillips pan head thread forming

PRH: phillips round head

PTH: phillips truss head

PTO: power-take-off

RH: right hand

ROPS: roll-over protection system

RRB: rear roller brush

SFH: slotted fillister head

SHH: slotted hex head

SHWH: slotted hex washer head

SPH: slotted pan head

SQH: square head

SRH: slotted round head

STD: standard

TAP: self tapping

TTH: torx truss head

Contents

Frame and Caster Assembly 4
Roll-Over Protection System Assembly No. 116-0232 6
Caster Wheel and Fork Assembly 8
Hydraulic Pump, Idler and Belt Assembly 10
Pump Idler Assembly No. 116-1255 12
LH Hydro Assembly No. 116-6415 14
RH Hydro Assembly No. 116-6416 16
Rear Wheel and Park Brake Assembly 18
Parking Brake Handle Assembly No. 116-7551 20
Fuel Tank Mounting Assembly 22
Fuel Tank Assembly No. 116-3979 24
Seat Mounting Assembly 26
Seat Assembly No. 125-3107 28
Motion Control Assembly 30
Fender, Console and Control Assembly 32
LH Console Assembly No. 115-7401 34
RH Console Assembly No. 115-7400 36
Electrical Assembly 38
Deck Lift Assembly 40
Height-of-Cut Assembly No. 117-3842 42
Engine, Muffler and Clutch Assembly 44
Deck Assembly 46
Deck Decal Assembly No. 125-9391 48
Spindle Assembly No. 119-8560 50
Spindle Assembly No. 125-9324 52
Idler Assembly No. 126-0853 54
Deck Idler Assembly No. 126-1720 56
Attachments and Accessories 58

© 2014—The Toro® Company
8111 Lyndale Avenue South
Bloomington, MN 55420

Contact us at www.Toro.com.
Printed in the USA.
All Rights Reserved

Frame and Caster Assembly

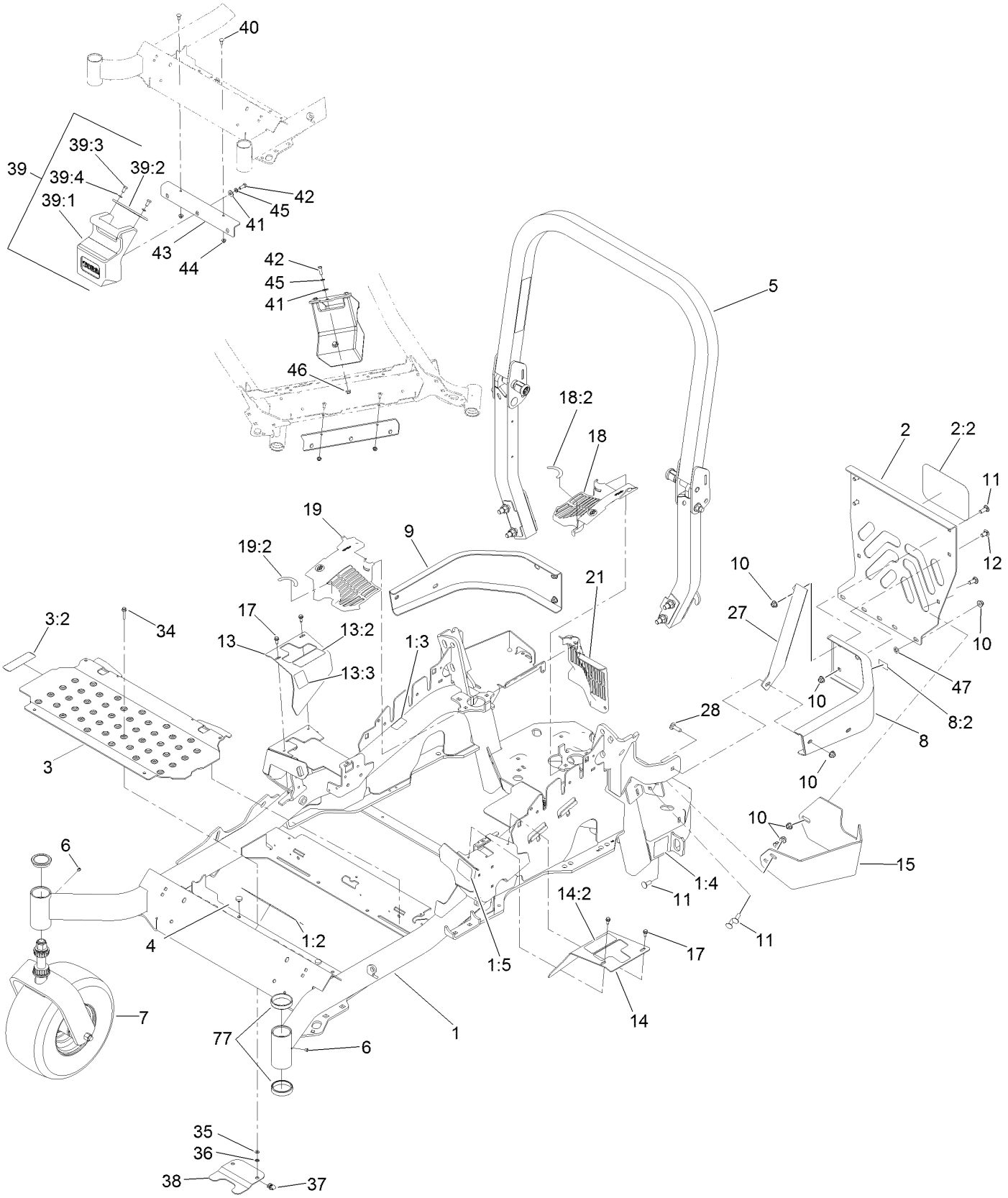

Frame and Caster Assembly (continued)

Ref.	Part Number	Qty.	Description
1	127-6652	1	Main Frame ASM
1:2	117-3888	1	Decal-Danger Slope W/ROPS
1:3	106-5517	2	Decal-Warning, Hot Surface
1:4	106-2655	2	Decal-Hazard, Pinched Finger
1:5	117-3864	1	Decal-Fuel Fill, Ce
2	115-7410	1	Rear Guard ASM
2:2	67-7320	1	Decal
3	117-0915	1	Floorpan ASM
3:2	112-9028	1	Decal-Cover Missing
4	1-513658	2	Bumper
5	116-0232	1	ROPS ASM
6	1-811010	2	Plug
7		2	Caster Wheel ASM ●
8	117-3829	1	LH Rear Bumper ASM
8:2	106-5517	1	Decal-Warning, Hot Surface
9	116-0057-03	1	Bumper-RH
10	104-8301	11	Nut-Flange, NI
11	3231-22	7	Screw-CARR
12	3231-21	3	Screw-CARR
13	116-5898	1	RH Motion Control Cover ASM
13:2	99-8936	1	Decal-Control, Motion
13:3	116-5988	1	Decal-Park Brake, Ce
14	117-3831	1	LH Motion Control Cover ASM
14:2	99-8936	1	Decal-Control, Motion
15	117-0908-03	1	Guard-Muffler
17	32144-10	4	Screw-HWH
18	117-3838	1	LH Hydro Guard ASM
18:2	117-3811	1	Decal-Hydro Oil
19	117-3839	1	RH Hydro Guard ASM
19:2	117-3811	1	Decal-Hydro Oil
21	109-9058	1	Guard-Hydro, Rear RH
27	117-0903-03	1	Strap
28	3231-25	1	Bolt-CARR
34	3234-21	2	Screw-HHF
35	3256-60	2	Washer-Flat
36	106-8737	2	Nut-Retainer
37	107069	2	Clip
38	119-0395-03	1	Adapter-Captive
39		1	Weight ASM ●
39:1	120-7881	1	Weight-43 Lb
39:2	115-3616-01	1	Tab-Support, Weight
39:3	323-4	2	Screw-HH
39:4	3253-5	2	Washer-Lock
40	3230-23	2	Screw-CARR
41	3256-4	2	Washer-Flat
42	323-6	2	Screw-HH
43	115-3615-01	1	Bracket-Mount, Weight
44	104-8300	2	Nut-Flange, NI
45	3253-5	2	Washer-Lock
46	104-8301	1	Nut-Flange, NI
47	107-3154	2	Nut-Push
77	1-543508	4	Cup-Bearing

● Not serviced separately

Roll-Over Protection System Assembly No. 116-0232

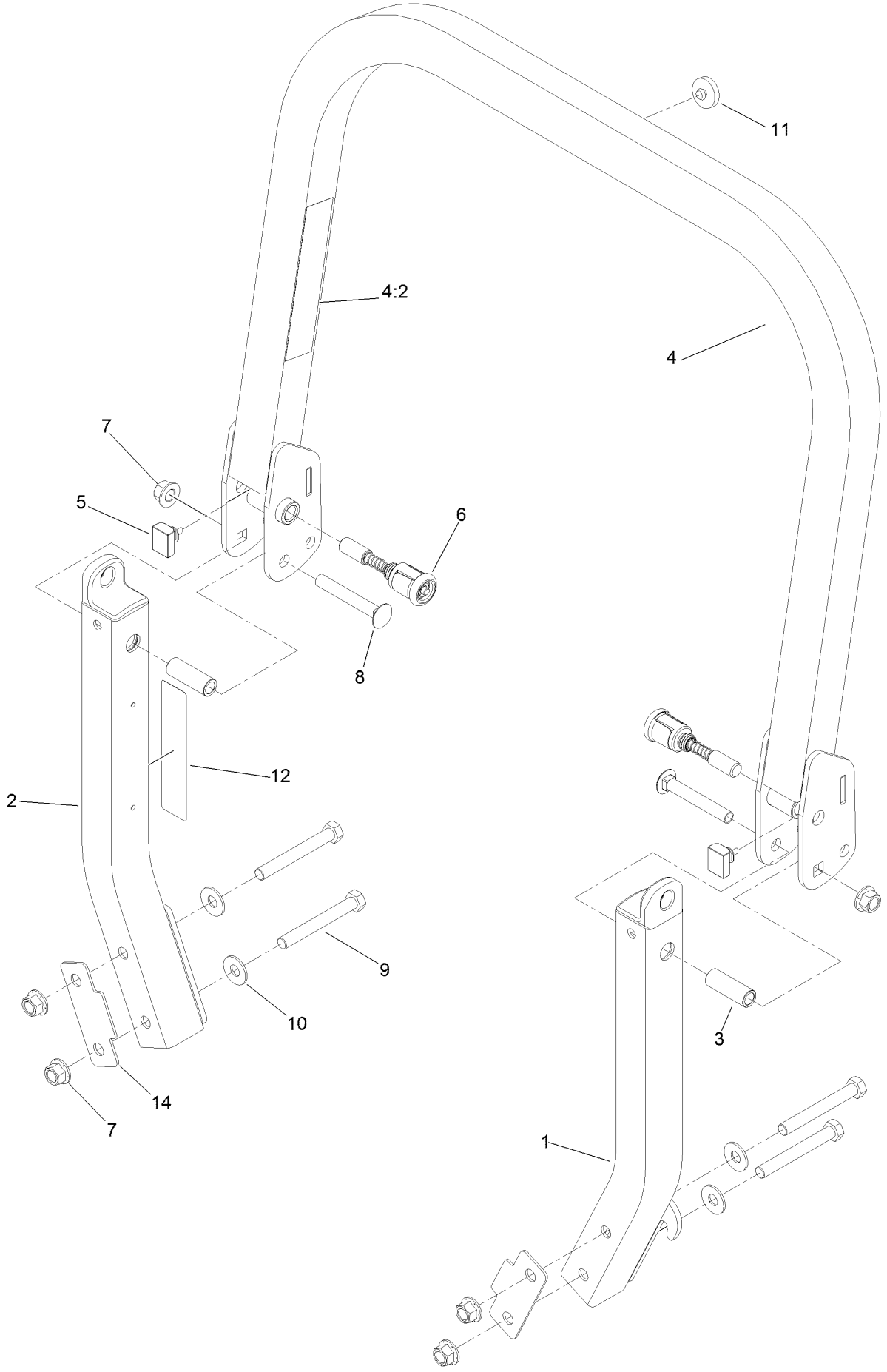

Roll-Over Protection System Assembly No. 116-0232 (continued)

Ref.	Part Number	Qty.	Description
1		1	Leg-ROPS, LH ●
2		1	Leg-ROPS, RH ●
3	109-6653	2	Spacer
4		1	Upper ROPS ASM ●
4:2	107-3069	1	Decal-Warning, Folding ROPS
5	109-5337	2	Bumper-ROPS
6	116-0104	2	Pin-Spring
7	99-5107	6	Nut-Lock
8	3233-10	2	Screw-CARR
9	325-17	4	Screw-HH
10	109-9505	4	Washer-Spring
11	109-9233	1	Bumper-Push-In, Rubber
12	117-0346	1	Decal-Caution, Fuel Vent
14	116-0960	2	Spacer

● Not serviced separately

Caster Wheel and Fork Assembly

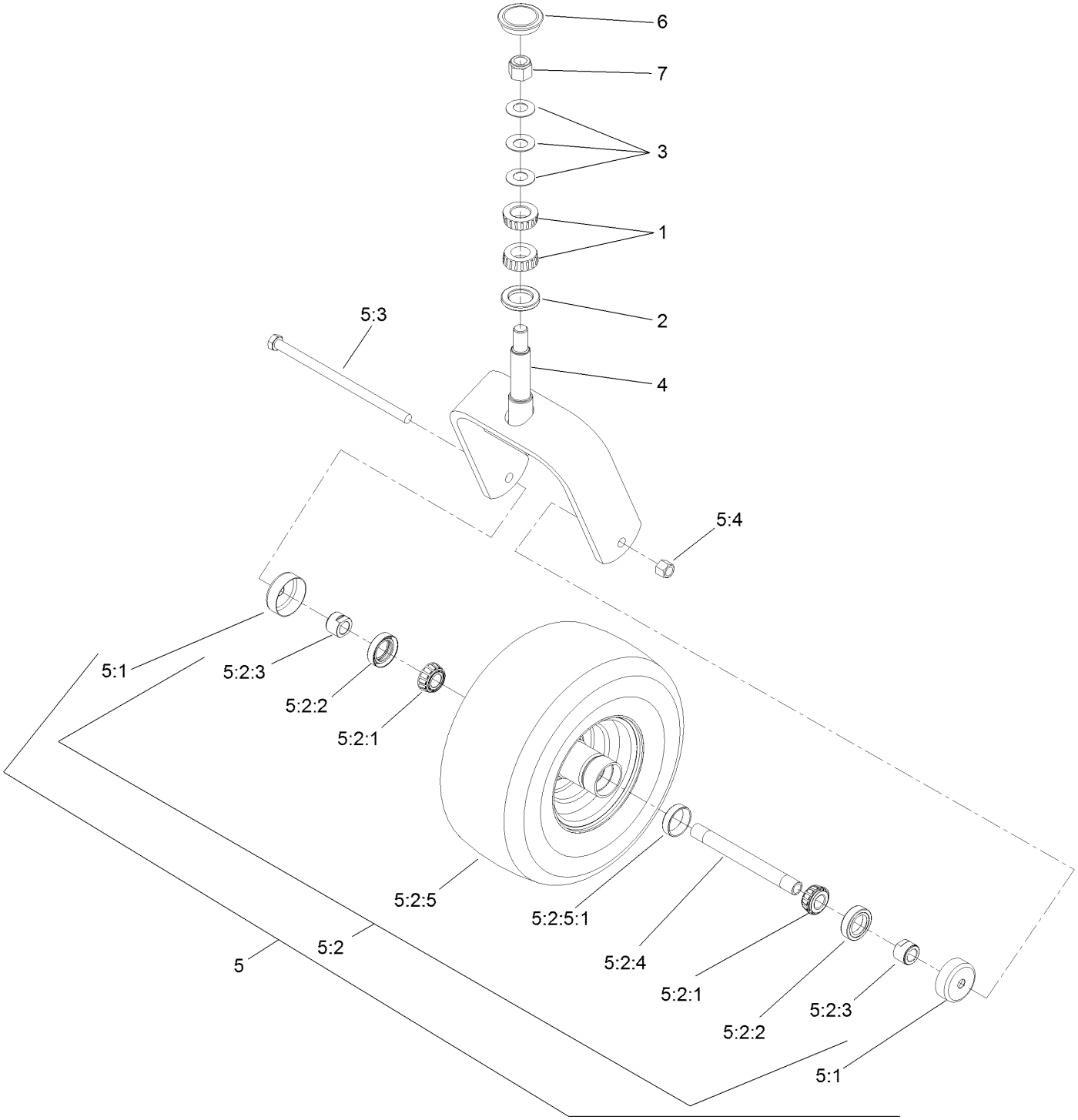

Caster Wheel and Fork Assembly (continued)

Ref.	Part Number	Qty.	Description
1	1-543509	2	Bearing-Roller, Tapered
2	116-5647	1	Seal-Grease
3	1-633508	3	Washer-Bellville
4	116-6707-01	1	Caster
5	109-9127	1	Wheel And Tire ASM
5:1	103-2768	2	Guard-Seal
5:2		1	Wheel And Tire ASM ●
5:2:1	1-633585	2	Bearing-Cone, Taper
5:2:2	103-0063	2	Seal-Caster
5:2:3	103-3051	2	Spacer-Nut ■
5:2:4	103-5156	1	Axle-Caster
5:2:5		1	Wheel And Tire ASM ●
5:2:5:1	1-633584	1	Bearing-Cup
5:3	325-39	1	Screw-HH
5:4	3296-23	1	Nut-Lock, NI
6	103-4882	1	Cap-Grease
7	3296-51	1	Nut-Lock, NI

● Not serviced separately
■ Use Pro-Lock, Nut Type (P/N 1-840022, .5ml tube) on threads.

Hydraulic Pump, Idler and Belt Assembly

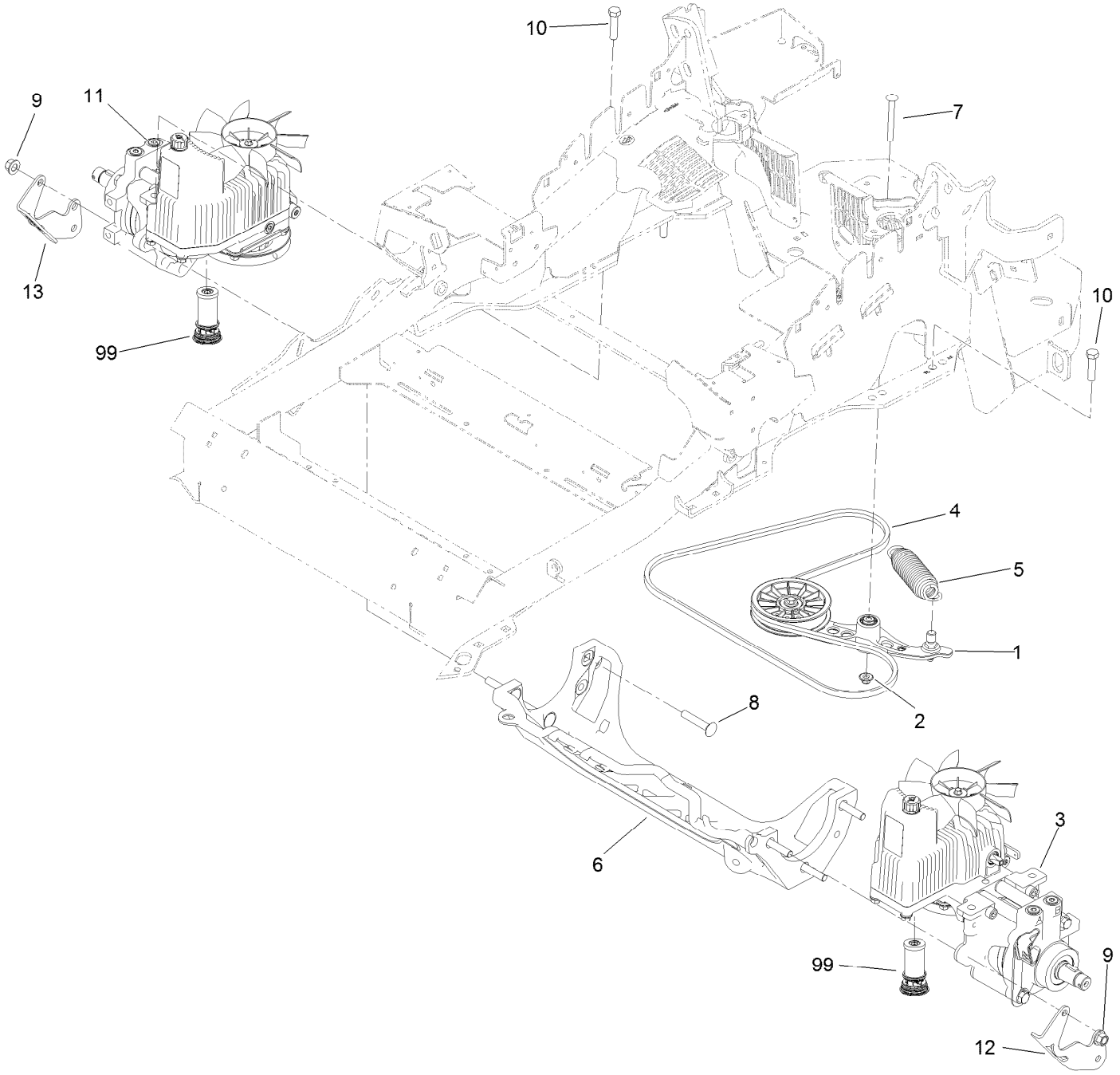

Hydraulic Pump, Idler and Belt Assembly (continued)

Ref.	Part Number	Qty.	Description
1	116-1255	1	Pump Idler ASM
2	109-6658	1	Nut-Flange, NI
3	116-6415	1	LH Hydro ASM (16Cc W/Shock)
4	109-3388	1	Belt
5	116-6317	1	Spring-Extension
6	109-9375	1	Cradle-Hydro
7	116-1502	1	Bolt-Shoulder, Carriage
8	126-0095	6	Screw-CARR
9	99-5107	6	Nut-Lock
10	325-8	4	Screw-HH
11	116-6416	1	RH Hydro ASM (16Cc W/Shock)
12	125-9369-03	1	Bracket-Discharge Mount, LH
13	125-9370-03	1	Bracket-Discharge Mount, RH
99	114-4713	1	Hypr-Oil 500 (Quart) ●
99	114-4714	1	Hypr-Oil 500 (Gallon) ●
99	114-4715	1	Hypr-Oil 500-5 (5 Gallon) ●
99	117-0390	1	Filter-Hydro

● Not illustrated

Pump Idler Assembly No. 116-1255

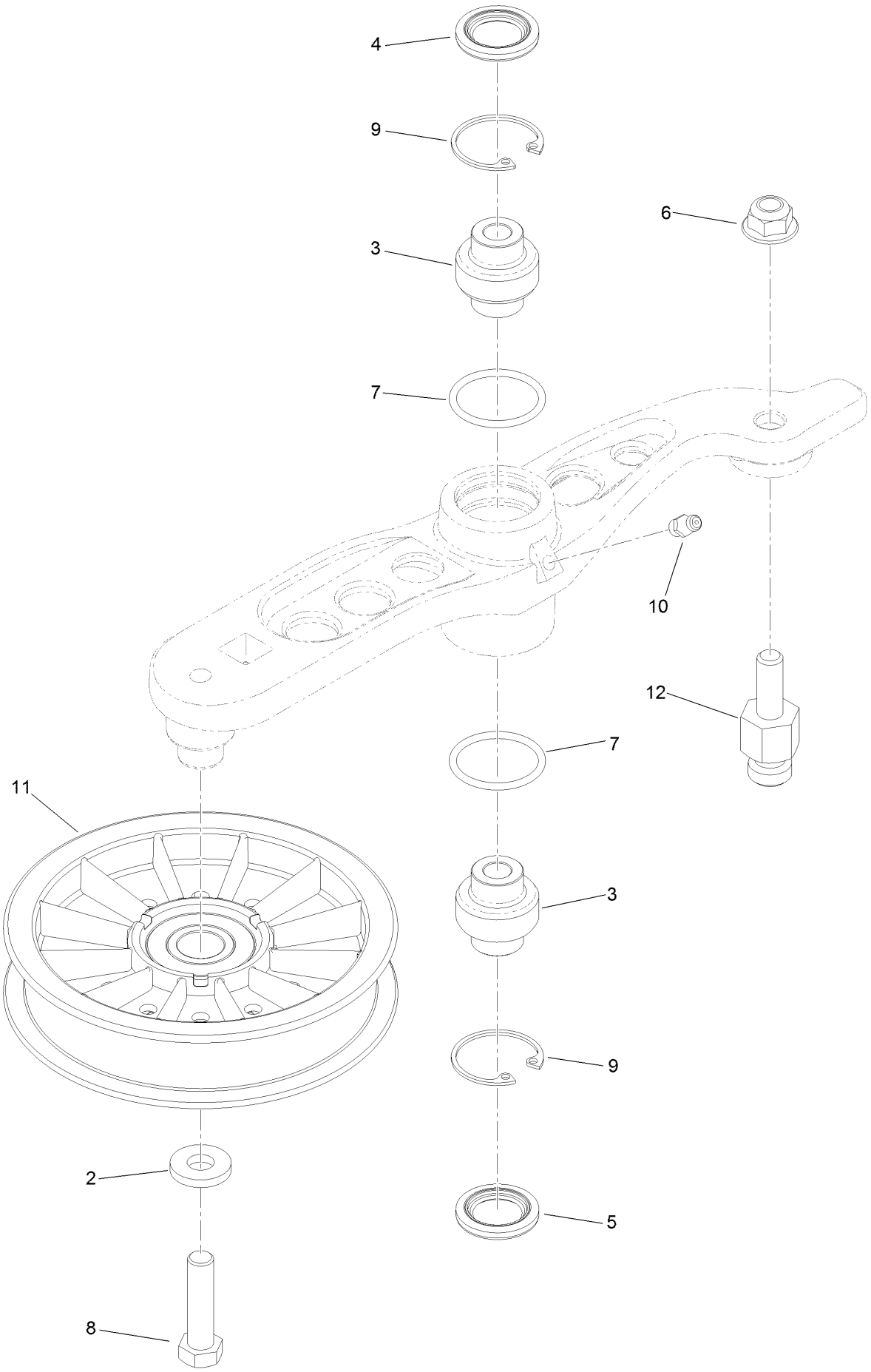

Pump Idler Assembly No. 116-1255 (continued)

Ref.	Part Number	Qty.	Description
2	43-0940	1	Spacer
3	103-3504	2	Bearing-Spherical
4	103-3505	1	Seal-Double Lip
5	103-3506	1	Seal-Single Lip
6	109-6658	1	Nut-Flange, NI
7	106-7159	2	O-Ring
8	323-8	1	Screw-HH
9	32120-10	2	Ring-Snap
10	302-19	1	Fitting-Grease
11	109-8076	1	Pulley-Idler
12	116-3467	1	Pin-Spring, Anchor

LH Hydro Assembly No. 116-6415

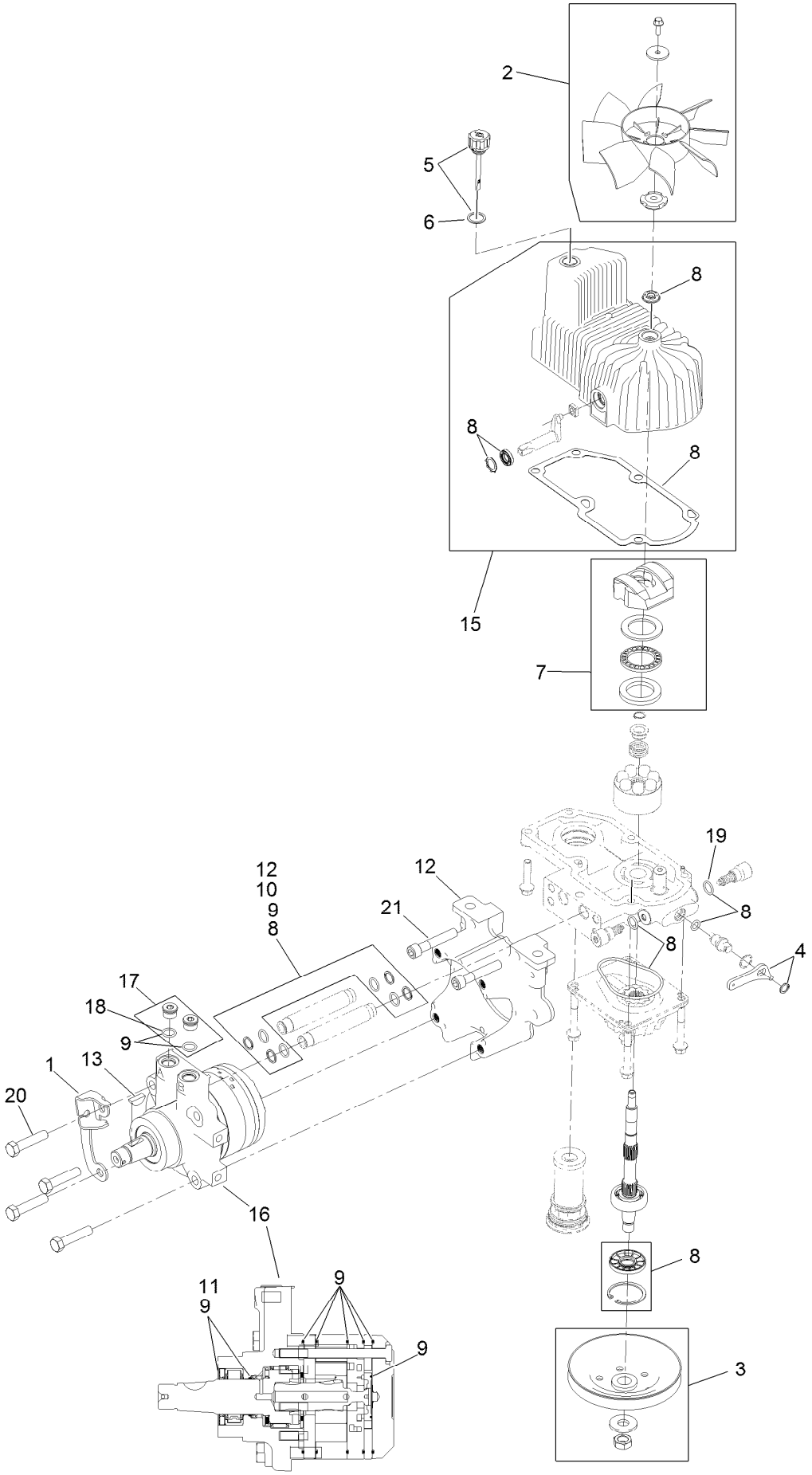

LH Hydro Assembly No. 116-6415 (continued)

Ref.	Part Number	Qty.	Description
1	116-6859	1	Bracket-Anchor, Cable
2	116-0233	1	Fan Kit
3	116-0234	1	Pulley Kit
4	116-0235	1	Handle-Bypass Valve, Hydro
5	116-0236	1	Dipstick-Hydro W/Gasket
6	116-0237	1	Gasket-Dipstick, Hydro
7	116-1367	1	Swash Block Kit
8	116-1368	1	Pump Seal Kit
9	116-1369	1	Motor Seal Kit
10	116-1370	1	Tube Seal Kit
11	116-1371	1	Output Shaft Seal Kit
12	116-5469	1	Nose Cup-Uht
13	3257-42	1	Key-Woodruff
15	116-3287	1	Housing-LH
16	116-8917	1	Motor-Hydraulic, LH 280Cc
17	116-7901	1	Magnetic Plugs Service Kit
18	76-1900	2	O-Ring
19	116-8662	2	O-Ring-Check Valve
20	116-8974	4	Screw HH
21	116-8975	2	Screw-HSH
99	116-1373	1	Flow Test Kit ●

● Not illustrated

RH Hydro Assembly No. 116-6416

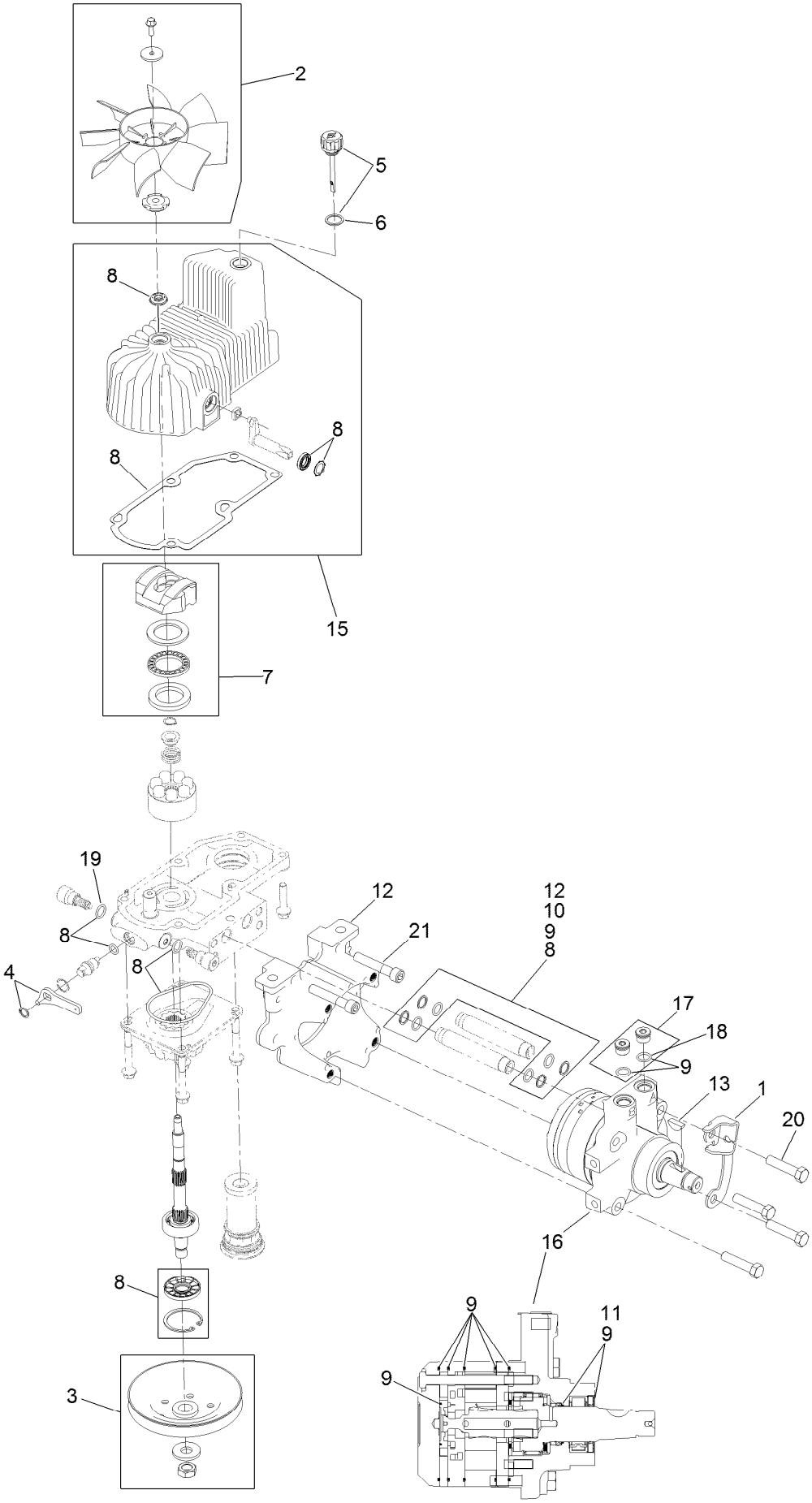

RH Hydro Assembly No. 116-6416 (continued)

Ref.	Part Number	Qty.	Description
1	116-6859	1	Bracket-Anchor, Cable
2	116-0233	1	Fan Kit
3	116-0234	1	Pulley Kit
4	116-0235	1	Handle-Bypass Valve, Hydro
5	116-0236	1	Dipstick-Hydro W/Gasket
6	116-0237	1	Gasket-Dipstick, Hydro
7	116-1367	1	Swash Block Kit
8	116-1368	1	Pump Seal Kit
9	116-1369	1	Motor Seal Kit
10	116-1370	1	Tube Seal Kit
11	116-1371	1	Output Shaft Seal Kit
12	116-5469	1	Nose Cup-Uht
13	3257-42	1	Key-Woodruff
15	116-3288	1	Housing-RH
16	116-8918	1	Motor-Hydraulic, RH 280Cc
17	116-7901	1	Magnetic Plugs Service Kit
18	76-1900	2	O-Ring
19	116-8662	2	O-Ring-Check Valve
20	116-8974	4	Screw HH
21	116-8975	2	Screw-HSH
99	116-1373	1	Flow Test Kit ●

● Not illustrated

Rear Wheel and Park Brake Assembly

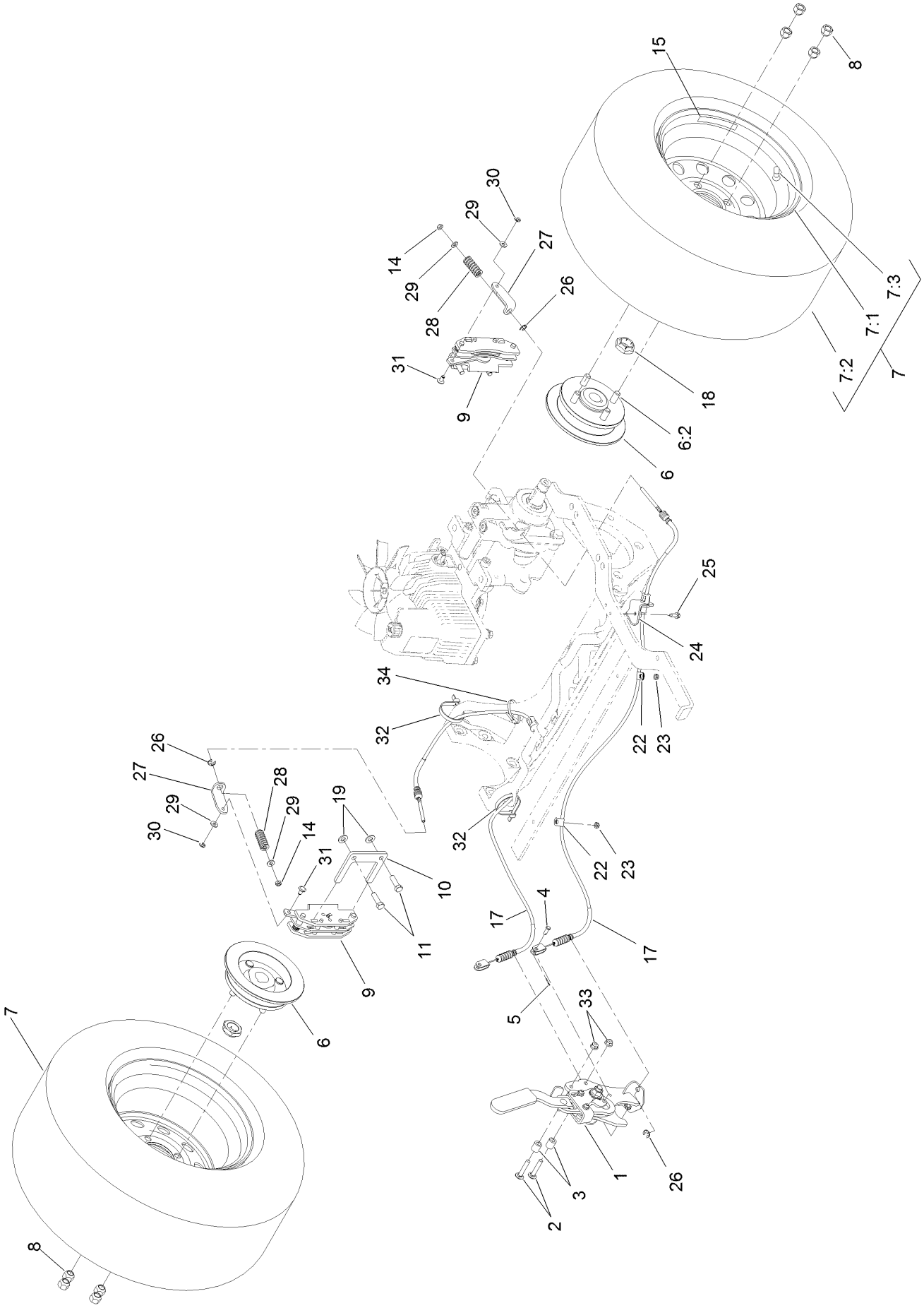

Rear Wheel and Park Brake Assembly (continued)

Ref.	Part Number	Qty.	Description
1	116-7551	1	Brake Handle ASM
2	116-0629	2	Screw-CARR
3	82-6840	2	Spacer
4	60-1730	2	Pin-Clevis
5	3272-1	2	Pin-Cotter
6	116-1746	2	Wheel Hub ASM
6:2	116-1696	4	Stud-Wheel
7	115-3588	2	Wheel And Tire ASM
7:1	109-2871	1	Rim
7:2	1-633993	1	Tire
7:3	232-27	1	Stem-Valve
8	242-50	8	Nut-Lug
9	109-2889	2	Caliper-Brake
10	109-0958	2	Plate-Mount, Brake
11	92-5727	4	Screw-Lock, Patch
14	3296-13	2	Nut-Lock, NI
15	117-3863	2	Decal-Wheel Hub, Ce
17	116-8963	2	Cable-Brake
18	116-1399	2	Locknut
19	3256-24	4	Washer-Flat
22	88-7970	2	Clip
23	3296-56	2	Nut-Lock, NI
24	116-6397	1	Bracket-Cable
25	32144-10	1	Screw-HWH
26	32120-18	4	E-Ring
27	116-6182	2	Bracket-Brake, L
28	116-6347	2	Spring-Die
29	3256-22	4	Washer-Flat
30	32151-86	2	E-Ring
31	116-6348	2	Pin-Brake
32	3334-945	2	Tie-Cable
33	104-8300	2	Nut-Flange, NI
34	116-0940	1	Tie-Cable

Parking Brake Handle Assembly No. 116-7551

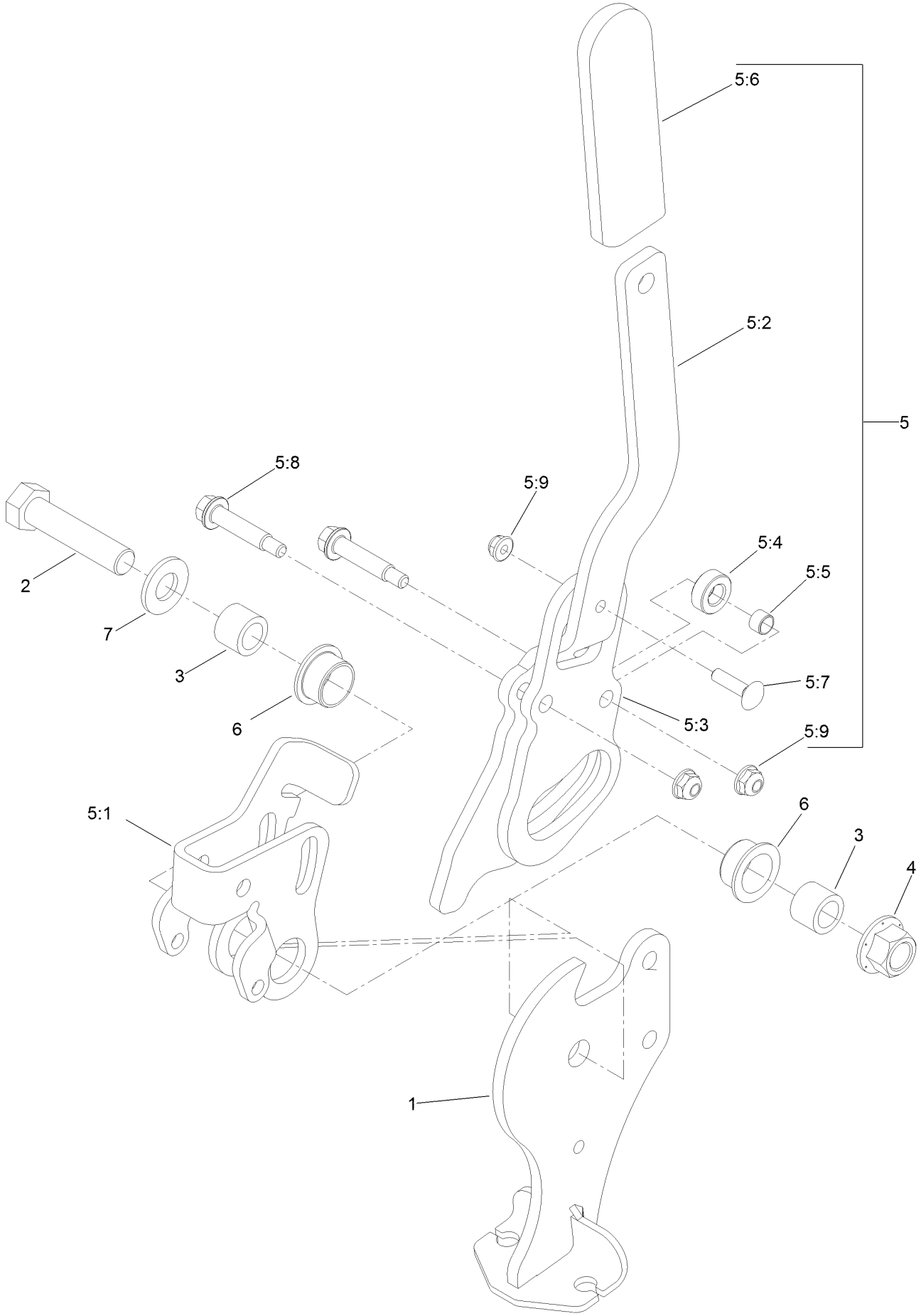

Parking Brake Handle Assembly No. 116-7551 (continued)

Ref.	Part Number	Qty.	Description
1	116-7263	1	Pivot-Brake
2	325-9	1	Screw-HH
3	116-5384	2	Spacer
4	99-5107	1	Nut-Lock
5	116-6860	1	Handle ASM
5:1	116-6856	1	Bellcrank-Brake
5:2	116-6857	1	Handle-Brake
5:3	116-6858	1	Plate-Handle
5:4	116-6846	1	Roller-Brake
5:5	116-6852	1	Bearing-Sleeve
5:6	1-633268	1	Grip-Lever
5:7	3229-2	1	Screw-CARR
5:8	116-6876	2	Screw-Shoulder
5:9	104-7201	3	Nut-HF
6	109-8054	2	Bushing-Flange
7	3256-26	1	Washer-Flat

Fuel Tank Mounting Assembly

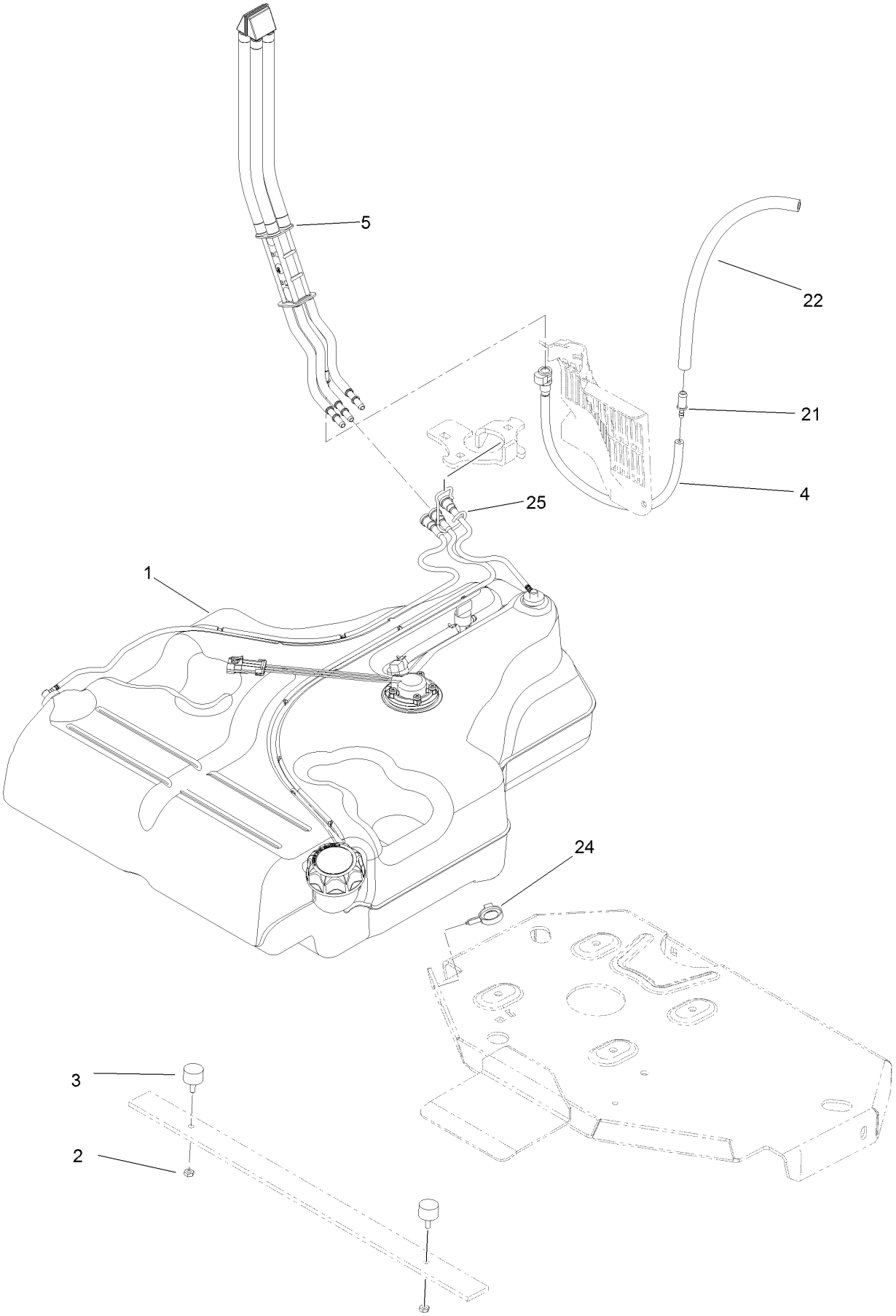

Fuel Tank Mounting Assembly (continued)

Ref.	Part Number	Qty.	Description
1	116-3979	1	Fuel Tank ASM
2	3218-1	2	Nut-Jam
3	116-6380	2	Bumper-Rubber (W/ Stud)
4	116-3977	1	Hose ASM
5	109-9491	1	Fuel Manifold Vent ASM

Ref.	Part Number	Qty.	Description
21	98-2952	1	Fitting-Straight
22	116-5087	1	Hose-Fuel
24	105-1853	1	Clamp-Hose
25	116-6005	1	Retainer-Vapor Line

Fuel Tank Assembly No. 116-3979

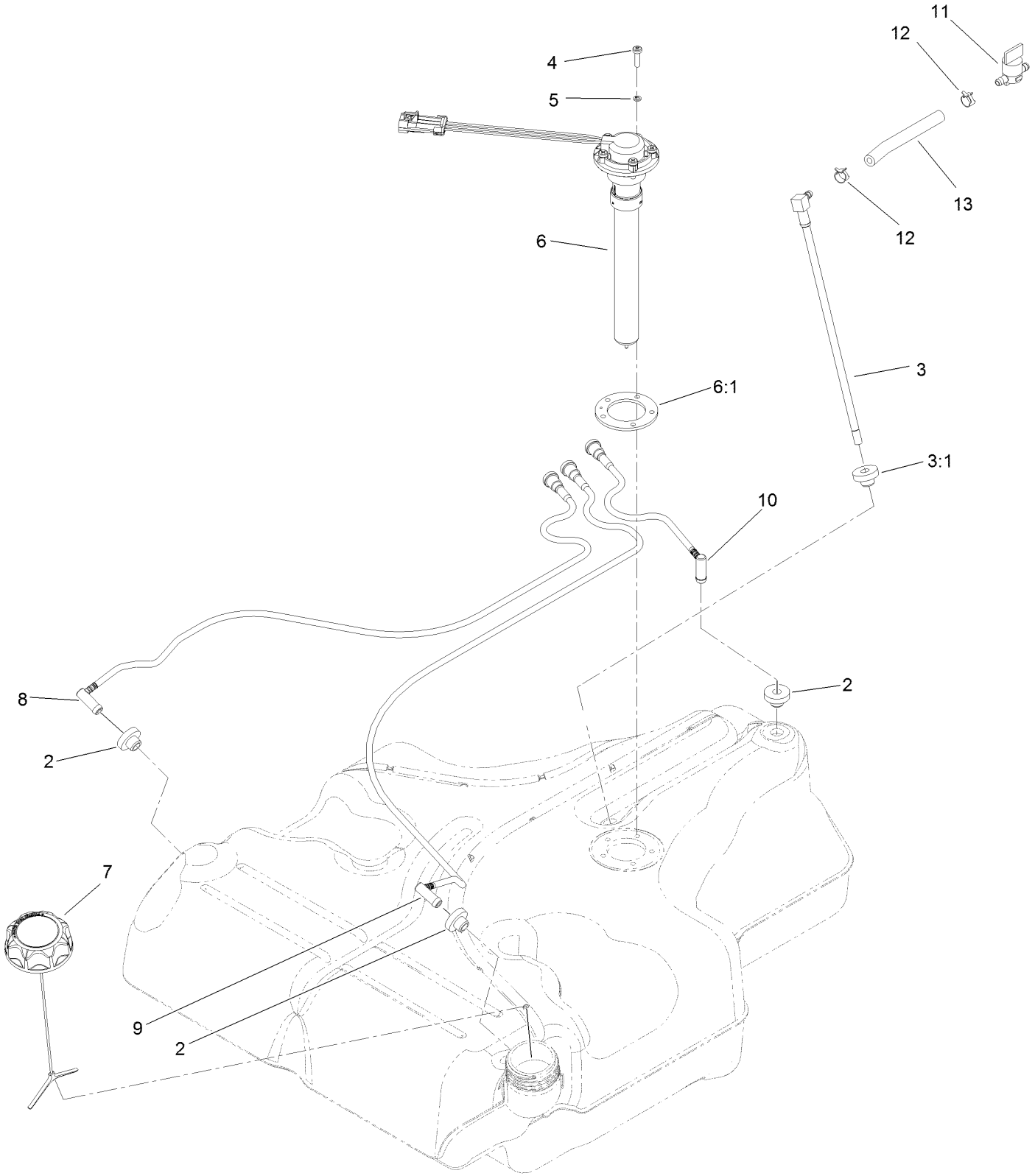

Fuel Tank Assembly No. 116-3979 (continued)

Ref.	Part Number	Qty.	Description
2	46-6560	4	Bushing
3	116-2459	1	Fuel Line Kit (With Grommet)
3:1	46-6560	1	Bushing
4	9107944	5	Screw-Pan
5	3253-17	5	Washer-Lock
6	116-0003	1	Sender-Fuel Level
6:1	109-9620	1	Gasket-Sender, Fuel
7	126-1789	1	Cap-Fuel, Ratcheting
8	116-2460	1	RH Vent Line Kit (With Grommet)
9	116-2461	1	LH Vent Line Kit (With Grommet)
10	116-2462	1	Rear Vent Line Kit (With Grommet)
11	1-603770	1	Valve-Fuel
12	2412-98	2	Clamp-Hose
13	109-0650	1	Hose-Fuel

Seat Mounting Assembly

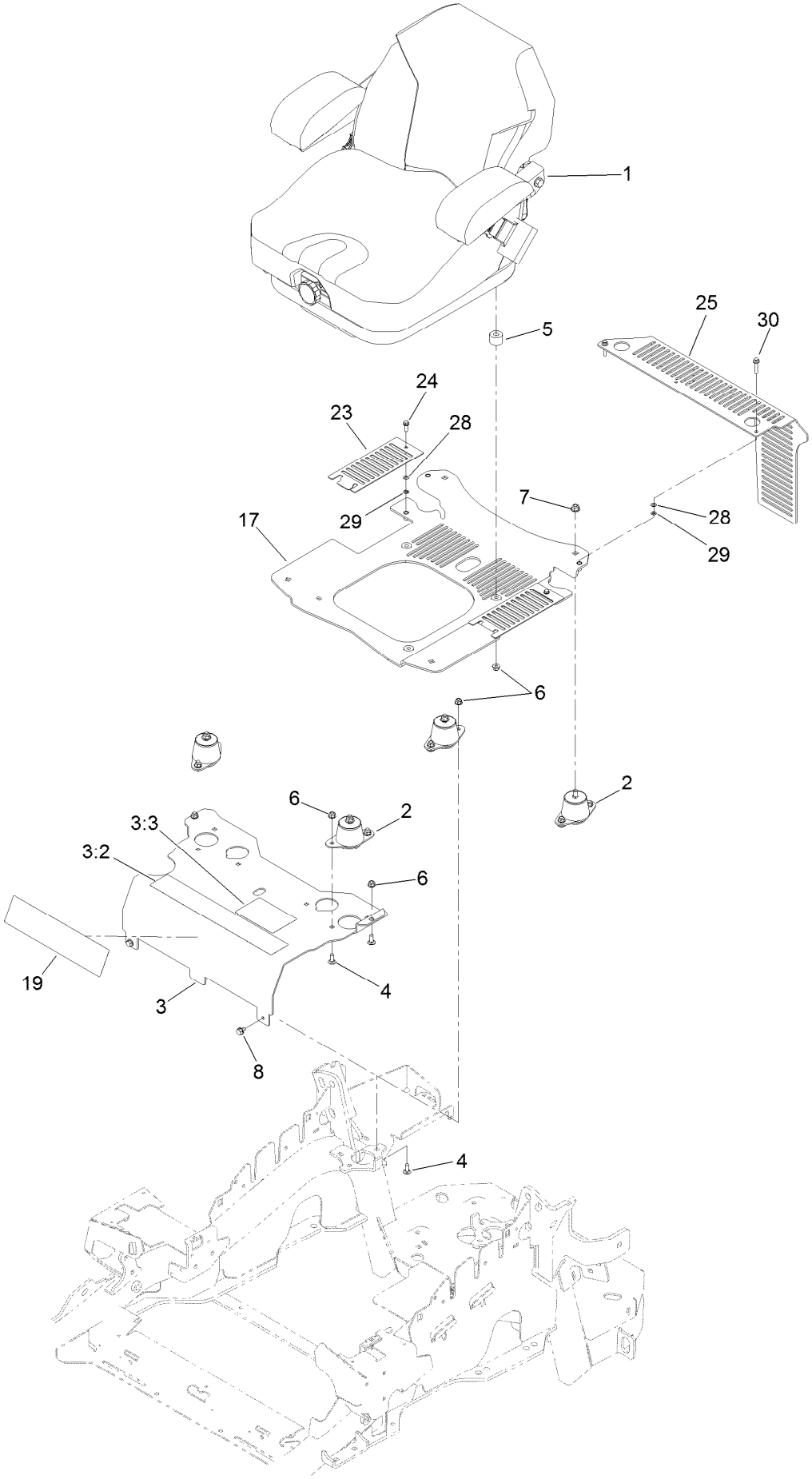

Seat Mounting Assembly (continued)

Ref.	Part Number	Qty.	Description
1	125-3107	1	Suspension Seat ASM
2	109-9034	4	Isolator-Seat
3	116-2324	1	Mount-Seat
3:2	114-4468	1	Decal-Console
3:3	125-9383	1	Decal-Service Aid
4	3230-23	11	Screw-CARR
5	116-9329	4	Spacer
6	104-8300	18	Nut-Flange, NI
7	104-8301	4	Nut-Flange, NI
8	9266934	2	Screw
17	117-0910	1	Seat Base ASM
19	120-5893	1	Decal
23	117-0901-03	2	Cover
24	32105-15	2	Screw-HWH
25	114-1548-03	1	Guard
28	3256-60	4	Washer-Flat
29	106-8737	4	Nut-Retainer
30	3234-21	2	Screw-HHF

Seat Assembly No. 125-3107

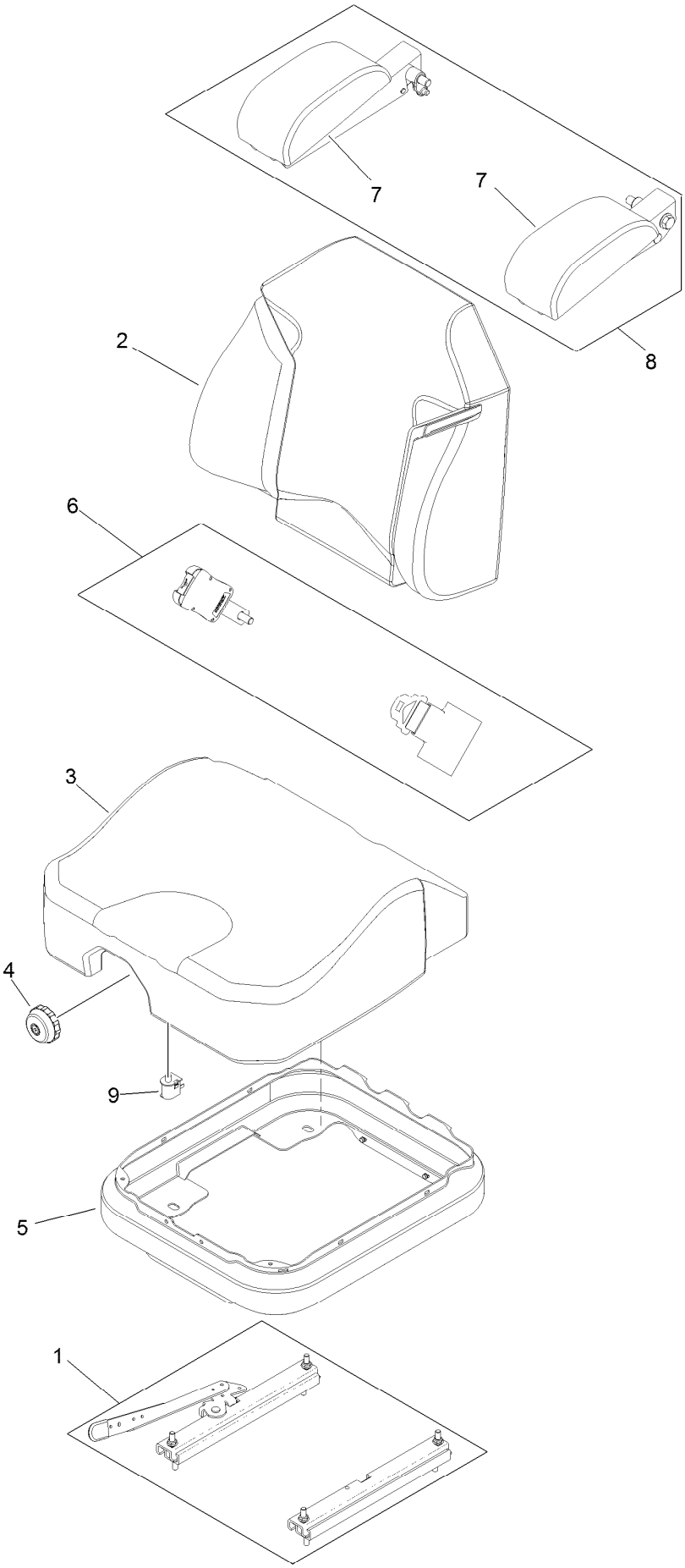

Seat Assembly No. 125-3107 (continued)

Ref.	Part Number	Qty.	Description
1	116-8910	1	Seat Track Set
2	125-3112	1	Cover-Back
3	125-3111	1	Cover-Cushion
4	116-8911	1	Knob-Adjuster
5	116-5659	1	Cover-Suspension Bellows
6	109-9805	1	Seat Belt Kit
7	109-9802	1	Arm Rest Pad Set
8	109-9803	1	Arm Rest Set
9	82-2190	1	Switch-Bail

Motion Control Assembly

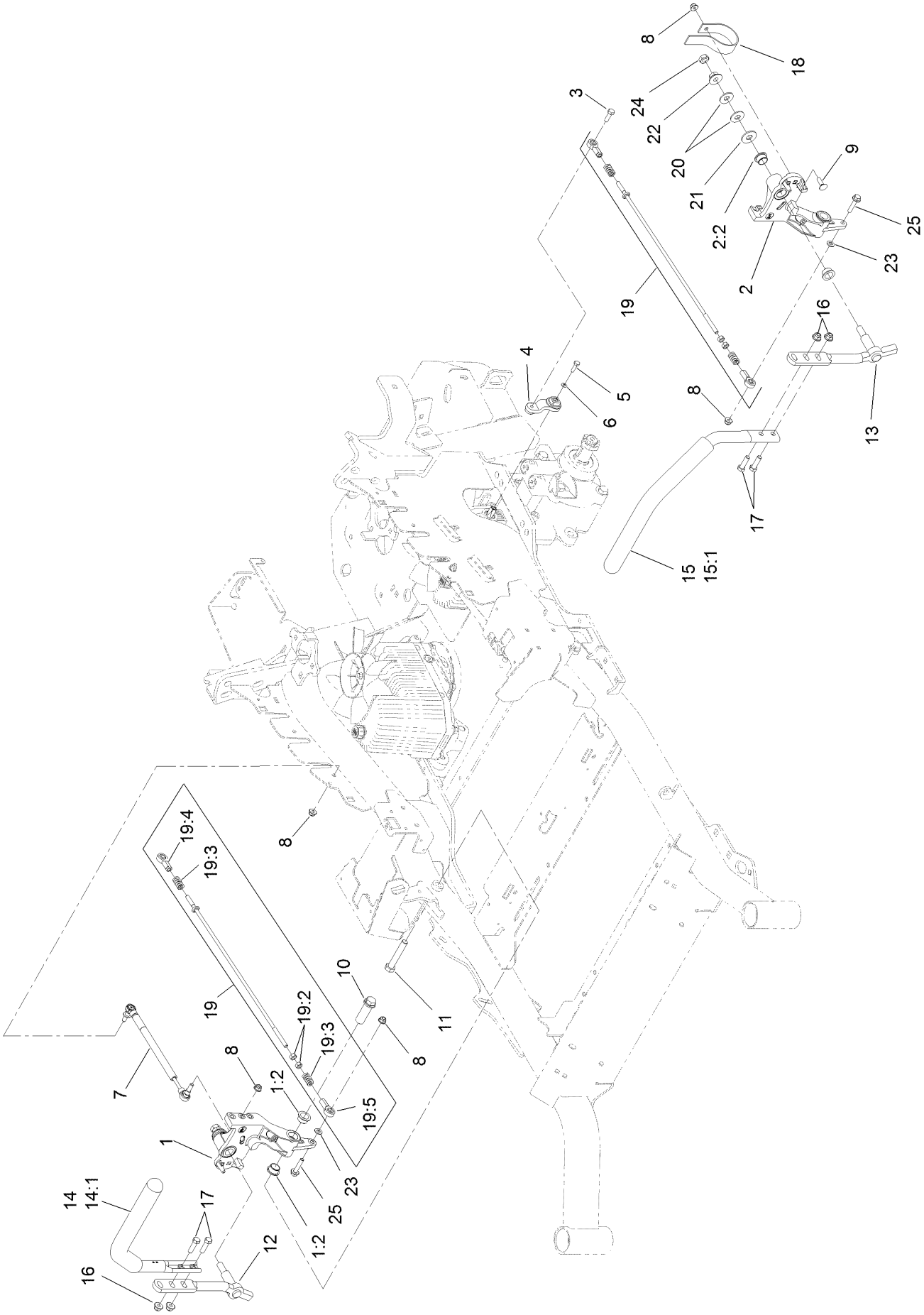

Motion Control Assembly (continued)

Ref.	Part Number	Qty.	Description
1	116-0880	1	RH Motion Control And Bushing ASM
1:2	109-8054	4	Bushing-Flange
2	116-0881	1	LH Motion Control And Bushing ASM
2:2	109-8054	4	Bushing-Flange
3	116-0648	2	Screw-HH, Thread Locking ●
4	109-4581	2	Arm-Control, Pump
5	9080046	2	Screw-HH ●
6	1-303435	2	Washer-Spring
7	116-0027	2	Damper-Control, Motion
8	104-8300	8	Nut-Flange, NI
9	3230-2	2	Bolt-CARR
10	109-5891	2	Hub-Threaded
11	325-12	2	Screw-HH
12	116-0039	1	Lever-Control Motion, RH
13	116-0040	1	Lever-Control Motion, LH

Ref.	Part Number	Qty.	Description
14	109-6589	1	RH Steering Handle ASM
14:1	109-5668	1	Grip-Control, Lever
15	109-6590	1	LH Steering Handle ASM
15:1	109-5668	1	Grip-Control, Lever
16	104-8301	4	Nut-Flange, NI
17	323-7	4	Screw-HH
18	109-5575	2	Spring-Leaf
19	109-8106	2	Front Pump Linkage ASM
19:2	3219-2	2	Nut-Hex
19:3	1-323245	2	Spring-Compression
19:4	1-633152	1	Balljoint-LH
19:5	1-543017	1	Balljoint-RH
20	109-9505	4	Washer-Spring
21	3256-6	2	Washer-Flat
22	32128-56	2	Nut-HF
23	3256-23	2	Washer-Flat
24	3218-5	2	Nut-Jam
25	115-1794	2	Screw-HHF

● Use Pro-Lock, Nut Type (P/N 1-840022, .5ml tube) on threads.

Fender, Console and Control Assembly

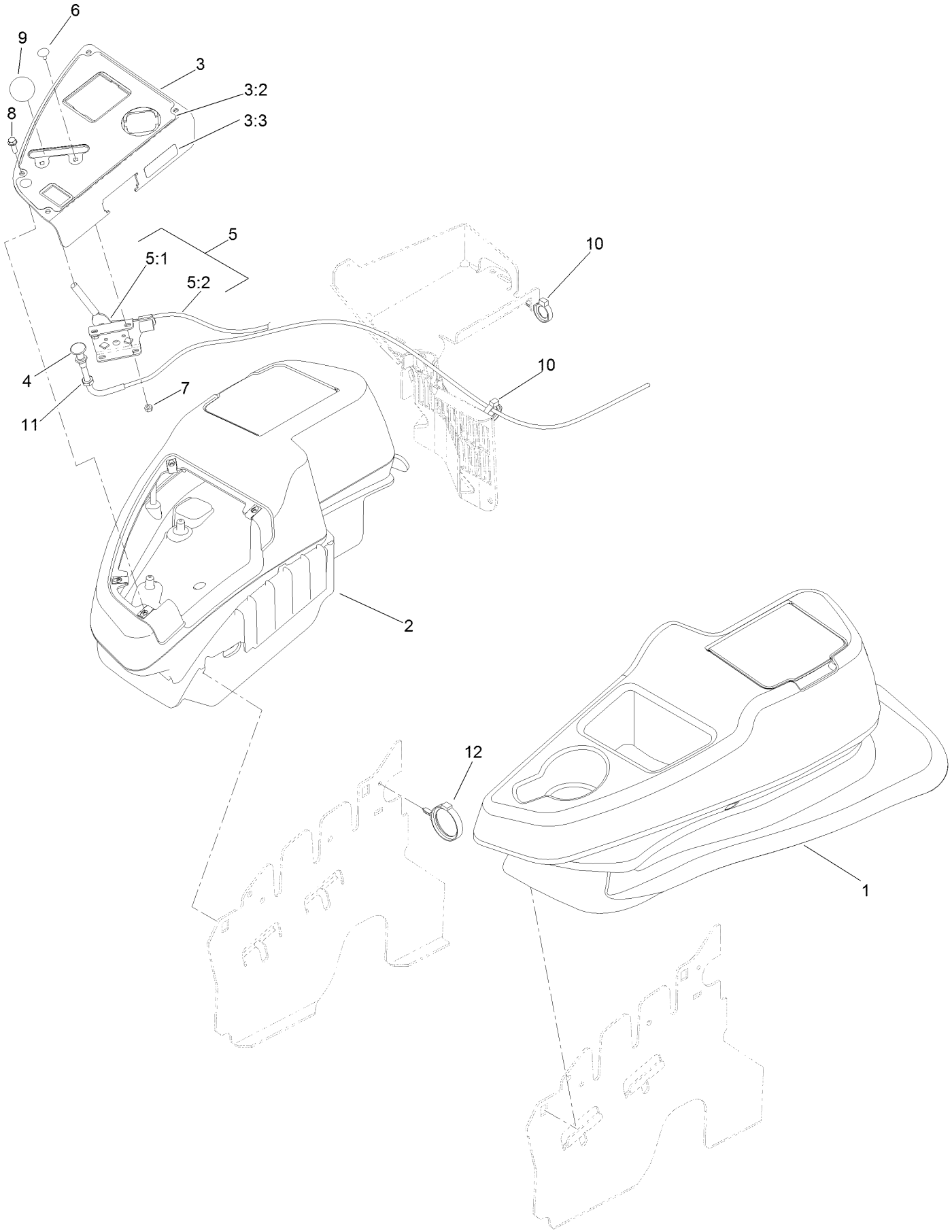

Fender, Console and Control Assembly (continued)

Ref.	Part Number	Qty.	Description
1	115-7401	1	LH Wide Fender/Console ASM
2	115-7400	1	RH Wide Fender/Console ASM
3	114-9836	1	Control Panel ASM
3:2	120-5897	1	Decal-Control Panel
3:3	114-4466	1	Decal-Fuses
4	115-2753	1	Control-Choke
5	110-5727	1	Throttle Control ASM
5:1	112-2334	1	Lever-Throttle
5:2	110-5728	1	Cable-Throttle
6	1-807513	2	Bolt-CARR
7	3296-2	2	Nut-Lock, NI
8	32105-15	4	Screw-HWH
9	1-603175	1	Knob-Ball
10	105-1853	1	Clamp-Hose
11	3220-3	1	Nut-HJ
12	117-7817	1	Clamp-Harness

LH Console Assembly No. 115-7401

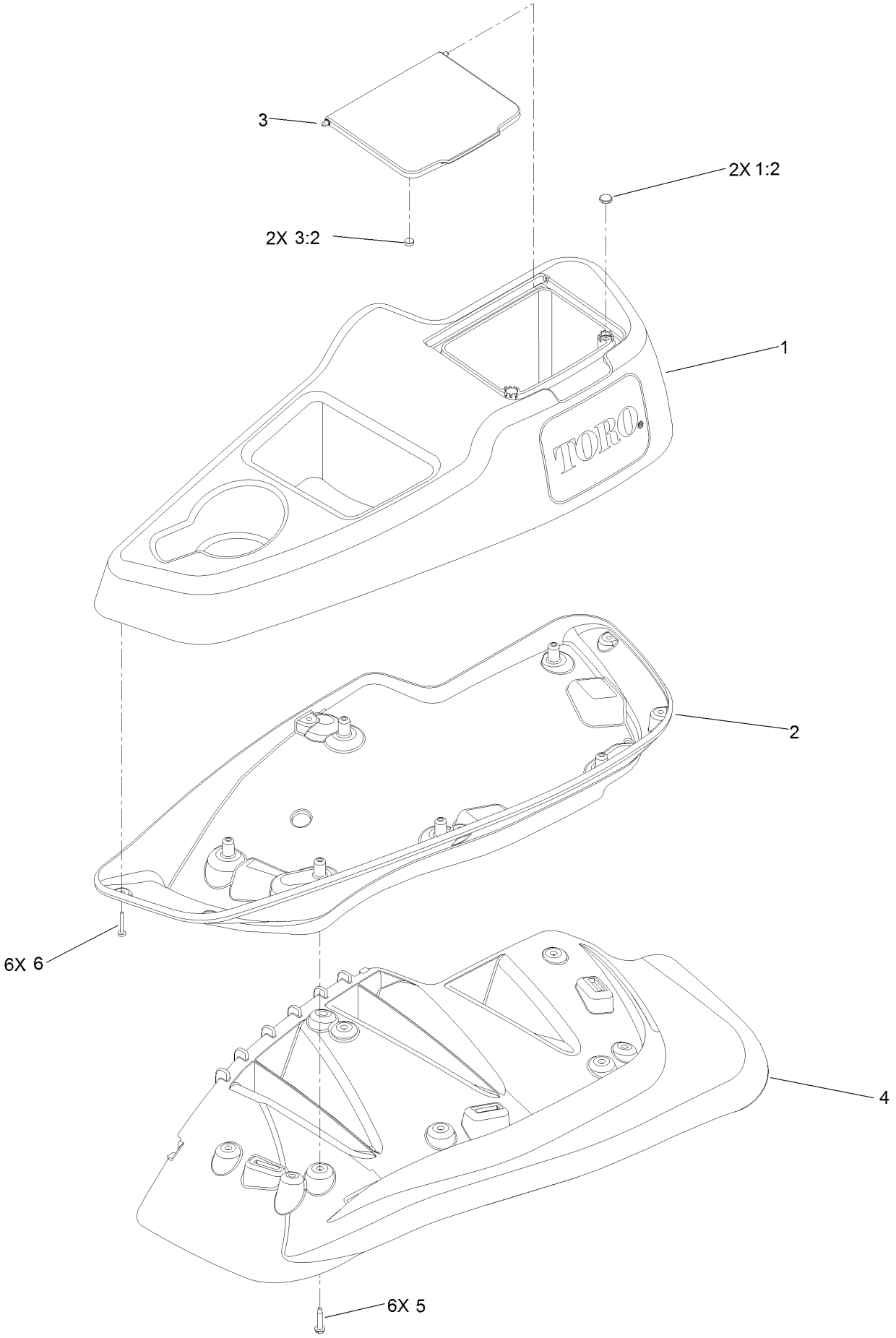

LH Console Assembly No. 115-7401 (continued)

Ref.	Part Number	Qty.	Description
1	114-1539	1	LH Wide Console Top ASM
1:2	117-0883	2	Puck
2	115-3641	1	Console-Lower, LH Wide
3	114-1537	1	Wide Lid ASM
3:2	114-5896	2	Magnet
4	109-9085	1	Fender-Wide, LH
5	32144-89	6	Screw-Thread Forming
6	117-0347	6	Screw-Fillister Head

RH Console Assembly No. 115-7400

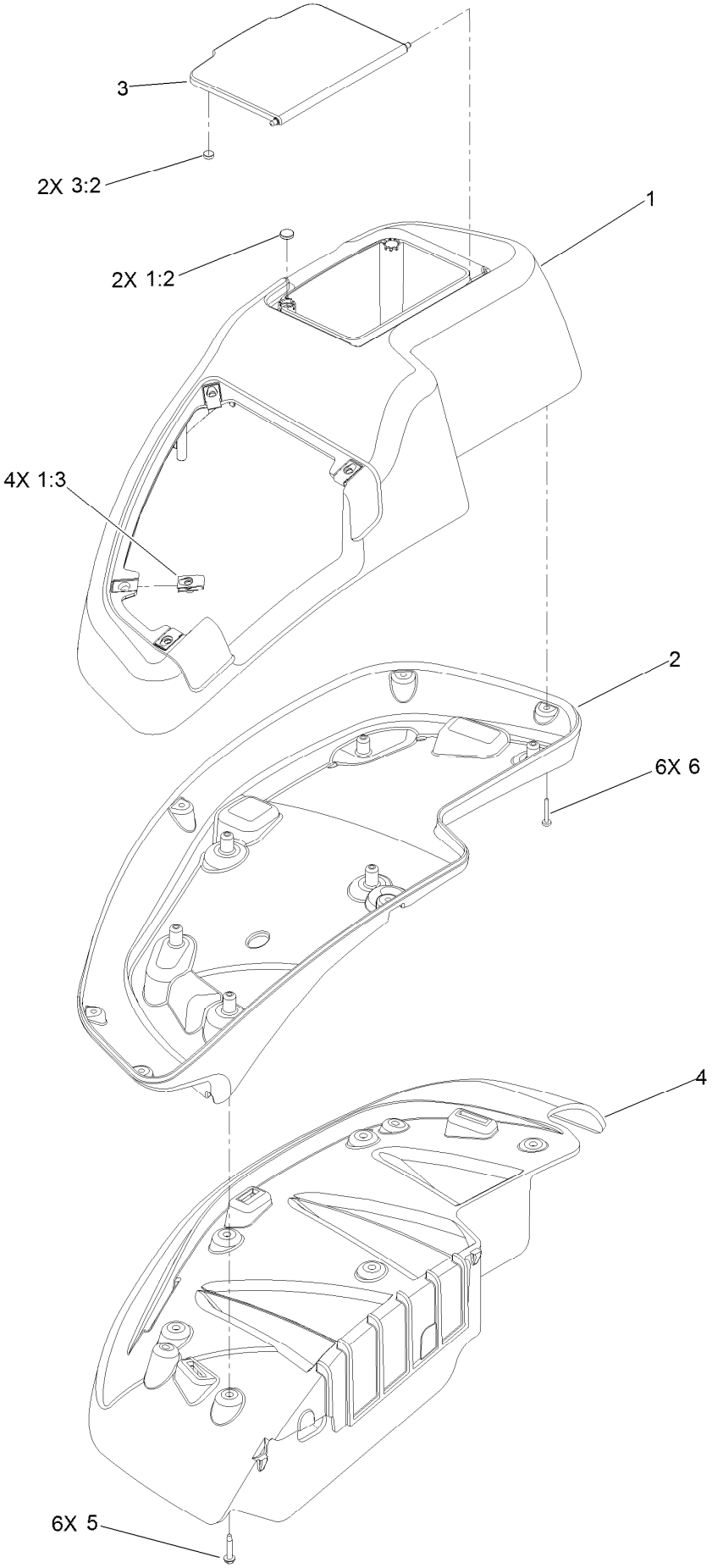

RH Console Assembly No. 115-7400 (continued)

Ref.	Part Number	Qty.	Description
1	114-1538	1	RH Wide Top Console ASM
1:2	117-0883	2	Puck
1:3	107069	4	Clip
2	115-3643	1	Console-Lower, RH Wide
3	114-1537	1	Wide Lid ASM
3:2	114-5896	2	Magnet
4	109-9083	1	Fender-Wide, RH
5	32144-89	6	Screw-Thread Forming
6	117-0347	6	Screw-Fillister Head

Electrical Assembly

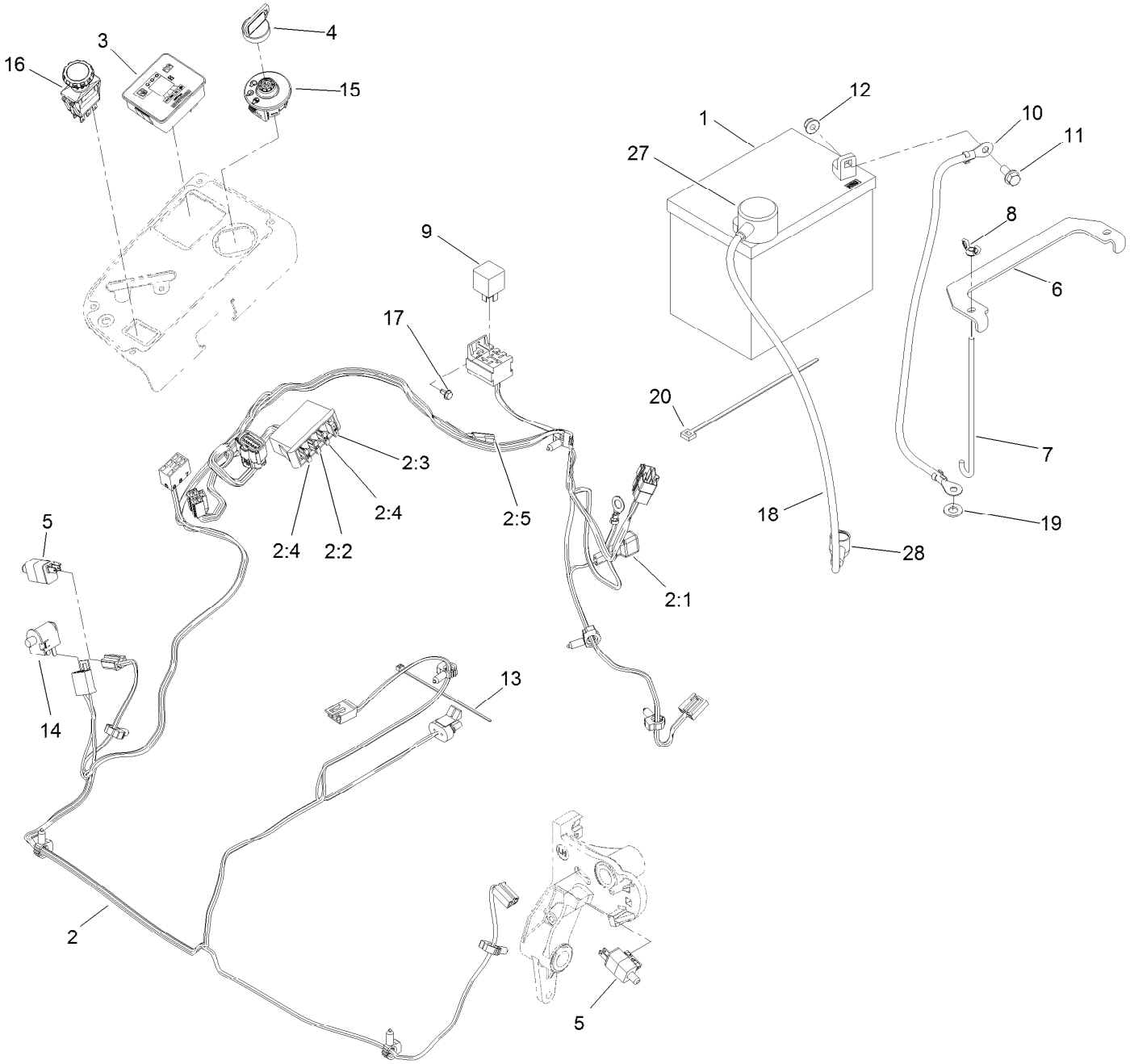

Electrical Assembly (continued)

Ref.	Part Number	Qty.	Description
1		1	Battery-Dry ●
2	116-6009	1	Harness-Wire, Main ■
2:1	103-3895	1	Diode-Tvs
2:2	218-578	1	Fuse-Blade, 10 Amp
2:3	109355	1	Fuse-Blade, 15 Amp
2:4	109102	2	Fuse-Blade, 25 Amp
2:5	116-0053	1	Cap-Plug
3	117-3882	1	Fuel/Hour Meter ASM
4	63-8360	1	Key-Ignition (W/Shield)
5	110-6765	2	Switch-Single Pole No
6	116-0042-03	1	Strap-Tie Down, Battery
7	1-633651	2	Bolt-Holddown
8	1-543792	2	Wingnut
9	1-643275	1	Relay
10	114-1218	1	Cable-Battery, Negative
11	3234-5	2	Screw-HHF
12	104-8300	2	Nut-Flange, NI
13	1-303287	3	Tie-Cable
14	82-2190	1	Switch-Bail
15	117-2221	1	Switch-Ignition
16	116-0124	1	Switch-PTO, 10A
17	104-2065	1	Screw-HWH
18	115-3864	1	Cable-Battery, Positive
19	3256-24	1	Washer-Flat
20	1-303335	1	Tie-Plastic
27	109-2407	1	Insulator-Battery
28	1-543393	1	Insulator-Solenoid

● Not serviced separately
■ Use dielectric grease on all unsealed connectors and terminals only. Do not apply in sealed connectors.

Deck Lift Assembly

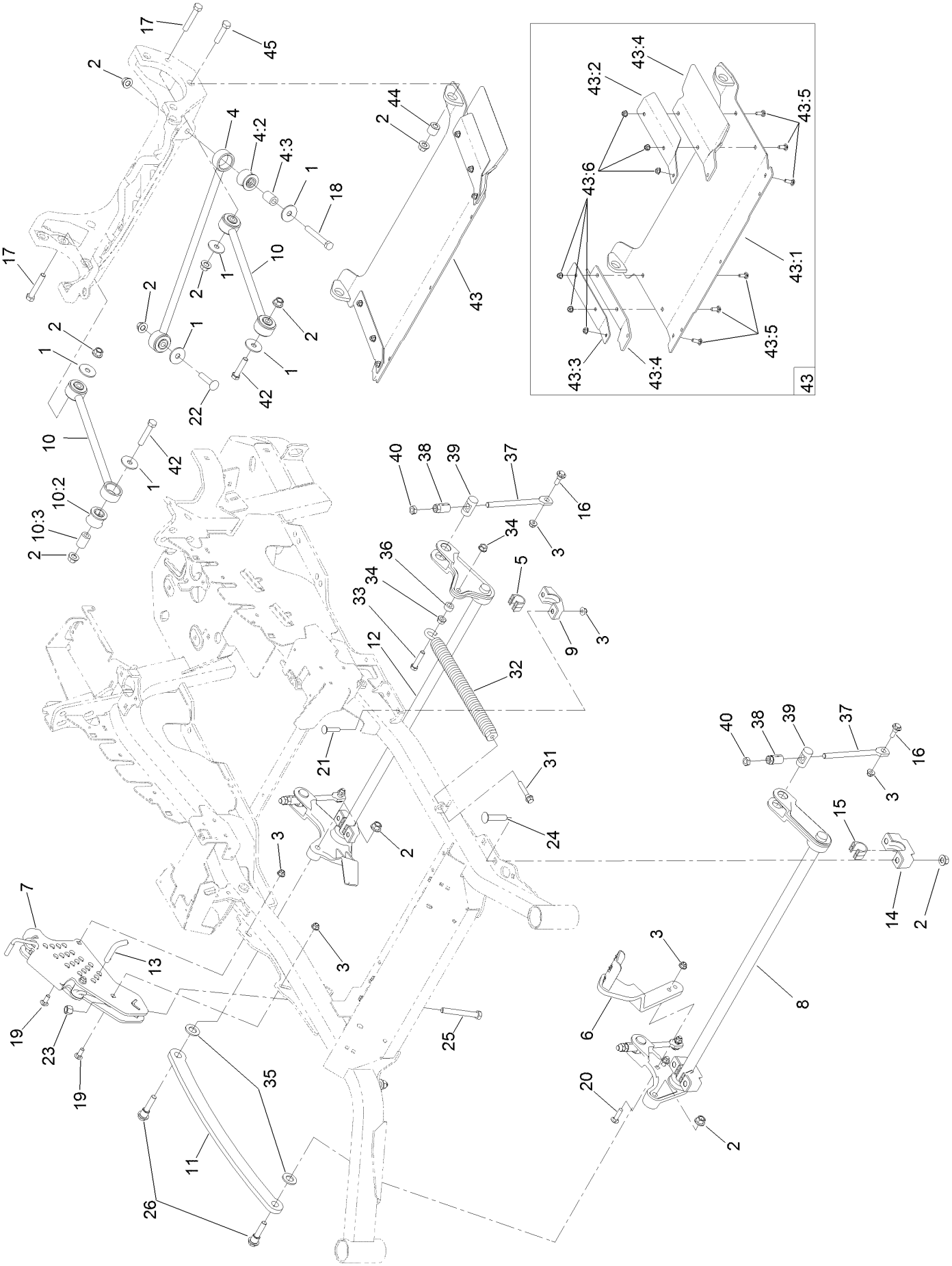

Deck Lift Assembly (continued)

Ref.	Part Number	Qty.	Description
1	86-1990	6	Washer-Thrust
2	99-5107	12	Nut-Lock
3	104-8301	12	Nut-Flange, NI
4	109-5013	1	Panhard Rod ASM
4:2	109-5009	2	Bushing-Suspension, Rubber
4:3	109-5010	2	Spacer
5	109-7173	2	Bearing-Cross Shaft, Rear
6	116-1919-01	1	Lever-Foot
7	117-3842	1	Height-Of-Cut ASM
8	126-2477-03	1	Decklift-Front
9	116-0818-03	2	Support-Cross Shaft, Rear Bearing
10	109-7952	2	Deck Strut ASM
10:2	109-5009	2	Bushing-Suspension, Rubber
10:3	109-5010	2	Spacer
11	116-0797-03	1	Link-Lift, Deck
12	116-2645-03	1	Lift-Deck, Rear
13	116-5584	1	Pin-HOC
14	109-9409	2	Support-Cross Shaft, Front Bearing
15	109-9410	2	Bearing-Cross Shaft, Front
16	109-9840	4	Screw-Shoulder, HHF
17	325-12	2	Screw-HH
18	325-17	1	Screw-HH
19	3231-2	2	Bolt-CARR
20	3231-4	2	Screw-CARR
21	3231-5	4	Screw-CARR
22	3233-34	1	Screw-CARR
23	3296-23	1	Nut-Lock, NI
24	116-1700	4	Bolt-CARR
25	116-0559	1	Bolt-TAP
26	116-2022	2	Screw-HHF, Shoulder
31	92-7674	1	Bolt-Shoulder
32	116-0000	1	Extension Spring ASM
33	109-9065	1	Screw-HH
34	32128-37	2	Nut-HF
35	3256-28	2	Washer-Flat
36	116-2695	1	Spacer
37	109-8007	4	Link-Adjuster, Deck Lift
38	109-7840	4	Adjuster-Lift, Deck
39	109-8353	4	Trunnion
40	3218-5	4	Nut-Jam
42	325-11	2	Screw-HH
43		1	Discharge Tunnel ASM ●
43:1	125-9363-03	1	Tunnel-Discharge
43:2	125-9366-03	1	Bracket-Flap, LH
43:3	125-9367-03	1	Bracket-Flap, RH
43:4	125-9368	2	Flap-Rubber
43:5	3230-16	6	Screw-CARR
43:6	104-8300	6	Nut-Flange, NI
44	126-1705	2	Bushing-Sleeve
45	325-9	2	Screw-HH

● Not serviced separately

Height-of-Cut Assembly No. 117-3842

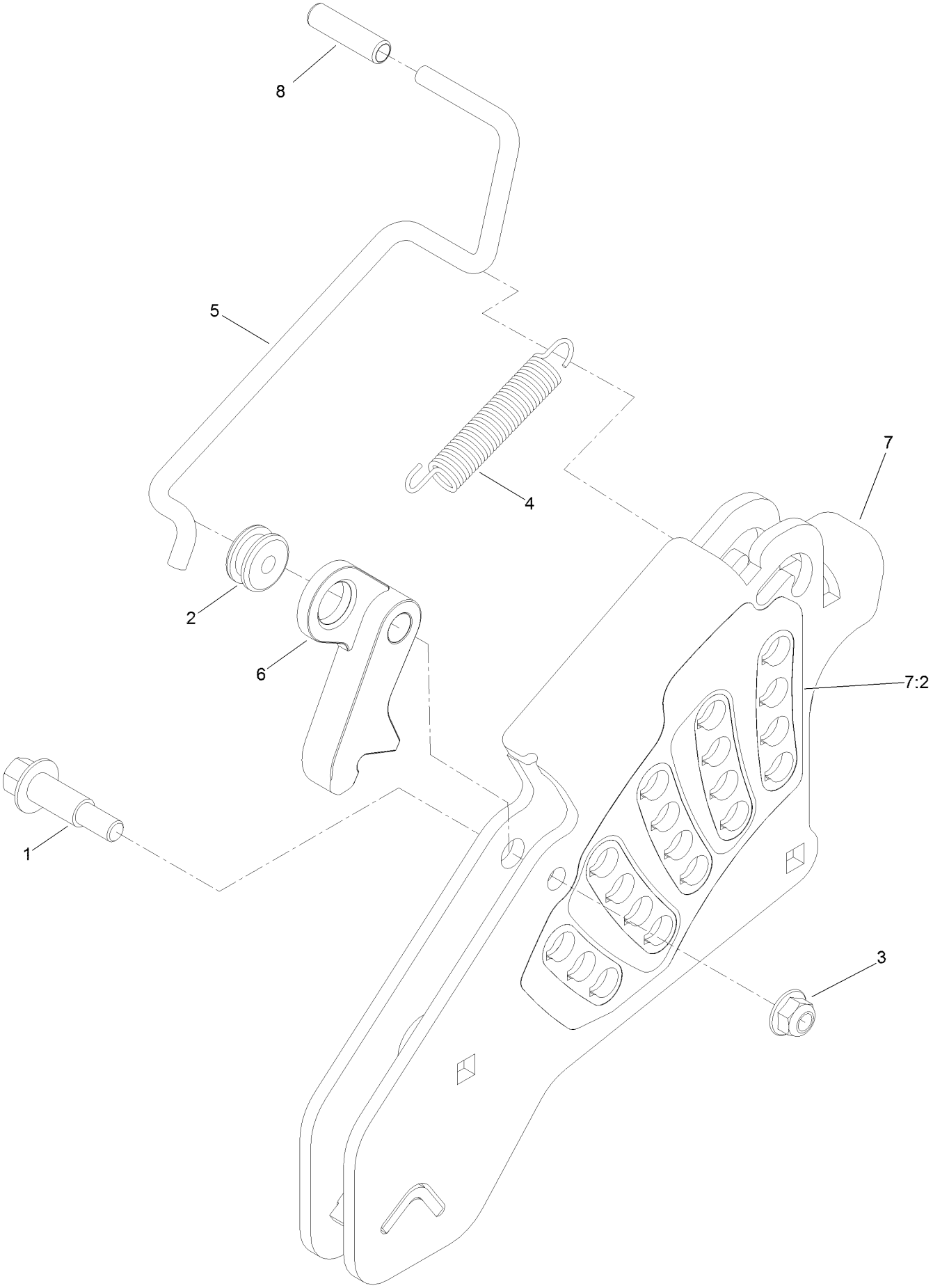

Height-of-Cut Assembly No. 117-3842 (continued)

Ref.	Part Number	Qty.	Description
1	62-1330	1	Bolt-Shoulder
2	109-7130	1	Grommet
3	104-8301	1	Nut-Flange, NI
4	109-7124	1	Spring-Extension
5	109-7128	1	Rod-Lock, Transport
6	116-0118	1	Pawl-Transport, HOC
7	117-3837	1	Plate-Height Adjuster
7:2	114-4470	1	Decal-HOC
8	109-8250	1	Grip-Lever

Engine, Muffler and Clutch Assembly

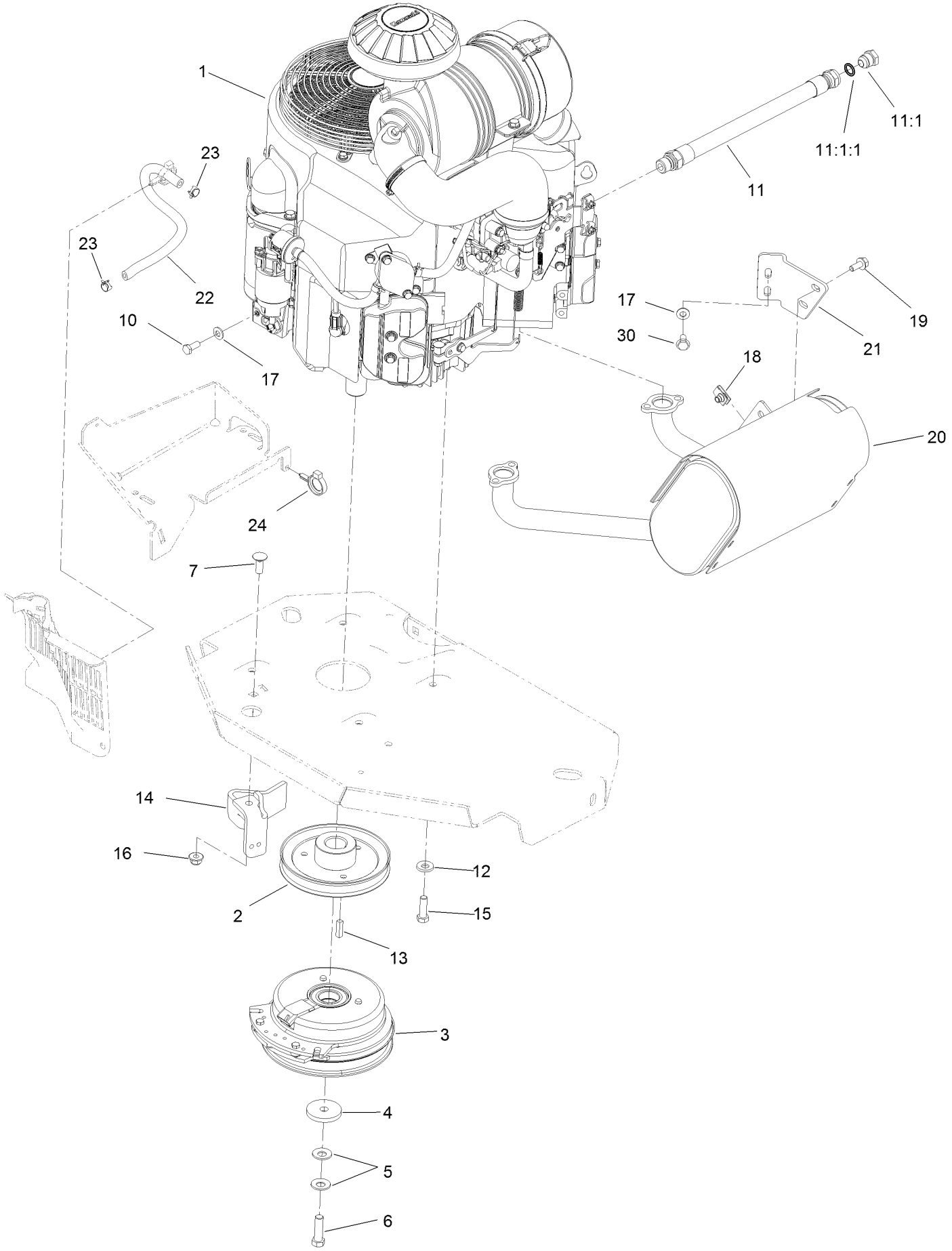

Engine, Muffler and Clutch Assembly (continued)

Ref.	Part Number	Qty.	Description
1		1	Engine-Kawasaki, Fx801V-S04-R ●■
2	109-9905	1	Sheave
3	116-1620	1	Clutch Kit
4	109-6919	1	Washer-Clutch
5	1-603610	2	Washer-Spring
6	109-9761	1	Screw-HH ▲
7	3231-22	1	Screw-CARR
10	33114-020	1	Screw-HH
11	116-4924	1	Engine Oil Drain Hose ASM
11:1	353-508	1	Plug-HH
11:1:1	237-42	1	O-Ring
12	98-5975	4	Washer-Belleville
13	1-807259	1	Key
14	116-2612-01	1	Clutch-Anchor
15	323-7	4	Screw-HH
16	104-8301	1	Nut-Flange, NI
17	1-303334	3	Washer-Spring
18	94-2413	2	U-Nut
19	3234-5	2	Screw-HHF
20	116-1712	1	Muffler
21	116-0203	1	Bracket-Muffler
22	109-0296	1	Hose-Fuel
23	2412-98	2	Clamp-Hose
24	105-1853	1	Clamp-Hose
30	95-4184	2	Screw-HHF

● Not serviced separately
▲ Use Pro-Lock, Nut Type (P/N 1-840022, .5ml tube) on threads.
■ Obtain parts from www.kawpowerepc.com

Deck Assembly

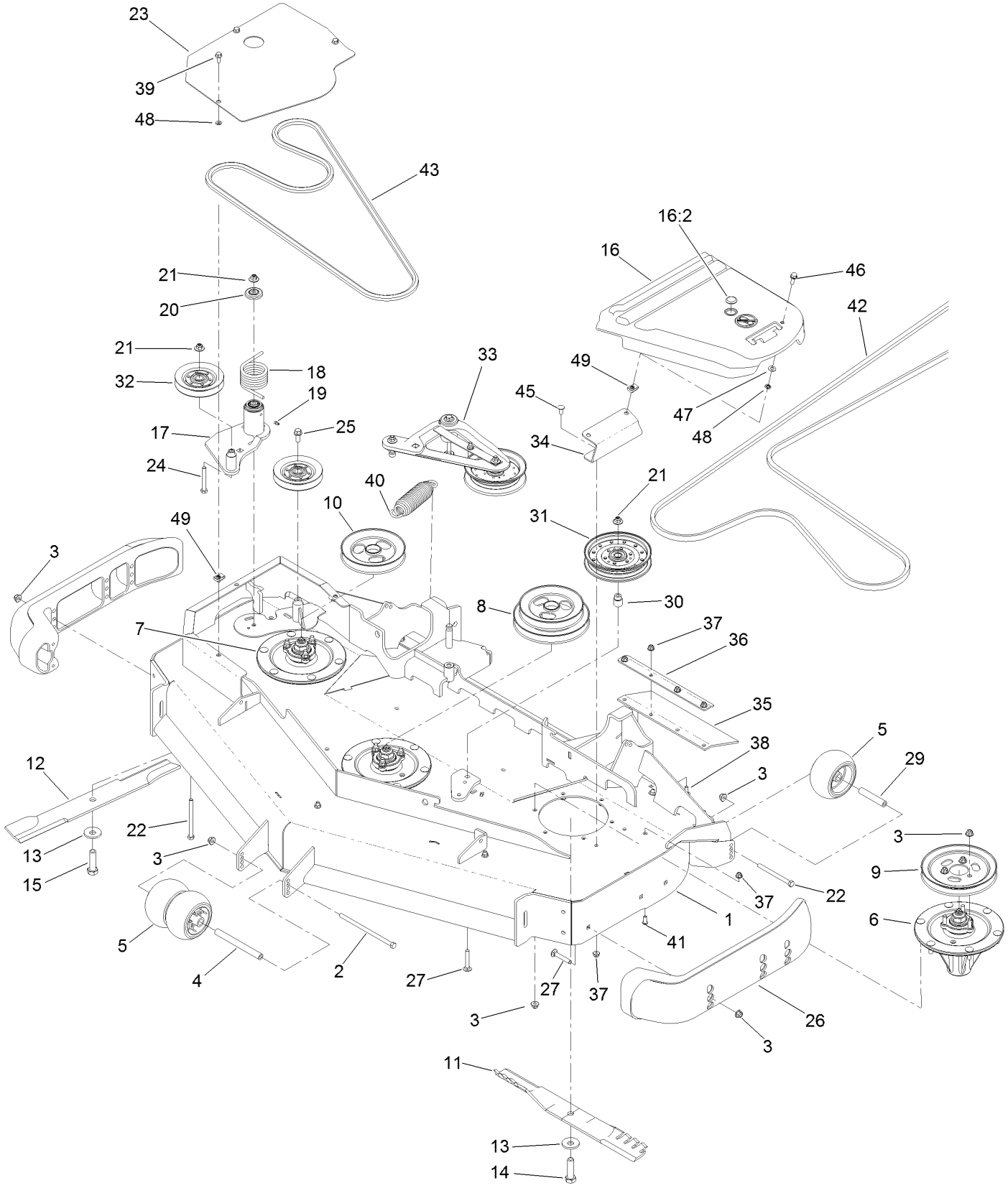

Deck Assembly (continued)

Ref.	Part Number	Qty.	Description
1	125-9391	1	Deck Decal ASM
2	108-5388	1	Screw-HH
3	104-8301	37	Nut-Flange, NI
4	98-5967	1	Spacer-Wheel
5	1-603299	4	Roller-Scalp, Anti
6	119-8560	2	Spindle ASM
7	125-9324	1	LH Spindle ASM
8	125-9317	1	Pulley
9	105-7734	1	Pulley
10	125-9316	1	Pulley
11	105-8777-03	2	Blade-Atomic, 20.5In
12	125-9329-01	1	Blade-Rotary, 20.5In Low Flow
13	103-0865	3	Washer-Blade Bolt, Heavy
14	51-4060	2	Screw-Blade
15	125-9326	1	Screw-Blade, LH
16	117-7816	1	LH Belt Cover ASM
16:2	117-3824	1	Plug-Plastic
17	127-6659	1	Deck Idler ASM
18	108-1921	1	Spring-Torsion
19	302-19	1	Fitting-Grease
20	103-2916	1	Guard-Top
21	109-6658	3	Nut-Flange, NI
22	323-23	3	Screw-HH
23	127-6660-03	1	Plate-Belt Cover, RH

Ref.	Part Number	Qty.	Description
24	323-13	1	Screw-HH
25	3234-11	1	Screw-HHF
26	112-1479	2	Skid-Bumper, Deck
27	3231-7	7	Screw-CARR
29	98-7912	2	Tube-Spanner
30	1-633456	1	Bushing, Idler
31	116-4670	1	Pulley-Idler, Flat
32	126-1478	2	Sheave
33	126-1720	1	Deck Idler ASM
34	114-5882-01	1	Bracket-Cover, Belt
35	116-8191	2	Guard-Tire
36	126-0413-01	2	Support-Outer Flap
37	104-8300	16	Nut-Flange, NI
38	3230-16	8	Screw-CARR
39	3234-47	3	Screw-HHF
40	116-6317	1	Spring-Extension
41	3274-55	6	Screw-HSBH
42	125-9371	1	Belt-V
43	116-8187	1	Belt-Hex
45	3230-23	2	Screw-CARR
46	3234-29	1	Screw-HHF
47	73-0041	1	Washer-Thrust
48	117-2749	4	Nut-Push
49	94-2413	4	U-Nut

Deck Decal Assembly No. 125-9391

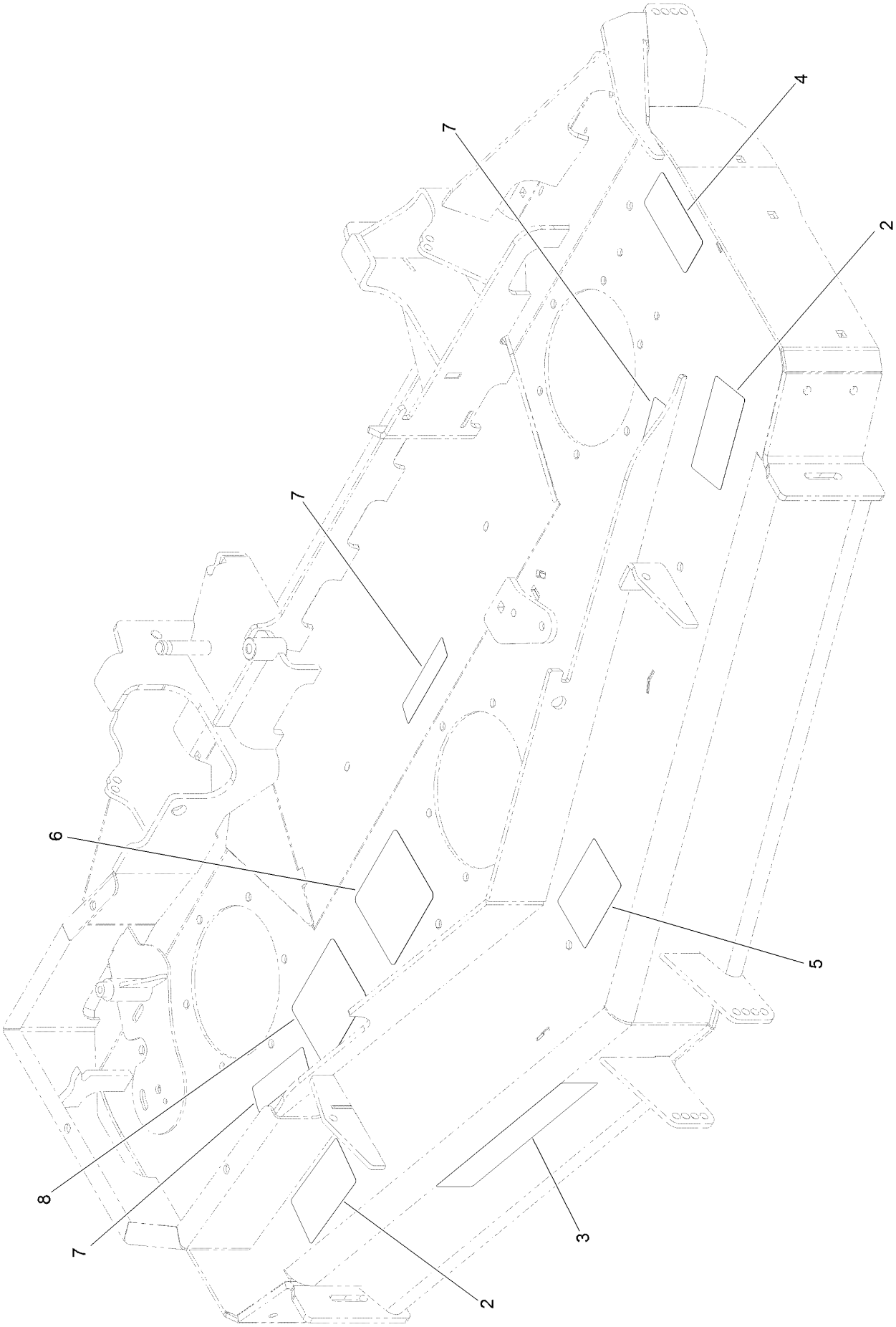

Deck Decal Assembly No. 125-9391 (continued)

Ref.	Part Number	Qty.	Description
2	117-3848	2	Decal-Danger
3	107-1619	1	Decal
4	93-7818	1	Decal-Torque, Blade Bolt
5	127-6651	1	Decal-Anti Scalp
6	125-9384	1	Decal-Routing, Deck Belt
7	112-9028	3	Decal-Cover Missing
8	127-6662	1	Decal-Spindle, Counter Rotating

Spindle Assembly No. 119-8560

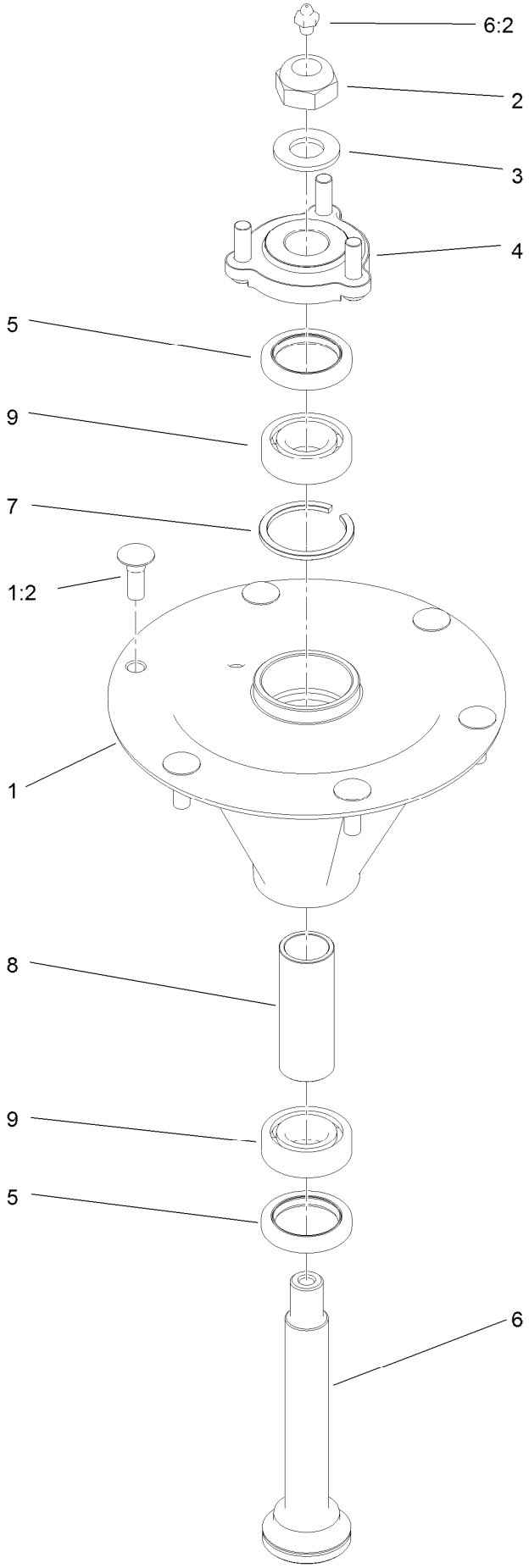

Spindle Assembly No. 119-8560 (continued)

Ref.	Part Number	Qty.	Description
1		1	Spindle Housing And Studs ASM ●
1:2	114-8195	6	Bolt-Ribbed Neck
2	3296-67	1	Nut-Lock, NI
3	92-5836	1	Washer
4	117-6172	1	Spindle Hub ASM
5	253-133	2	Seal-Oil
6	119-8527	1	Shaft-Spindle
6:2	302-2	1	Fitting-Grease
7	119-8532	1	Snap Ring
8	117-6184	1	Spacer
9	119-8558	2	Bearing-Noseal

● Not serviced separately

Spindle Assembly No. 125-9324

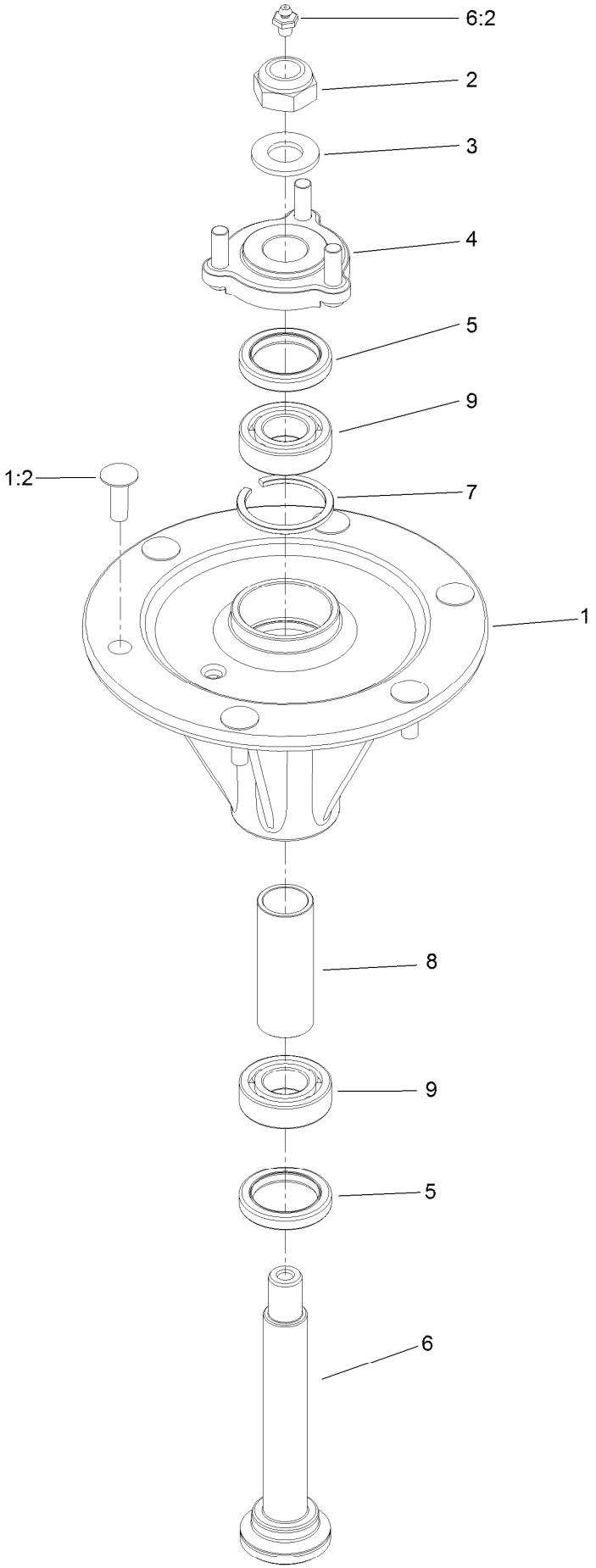

Spindle Assembly No. 125-9324 (continued)

Ref.	Part Number	Qty.	Description
1		1	Spindle Housing And Studs ASM ●
1:2	114-8195	6	Bolt-Ribbed Neck
2	125-9325	1	Nut-Lock,NI LH
3	92-5836	1	Washer
4	117-6172	1	Spindle Hub ASM
5	253-133	2	Seal-Oil
6	125-9322	1	Shaft-Spindle
6:2	302-2	1	Fitting-Grease
7	119-8532	1	Snap Ring
8	117-6184	1	Spacer
9	119-8558	2	Bearing-Noseal

● Not serviced separately

Idler Assembly No. 126-0853

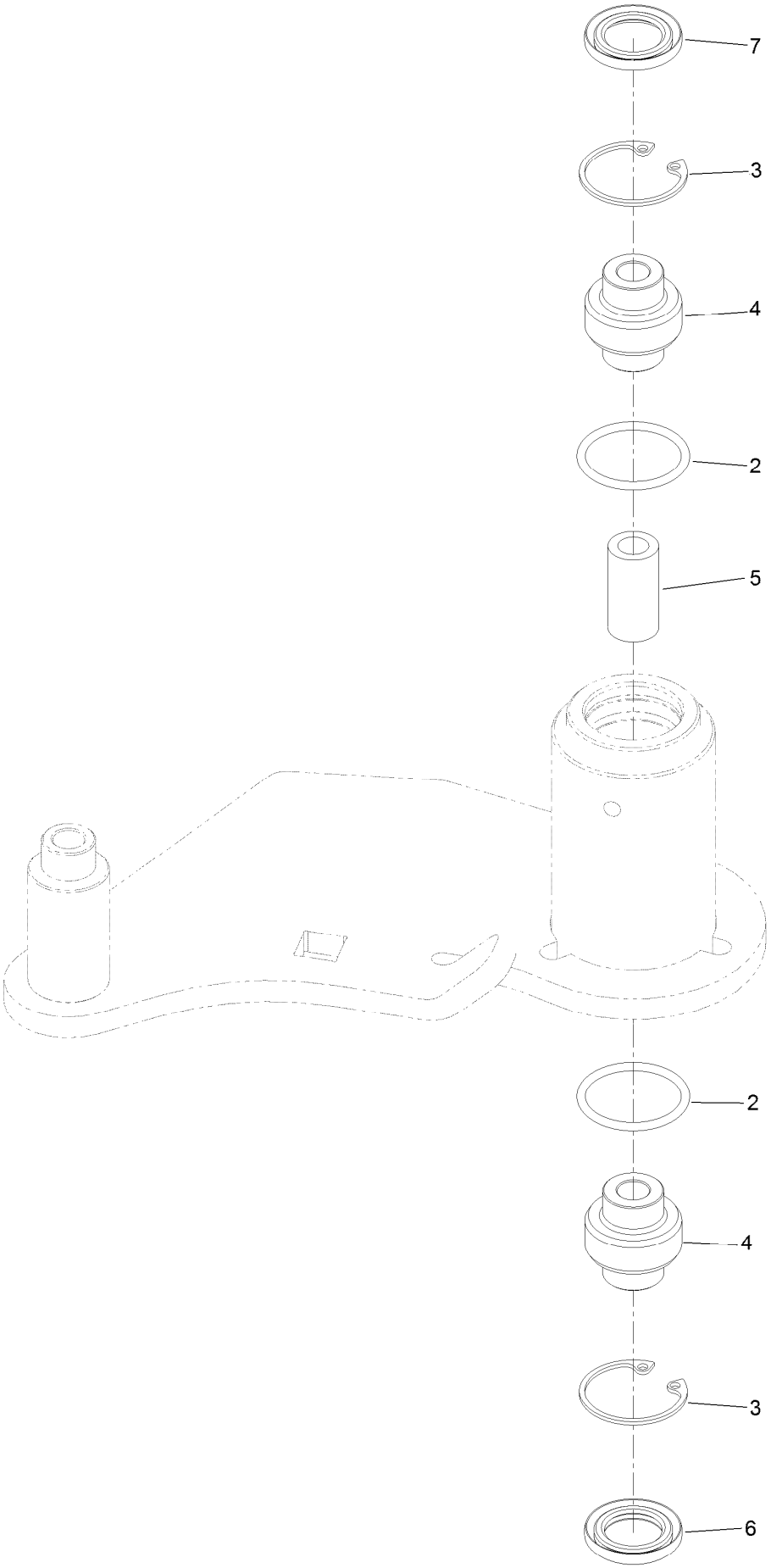

Idler Assembly No. 126-0853 (continued)

Ref.	Part Number	Qty.	Description
2	106-7159	2	O-Ring
3	32120-10	2	Ring-Snap
4	103-3504	2	Bearing-Spherical
5	108-6544	1	Spacer
6	103-3505	1	Seal-Double Lip
7	103-3506	1	Seal-Single Lip

Deck Idler Assembly No. 126-1720

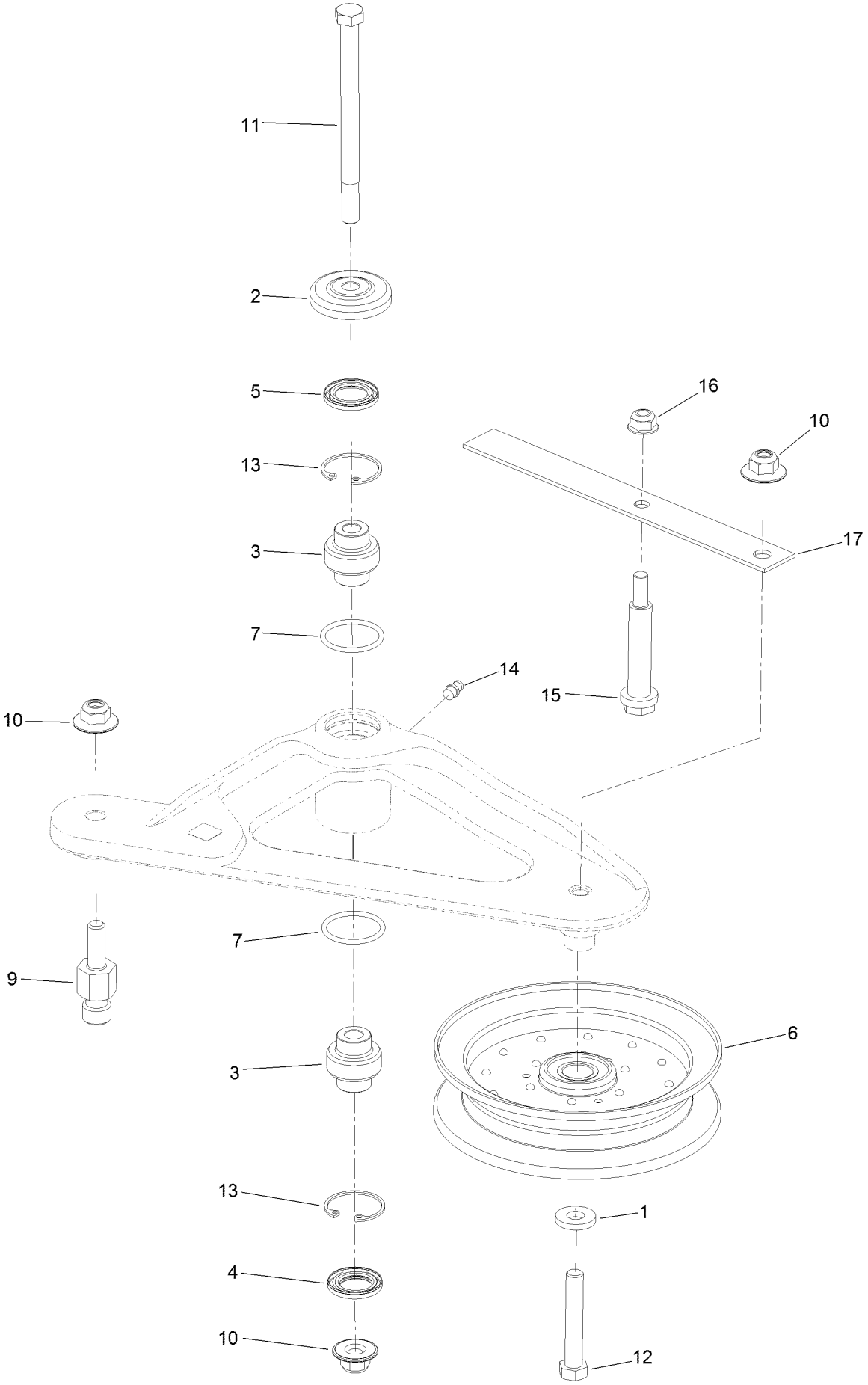

Deck Idler Assembly No. 126-1720 (continued)

Ref.	Part Number	Qty.	Description
1	43-0940	1	Spacer
2	103-2916	1	Guard-Top
3	103-3504	2	Bearing-Spherical
4	103-3505	1	Seal-Double Lip
5	103-3506	1	Seal-Single Lip
6	116-4668	1	Idler-Pulley, Flanged
7	106-7159	2	O-Ring
9	126-0423	1	Pin-Spring, Anchor
10	109-6658	2	Nut-Flange, NI
11	109-7409	1	Screw-Shoulder, HH
12	104-3396	1	Screw-HH
13	32120-10	2	Ring-Snap
14	302-19	1	Fitting-Grease
15	88-4590	1	Bolt-Shoulder
16	104-8300	1	Nut-Flange, NI
17	126-1704	1	Spring-Belt Guide Leaf

Attachments and Accessories

For 74942TE Z Master Professional 6000 Series Riding Mower with 152cm TURBO FORCE Rear Discharge Mower

Product Name	Model/Part
Blade-Atomic, 20.5in	105-8777-03
6 Pack-Blade, 20.5in Atomic	108-1115
Hitch Kit	109-9487
Hypr-Oil 500 (quart)	114-4713
Hypr-Oil 500 (gallon)	114-4714
Hypr-Oil 500-5 (5 gallon)	114-4715
Bimini Folding Shade Assembly	115-4510
Light Kit	116-1154
Deluxe Seat Kit	121-7595
Seat Tilt Frame And Iso Mount Kit	121-7596
Baffle Kit	125-9305
Counter Rotating Rotary Blade 20.5in Low Flow	125-9329-01
Deck Skid Bumper	126-0854
Anti-Scalp and Wear Bar Kit	127-6650
Jack Mount Kit	127-6665
Jack Kit	127-6666
Toro Deluxe Rider Cover	490-7319
Spark Arrestor Screen	75-6880
Filter Minder Gauge	99-4664
Trash Holder Kit	TC26

Notes:

TORO®

Count on it.