Form No. 3381-401 Rev A

50cm Mulching/Side Discharge/Rear Bagging Lawn Mower

Model No. 29643—Serial No. 314000001 and Up

Operator's Manual

Introduction

This rotary-blade, walk-behind lawn mower is intended to be used by residential homeowners. It is designed primarily for cutting grass on well-maintained lawns on residential properties. It is not designed for cutting brush or for agricultural uses.

Read this information carefully to learn how to operate and maintain your product properly and to avoid injury and product damage. You are responsible for operating the product properly and safely.

You may contact Toro directly at www.Toro.com for product and accessory information, help finding a dealer, or to register your product.

Whenever you need service, genuine Toro parts, or additional information, contact an Authorized Service Dealer or Toro Customer Service and have the model and serial numbers of your product ready. Figure 1 identifies the location of the model and serial numbers on the product. Write the numbers in the space provided.

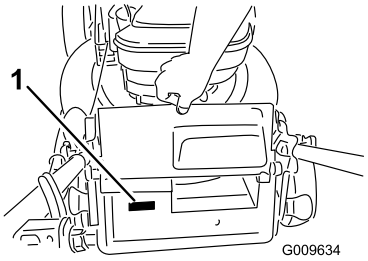

Figure 1

1. Model and serial number plate

Model No. _____

Serial No. _____

This manual identifies potential hazards and has safety messages identified by the safety alert symbol (Figure 2), which signals a hazard that may cause serious injury or death if you do not follow the recommended precautions.



Figure 2

1. Safety alert symbol

This manual uses two words to highlight information. **Important** calls attention to special mechanical information and **Note** emphasizes general information worthy of special attention.

This product complies with all relevant European directives. For details, see the separate product specific Declaration of Conformity (DOC) sheet.

For models with stated engine horsepower, the gross horsepower of the engine was laboratory rated by the engine manufacturer in accordance with SAE J1940. As configured to meet safety, emission, and operating requirements, the actual engine horsepower on this class of lawn mower will be significantly lower.

Do not tamper with the engine controls or alter the governor speed; doing so may create an unsafe condition resulting in personal injury.

Contents

Introduction 1
- General Lawn Mower Safety 2
- Sound Pressure 3
- Sound Power 3
- Hand-Arm Vibration 3
- Safety and Instructional Decals 4

Setup 5
- 1 Unfolding the Handle 5
- 2 Installing the Recoil-starter Rope in the Rope Guide 5
- 3 Filling the Engine with Oil 5
- 4 Charging the Battery 6
- 5 Installing the Fuse 6

Product Overview 7
- Specifications 7

Operation 7
- Attachments/Accessories 7
- Filling the Fuel Tank 7
- Checking the Engine Oil Level 8
- Adjusting the Cutting Height 8

© 2013—The Toro® Company
8111 Lyndale Avenue South
Bloomington, MN 55420

Register at www.Toro.com.

CE

Original Instructions (EN)
Printed in the USA
All Rights Reserved

3381-401 A

Starting the Engine 8
Using the Self-propel Drive..... 9
Stopping the Engine 9
Mulching the Clippings 9
Bagging the Clippings 9
Discharging the Clippings.....10
Operating Tips 10
Maintenance 12
Recommended Maintenance Schedule(s) 12
Preparing for Maintenance.....12
Servicing the Air Cleaner 12
Changing the Engine Oil 13
Charging the Battery 13
Replacing the Fuse.....14
Replacing the Blade 14
Adjusting the Self-propel Drive Cable.....15
Cleaning the Mower.....15
Storage 16
Preparing the Mower for Storage 16
Folding the Handle 16
Removing the Mower from Storage.....16
Troubleshooting 17

Safety

Improperly using or maintaining the mower can result in injury. To reduce the potential for injury, comply with these safety instructions.

Toro designed and tested this mower for reasonably safe service; however, failure to comply with the following instructions may result in personal injury.

To ensure maximum safety, best performance, and to gain knowledge of the product, it is essential that you and any other operator of the mower read and understand the contents of this manual before the engine is ever started. Pay particular attention to the safety alert symbol (Figure 2) which means Caution, Warning, or Danger—"personal safety instruction." Read and understand the instruction because it has to do with safety. Failure to comply with the instruction may result in personal injury.

General Lawn Mower Safety

The following instructions have been adapted from EN 836.

This cutting machine is capable of amputating hands and feet and throwing objects. Failure to observe the following safety instructions could result in serious injury or death.

Training

- Read the instructions carefully. Be familiar with the controls and the proper use of the equipment.
- Never allow children or people unfamiliar with these instructions to use the mower. Local regulations can restrict the age of the operator.
- Keep in mind that the operator or user is responsible for accidents or hazards occurring to other people or their property.
- Understand explanations for all pictograms used on the mower or in the instructions.

Gasoline

⚠ WARNING

Gasoline is highly flammable. Take the following precautions.

- **Store fuel in containers specifically designed for this purpose.**
- **Refuel outdoors only and do not smoke while refueling.**
- **Add fuel before starting the engine. Never remove the cap of the fuel tank or add gasoline while the engine is running or when the engine is hot.**
- **If gasoline is spilled, do not attempt to start the engine but move the machine away from the area of spillage and avoid creating any source of ignition until gasoline vapors have dissipated.**
- **Replace all fuel tank and container caps securely.**

Preparation

- While mowing, always wear substantial footwear and long trousers. Do not operate the machine when barefoot or wearing open sandals.
- Thoroughly inspect the area where the machine is to be used, and remove all stones, sticks, wires, bones, and other foreign objects.
- Before using, always visually inspect to see that guards and safety devices, such as deflectors and/or grass catchers, are in place and working correctly.
- Before using, always visually inspect to see that the blades, blade bolts, and cutter assembly are not worn or damaged. Replace worn or damaged blades and bolts in sets to preserve balance.

Starting

Start the engine carefully, according to instructions and with feet well away from the blade(s) and not in front of the discharge chute.

Operation

- Never mow while people, especially children, or pets are nearby.
- Mow only in daylight or in good artificial light.

- Stay alert for holes in the terrain and other hidden hazards.
- Do not put hands or feet near or under rotating parts. Keep clear of the discharge opening at all times.
- Never pick up or carry the machine while the engine is running.
- Use extreme caution when reversing or pulling the mower towards you.
- Walk; never run.
- Slopes:
  - Do not mow on excessively steep slopes.
  - Exercise extreme caution when on slopes.
  - Mow across the face of slopes, never up and down, and exercise extreme caution when changing direction on slopes.
  - Always be sure of your footing on slopes.
- Reduce speed on slopes and in sharp turns to prevent overturning or loss of control.
- Stop the blade if the machine has to be tilted for transportation when crossing surfaces other than grass and when transporting the machine.
- Do not operate the engine in a confined space where dangerous carbon monoxide fumes can collect.
- Stop the engine
  - whenever you leave the machine.
  - before refueling.
  - before removing the grass catcher.
  - before making height adjustment unless adjustment can be made from the operator's position.
- Stop the engine and disconnect the spark plug wire
  - before clearing blockages or unclogging chute.
  - before checking, cleaning, or servicing the machine.
  - after striking a foreign object, inspect the machine for damage and make repairs before restarting and operating the machine.
  - if the machine starts to vibrate abnormally (check immediately).
- Lightning can cause severe injury or death. If you see lightning or hear thunder in the area, do not operate the machine; seek shelter.
- Watch out for traffic when crossing or near roadways.

Maintenance and Storage

- Keep all nuts, bolts, and screws tight to be sure the machine is in safe working condition.
- Do not use pressure cleaning equipment on the machine.
- Never store the machine with gasoline in the tank and inside a building where fumes can reach an open flame or spark.
- Allow the engine to cool before storing in any enclosure.
- To reduce the risk of fire, keep the engine, silencer, battery compartment, and gasoline storage area free of grass, leaves, or excessive grease.
- Check grass catcher components and the discharge guard frequently and replace with manufacturer's recommended parts, when necessary.
- Replace worn or damaged parts for safety.
- Replace faulty silencers.
- If the fuel tank has to be drained, do this outdoors.
- Do not change the engine governor settings or overspeed the engine. Operating an engine at excessive speed can increase the hazard of personal injury.
- On multibladed machines, use caution, as rotating one blade may cause others to rotate.
- Be careful during adjustment of the mower to prevent entrapment of the fingers between moving blades and fixed parts of the mower.
- **To ensure the best performance and safety, purchase only genuine Toro replacement parts and accessories. Do not use *will fit* parts and accessories; they may cause a safety hazard.**

Sound Pressure

This machine has a sound pressure level at the operator's ear of 88 dBA, which includes an Uncertainty Value (K) of 1 dBA. The sound pressure level was determined according to the procedures outlined in EN 836.

Sound Power

This machine has a guaranteed sound power level of 98 dBA, which includes an Uncertainty Value (K) of 1 dBA. The sound power level was determined according to the procedures outlined in ISO 11094.

Hand-Arm Vibration

Measured vibration level for the left hand = 3.9 m/s^2

Measured vibration level for the right hand = 4.4 m/s^2

Uncertainty Value (K) = 2.2 m/s^2.

The measured values were determined according to the procedures outlined in EN 836.

Safety and Instructional Decals

Important: **Safety and instruction decals are located near areas of potential danger. Replace damaged decals.**

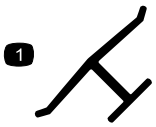

Manufacturer's Mark

1. Indicates the blade is identified as a part from the original machine manufacturer.

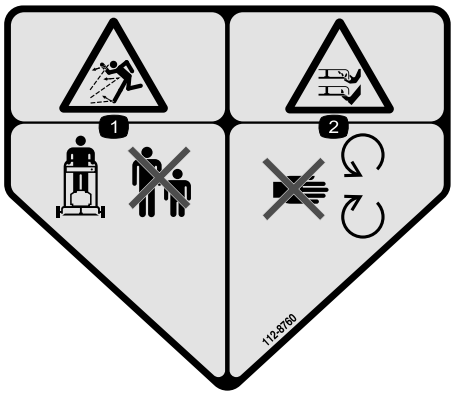

112-8760

1. Thrown object hazard—keep bystanders a safe distance from the machine.
2. Cutting/dismemberment of hand or foot—stay away from moving parts.

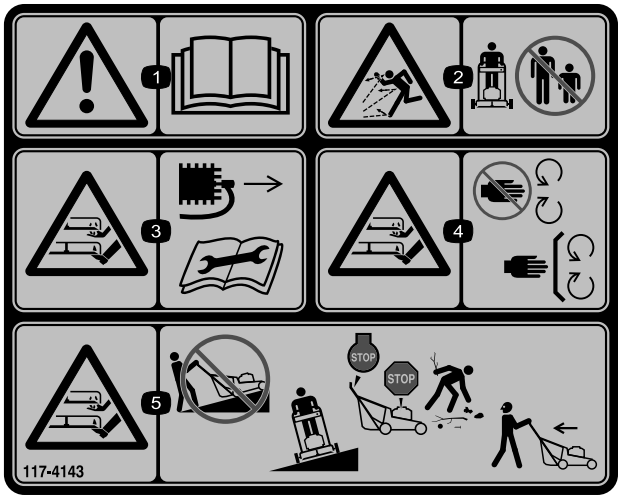

117-4143

1. Warning—read the *Operator's Manual*.
2. Thrown object hazard—keep bystanders a safe distance from the machine.
3. Cutting/dismemberment hazard of hand or foot, mower blade—disconnect the spark plug wire and read the instructions before servicing or performing maintenance.
4. Cutting/dismemberment hazard of hand or foot, mower blade—stay away from moving parts and keep all guards and shields in place.
5. Cutting/dismemberment hazard of hand or foot, mower blade—do not mow up and down slopes, only mow across; stop the mower and engine, pick up debris before operating; look behind and down when reversing.

Setup

Important: Remove and discard the protective plastic sheet that covers the engine.

1

Unfolding the Handle

No Parts Required

Procedure

⚠ WARNING

Folding or unfolding the handle improperly can damage the cables, causing an unsafe operating condition.

- **Do not damage the cables when folding or unfolding the handle.**
- **If a cable is damaged, contact an Authorized Service Dealer.**

1. Remove the handle knobs from the mower housing (Figure 3).

   Important: Route the cables to the outside of the handle as you install the handle.

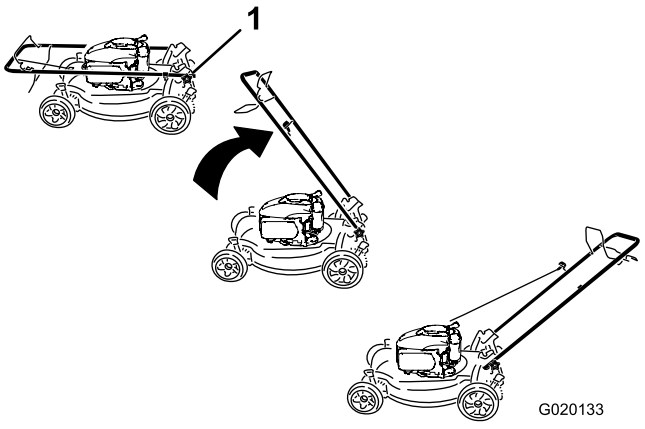

Figure 3

1. Handle knob (2)

2. Move the handle to the operating position.
3. Install and tighten the handle knobs that you removed in step 1 (Figure 3).

2

Installing the Recoil-starter Rope in the Rope Guide

No Parts Required

Procedure

Important: To start the engine safely and easily whenever you use the machine, install the recoil-starter rope in the rope guide.

Hold the blade-control bar to the upper handle and pull the recoil-starter rope through the rope guide on the handle (Figure 4).

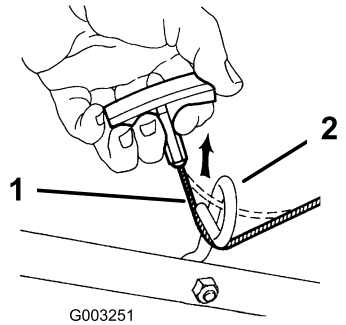

Figure 4

1. Recoil-starter rope
2. Rope guide

3

Filling the Engine with Oil

No Parts Required

Procedure

Important: The machine does not come with oil in the engine.

1. Remove the dipstick (Figure 5).

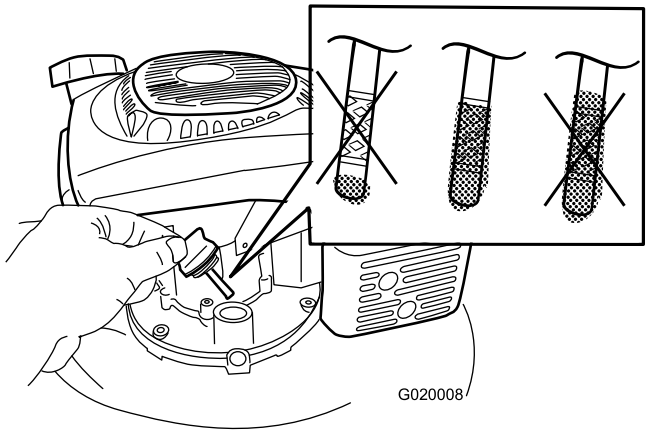

Figure 5

2. **Slowly** pour oil into the oil-fill hole until the oil level reaches the Full line on the dipstick (Figure 5). **Do not overfill.** (Max. fill: 0.59 l (20 oz.), type: 10W-30 or SAE 30 detergent oil with an API service classification of SJ or higher.)

   Note: Each time you check the oil level, remove the dipstick and wipe it clean, insert it into the oil filler neck (but **do not** screw it in), then remove it again and check the level (Figure 5).

   Note: If you overfill the engine, pour some oil out of it; refer to Changing the Engine Oil (page 13).

3. Install the dipstick securely.

   Important: ***Change the engine oil after the first 5 operating hours*; change it every 50 hours or yearly thereafter, whichever comes first. Refer to Changing the Engine Oil (page 13).**

4

Charging the Battery

No Parts Required

Procedure

Refer to Charging the Battery (page 13).

5

Installing the Fuse

No Parts Required

Procedure

Refer to Replacing the Fuse (page 14).

Product Overview

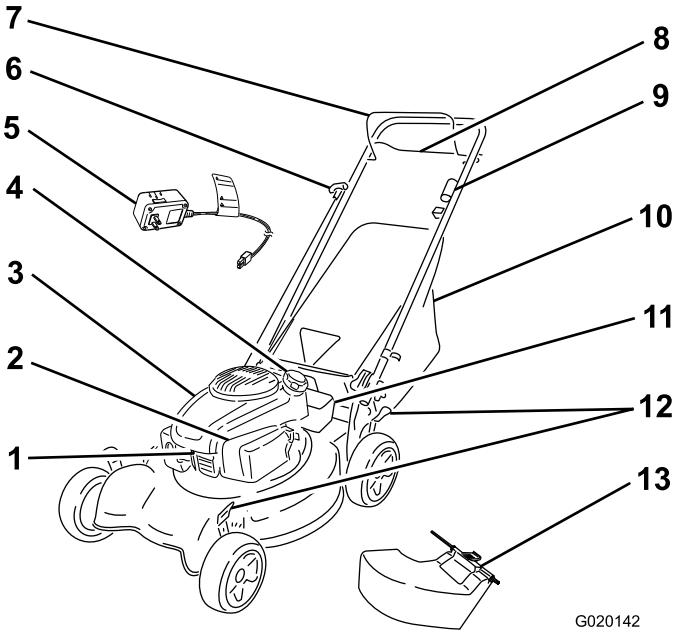

Figure 6

1. Spark plug
2. Air cleaner
3. Oil fill/Dipstick
4. Fuel tank cap
5. Battery charger
6. Recoil start handle
7. Blade control bar
8. Self-propel drive bar
9. Ignition key
10. Grass bag
11. Battery
12. Cutting height levers (4)
13. Rear discharge deflector

Specifications

Model	Weight	Length	Width	Height
29643	33 kg (73 lbs)	145 cm (57 inches)	56 cm (22 inches)	99 cm (39 inches)

Operation

Attachments/Accessories

A selection of Toro approved attachments and accessories is available for use with the machine to enhance and expand its capabilities. Contact your Authorized Service Dealer or Distributor or go to www.Toro.com for a list of all approved attachments and accessories.

Filling the Fuel Tank

Recommended Fuel:

- For best results, use only clean, fresh (less than 30 days old), unleaded gasoline with an octane rating of 87 or higher ((R+M)/2 rating method).
- **Ethanol**: Gasoline with up to 10% ethanol (gasohol) or 15% MTBE (methyl tertiary butyl ether) by volume is acceptable. Ethanol and MTBE are not the same. Gasoline with 15% ethanol (E15) by volume is not approved for use. **Never use gasoline that contains more than 10% ethanol by volume**, such as E15 (contains 15% ethanol), E20 (contains 20% ethanol), or E85 (contains up to 85% ethanol). Using unapproved gasoline may cause performance problems and/or engine damage which may not be covered under warranty.
- **Do not** use gasoline containing methanol.
- **Do not** store fuel either in the fuel tank or fuel containers over the winter unless a fuel stabilizer is used.
- **Do not** add oil to gasoline.

Important: To reduce starting problems, add fuel stabilizer to the fuel all season, mixing it with gasoline less than 30 days old; run the machine dry before storing it for more than 30 days.

Do not use fuel additives other than a fuel stabilizer/conditioner. Do not use fuel stabilizers with an alcohol base such as ethanol, methanol, or isopropanol.

⚠ DANGER

Gasoline is extremely flammable and explosive. A fire or explosion from gasoline can burn you and others.

- **To prevent a static charge from igniting the gasoline, place the container and/or machine directly on the ground before filling, not in a vehicle or on an object.**
- **Fill the tank outdoors when the engine is cold. Wipe up spills.**
- **Do not handle gasoline when smoking or around an open flame or sparks.**
- **Store gasoline in an approved fuel container, out of the reach of children.**

1. Clean around the fuel-tank cap, and remove the cap from the tank (Figure 7).

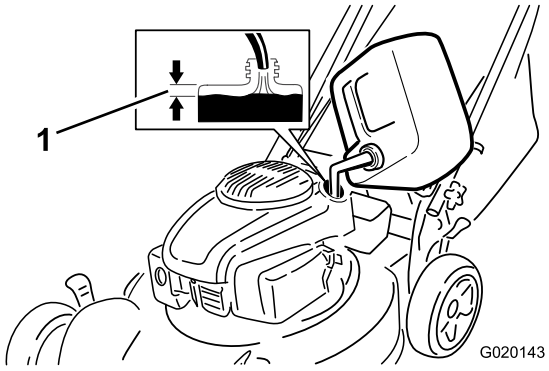

Figure 7

1. 1 cm (1/2 in)

2. Fill the fuel tank, leaving at least 1 cm (1/2 inch) from the bottom of the neck empty to allow the gasoline room to expand.
3. Install the fuel tank cap and tighten it securely by hand.

Checking the Engine Oil Level

Service Interval: Before each use or daily

1. Remove the dipstick, wipe it clean, and insert it into the oil filler neck, but **do not** screw it in (Figure 8).

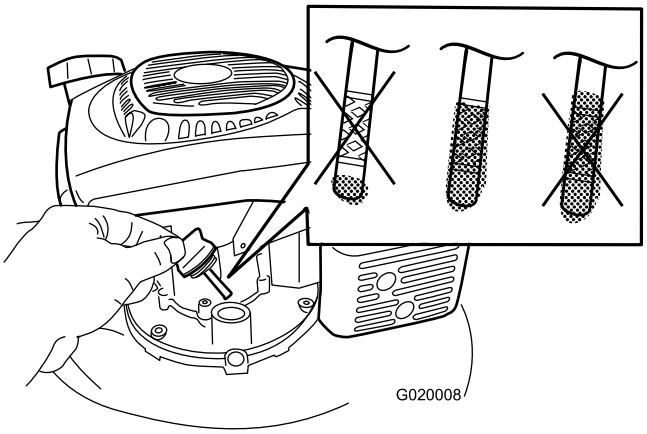

Figure 8

2. Remove the dipstick and check the oil level (Figure 8). If the oil level is below the Add mark on the dipstick, **slowly** pour oil into the oil-fill hole to raise the oil level to the Full mark on the dipstick. **Do not overfill.** (Max. fill: 0.65 l (22 oz.), type: 10W-30 or SAE 30 detergent oil with an API service classification of SJ or higher.)

   Note: If you overfill the engine, pour some oil out of it as directed; refer to Changing the Engine Oil (page 13).
3. Install the dipstick securely.

Adjusting the Cutting Height

⚠ WARNING

Adjusting the cutting height may bring you into contact with the moving blade, causing serious injury.

- **Stop the engine and wait for all moving parts to stop.**
- **Do not put your fingers under the housing when adjusting the cutting height.**

⚠ CAUTION

If the engine has been running, the muffler will be hot and can severely burn you.

Keep away from the hot muffler.

Adjust the cutting height as desired. Set all four wheels to the same height.

Note: To raise the mower, move all the cutting height levers forward; to lower the mower, move the all the cutting height levers rearward (Figure 9).

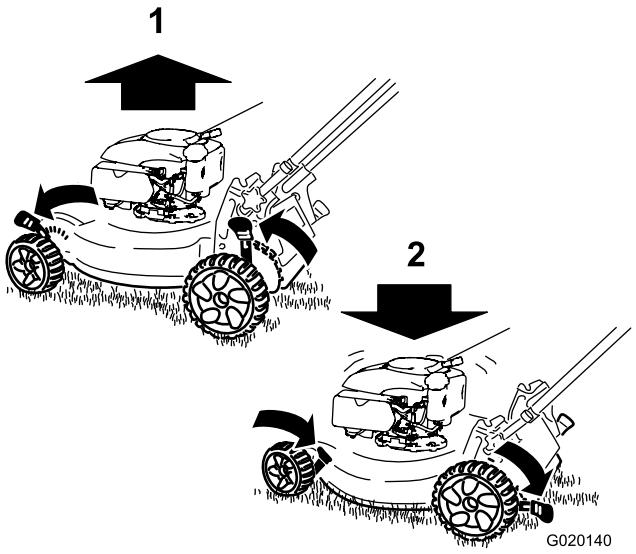

Figure 9

1. Raise the mower
2. Lower the mower

Note: The cutting height settings are 25 mm (1 inch); 38 mm (1-1/2 inch); 51 mm (2 inches); 64 mm (2-1/2 inches); 76 mm (3 inches); 89 mm (3-1/2 inches); and 102 mm (4 inches).

Starting the Engine

1. Hold the blade control bar (Figure 10) against the handle.

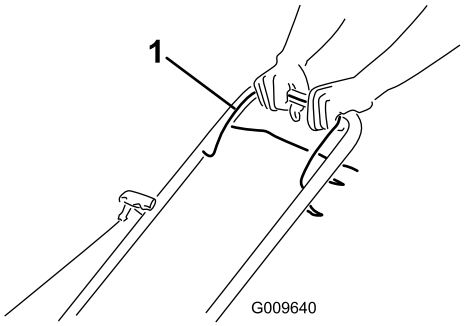

Figure 10

1. Blade control bar

2. Turn the ignition key (Figure 11) or pull the recoil start handle (Figure 12).

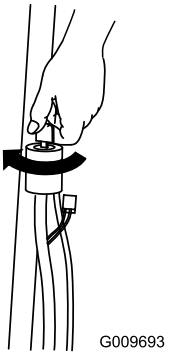

Figure 11

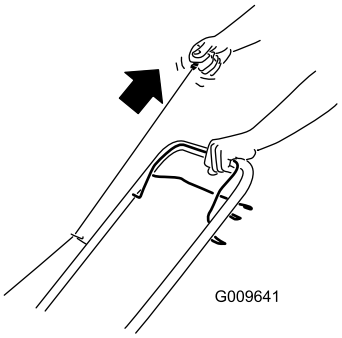

Figure 12

Note: If the machine does not start after several attempts, contact an Authorized Service Dealer.

Using the Self-propel Drive

To operate the self-propel drive, squeeze the self-propel drive bar (Figure 13) toward the handle and hold it.

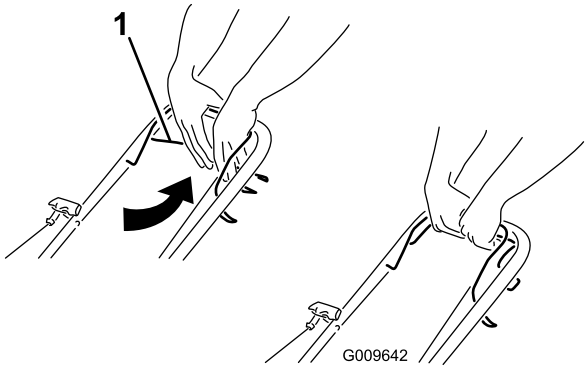

Figure 13

1. Self-propel drive bar

To disengage the self-propel drive, release the self-propel drive bar.

Note: The maximum self-propel ground speed is fixed. To reduce the ground speed, increase the space between the self-propel drive bar and the handle.

Stopping the Engine

Service Interval: Before each use or daily

To stop the engine, release the blade control bar (Figure 14).

Important: When you release the blade control bar, both the engine and blade should stop within 3 seconds. If they do not stop properly, stop using your mower immediately and contact an Authorized Service Dealer.

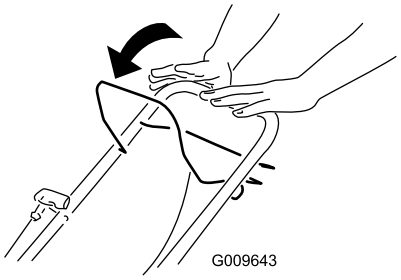

Figure 14

Mulching the Clippings

The machine comes from the factory ready to mulch the grass and leaf clippings back into the lawn.

If the grass bag is on the machine, remove it before mulching the clippings; refer to Removing the Grass Bag (page 10).

Bagging the Clippings

Use the grass bag when you want to collect grass and leaf clippings from the lawn.

⚠ WARNING

A worn grass bag could allow small stones and other similar debris to be thrown in the operator's or bystanders' direction and result in serious personal injury or death to the operator or bystanders.

Check the grass bag frequently. If it is damaged, install a new Toro replacement bag.

⚠ WARNING

The blade is sharp; contacting the blade can result in serious personal injury.

Stop the engine and wait for all moving parts to stop before leaving the operating position.

Installing the Grass Bag

1. Lift up the rear deflector (Figure 15).

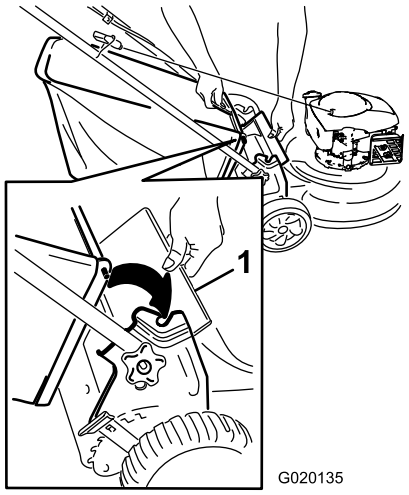

Figure 15

1. Rear deflector

2. Insert the grass bag handle onto the notches on the handle brackets and make sure that it is well seated (Figure 15).

Removing the Grass Bag

1. Lift up the rear deflector (Figure 15).
2. Lift the grass bag handle out from the notches on the handle brackets and remove the bag from the machine.
3. Close the rear deflector.

Discharging the Clippings

Use the rear-discharge deflector for cutting very tall grass.

Installing the Rear-Discharge Deflector

1. If the bag is on the machine, remove it.
2. Lift up the rear deflector and hold it (Figure 16).

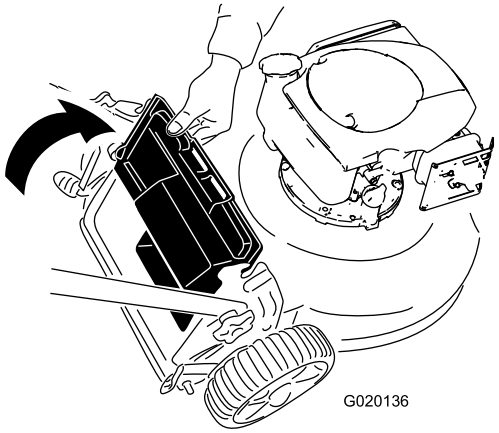

Figure 16

3. Insert the tab on the rear-discharge deflector into the right-hand slot in the rear deflector (Figure 17).

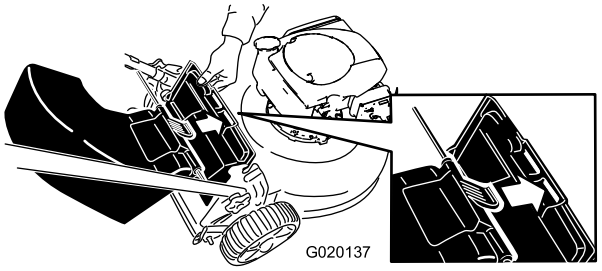

Figure 17

4. Insert the rod on the rear-discharge deflector into the notches on the machine (Figure 18).

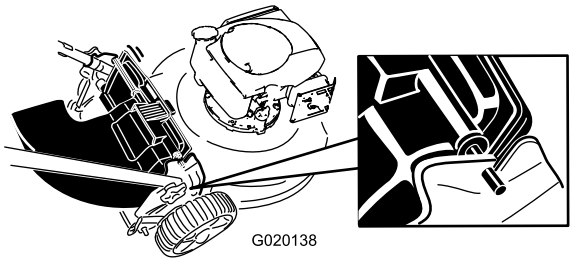

Figure 18

Removing the Rear-Discharge Deflector

To remove the rear-discharge deflector, reverse the steps above.

Operating Tips

General Mowing Tips

- Clear the area of sticks, stones, wire, branches, and other debris that the blade could hit.

- Avoid striking solid objects with the blade. Never deliberately mow over any object.
- If the machine strikes an object or starts to vibrate, immediately stop the engine, disconnect the wire from the spark plug, and examine the machine for damage.
- For best performance, install a new blade before the cutting season begins.
- Replace the blade when necessary with a Toro replacement blade.

Cutting Grass

- Cut only about a third of the grass blade at a time. Do not cut below the 51 mm (2 inch) setting unless the grass is sparse or it is late fall when grass growth begins to slow down. Refer to Adjusting the Cutting Height.
- When cutting grass over 15 cm (6 inches) tall, mow at the highest cutting height setting and walk slower; then mow again at a lower setting for the best lawn appearance. If the grass is too long, the machine may become clogged and cause the engine to stall.
- Mow only dry grass or leaves. Wet grass and leaves tend to clump on the yard and can cause the mower to become clogged or the engine to stall.

⚠ WARNING

Wet grass or leaves can cause serious injury if you slip and contact the blade. Mow only in dry conditions.

- Alternate the mowing direction. This helps disperse the clippings over the lawn for even fertilization.
- If the finished lawn appearance is unsatisfactory, try one or more of the following:
  - Replace the blade or have it sharpened.
  - Walk at a slower pace while mowing.
  - Raise the cutting height on the machine.
  - Cut the grass more frequently.
  - Overlap cutting swaths instead of cutting a full swath with each pass.
  - Set the cutting height on the front wheels one notch lower than the rear wheels. For example, set the front wheels at 51 mm (2 inches) and the rear wheels at 64 mm (2-1/2 inches).

Cutting Leaves

- After cutting the lawn, ensure that half of the lawn shows through the cut leaf cover. You may need to make more than one pass over the leaves.
- If there are more than 13 cm (5 inches) of leaves on the lawn, set the front cutting height one or two notches higher than the rear cutting height.
- Slow down your mowing speed if the machine does not cut the leaves finely enough.

Maintenance

Note: Determine the left and right sides of the machine from the normal operating position.

Recommended Maintenance Schedule(s)

Maintenance Service Interval	Maintenance Procedure
After the first 5 hours	• Change the engine oil.
Before each use or daily	• Check the engine oil level. • Ensure that the engine stops within 3 seconds after releasing the blade control bar. • Clean grass clippings and dirt from under the mower.
Every 25 hours	• Check the air cleaner for dirty, loose, or damaged parts, and clean or replace them if necessary.
Every 50 hours	• Change the engine oil.
Every 100 hours	• Replace the air cleaner element (more frequently when operating the machine in dusty or dirty operating conditions).
Before storage	• Empty the fuel tank before repairs as directed and before annual storage.
Yearly	• Change the engine oil. • Replace the blade or have it sharpened (more frequently if the edge dulls quickly). • Refer to your Engine Operator's Manual for any additional yearly maintenance procedures.

Important: Refer to your *Engine Operator's Manual* for additional maintenance procedures.

Preparing for Maintenance

1. Stop the engine and wait for all moving parts to stop.
2. Disconnect the spark plug wire from the spark plug (Figure 19) before performing any maintenance procedure.

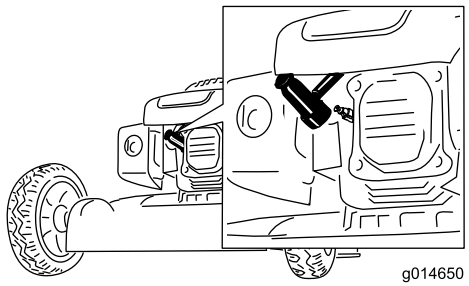

Figure 19

1. Spark plug wire

3. After performing the maintenance procedure(s), connect the spark plug wire to the spark plug.

Important: Before tipping the mower to change the oil or replace the blade, allow the fuel tank to run dry through normal usage. If you must tip the mower prior to running out of fuel, use a hand fuel pump to remove the fuel. Always tip the mower onto its side with the dipstick down.

⚠ WARNING

Tipping the mower may cause the fuel to leak. Gasoline is flammable, explosive and can cause personal injury.

Run the engine dry or remove the gasoline with a hand pump; never siphon.

Servicing the Air Cleaner

Service Interval: Every 25 hours/Yearly (whichever comes first)—Check the air cleaner for dirty, loose, or damaged parts, and clean or replace them if necessary.

Every 100 hours/Yearly (whichever comes first)—Replace the air cleaner element (more frequently when operating the machine in dusty or dirty operating conditions).

1. Perform the pre-maintenance procedures; refer to Preparing for Maintenance (page 12).
2. Press the button on the air cleaner cover (Figure 20) and open the cover.

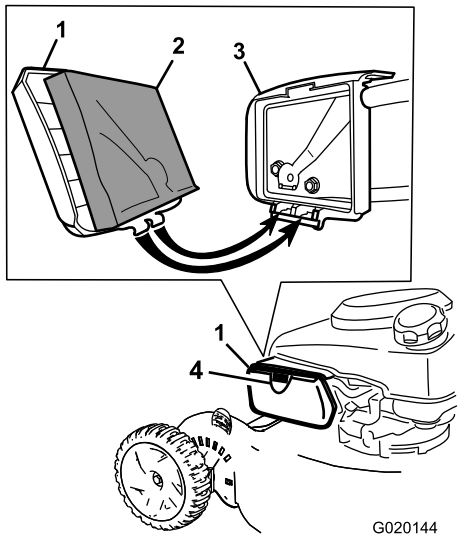

Figure 20

1. Air cleaner cover
2. Air cleaner foam element
3. Air cleaner housing
4. Button

3. Replace the air cleaner element.
4. Install the air cleaner cover.

Changing the Engine Oil

Service Interval: After the first 5 hours

Every 50 hours

Yearly

1. Run the engine a few minutes before changing the oil to warm it.

   Note: Warm oil flows better and carries more contaminants.

2. Perform the pre-maintenance procedures; refer to Preparing for Maintenance (page 12).
3. Tip the machine onto its side, with the dipstick down.
4. Set an oil-drain pan under the dipstick.
5. Remove the dipstick and drain the used oil into an oil-drain pan (Figure 21).

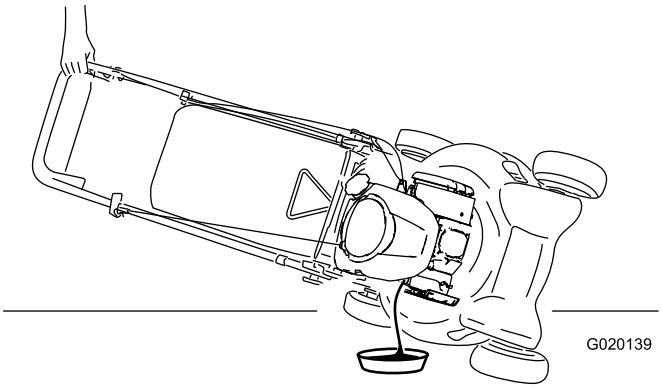

Figure 21

6. After draining the used oil, return the machine to the normal operating position.
7. **Slowly** pour oil into the oil-fill hole until the oil level reaches the Full line on the dipstick (Figure 22). **Do not overfill.** (Max. fill: 0.59 l (20 oz.), type: 10W-30 or SAE 30 detergent oil with an API service classification of SJ or higher.)

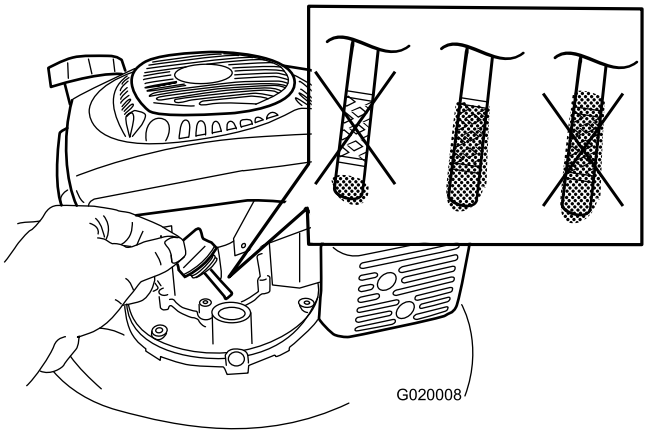

Figure 22

   Note: Each time you check the oil level, remove the dipstick and wipe it clean, insert it into the oil filler neck (but **do not** screw it in), then remove it again and check the oil level on the dipstick.

   Note: If you overfill the engine, drain some of the oil out of the engine crankcase.

8. Install the dipstick securely.
9. Dispose of the used oil properly at a local recycling center.

Charging the Battery

WARNING

CALIFORNIA
Proposition 65 Warning

Battery posts, terminals, and related accessories contain lead and lead compounds, chemicals known to the State of California to cause cancer and reproductive harm. Wash hands after handling.

Charge the battery for 24 hours initially, then monthly (every 25 starts) or as needed. Always use the charger in a sheltered area and charge the battery at room temperature (22° C or 70° F) whenever possible.

1. Connect the charger to the mower wire harness located below the ignition key (Figure 23).

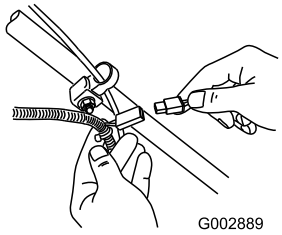

Figure 23

2. Plug the charger in to a wall outlet.

   Note: When the battery no longer holds a charge, recycle or dispose of the lead-acid battery according to local codes.

Replacing the Fuse

Your mower comes with a fuse that protects the electric starter. If the battery does not charge or the engine does not run with the electric starter, the fuse may be blown. Replace it with a 40-amp plug-in type fuse.

Important: You cannot start the mower with the electric starter or charge the battery unless you install the fuse.

1. Unclip both ends of the battery cover and remove it (Figure 24).

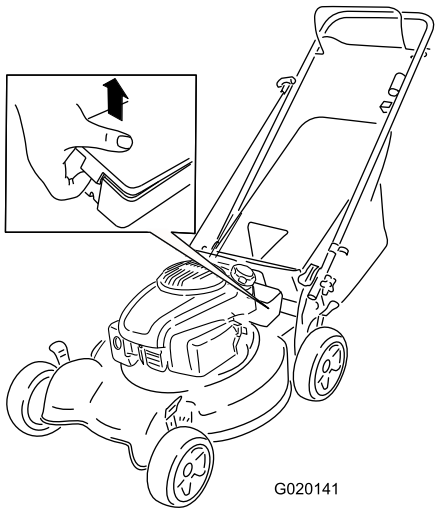

Figure 24

2. Insert the fuse into the fuse holder (Figure 25).

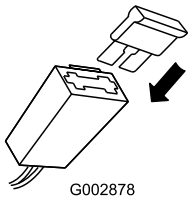

Figure 25

3. Install the battery cover.

Replacing the Blade

Service Interval: Yearly

Important: ***You will need a torque wrench to install the blade properly.*** **If you do not have a torque wrench or are uncomfortable performing this procedure, contact an Authorized Service Dealer.**

Examine the blade whenever you run out of gasoline. If the blade is damaged or cracked, replace it immediately. If the blade edge is dull or nicked, have it sharpened or replace it.

⚠ WARNING

The blade is sharp; contacting the blade can result in serious personal injury.

Wear gloves when servicing the blade.

1. Disconnect the spark plug wire from the spark plug. Refer to Preparing for Maintenance.
2. Tip the mower onto its side, with the air filter up.
3. Use a block of wood to hold the blade steady.
4. Remove the blade (turn the blade bolt counterclockwise), saving all the mounting hardware.
5. Install the new blade (turn the blade bolt clockwise) and all mounting hardware (Figure 26).

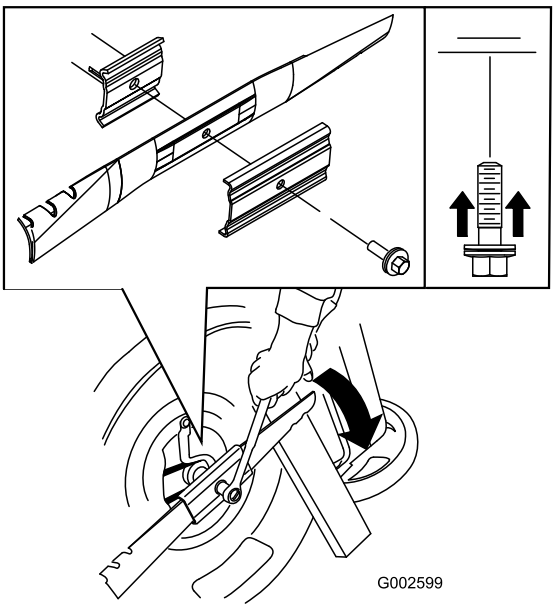

Figure 26

Important: **Position the curved ends of the blade to point toward the mower housing.**

6. **Use a torque wrench to tighten the blade bolt to 82 N-m (60 ft-lb).**

   Important: A bolt torqued to 82 N-m (60 ft-lb) is very tight. While holding the blade with a block of wood, put your weight behind the ratchet or wrench and tighten the bolt securely. This bolt is very difficult to overtighten.

Adjusting the Self-propel Drive Cable

Whenever you install a new self-propel cable or if the self-propel drive is out of adjustment, adjust the self-propel drive cable.

1. Loosen the cable support nut (Figure 27).

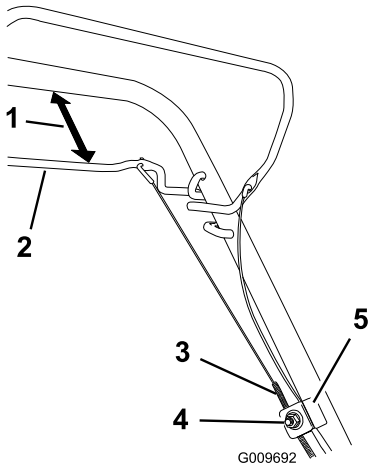

Figure 27

1. 25 to 38 mm (1 to 1-1/2 inches)
2. Self-propel drive bar
3. Cable jacket
4. Cable support nut
5. Cable support

2. Hold the self-propel drive bar 25 to 38 mm (1 to 1-1/2 inches) from the handle (Figure 27).
3. Pull down the cable jacket (toward the mower) until there is no slack in the cable (Figure 27).
4. Tighten the nut on the cable support.
5. Release the self-propel drive bar and ensure that the cable is loose.

   Note: The cable must be loose with the self-propel drive bar in the released position; otherwise, the mower may creep when the bar is disengaged.

Cleaning the Mower

Service Interval: Before each use or daily

⚠ WARNING

The mower may dislodge material from under the mower housing.

- **Wear eye protection.**
- **Stay in the operating position (behind the handle).**
- **Do not allow bystanders in the area.**

1. With the engine running on a flat paved surface, spray a stream of water in front of the **right** rear wheel (Figure 28).

   The water will splash into the path of the blade, cleaning out the clippings.

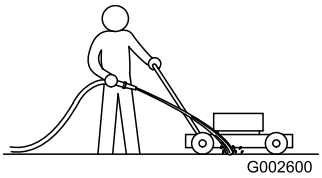

Figure 28

2. When no more clippings come out, stop the water and move the mower to a dry area.
3. Run the engine for a few minutes to dry the housing to prevent it from rusting.

Storage

Store the mower in a cool, clean, dry place.

Preparing the Mower for Storage

⚠ WARNING

Gasoline vapors can explode.

- **Do not store gasoline more than 30 days.**
- **Do not store the mower in an enclosure near an open flame.**
- **Allow the engine to cool before storing it.**

1. On the last refueling of the year, add fuel stabilizer to the fuel as directed by the engine manufacturer.
2. Run the mower until the engine stops from running out of fuel.
3. Prime the engine and start it again.
4. Allow the engine to run until it stops. When you can no longer start the engine, it is sufficiently dry.
5. Disconnect the wire from the spark plug and connect the wire onto the retaining post.
6. Remove the spark plug, add 30 ml (1 oz.) of oil through the spark plug hole, and pull the starter rope **slowly** several times to distribute oil throughout the cylinder to prevent cylinder corrosion during the off-season.
7. Install the spark plug and tighten it with a torque wrench to 20 N-m (15 ft-lb).
8. Tighten all nuts, bolts, and screws.
9. Charge the battery for 24 hours, then unplug the battery charger and store the mower in an unheated area. If you must store the mower in a heated area, you must charge the battery every 90 days.

Folding the Handle

⚠ WARNING

Folding or unfolding the handle improperly can damage the cables, causing an unsafe operating condition.

- **Do not damage the cables when folding or unfolding the handle.**
- **If a cable is damaged, contact an Authorized Service Dealer.**

1. Loosen the handle knobs until you can move the handle freely (Figure 29).

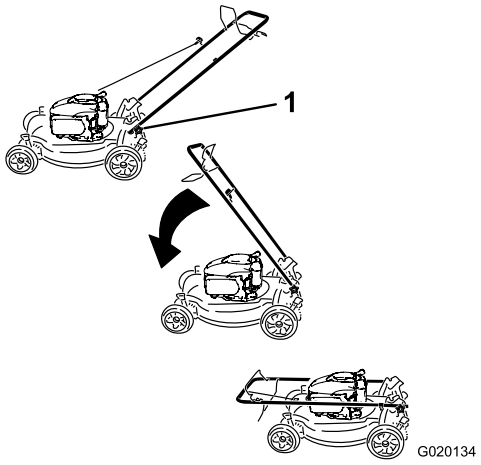

Figure 29

1. Handle knob (2)

2. Move the handle forward as shown in Figure 29.

Removing the Mower from Storage

1. Charge the battery for 24 hours.
2. Connect the wire to the spark plug.

Troubleshooting

Problem	Possible Cause	Corrective Action
The engine does not start.	1. The wire is not connected to the spark plug.	1. Connect the wire to the spark plug.
	2. The fuel cap vent hole is plugged.	2. Clean the fuel cap vent hole or replace the fuel cap.
	3. The spark plug is pitted, fouled, or incorrectly gapped .	3. Check the spark plug and adjust the gap if necessary. Replace the spark plug if it is pitted, fouled, or cracked.
	4. The fuel tank is empty or the fuel system contains stale fuel.	4. Drain and/or fill the fuel tank with fresh gasoline. If the problem persists, contact an Authorized Service Dealer.
The engine starts hard or loses power.	1. The fuel cap vent hole is plugged.	1. Clean the fuel cap vent hole or replace the fuel cap.
	2. The air filter element is dirty and is restricting the air flow.	2. Clean the air filter pre-cleaner and/or replace the paper air filter.
	3. The underside of the machine contains clippings and debris.	3. Clean under the machine.
	4. The spark plug is pitted, fouled, or incorrectly gapped .	4. Check the spark plug and adjust the gap if necessary. Replace the spark plug if it is pitted, fouled, or cracked.
	5. The engine oil level is too low, too high, or excessively dirty.	5. Check the engine oil. Change the oil if it is dirty; add or drain the oil to adjust the oil level to the Full mark on the dipstick.
	6. The fuel tank contains stale fuel.	6. Drain and fill the fuel tank with fresh gasoline.
The engine runs rough.	1. The wire is not connected to the spark plug.	1. Connect the wire to the spark plug.
	2. The air filter element is dirty and is restricting the air flow.	2. Clean the air filter pre-cleaner and/or replace the paper air filter.
	3. The spark plug is pitted, fouled, or incorrectly gapped .	3. Check the spark plug and adjust the gap if necessary. Replace the spark plug if it is pitted, fouled, or cracked.
The machine or engine vibrates excessively.	1. The underside of the machine housing contains clippings and debris.	1. Clean under the machine housing.
	2. The engine mounting bolts are loose.	2. Tighten the engine mounting bolts.
	3. The blade mounting nuts are loose.	3. Tighten the blade mounting nuts.
	4. The blade is bent or is out of balance.	4. Balance the blade. If the blade is bent, replace it.
There is an uneven cutting pattern.	1. You are mowing in the same pattern repeatedly.	1. Change the mowing pattern.
	2. All 4 wheels are not at the same height.	2. Place all 4 wheels at the same height.
	3. The underside of the machine housing contains clippings and debris.	3. Clean under the machine housing.
	4. The blade is dull.	4. Sharpen and balance the blade.
The machine does not self-propel.	1. There is debris under the belt cover.	1. Clean the debris from under the belt cover.
	2. The self-propel drive cable is out of adjustment or is damaged.	2. Adjust the self-propel drive cable. Replace the cable if necessary.

Notes:

International Distributor List

Distributor:	Country:	Phone Number:	Distributor:	Country:	Phone Number:
Agrolanc Kft	Hungary	36 27 539 640	Maquiver S.A.	Colombia	57 1 236 4079
Balama Prima Engineering Equip.	Hong Kong	852 2155 2163	Maruyama Mfg. Co. Inc.	Japan	81 3 3252 2285
B-Ray Corporation	Korea	82 32 551 2076	Mountfield a.s.	Czech Republic	420 255 704 220
Casco Sales Company	Puerto Rico	787 788 8383	Mountfield a.s.	Slovakia	420 255 704 220
Ceres S.A.	Costa Rica	506 239 1138	Munditol S.A.	Argentina	54 11 4 821 9999
CSSC Turf Equipment (pvt) Ltd.	Sri Lanka	94 11 2746100	Norma Garden	Russia	7 495 411 61 20
Cyril Johnston & Co.	Northern Ireland	44 2890 813 121	Oslinger Turf Equipment SA	Ecuador	593 4 239 6970
Cyril Johnston & Co.	Republic of Ireland	44 2890 813 121	Oy Hako Ground and Garden Ab	Finland	358 987 00733
Equiver	Mexico	52 55 539 95444	Parkland Products Ltd.	New Zealand	64 3 34 93760
Femco S.A.	Guatemala	502 442 3277	Perfetto	Poland	48 61 8 208 416
ForGarder OU	Estonia	372 384 6060	Pratoverde SRL.	Italy	39 049 9128 128
G.Y.K. Company Ltd.	Japan	81 726 325 861	Prochaska & Cie	Austria	43 1 278 5100
Geomechaniki of Athens	Greece	30 10 935 0054	RT Cohen 2004 Ltd.	Israel	972 986 17979
Golf international Turizm	Turkey	90 216 336 5993	Riversa	Spain	34 9 52 83 7500
Guandong Golden Star	China	86 20 876 51338	Lely Turfcare	Denmark	45 66 109 200
Hako Ground and Garden	Sweden	46 35 10 0000	Solvert S.A.S.	France	33 1 30 81 77 00
Hako Ground and Garden	Norway	47 22 90 7760	Spypros Stavrinides Limited	Cyprus	357 22 434131
Hayter Limited (U.K.)	United Kingdom	44 1279 723 444	Surge Systems India Limited	India	91 1 292299901
Hydroturf Int. Co Dubai	United Arab Emirates	97 14 347 9479	T-Markt Logistics Ltd.	Hungary	36 26 525 500
Hydroturf Egypt LLC	Egypt	202 519 4308	Toro Australia	Australia	61 3 9580 7355
Irrimac	Portugal	351 21 238 8260	Toro Europe NV	Belgium	32 14 562 960
Irrigation Products Int'l Pvt Ltd.	India	0091 44 2449 4387	Valtech	Morocco	212 5 3766 3636
Jean Heybroek b.v.	Netherlands	31 30 639 4611	Victus Emak	Poland	48 61 823 8369

European Privacy Notice

The Information Toro Collects
Toro Warranty Company (Toro) respects your privacy. In order to process your warranty claim and contact you in the event of a product recall, we ask you to share certain personal information with us, either directly or through your local Toro company or dealer.

The Toro warranty system is hosted on servers located within the United States where privacy law may not provide the same protection as applies in your country.

BY SHARING YOUR PERSONAL INFORMATION WITH US, YOU ARE CONSENTING TO THE PROCESSING OF YOUR PERSONAL INFORMATION AS DESCRIBED IN THIS PRIVACY NOTICE.

The Way Toro Uses Information
Toro may use your personal information to process warranty claims, to contact you in the event of a product recall and for any other purpose which we tell you about. Toro may share your information with Toro's affiliates, dealers or other business partners in connection with any of these activities. We will not sell your personal information to any other company. We reserve the right to disclose personal information in order to comply with applicable laws and with requests by the appropriate authorities, to operate our systems properly or for our own protection or that of other users.

Retention of your Personal Information
We will keep your personal information as long as we need it for the purposes for which it was originally collected or for other legitimate purposes (such as regulatory compliance), or as required by applicable law.

Toro's Commitment to Security of Your Personal Information
We take reasonable precautions in order to protect the security of your personal information. We also take steps to maintain the accuracy and current status of personal information.

Access and Correction of your Personal Information
If you would like to review or correct your personal information, please contact us by email at legal@toro.com.

Australian Consumer Law

Australian customers will find details relating to the Australian Consumer Law either inside the box or at your local Toro Dealer.

The Toro Warranty and The Toro GTS Starting Guarantee

Conditions and Products Covered

The Toro Company and its affiliate, Toro Warranty Company, pursuant to an agreement between them, jointly promise to repair for the original purchaser[1]the Toro Product listed below if defective in materials or workmanship or if the Toro GTS (Guaranteed to Start) engine will not start on the first or second pull, provided the routine maintenance required in the *Operator's Manual* have been performed.

The following time periods apply from the date of purchase:

Products	Warranty Period
Walk Power Mowers	
• Cast Deck	5 years Residential Use[2] 90 Days Commercial Use
• Engine	5 years GTS Guarantee, Residential Use[3]
• Battery	2 years
• Steel Deck	2 years Residential Use[2] 30 Days Commercial Use
• Engine	2 years GTS Guarantee, Residential Use[3]
TimeMaster Mowers	3 years Residential Use[2] 90 Days Commercial Use
• Engine	3 years GTS Guarantee, Residential Use[3]
• Battery	2 years
Electric Hand Held Products	2 years Residential Use[2] No Warranty for Commercial Use
Snowthrowers	
• Single Stage	2 years Residential Use[2] 45 Days Commercial Use
• Engine	2 years GTS Guarantee, Residential Use[3]
• Two Stage	3 years Residential Use[2] 45 Days Commercial Use
• Chute, chute deflector and impeller housing cover	Lifetime (original owner only)[5]
Electric Snowthrowers	2 years Residential Use[2] No Warranty for Commercial Use
All Ride-On Units Below	
• Engine	See engine manufacturer's warranty[4]
• Battery	2 years Residential Use[2]
• Attachments	2 years Residential Use[2]
DH Lawn & Garden Tractors	2 years Residential Use[2] 30 Days Commercial Use
XLS Lawn & Garden Tractors	3 years Residential Use[2] 30 Days Commercial Use
TimeCutter	3 years Residential Use[2] 30 Days Commercial Use
TITAN Mowers	3 years or 240 hours[5]
• Frame	Lifetime (original owner only)[6]

[1]Original Purchaser means the person who originally purchased the Toro Product.

[2]Residential use means use of the product on the same lot as your home. Use at more than one location is considered commercial use and the commercial use warranty would apply.

[3]The Toro GTS Starting Guarantee does not apply when the product is used commercially.

[4]Some engines used on Toro Products are warranted by the engine manufacturer.

[5]Whichever occurs first.

[6]Lifetime Frame Warranty - If the main frame, consisting of the parts welded together to form the tractor structure that other components such as the engine are secured to, cracks or breaks in normal use, it will be repaired or replaced, at Toro's option, under warranty at no cost for parts and labor. Frame failure due to misuse or abuse and failure or repair required due to rust or corrosion are not covered.

Warranty may be denied if the hour meter is disconnected, altered, or shows signs of being tampered with.

Owner Responsibilities

You must maintain your Toro Product by following the maintenance procedures described in the *Operator's Manual*. Such routine maintenance, whether performed by a dealer or by you, is at your expense.

Instructions for Obtaining Warranty Service

If you think that your Toro Product contains a defect in materials or workmanship, follow this procedure:

1. Contact your seller to arrange service of the product. If for any reason it is impossible for you to contact your seller, you may contact any Toro Authorized Distributor to arrange service. See attached Distributor List.
2. Bring the product and your proof of purchase (sales receipt) to the servicing outlet. If for any reason you are dissatisfied with the servicing outlet's analysis or with the assistance provided, contact us at:

   Toro Customer Care Department, RLC Division
   Toro Warranty Company
   8111 Lyndale Avenue South
   Bloomington, MN 55420-1196
   001–952–948–4707

Items and Conditions Not Covered

There is no other express warranty except for special emission system coverage and engine warranty coverage on some products. This express warranty does not cover the following:

- Cost of regular maintenance service or parts, such as filters, fuel, lubricants, oil changes, spark plugs, air filters blade sharpening or worn blades, cable/linkage adjustments, or brake and clutch adjustments
- Components failing due to normal wear
- Any product or part which has been altered or misused or neglected and requires replacement or repair due to accidents or lack of proper maintenance
- Pickup and delivery charges
- Repairs or attempted repairs by anyone other than an Authorized Toro Service Dealer
- Repairs necessary due to failure to follow recommended fuel procedure (consult *Operator's Manual* for more details)
  - Removing contaminants from the fuel system is not covered
  - Use of old fuel (more than one month old) or fuel which contains more than 10% ethanol or more that 15% MTBE
  - Failure to drain the fuel system prior to any period of non-use over one month
- Repairs or adjustments to correct starting difficulties due to the following:
  - Failure to follow proper maintenance procedures or recommended fuel procedure
  - Rotary mower blade striking an object
- Special operational conditions where starting may require more than two pulls:
  - First time starts after extended period of non-use over three months or seasonal storage
  - Cool temperature starts such as those found in early spring and late autumn
  - Improper starting procedures - if you are having difficulty starting your unit, please check the *Operator's Manual* to ensure that you are using the correct starting procedures. This can save an unnecessary visit to an Authorized Toro Service Dealer.

General Conditions

The purchaser is covered by the national laws of each country. The rights to which the purchaser is entitled with the support of these laws are not restricted by this warranty.